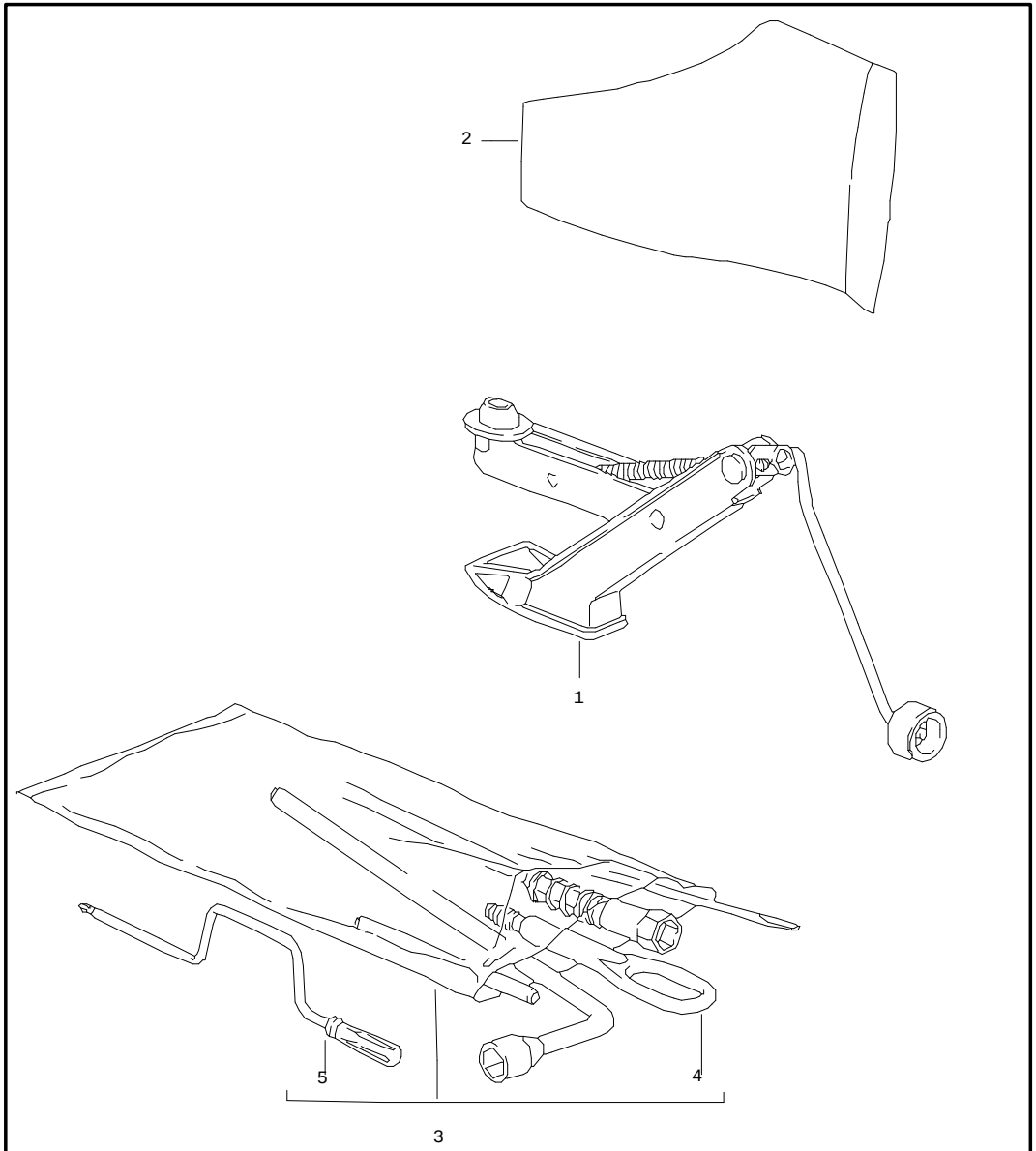

Pos	Part Number	Name	Remarks	Qty	Model
		tool jack			
1	928 721 011 03	jack		1	
(1)	000 721 711 01	jack		1	(AUS)
2	928 551 093 02	bag for jack		1	
3	-	tool set comprising:		1	
-	477 012 233	spark plug wrench		1	
-	999 571 045 02	rim wrench		1	
-	999 195 011 02	double-end spanner 8 X 9		1	
-	999 195 012 02	double-end spanner 10 X 11		1	
-	999 195 013 02	double-end spanner 12 X 13		1	
-	999 195 014 02	double-end spanner 14 X 15		1	
-	999 195 015 02	double-end spanner 17 X 19		1	
-	911 721 107 02	screw driver		1	
-	911 721 107 02	screw driver for cross-recess screw		1	
-	911 721 107 02	screw driver for slotted screw		1	
-	999 107 006 02	universal pliers		1	
4	928 722 101 05	towing lug		X	
5	928 521 907 02	crank		1	
6	911 721 237 00	intermediate piece for emergency control power windows		1	

Model	Year	MG	SG	Illustration	Restrictions	Update				
928	91	0	01	1-00		179	15:26	02.09.2004	PORSCHE	PET	PORSCHE

Pos	Part Number	Name	Remarks	Qty	Model	Pos	Part Number	Name	Remarks	Qty	Model
		- -- E N D -- -									

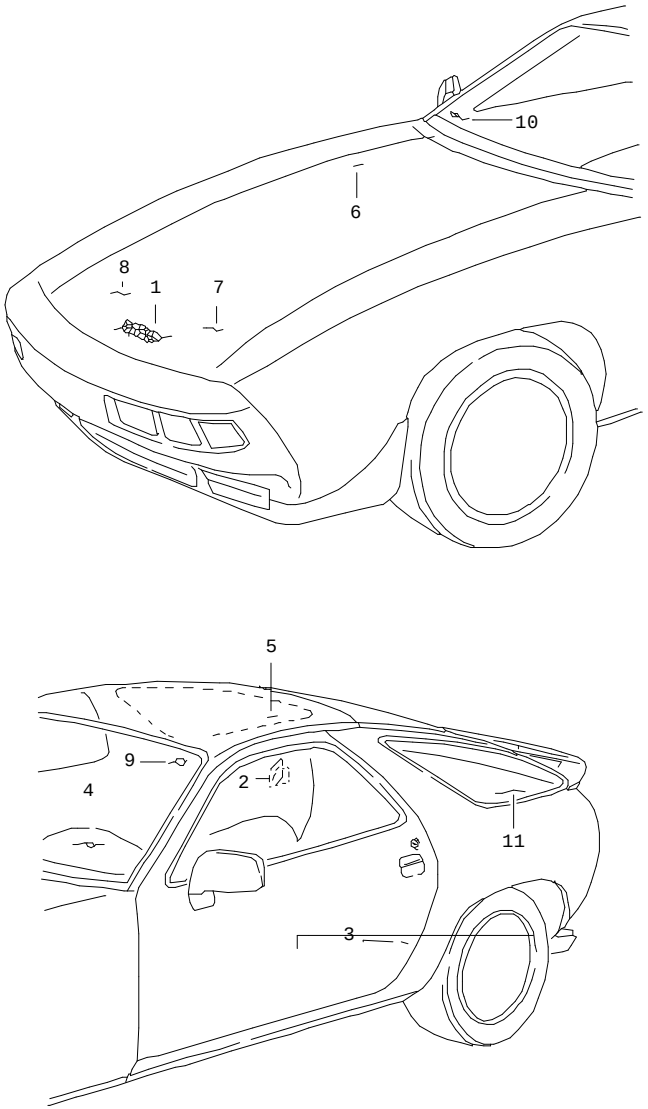

Pos	Part Number	Name	Remarks	Qty	Model
		stickers			
1	928 006 101 53	sticker engine specifications	87	1	(S)
(1)	928 006 101 53	sticker engine specifications	88	1	(S)
(1)	928 006 101 59	sticker engine specifications	89	1	(S)
(1)	928 006 101 71	sticker engine specifications	90-	1	(S) M 249
(1)	928 006 101 72	sticker engine specifications	90-	1	(S) M 481
(1)	928 006 101 54	sticker engine specifications	87	1	(AUS)
(1)	928 006 101 54	sticker engine specifications	88	1	(AUS)
(1)	928 006 101 60	sticker engine specifications	89	1	(AUS)
(1)	928 006 119 05	sticker engine specifications		1	(CH)
2	928 006 117 07	sticker octane rating	87	1	(S)
(2)	928 006 117 07	sticker octane rating	88-	1	(S)
(2)	928 006 117 03	sticker type of fuel unleaded		1	M 298/299 (NL)(CH)(A)
(2)	U 928 701 117 12	sticker type of fuel	90-	1	(F)
(2)	U 928 701 117 10	sticker type of fuel	90-	1	(I)
(2)	U 928 701 117 11	sticker type of fuel	90-	1	(E)
(2)	U 928 701 117 08	sticker type of fuel	90-	1	(GB)
(2)	928 006 117 01	sticker octane number leaded fuel		1	(NL)(D)

Pos	Part Number	Name	Remarks	Qty	Model
(2)	928 006 101 79	sticker engine specifications	90-	1	(AUS) M 249
(2)	928 006 101 80	sticker engine specifications	90-	1	(AUS) M 481
(2)	930 701 203 01	sticker octane number		1	(J)
(2)	928 006 518 01	sticker tyre pressure	-88	1	
(2)	928 006 516 02	sticker tyre pressure	-88	1	(AUS)
(2)	928 701 287 05	sticker for tyre pressure monit. sys.	89-	1	
(2)	928 701 287 06	sticker for tyre pressure monit. sys.	89-	1	(GB)
(2)	928 701 287 07	sticker for tyre pressure monit. sys.	89-	1	(F)
(2)	928 701 287 08	sticker for tyre pressure monit. sys.	89-	1	(J)
(2)	928 701 287 09	sticker for tyre pressure monit. sys.	89-	1	(E)
(2)	928 701 287 11	sticker for tyre pressure monit. sys.	89	1	(AUS)
(2)	928 701 287 12	sticker for tyre pressure monit. sys.	89	1	(AUS) M 639
(2)	928 701 287 11	sticker tyre pressure monit. sys.	90-	1	(AUS) M 395
(2)	928 701 287 13	sticker tyre pressure monit. sys.	90-	1	(AUS) M 400
(2)	928 006 117 04	sticker octane number	-89	1	(AUS)
4	928 701 173 02	sticker unleaded		1	(AUS)(J)
(4)	928 701 173 04	sticker unleaded	-89	1	(S)
-	928 701 173 03	sticker unleaded EUROSUPER	-89	1	(F)(B)(L)
(4)	928 701 173 06	sticker unleaded	90-	1	(S)
(4)	944 701 210 02	sticker unleaded EUROSUPER	-89	1	(NL)(S)(A) (D) (D)
5	477 000 258	sticker unleaded		1	(AUS)(J)
(5)	944 701 201 03	sticker unleaded		1	(NL)(S)(A) (D)
(5)	928 701 171 02	sticker unleaded		1	(F)(B)(L)
(5)	944 701 201 05	sticker unleaded		1	(S)
6	928 006 511 01	sticker coolant		1	
6	928 006 511 00	sticker coolant		1	(F)
7	964 701 163 00	sticker high voltage		1	
(7)	928 006 105 03	sticker firing order		1	
8	928 006 101 54	sticker engine specifications	-89	1	(AUS)
9	928 701 102 02	indication sticker sekuriflex	-90	1	(NL)(S)(A) (D)(CH)
(9)	928 701 102 06	indication sticker sekuriflex	-90	1	(SA)(GB)(AUS (J)
(9)	928 701 102 03	indication sticker sekuriflex	-90	1	(F)
(9)	928 701 102 04	indication sticker sekuriflex	-90	1	(I)

Pos	Part Number	Name	Remarks	Qty	Model
(9)	928 701 102 05	indication sticker sekuriflex	-90	1	(E)
11	911 701 250 00	sticker alarm system		1	
		- -- E N D -- -			

Pos	Part Number	Name	Remarks	Qty	Model

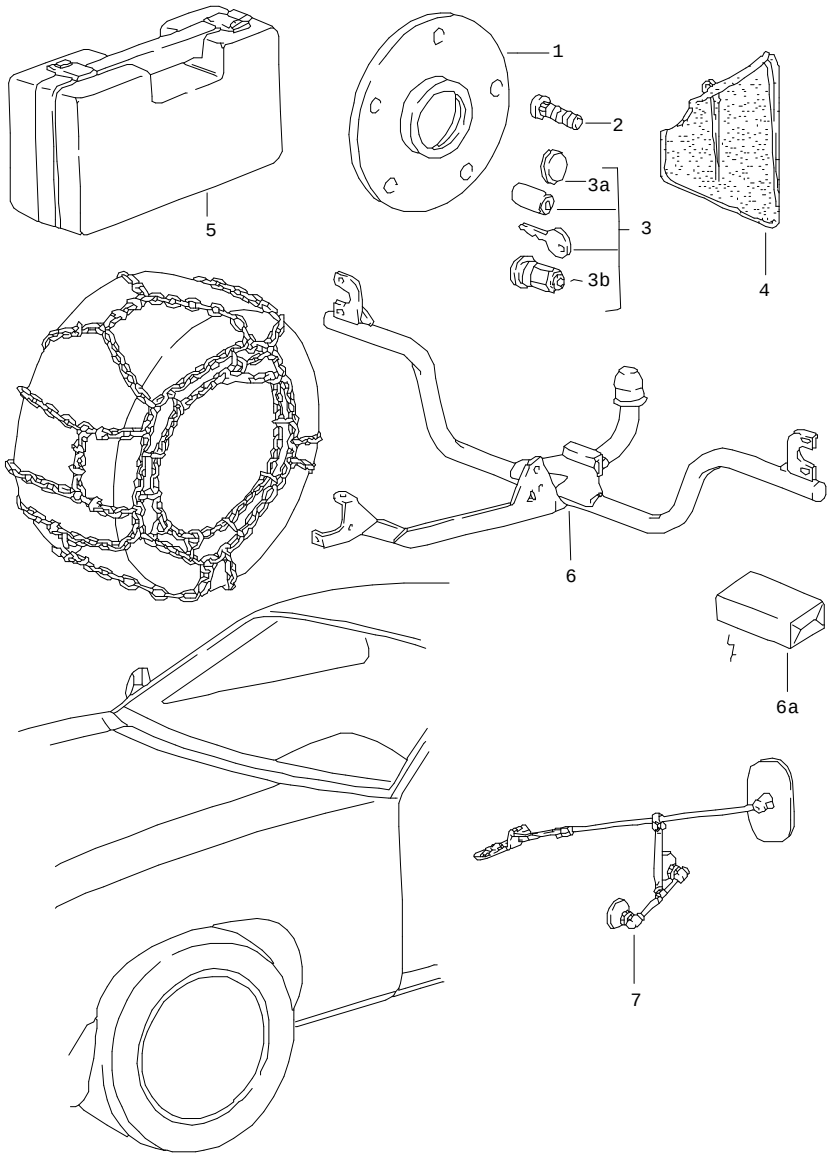

Pos	Part Number	Name	Remarks	Qty	Model
		accessories			
		widening of track for rear axle see technical information GR.X 5			
1	477 501 701	spacer tube 21 MM		2	
2	901 331 671 01	wheel bolt		10	
3	928 361 047 03	wheel nut 1 set lockable		1	
3A	928 361 310 00	cap wheel nut		X	
3B	928 361 306 03	wheel nut lockable without lock		4	
		snow chains			
5	911 361 909 00	snow chains RINGMATIC for tyre 185/70 R 15 215/60 R 15 205/55 R 16 225/50 R 16		1	
6	928 722 003 00	trailer coupling with electric installation set		1	
6A	928 612 905 01	electric installation set	85-	1	
7	928 731 051 02	outside mirror for caravan	/L	1	
(7)	928 731 052 02	outside mirror for caravan	/R	1	
-	911 361 510 03	small electric compressor		1	
-	911 722 201 02	tyre pressure gauge		1	
		vertical pedal adjustment see group 7/02/00 + 7/02/05			

Pos	Part Number	Name	Remarks	Qty	Model	Pos	Part Number	Name	Remarks	Qty	Model
-	000 043 079 00	floor mat rubber set front floor mats front see group 8/07/05 - -- E N D -- -		1							

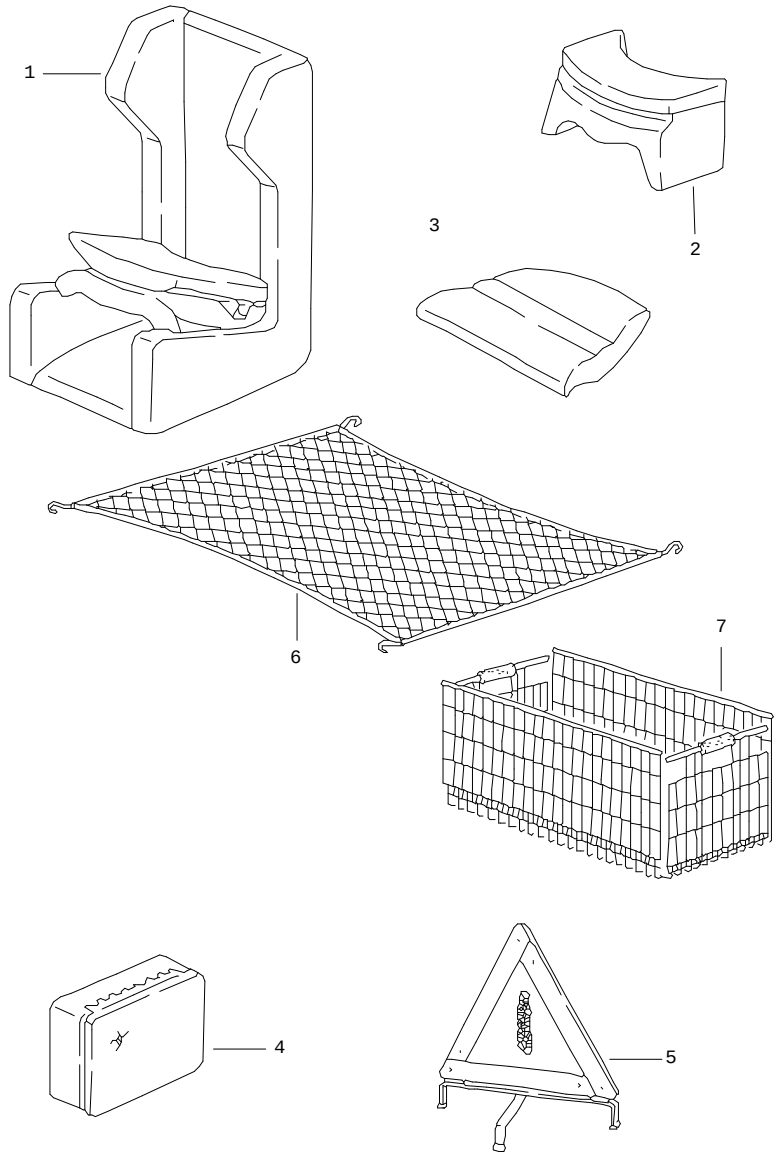

Pos	Part Number	Name	Remarks	Qty	Model
		accessories			
1	944 522 051 01	child car seat up to 4 years		1	
2	928 522 050 00	child car seat older than 4 years only together with child car seat cushion		1	
3	928 522 159 02	child car seat cushion porsche lettering cloth	/L	1	
	4CR	black			
(3)	928 522 160 02	child car seat cushion porsche lettering cloth	/R	1	
	4CR	black			
(5)	911 721 104 01	warning triangle		1	(D)
6	928 555 631 02	luggage net		1	
7	000 043 002 00	car basket to be folded		X	
		- -- E N D -- -			

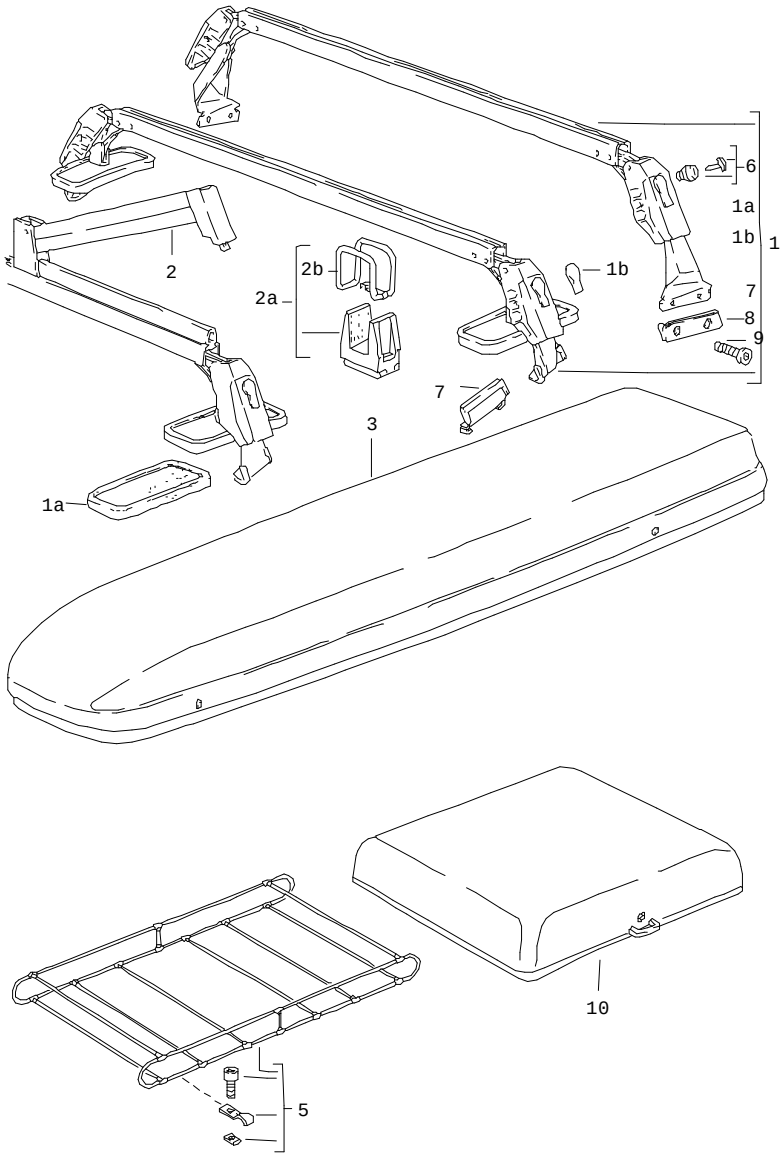

Pos	Part Number	Name	Remarks	Qty	Model
		roof transport system			
1	928 801 055 02	set of main supports		1	
1A	928 801 267 02	rubber plate		2	
1B	928 801 111 02	protection cap		4	
2	928 801 061 02	retaining strip set		4	
2A	928 801 903 02	rubber support for skis 1 set		1	
2B	928 801 193 02	retaining strap 1 set		1	
3	928 801 063 02	ski box	/L	1	
(3)	928 801 064 02	ski box	/R	1	
5	928 801 081 02	roof luggage rack		1	
6	928 801 011 02	cylinder lock spring clamp with keys state lock number		4	
7	928 801 271 02	protective rubber		2	
8	928 801 167 02	protective rubber		2	
9	900 119 072 00	pan-head screw M 8 X 18		4	
10	928 801 073 02	box for suitcase		1	
		- -- E N D -- -			

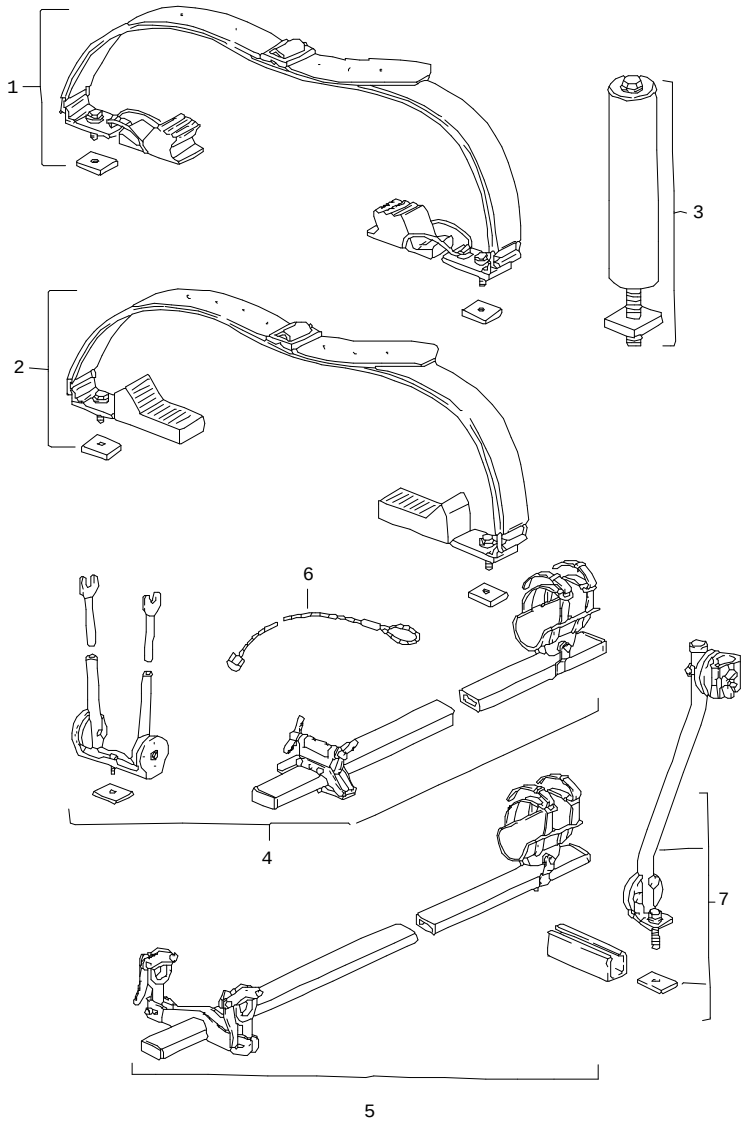

Pos	Part Number	Name	Remarks	Qty	Model
		roof transport system			
1	928 801 019 02	set of surf board supports		1	
2	928 801 017 02	set - canoe carrier		1	
3	928 801 085 02	ladder support mandrel set		1	
4	928 801 093 02	set - bike carrier racing bike		1	
5	928 801 095 02	set - bike carrier standard bike		1	
6	928 801 079 02	safety rope		1	
7	928 801 097 02	support for bicycle		1	
		- -- E N D -- -			

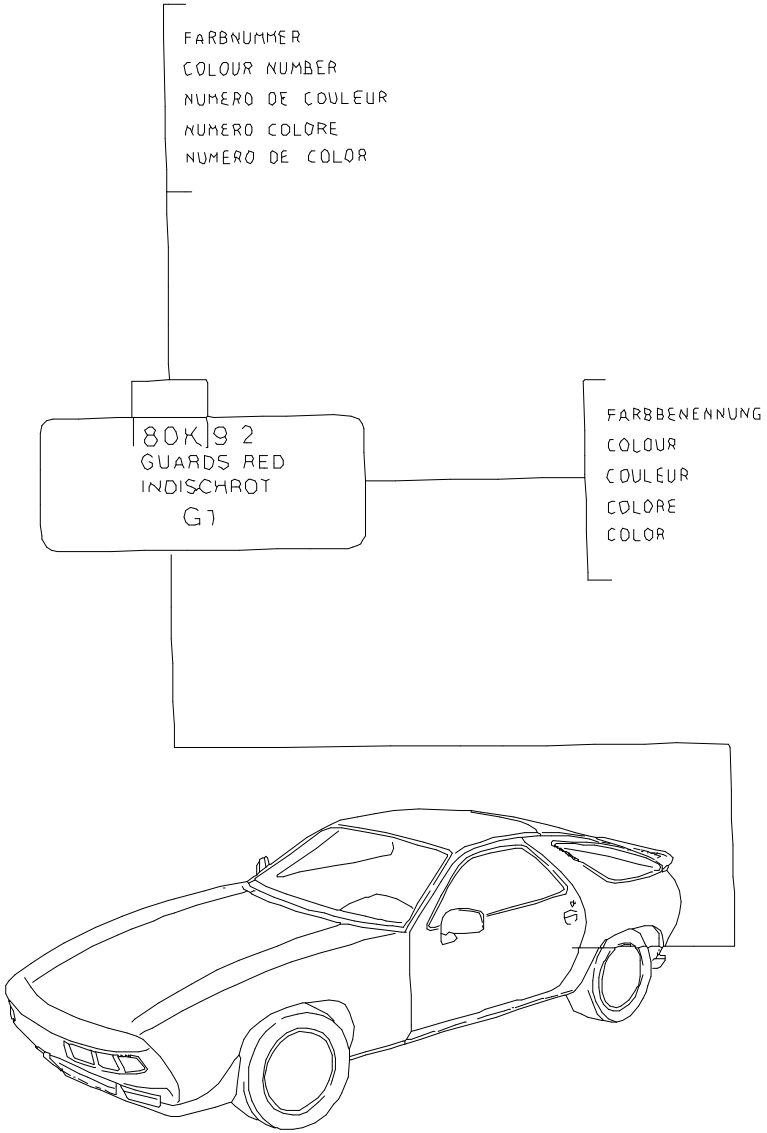

Pos	Part Number	Name	Remarks	Qty	Model
		lacquers basic materials			
-	911 096 050 00	polyester filler 1 KG. GLASSIT-NON-FERRO 839-10		X	
-	911 096 051 00	hardener 30 GR. GLASSIT 948-36 red		X	
-	911 096 052 00	primer filler 1LTR. GLASSOFIX 238-150		X	
-	911 096 053 00	hardener 500 ML. GLASSOFIX 352-228		X	
-	911 096 054 00	primer filler 1 LTR. GLASSODUR 285-100 white		X	
-	911 096 055 00	hardener 500 ML. GLASSODUR 929-28/1		X	
-	911 096 056 00	wash primer 2 LTR. GLASSOFIX 2K 934-200		X	
-	911 096 057 00	hardener 1 LTR. GLASSOFIX 934-100		X	
-	911 096 058 00	polyurethane plastic putty 1 KG. GLASSODUR 995-20		X	
-	911 096 059 00	hardener 1 KG. GLASSODUR 929-13		X	
-	911 096 060 00	thinner 1 KG. GLASSODUR 352-91		X	
-	911 096 062 00	additional lacquer 1 LTR. GLASSODUR 521-111		X	

Pos	Part Number	Name	Remarks	Qty	Model
-	911 096 063 00	underbody protection 1 KG. GLASSOHYD 1109-		X	
-	000 043 001 00	tin SN 90% CA. 200 G		X	
-	911 095 903 80	synthetic resin prime coat metallic 1 LTR.		X	
	80D	cassis red metallic			80D
	697	diamond-blue metallic			697
	40D	espresso brown metallic			40D
	699	granite green metallic			699
	35Y	lagoon green metallic			35Y
	35V	marine blue metallic			35V
	40B	nougat brown metallic			40B
	980	silver metallic			980
	36P	venetian blue metallic			36P
	37B	baltic blue metallic			37B
	693	stone grey metallic			693
	22D	slate grey metallic			22D
	81L	velvet red metallic			81L
	81K	coral metallic			81K
	550	linen grey metallic			550
	22E	forest green metallic			22E
	40L	cognac brown metallic			40L
	22L	oak green metallic			22L
	738	black-metallic			738
	37X	horizon blue metallic			37X
	37U	cobalt blue metallic			37U

Pos	Part Number	Name	Remarks	Qty	Model
	37W	midnight blue metallic			37W
	82H	coral red metallic			82H
	38A	amethyst metallic			38A
	37Z	amazon green metallic			
	92E	polar silver metallic			92E
-	911 096 064 00	clear lacquer 1 LTR. GLASSODUR-MS 923-85		X	
-	911 095 902 60	top-coat paint 2 K - ACRYL 1 LTR.		X	
	347	dark blue			347
	80F	carmine red			80F
	10W	summer yellow			10W
	027	guards red			027
	80K	guards red			80K
	499	caramel beige			499
	21M	turquoise			21M
	700	black			700
	908	grand prix white			908
	60M	linen			60M
	548	apricot beige			548
	22C	murano green			22C
	38B	maritime blue			38B
	22S	signal green			22S
	22R	mint green			22R
	82N	rubystone red			82N
-	911 095 932 20	paint touch-up applicator		X	
	027	guards red			027

Pos	Part Number	Name	Remarks	Qty	Model
	80K	guards red			80K
	80F	carmine red			80F
	700	black			700
	908	grand prix white			908
	10W	summer yellow			10W
	499	caramel beige			499
	21M	turquoise			21M
	347	dark blue			347
	60M	linen			60M
	548	apricot beige			548
	22C	murano green			22C
	38B	maritime blue			38B
	22S	signal green			22S
	22R	mint green			22R
	82N	rubystone red			82N
-	911 095 933 20	paint touch-up applicator set comprising: top-coat paint and clear lacquer		X	
	80D	cassis red metallic			80D
	697	diamond-blue metallic			697
	980	silver metallic			980
	699	granite green metallic			699
	40D	espresso brown metallic			40D
	35V	marine blue metallic			35V
	35Y	lagoon green metallic			35Y
	36P	venetian blue metallic			36P
	40B	nougat brown metallic			40B

Pos	Part Number	Name	Remarks	Qty	Model
	37B	baltic blue metallic			37B
	693	stone grey metallic			693
	22D	slate grey metallic			22D
	81L	velvet red metallic			81L
	81K	coral metallic			81K
	550	linen grey metallic			550
	22E	forest green metallic			22E
	40L	cognac brown metallic			40L
	22L	oak green metallic			22L
	738	black-metallic			738
	37X	horizon blue metallic			37X
	37U	cobalt blue metallic			37U
	37W	midnight blue metallic			37W
	82H	coral red metallic			82H
	38A	amethyst metallic			38A
	37Z	amazon green metallic			37Z
	92E	polar silver metallic			92E
		- -- E N D -- -			

Model	Year	MG	SG	Illustration	Restrictions	Update		
928	91	0	05	5-00		179	15:28	02.09.2004

Pos	Part Number	Name	Remarks	Qty	Model
		preservative agent sealing compound securing liquid			
		preservative agent			
-	999 571 062 00	care kit comprising: suitcase		1	
-	999 901 013 40	liquid preservative		1	
-	999 901 014 41	cleaning agents		1	
-	999 901 015 40	polisher		1	
-	999 901 016 40	tar remover		1	
-	999 901 017 40	dashboard cleaner		1	
-	999 901 018 40	paint polish		1	
-	999 901 019 41	insect remover		1	
-	999 901 020 40	spot remover		1	
-	999 901 021 40	polishing cotton		1	
-	999 901 022 40	polishing cloth		1	
-	000 044 000 02	preservative agent 250 ML		X	
-	999 917 803 00	window cleaner spray bottle 250 ML		X X	
-	928 628 931 00	silicone remover 1000 ML		X	
-	999 901 017 41	window cleaner 250 ML summer		X	
-	999 901 033 40	window cleaner 1000 ML winter		X	
-	999 901 030 40	rim cleaner spray bottle 500 ML		X	
-	999 901 031 40	rim cleaner refilling bottle 1000 ML		X	
-	999 901 036 40	car shampoo refilling bottle 1000 ML		X	
		sealing compound			

Model	Year	MG	SG	Illustration	Restrictions	Update		
928	91	0	05	5-00		179	15:28	02.09.2004

Pos	Part Number	Name	Remarks	Qty	Model
-	000 043 010 00	loctite -573- 1 TUBE - 50 CCM		X	
-	000 043 010 00	loctite -574- 1 TUBE - 50 CCM securing liquid		X	
-	928 101 921 00	loctite -270- 10 CCM high strength		X	
-	000 043 012 00	loctite -221- low strength 10 CCM		X	
		- -- E N D -- -			

Model	Year	MG	SG	Illustration	Restrictions	Update		
928	91	0	06	6-00		179	15:28	02.09.2004

Pos	Part Number	Name	Remarks	Qty	Model
		adhesive lubricants			
		adhesive			
		adhesive set loctite for pasting glass ceramics metal thermoset plastic		X	
-	000 043 051 00	adhesive loctite 312 50 CCM		X	
-	000 043 202 65	loctite AKTIVATOR NF 736 180 CCM		X	
-	000 043 013 00	loctite -80646- adhesive remover spray bottle 311 G		X	
-	000 043 204 86	adhesive set for polyurethane parts adhesive 150 ML hardener 150 ML		X	
		lubricants			
-	000 043 004 00	mounting paste optimoly ht 90 G		X	
-	000 043 020 00	optimoly TA mounting paste 1 tube 100 g		X	
-	000 043 005 00	grease for drive shaft 90 G		X	
-	000 043 024 00	extreme-pressure grease optimoly OLISTA-LONGTIME 3EP extreme-pressure grease 80 G		X	
-	000 043 204 21	grease for lock cylinder spraying can		X	
		- -- E N D -- -			

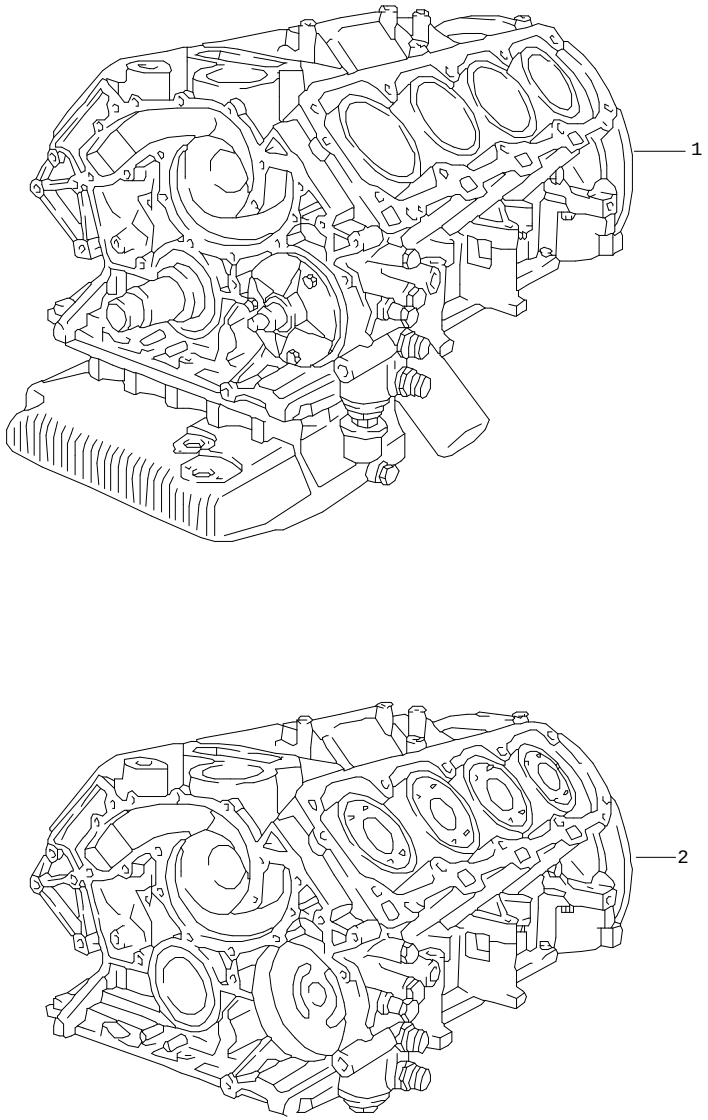

Pos	Part Number	Name	Remarks	Qty	Model
		replacement engine short engine crankcase			M28.41/42/47
		replacement engine ready for installation on request			
		short engine with pistons crankshaft oil pump oil pan			M28.41/42/47
1	928 100 911 14	short engine		1	M28.41/42/47
2	928 101 907 09	crankcase with pistons		1	M28.41/42/47
		- -- E N D -- -			

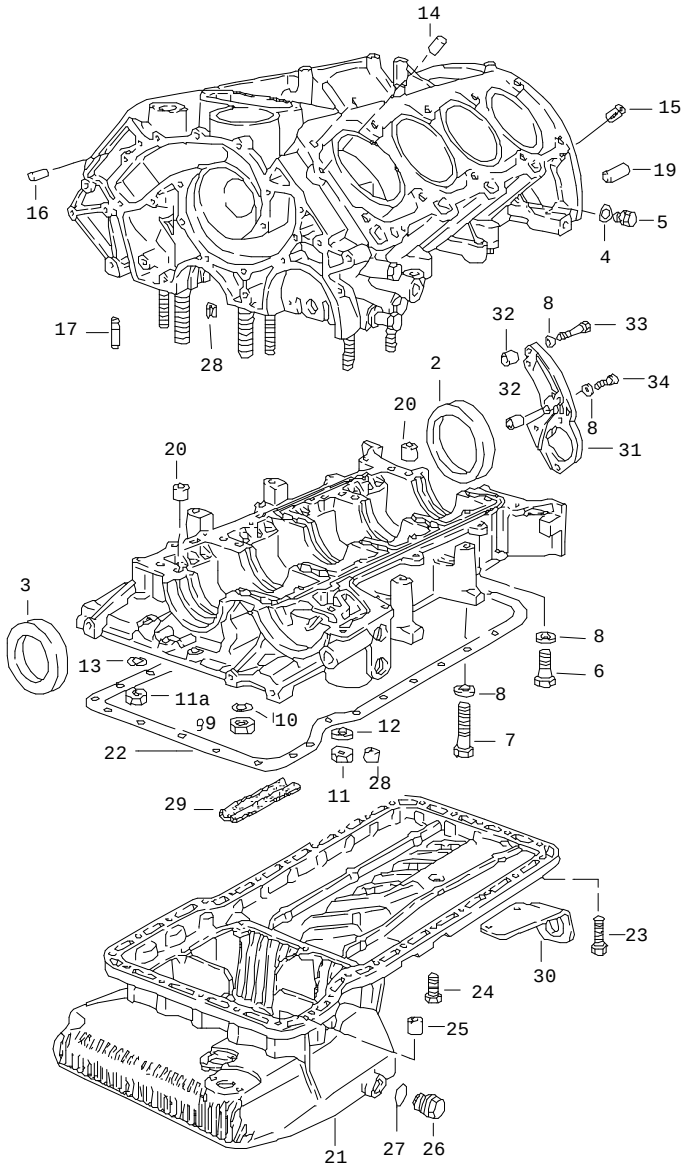

Pos	Part Number	Name	Remarks	Qty	Model
		crankcase single parts			M28.41/42/47
2	* 999 113 264 40	radial sealing ring 90 X 110 X 12		1	
3	* 999 113 263 40	shaft seal 60 X 85 X 10		1	
4	* 900 123 055 30	sealing ring A 12 X 17		2	
5	N 029 703 1	screw plug M 12 X 1,5		2	
6	900 075 099 02	hexagon-head bolt M 8 X 30		6	
7	N 010 361 4	hexagon-head bolt M 8 X 65		10	
8	900 025 007 02	washer A 8,4		24	
9	928 101 742 00	hexagon nut M 12 X 1,5		10	
10	928 101 301 02	washer		10	
11	N 011 010 13	hexagon nut M 10		22	
11A	928 101 741 00	hexagon nut M 10		10	
12	900 025 008 09	washer A 10,5		2	
13	928 101 303 00	washer		10	
14	999 012 034 00	straight pin 8 M 6 X 12		4	
15	900 095 072 01	tensioning sleeve 6 X 12		2	
16	N 013 199 1	straight pin 6 X 12		2	
17	911 101 011 01	splash valve		8	
19	900 012 070 00	straight pin 12 X 18		2	

Pos	Part Number	Name	Remarks	Qty	Model
20	928 101 195 03	fitting bushing		1	
21	928 101 208 01	oil pan	-88	1	
21	928 101 208 01	oil pan	89-	1	
22	* 928 101 207 00	oil sump gasket		1	
23	900 075 347 02	screw M 6 X 28 Z1		25	
24	900 075 341 02	screw M 6 X 25 Z1		5	
25	928 101 189 00	dowel sleeve		2	
26	944 107 197 01	screw plug		1	
27	* 900 123 118 30	sealing ring A 22 X 27		1	
28	N 013 315 1	roll pin 5 X 10		1	
29	928 604 121 00	insulating piece		1	
30	928 423 221 01	support		1	
31	928 101 093 02	mounting plate		1	
32	928 101 197 00	fitting bushing		2	
33	N 040 301 1	hexagon-head bolt M 8 X 48		2	
34	900 119 004 02	pan-head screw M 8 X 30		2	
		- -- E N D -- -			

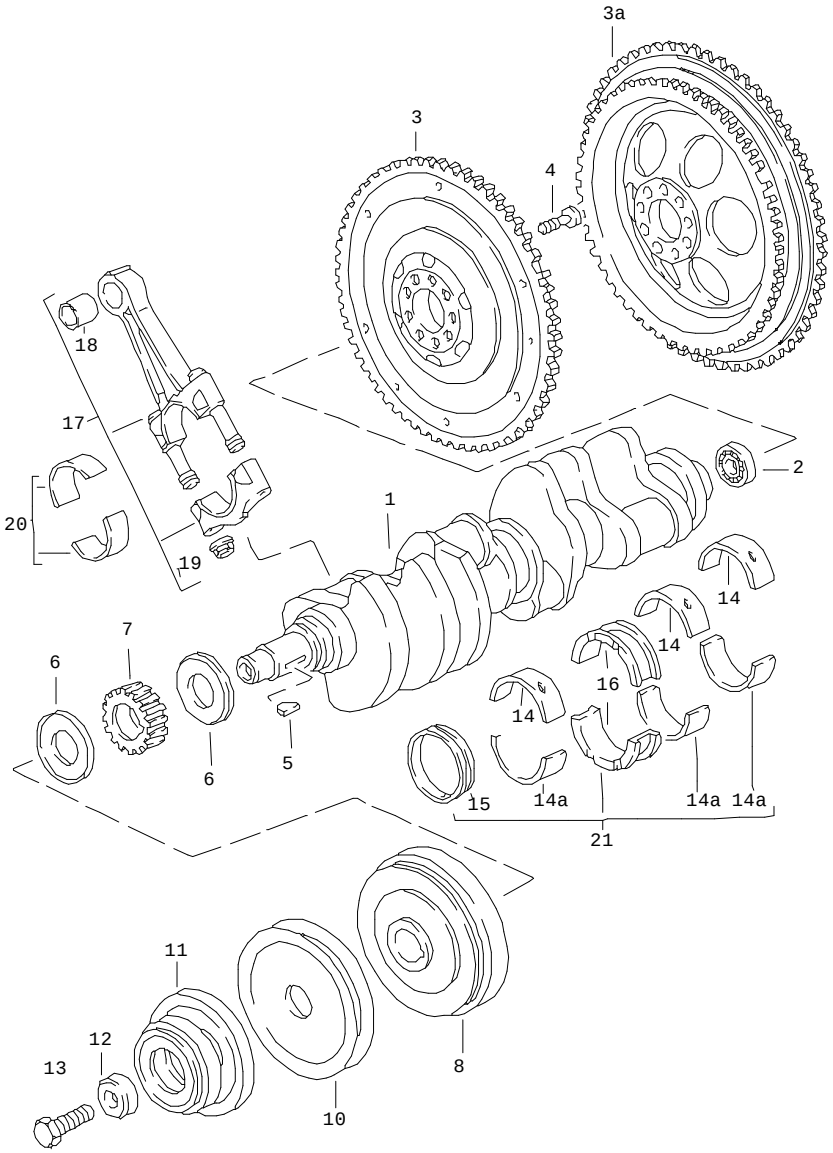

Pos	Part Number	Name	Remarks	Qty	Model
		crankshaft connecting rod			M28.41/42/47
1	> 928 102 011 27	crankshaft		1	
2	928 102 111 02	deep-groove ball bearing		1	
3	> 928 102 208 03	flywheel		1	M28.41/47
3A	928 102 075 03	flywheel	AUT. -88	1	M28.42
3A	928 102 075 04	flywheel	AUT. 89-	1	M28.42
4	928 102 151 01	pan-head screw		9	
5	900 118 014 00	woodruff key		1	
6	928 102 125 02	flange washer		2	
7	A 928 105 125 12	gear wheel		1	
7	928 105 125 12	gear wheel		1	
8	928 102 120 23	vibration damper orange	-89	1	M28.41/42
8	928 102 120 23	vibration damper black-grey	90-	1	M28.42/47
-	928 102 126 00	spacer	88-	1	M28.41 M 637
10	928 102 118 03	v-belt pulley compressor		1	
11	928 102 139 11	pulley M >> 81L 51762	AUT.	1	M28.41/42 M28.42
11	928 102 139 12	pulley M 81L 51763 >>	AUT.	1	M28.42
12	928 102 124 01	thrust washer		1	
13	900 083 036 02	hexagon-head bolt M 18 X 1,5 X 45		1	
14	* 928 101 115 02	main bearing shell		3	
	002	upper half 2,4,5			
14A	* 928 101 115 03	main bearing shell		3	
	002	lower half 2,4,5			

Pos	Part Number	Name	Remarks	Qty	Model
14	* 928 101 115 50	main bearing shell upper half 2,4,5 undersize 0,25 mm		X	
14A	* 928 101 115 51	main bearing shell lower half 2,4,5 undersize 0,25 mm		X	
14	* 928 101 115 60	main bearing shell upper half 2,4,5 undersize 0,50 mm		X	
14A	* 928 101 115 61	main bearing shell lower half 2,4,5 undersize 0,50 mm		X	
15	* 928 101 117 08	main bearing bush i		1	
15	* 928 101 117 58	main bearing bush i undersize 0,25 mm		1	
15	* 928 101 117 68	main bearing bush i undersize 0,50 mm		1	
16	* 928 101 142 02	thrust bearing		2	
	002	NR.3			
16	* 928 101 142 54	thrust bearing NR.3 undersize 0,25 mm		2	
16	* 928 101 142 64	thrust bearing NR.3 undersize 0,50 mm		2	
17	928 103 008 02	connecting rod M >> 81J 00726 M >> 81J 06740	 AUT.	8	 M28.41 M28.42
(17)	A 928 103 008 02	connecting rod M 81J 00727 >> M 81J 06741 >>	 AUT.	8	 M28.41 M28.42
(17)	928 103 008 02	connecting rod		8	
18	944 103 133 02	piston pin bush		8	
19	928 103 172 02	connecting rod nut		16	
20	928 103 143 02	bearing shell		16	
20	928 103 143 52	bearing shell oversize 0,25 mm		X	
20	928 103 143 57	bearing shell oversize 0,50 mm		X	
21	* 928 101 901 07	set of crankshaft bearings		1	
21	* 928 101 901 57	set of crankshaft bearings undersize 0,25 mm		1	
21	* 928 101 901 67	set of crankshaft bearings undersize 0,50 mm		1	

- -- E N D -- -

Model	Year	MG	SG	Illustration	Restrictions	Update	15:29	02.09.2004	PORSCHE PET PORSCHE
928	91	1	02	102-05		179			

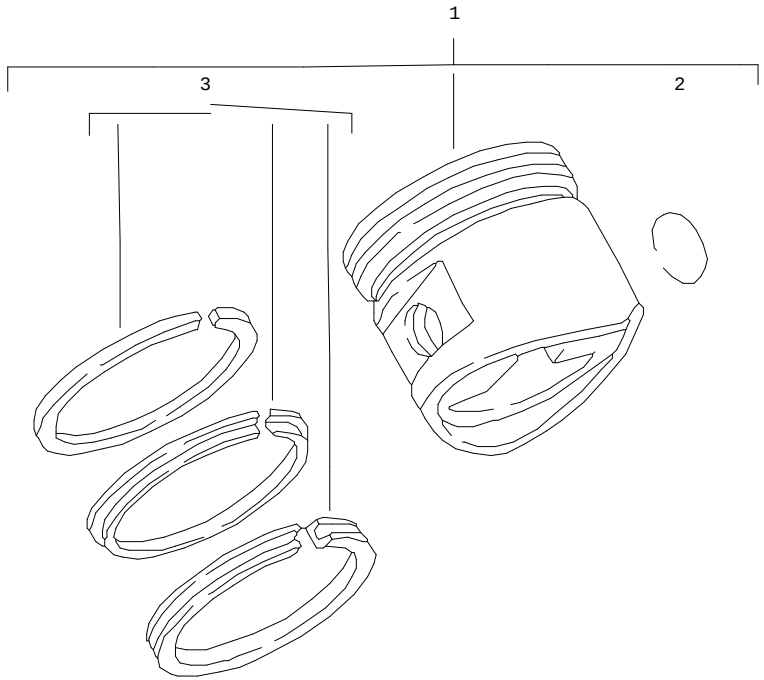

Pos	Part Number	Name	Remarks	Qty	Model
		piston piston rings			M28.41/42/47
1	928 103 043 09	piston tolerance group 0 99,98 MM - ks -		8	
1	928 103 043 19	piston tolerance group 1 99,99 MM - KS -		X	
1	928 103 043 29	piston tolerance group 2 100,00 MM - ks -		X	
1	928 103 043 58	piston tolerance group 0 100,48 MM - ks -		X	
1	928 103 043 69	piston tolerance group 1 100,49 MM - ks -		X	
1	928 103 043 79	piston tolerance group 2 100,50 MM - ks -		X	
2	N 012 277 1	snap ring		16	
3	928 103 906 22	set of piston rings 100,00 MM		X	
3	928 103 906 23	set of piston rings 100,50 MM		X	
		- -- E N D -- -			

Model	Year	MG	SG	Illustration	Restrictions	Update	15:29	02.09.2004	PORSCHE	PET	PORSCHE
928	91	1	03	103-00		179					

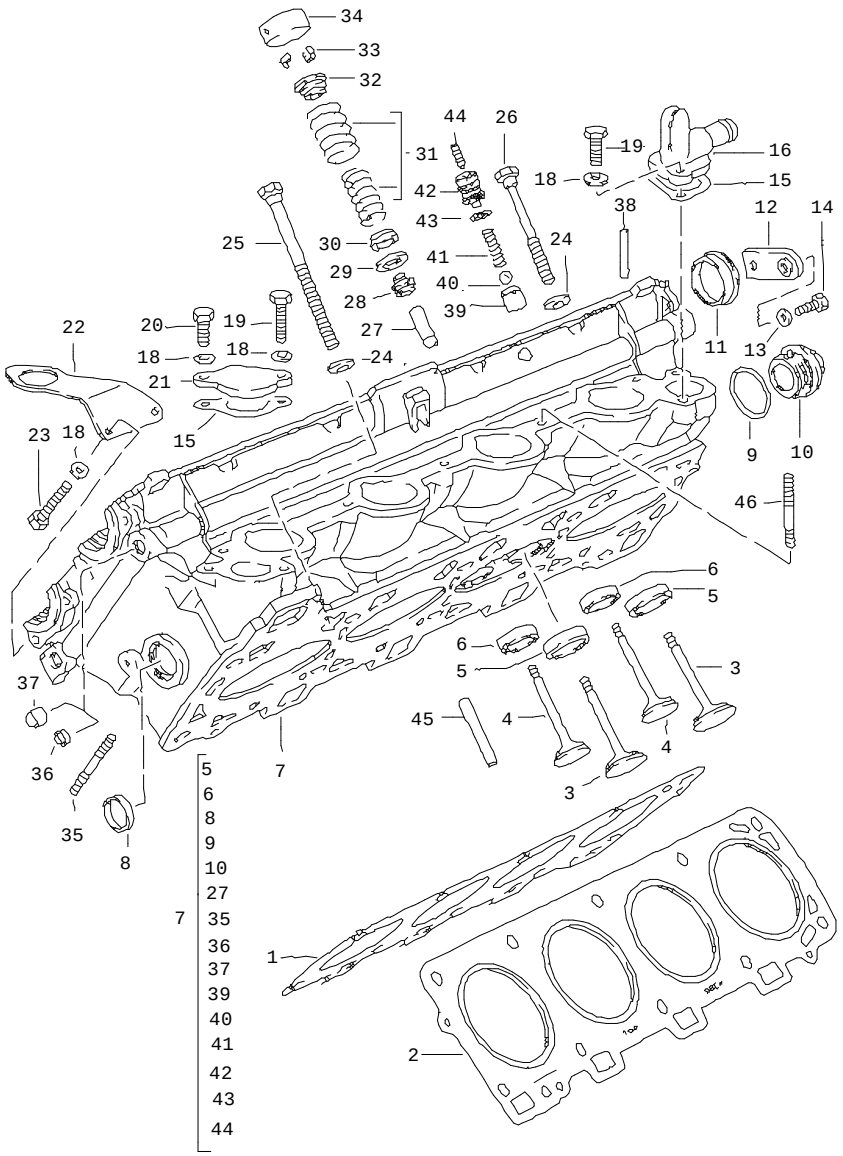

Pos	Part Number	Name	Remarks	Qty	Model
		cylinder head			M28.41/42/47
1	* 928 104 367 02	cylinder head gasket cyl. 1 - 4	/R	1	
1	928 104 367 05	cylinder head gasket cyl. 1 - 4 without asbestos	/R	1	
1	928 104 367 11	cylinder head gasket for resurfaced cylinder heads	/R	1	
2	* 928 104 368 02	cylinder head gasket cyl. 5 - 8	/L	1	
2	928 104 368 05	cylinder head gasket cyl. 5 - 8 without asbestos	/L	1	
2	928 104 368 11	cylinder head gasket for resurfaced cylinder heads	/L	1	
3	928 105 641 05	intake valve		16	
4	928 105 642 06	exhaust valve		16	
5	928 104 611 15	valve seat ring intake		16	
6	928 104 612 14	valve seat ring exhaust		16	
6	928 104 612 14	valve seat ring exhaust		16	
7	A 928 104 014 02	cylinder head M >> 81K 00120 M >> 81K 05238	 AUT.	2	M28.41/42 M28.41 M28.42
7	A 928 104 014 03	cylinder head M 81K 00121 >> M 81K 05239 >>	 AUT.	2	M28.41/42 M28.41 M28.42
7	928 104 014 04	cylinder head	89-90	2	M28.47
7	928 104 014 06	cylinder head	91-	2	
8	900 036 014 02	cover		2	
9	* N 043 811 1	sealing ring C 38 X 44		2	

Pos	Part Number	Name	Remarks	Qty	Model
10	A 999 064 030 30	screw plug CM 38 X 1,5		2	
10	944 104 228 01	screw plug		2	
11	* 928 105 215 00	cover		6	
12	928 105 205 00	support		6	
13	N 011 524 7	washer A 6,4		6	
14	900 075 016 02	hexagon-head bolt M 6 X 22		5	
15	A 928 106 167 01	gasket	87	2	
15	* 928 106 167 01	gasket without asbestos		2	
16	928 104 713 02	adapter cyl. 1 - 4	87	1	
(16)	928 104 713 02	adapter cyl. 1 - 4	88-	1	
18	900 025 007 02	washer A 8,4		8	
19	N 010 242 12	hexagon-head bolt M 8 X 25		3	
20	900 075 079 02	hexagon-head bolt M 8 X 22		1	
21	928 104 219 00	cover cyl. 5 - 8		1	
22	928 113 173 02	shackle for transportation		2	
23	900 075 085 02	hexagon-head bolt M 8 X 20		2	
24	944 104 229 00	washer M 12 X 1,5		20	
25	A 928 101 231 01	hexagon-head bolt M 12 X 1,5 X 180		18	
25	928 101 231 01	hexagon-head bolt M 12 X 1,5 X 180 M >> 81K 00120 M >> 81K 05238	 AUT.	18	 M28.41 M28.42
(25)	928 101 231 02	hexagon-head bolt M 12 X 1,5 X 199 M 81K 00121 >> M 81K 05239 >>	 AUT.	18	 M28.41 M28.42
26	A 928 101 233 01	hexagon-head bolt M 12 X 1,5 X 130		2	
26	928 101 233 01	hexagon-head bolt M 12 X 1,5 X 130 M >> 81K 00120 M >> 81K 05328	 AUT.	2	 M28.41 M28.42
(26)	928 101 233 02	hexagon-head bolt M 12 X 1,5 X 149 M 81K 00121 >> M 81K 05239 >>	 AUT.	2	 M28.41 M28.42
27	944 104 327 51	valve guide 1st oversize		32	
28	928 104 601 00	valve stem seal		32	
29	944 105 465 02	washer 0,5 MM		X	
(29)	944 105 465 03	washer 1,0 MM		X	
(29)	944 105 465 04	washer 1,5 MM		X	
(29)	944 105 465 05	washer 2,0 MM		X	
30	928 105 469 07	washer		32	
31	928 105 905 07	set of valve springs		32	
32	944 105 467 03	concave washer		32	
33	928 105 221 10	valve collet		64	
34	928 105 312 02	hydraulic valve tappet		32	
35	999 062 044 02	stud BM 8 X 30		16	
36	N 011 918 1	cover		X	
37	911 101 182 00	plug		X	
38	A 928 105 262 00	pin		5	

Pos	Part Number	Name	Remarks	Qty	Model	Pos	Part Number	Name	Remarks	Qty	Model
(38)	928 105 262 00	pin		5							
39	928 104 121 00	valve seat		1							
40	N 025 669 2	ball		1							
41	928 104 129 00	compression spring		1							
42	928 104 119 01	spring guide		1							
43	999 701 654 40	o-ring		1							
44	999 218 035 02	threaded pin		1							
45	000 043 204 45	sleeve 7 MM		X							
46	999 223 002 02	stud M 8 X 40		10							
		- -- E N D -- -									

Model	Year	MG	SG	Illustration	Restrictions	Update				
928	91	1	03	103-05		179	15:29	02.09.2004	PORSCHE	PET	PORSCHE

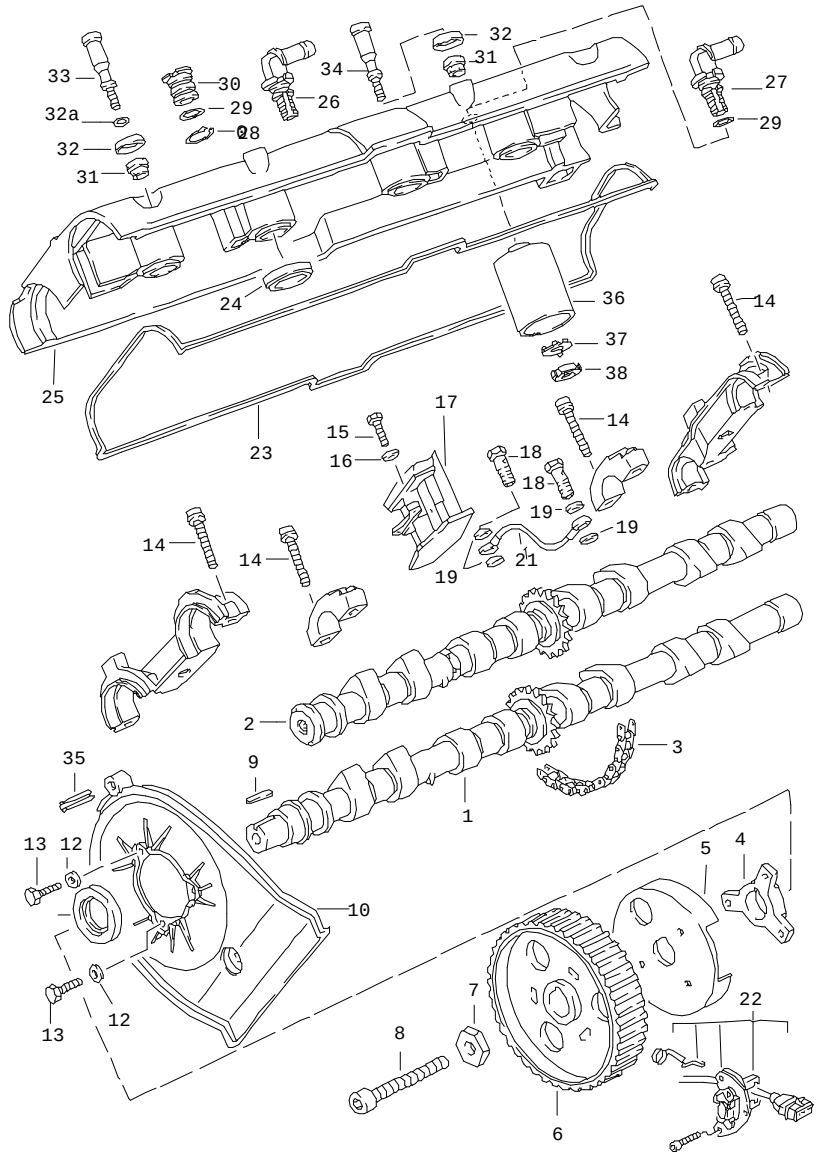

Pos	Part Number	Name	Remarks	Qty	Model
		camshaft			M28.41/42/47
1	A 928 105 273 00	camshaft exhaust cyl. 1 - 4	87	1	
1	928 105 273 00	camshaft exhaust cyl. 1 - 4	88-	1	
1	928 105 273 01	camshaft	88-	1	M28.41 M 637
		exhaust cyl. 1 - 4	89-		M28.47
(1)	A 928 105 274 00	camshaft exhaust cyl. 5 - 8	87	1	
(1)	928 105 274 00	camshaft exhaust cyl. 5 - 8	88-	1	
(1)	928 105 274 01	camshaft	88-	1	M28.41 M 637
		exhaust cyl. 5 - 8	89-		M28.47
2	A 928 105 271 00	camshaft intake cyl. 1 - 4	87	1	
2	928 105 271 00	camshaft intake cyl. 1 - 4	88-	1	
2	928 105 271 01	camshaft	88-	1	M28.41 M 637
		intake cyl. 1 - 4	89-		M28.47
(2)	A 928 105 272 00	camshaft intake cyl. 5 - 8	87	1	
(2)	928 105 272 00	camshaft intake cyl. 5 - 8	88-	1	
(2)	928 105 272 01	camshaft	88-	1	M28.41 M 637
		intake cyl. 5 - 8	89-		M28.47

Pos	Part Number	Name	Remarks	Qty	Model
3	944 105 501 05	timing chain		2	
4	928 105 459 00	hub		2	
5	928 105 460 01	rotor trim		2	
6	928 105 530 01	camshaft timing gear		2	
7	928 105 457 02	washer		2	
8	N 010 455 3	screw M 10 X 55		2	
9	900 117 055 00	key		2	
10	U 928 105 127 06	toothed belt covering	/L	1	
10	928 105 127 06	toothed belt covering	/L	1	
(10)	928 105 148 06	toothed belt covering	/R	1	
11	999 113 282 40	shaft seal		2	
12	900 025 007 02	washer A 6,4		6	
13	900 075 014 02	hexagon-head bolt M 6 X 18		6	
14	999 218 023 02	screw M 8 X 35		52	
(14)	999 510 029 02	screw M 8 X 40		18	
15	900 067 089 02	pan-head screw M 6 X 22		4	
16	N 011 524 7	washer A 6,4		4	
17	928 105 028 08	chain adjuster cyl. 1 - 4		1	
(17)	928 105 027 08	chain adjuster cyl. 5 - 8		1	
18	928 105 476 00	banjo bolt		2	
19	900 123 050 30	sealing ring		4	
20	928 105 476 00	banjo bolt		1	
21	928 105 213 04	pipeline cyl. 1 - 4		1	
(21)	928 105 214 04	pipeline cyl. 5 - 8		1	
22	-	see group 9/01/02			
23	A 928 104 447 09	gasket	-88	2	
23	928 104 447 09	gasket	89-	2	
24	928 104 443 08	sealing ring		8	
25	A 928 104 461 08	cylinder head cover	87	2	
25	928 104 461 08	cylinder head cover	88-	2	
26	928 107 733 02	adapter cyl. 1 - 4		1	
27	928 107 733 00	adapter cyl. 1 - 4		1	
28	N 012 420 1	circlip 20 X 1,2		2	
29	900 174 056 40	o-ring 17 X 2,5		4	
30	928 104 485 01	cover cyl. 5 - 8		2	
31	928 104 115 02	thrust ring		26	
32	928 104 116 00	thrust washer		26	
32A	900 123 144 30	sealing ring		12	
33	928 104 111 01	pan-head screw short		18	
34	928 104 117 01	pan-head screw long		28	
35	999 095 103 01	roll pin		2	
36	928 107 731 01	oil separator		1	
37	900 160 015 00	tab washer		2	
38	900 159 008 02	grooved nut		2	

Pos	Part Number	Name	Remarks	Qty	Model	Pos	Part Number	Name	Remarks	Qty	Model
--	928 105 509 01	guide piece upper		1							
--	944 105 949 00	guide piece repair kit		1							
		- -- E N D -- -									

Model	Year	MG	SG	Illustration	Restrictions	Update	15:29	02.09.2004	PORSCHE	PET	PORSCHE
928	91	1	03	103-10		179					

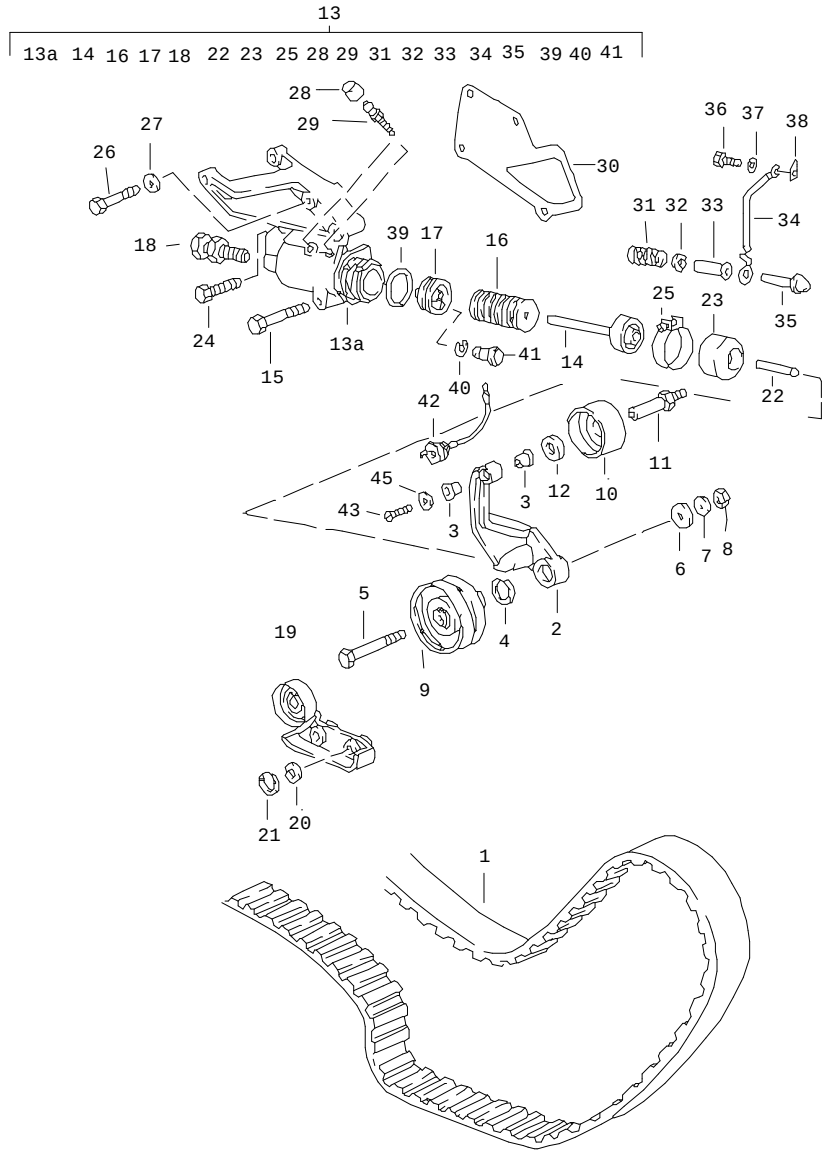

Pos	Part Number	Name	Remarks	Qty	Model
		driving mechanism camshaft			M28.41/42/47
1	A 928 105 157 30	toothed belt	87	1	
1	928 105 157 50	toothed belt	88-90	1	
1	928 105 157 50	toothed belt	91-	1	
2	928 105 489 02	carrier for tension roller		1	
3	928 105 613 04	bearing sleeve		2	
4	N 042 364 1	circlip 20 X 1,75		1	
5	900 074 139 02	hexagon-head bolt M 8 X 55		1	
6	999 025 068 07	washer 9 X 25 X 3,5		1	
7	900 025 007 02	washer A 8,4		1	
8	900 076 025 02	hexagon nut M 8		1	
9	928 105 512 12	tensioning roller		1	
10	928 105 571 04	roller		1	
11	928 105 570 08	pin		1	
12	928 105 572 00	washer		1	
13	928 105 036 00	tension roller housing		1	
13A	928 105 066 00	tension roller housing		1	
14	A 928 105 059 04	piston		1	
14	928 105 059 04	piston		1	
15	N 010 360 6	hexagon-head bolt M 8 X 60		1	
16	928 105 539 03	bi-metal plate		35	
17	928 105 588 00	valve support		1	
18	928 105 075 03	adjusting screw		1	

Pos	Part Number	Name	Remarks	Qty	Model
19	928 105 067 00	carrier for tension roller M >> 81H 01233 M >> 81H 08036	 AUT.	1	 M28.41 M28.42
(19)	928 105 067 01	carrier for tension roller M 81H 01234 >> 85L 01162 M 81H 08037 >> 81L 51964	 AUT.	1	 M28.41/47 M28.42
(19)	928 105 067 00	carrier for tension roller M 85L 01163 >> M 81L 51965 >>	 AUT.	1	 M28.47 M28.42
20	900 234 003 02	shim 8 X 14 X 1		2	
21	N 012 408 2	circlip 8 X 0,8		2	
22	928 105 551 02	push rod		1	
23	928 105 552 08	roller		1	
24	900 074 134 02	hexagon-head bolt M 8 X 45		1	
(25)	999 512 344 02	clamp 49,9 - 53,0		1	
26	900 074 139 02	hexagon-head bolt M 8 X 55		2	
27	900 025 007 02	washer A 8,4		1	
28	211 611 483	dust boot		2	
29	211 611 477 A	bleeder valve		2	
30	928 105 611 05	gasket		1	
(30)	928 105 611 05	gasket without asbestos		1	
31	928 105 577 03	compression spring		1	
32	900 025 008 09	washer		1	
33	928 105 574 01	guide sleeve		1	
34	928 105 615 01	bridge	-88	1	
(34)	928 607 110 00	cable	89-	1	
35	928 105 573 02	push rod		1	
36	N 010 205 6	hexagon-head bolt M 5 X 10		1	
37	900 025 003 02	washer A 5,3		1	
38	999 652 315 02	flat plug for carrier for tension roller		1	
39	999 701 650 40	o-ring 27,5 X 1,5		1	
40	900 906 002 00	snap ring		1	
41	928 105 589 00	valve		1	
42	928 606 148 00	extension cable		1	
43	900 249 008 02	countersunk-head screw 6 X 12		1	
45	928 105 562 00	washer		1	
46	928 105 578 03	mounting		1	
47	N 012 277 1	snap ring		1	
		- -- E N D -- -			

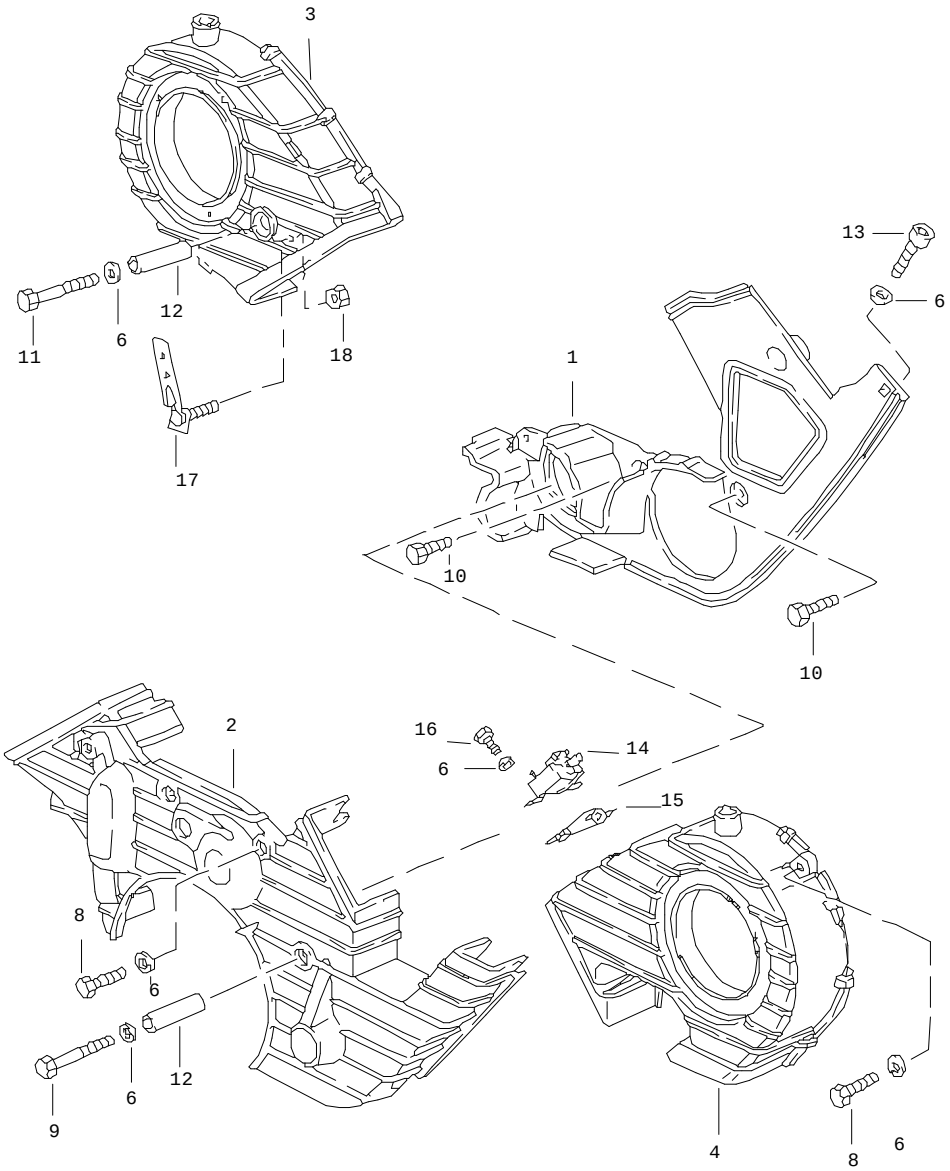

Pos	Part Number	Name	Remarks	Qty	Model
		toothed belt covering			M28.41/42/47
1	928 105 147 05	toothed belt covering rear M >> 81H 01233 M >> 81H 08036	 AUT.	1	 M28.41 M28.42
(1)	928 105 147 07	toothed belt covering rear M 81H 01234 >> 85L 01162 M 81H 08037 >> 81L 51964	 AUT.	1	 M28.41/47 M28.42
(1)	928 105 147 05	toothed belt covering rear M 85L 01163 >> M 81L 51965 >>	 AUT.	1	 M28.47 M28.42
2	928 105 144 05	toothed belt covering front M >> 81H 00659 M >> 81H 06735	 AUT.	1	 M28.41 M28.42
(2)	928 105 144 07	toothed belt covering front M 81H 00660 >> M 81H 06736 >>	 AUT.	1	 M28.41 M28.42
3	928 105 146 06	toothed belt covering	/R	1	
4	928 105 145 09	toothed belt covering	/L	1	
6	N 011 666 7	washer A 6,4		X	
8	900 075 014 02	hexagon-head bolt M 6 X 18		5	
9	N 040 307 1	hexagon-head bolt M 6 X 73		1	
10	900 074 015 02	hexagon-head bolt M 6 X 30		2	
11	900 075 346 02	hexagon-head bolt M 6 X 40		1	
(11)	N 010 366 4	hexagon-head bolt M 6 X 55		1	
12	928 105 445 00	spacer tube 44,5 MM			
13	900 067 011 02	pan-head screw M 6 X 20		X	

Pos	Part Number	Name	Remarks	Qty	Model	Pos	Part Number	Name	Remarks	Qty	Model
14	911 618 123 01	vacuum valve		1							
15	928 110 532 00	support									
16	900 074 015 02	hexagon-head bolt M 6 X 30		2							
17	928 602 067 00	support		1							
18	900 910 012 02	lock nut		1							
		- -- E N D -- -									

Model	Year	MG	SG	Illustration	Restrictions	Update	15:30	02.09.2004	PORSCHE	PET	PORSCHE
928	91	1	04	104-00		179					

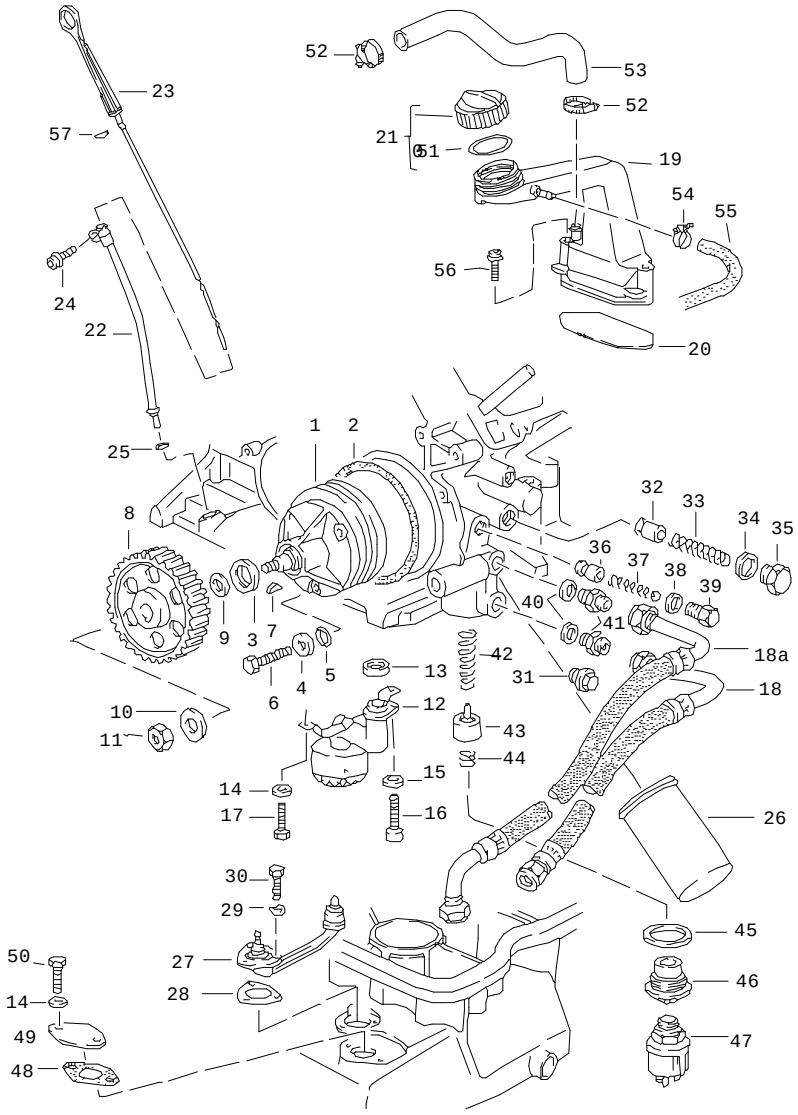

Pos	Part Number	Name	Remarks	Qty	Model
		engine lubrication			M28.41/42/47
1	928 107 008 02	oil pump		1	
2	999 701 633 40	o-ring 98 X 3		1	
3	999 113 275 40	shaft seal 20 X 30 X 7		1	
4	928 107 165 00	washer A 8,4		3	
5	999 701 006 40	o-ring		3	
6	N 040 301 1	hexagon-head bolt M 8 X 48		3	
7	N 012 713 1	woodruff key 5 X 6,5		1	
8	928 107 107 13	gear wheel		1	
9	928 107 166 00	support washer		1	
10	928 101 303 00	washer 10,5		1	
11	N 011 010 6	hexagon nut M 10		1	
12	928 107 032 06	suction tube		1	
13	928 107 136 04	sealing ring		1	
14	N 011 524 7	washer A 6,4		4	
15	900 025 007 02	washer A 8,4		1	
16	N 014 726 1	pan-head screw M 8 X 30		1	
17	999 072 005 09	hexagon-head bolt M 6 X 12		2	
18	A 928 107 301 07	oil hose	87	1	
18	928 107 301 07	oil hose	-89	1	
(18)	928 107 301 08	oil hose	90-	1	M28.42/47
18A	A 928 107 302 08	oil hose	87	1	

Pos	Part Number	Name	Remarks	Qty	Model
18A	928 107 302 08	oil hose	-89	1	
(18A)	928 107 302 09	oil hose	90-	1	M28.42/47
19	A 928 107 303 07	filler neck		1	
19	928 107 303 07	filler neck		1	
20	928 107 307 00	gasket		1	
21	944 107 091 01	oil filler cover		1	
22	A 928 107 020 03	guide tube		1	
22	928 107 020 03	guide tube		1	
23	928 107 041 01	oil level dipstick		1	
24	900 075 357 02	screw M 6 X 12 Z1		1	
25	900 174 044 40	round seal 9 X 2		1	
26	928 107 201 05	oil filter		1	
27	928 606 301 02	tank gauge	87	1	
(27)	928 606 301 03	tank gauge	88-	1	
28	928 606 213 03	gasket		1	
29	900 028 007 02	spring washer B 5		3	
30	N 010 207 6	hexagon-head bolt M 5 X 12		3	
31	N 016 163 2	screw plug M 22 X 1,5		2	
32	928 107 182 00	piston		1	
33	928 107 183 01	compression spring		1	
34	900 123 060 30	sealing ring A 24 X 29		1	
35	928 107 181 01	screw plug		1	
36	928 107 179 02	piston		1	
37	928 107 176 02	compression spring		1	
38	900 123 140 30	sealing ring A 18 X 22		1	
39	928 107 180 01	screw plug		1	
40	900 123 118 30	sealing ring A 22 X 27		2	
41	900 915 003 02	screw socket		2	
42	928 107 171 01	spring		1	
43	928 107 172 02	regulator insert		1	
44	928 107 173 00	spring		1	
45	900 123 143 70	sealing ring C 48 X 55		1	
46	928 107 174 07	screw plug		1	
47	928 606 203 01	oil pressure sender with warning contact	-88	1	
(47)	928 606 203 03	pressure transmitter with warning contact	89-	1	
48	A 928 107 169 01	gasket		1	
(48)	928 107 169 01	gasket without asbestos		1	
49	928 107 209 00	cover		1	
50	N 010 217 9	hexagon-head bolt M 6 X 20		2	
51	999 701 846 40	o-ring		1	
52	999 512 346 02	hose clamp		2	
53	928 107 445 02	hose		1	
54	N 023 570 2	hose clamp		2	
55	928 107 603 00	hose		1	
56	900 075 344 02	hexagon-head bolt M 6 X 50 Z1		2	
57	999 701 320 40	o-ring 6 X 2		1	

Pos	Part Number	Name	Remarks	Qty	Model	Pos	Part Number	Name	Remarks	Qty	Model
-	928 107 212 00	engine oil cooler	90-	1							
-	900 331 022 40	o-ring	90-	2							
-	900 075 014 02	hexagon-head bolt M 6 X 18	90-	2							
-	N 011 524 7	washer A 6,4	90-	2							
-	999 591 882 02	speed nut M 6	90-	2							
		- -- E N D -- -									

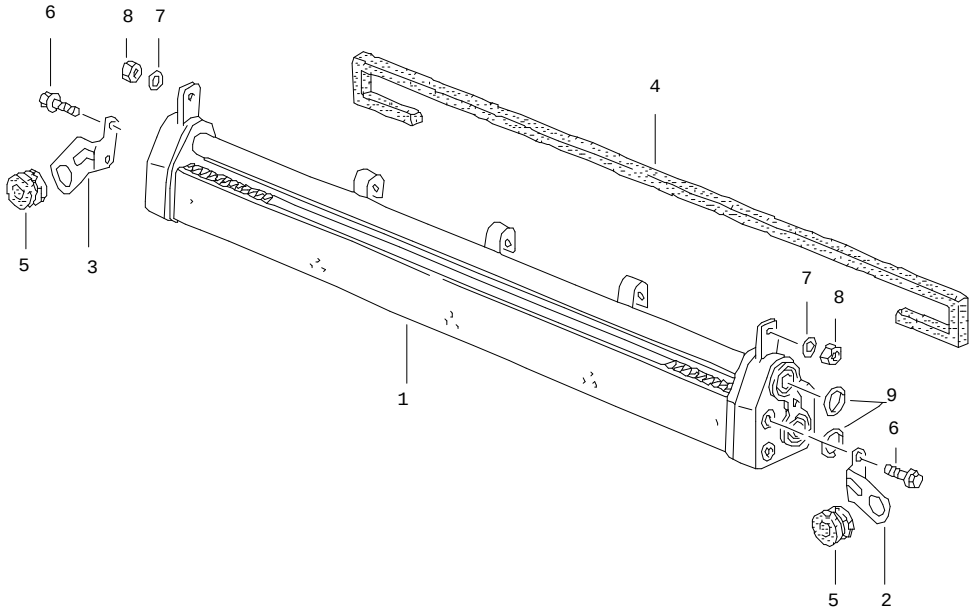

Pos	Part Number	Name	Remarks	Qty	Model
		engine oil cooling	90-		M28.42/47
1	928 107 212 00	engine oil cooler		1	
2	928 107 213 00	support		1	
3	928 107 214 00	support		1	
4	928 504 671 02	gasket		1	
5	999 702 079 50	grommet		2	
6	900 067 269 02	screw M 6 X 16		4	
7	900 151 008 02	washer A 8,4		2	
8	900 076 025 02	hexagon nut M 8		2	
9	900 331 022 40	o-ring		2	
		- -- E N D -- -			

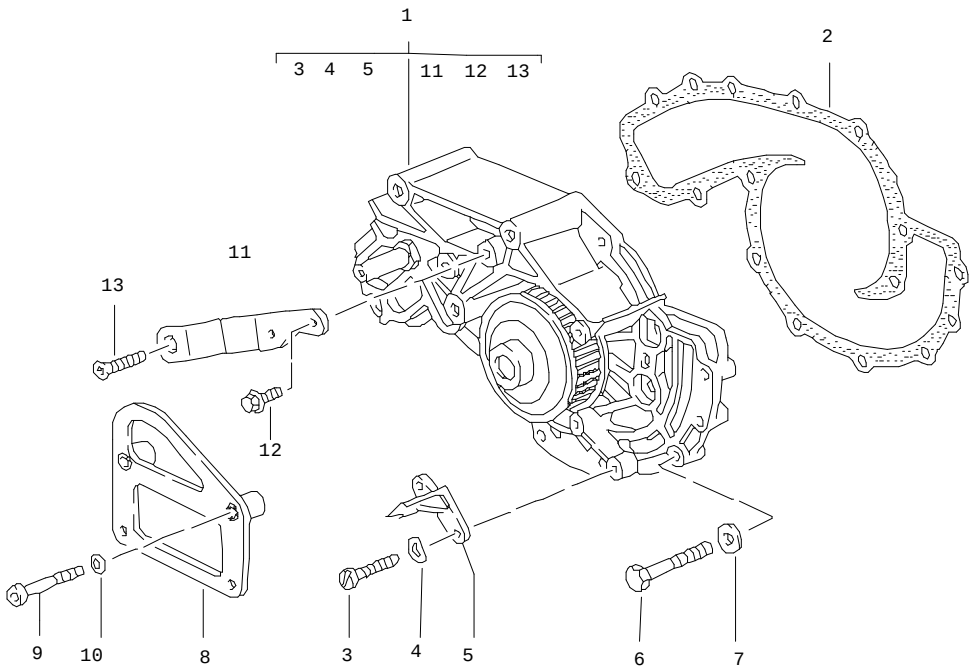

Pos	Part Number	Name	Remarks	Qty	Model
		water pump see technical information GRP.1 NR.4/90			M28.41/42/47
1	> 928 106 015 20	water pump M >> 81H 00659 M >> 81H 06735	 AUT.	1	 M28.41 M28.42
1	> 928 106 015 20	water pump M 81H 00660 >> M 81H 06736 >>	 AUT.	1	 M28.41 M28.42
2	* 928 106 134 05	gasket without asbestos		1	
3	900 014 066 02	pan-head screw M 5 X 18		2	
4	900 025 003 02	washer A 5,3		2	
5	928 105 176 01	pointer for t.d.c.		1	
6	N 010 217 9	hexagon-head bolt M 6 X 20		5	
6	900 075 341 02	screw M 6 X 25		8	
7	N 011 524 7	washer A 6,4		X	
8	928 101 412 03	shackle for transportation		1	
9	900 067 081 02	pan-head screw M 8 X 35		2	
10	N 011 525 13	washer A 8,4		1	
11	928 105 564 00	support M 81H 00660 >> M 81H 06736 >>	 AUT.	1	 M28.41 M28.42
12	900 075 355 02	screw M 6 X 16 Z1		1	
13	900 249 008 02	countersunk-head screw M 6 X 12		1	
		- -- E N D -- -			

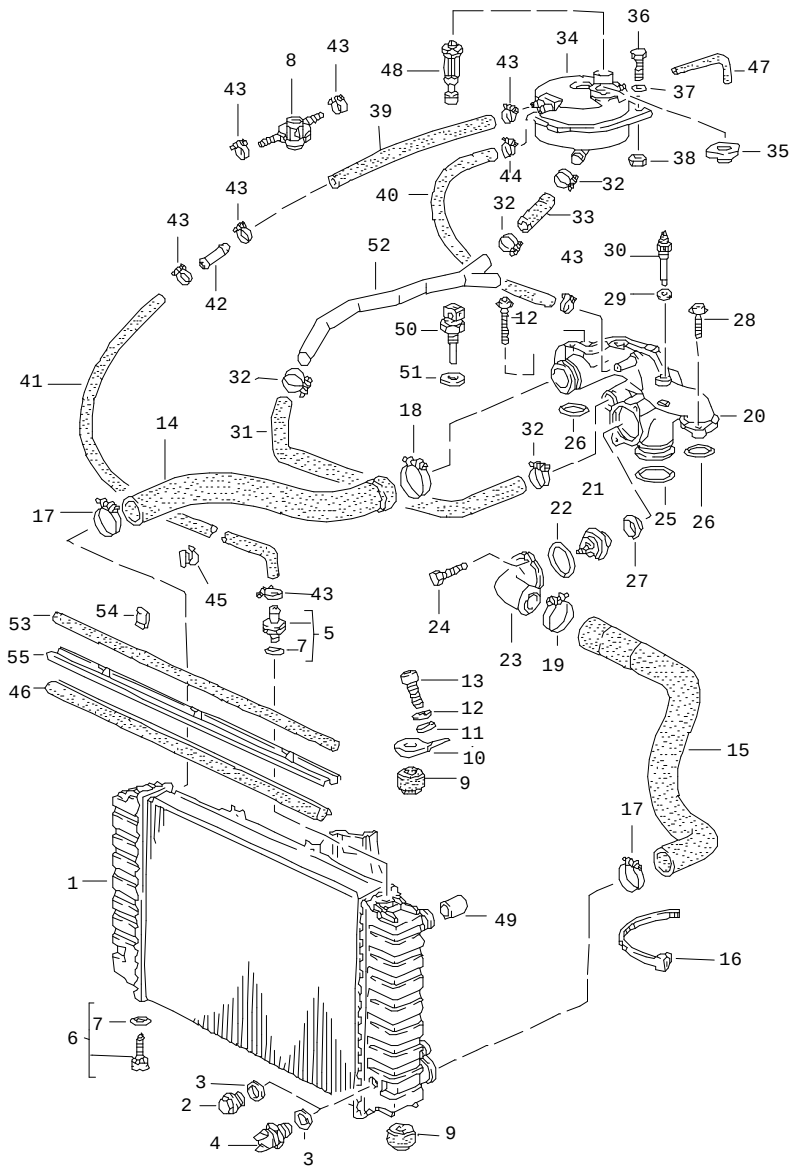

Pos	Part Number	Name	Remarks	Qty	Model
		water cooling 1			M28.41/42/47
1	928 106 044 01	radiator engine oil cooler	-89	1	M28.41
1	928 106 044 01	radiator engine oil cooler	89	1	M28.47
(1)	928 106 043 01	radiator engine oil cooler transmission oil cooler	AUT. -89	1	M28.42
(1)	928 106 023 20	radiator	90-	1	M28.47
(1)	928 106 042 03	radiator transmission oil cooler	AUT. 90-	1	M28.42
2	N 016 163 2	screw plug CM 22 X 1,5		1	
3	* 900 123 149 70	sealing ring A 22 X 29		1	
4	928 606 149 00	temperature switch		1	
5	928 106 443 02	breather adapter		1	
6	928 106 444 01	drain plug		1	
7	999 701 651 40	o-ring 7,65 X 1,78		X	
8	928 641 513 00	pressure switch		1	
9	928 106 177 01	rubber mounting		4	
10	928 106 178 01	support		2	
11	900 151 008 02	washer A 8,4		2	
12	900 067 248 02	hexagon socket head bolt M 8 X 70 Z1		1	
13	900 119 052 02	pan-head screw M 8 X 16		2	
14	928 106 238 08	hose		1	
15	928 106 239 09	hose		1	
16	999 513 010 40	tie-wrap		1	

Pos	Part Number	Name	Remarks	Qty	Model
17	999 512 404 00	hose clamp 50 - 70 W2		2	
18	999 512 331 02	hose clamp S 61/15		1	
19	999 512 334 02	hose clamp S 59/15		1	
20	928 106 065 03	regulator housing		1	
21	A 928 106 129 16	thermostat	-89	1	
21	928 106 129 17	thermostat	90-	1	
22	* 999 701 632 40	o-ring		1	
23	928 106 173 02	cover regulator housing		1	
24	900 075 341 02	screw M 6 X 25 Z1		2	
25	* 999 701 627 40	o-ring 53 X 7		1	
26	928 106 227 00	gasket		2	
27	928 106 163 00	gasket		1	
28	900 067 276 02	hexagon socket head bolt M 8 X 35 Z1		3	
29	* 900 123 007 30	sealing ring A 14 X 18		1	
30	928 606 201 01	remote temperature sensor	-88	1	
30	928 606 201 03	temperature sensor	89-	1	
31	928 106 321 03	line	/LL	1	
(31)	927 106 321 05	line	/RL	1	
32	999 512 374 02	hose clamp SGT 20 - 32/9		3	
33	928 106 323 01	line		1	
34	928 106 256 03	expansion tank	/LL	1	
(34)	927 106 256 01	expansion tank	/RL	1	
35	928 106 257 03	catch		1	
36	900 187 015 02	tapping screw 6,3 X 16		2	
37	N 011 612 3	washer R 6,6		2	
38	999 591 571 02	speed nut B 6,3		2	
-	999 181 709 50	hose 8 X 14		*	
		70 MM		1	
40	928 106 275 03	hose	/LL	1	
(40)	927 106 275 03	hose	/RL	1	
41	928 106 277 02	hose	/LL	1	
(41)	927 106 277 02	hose	/RL	1	
42	999 230 106 02	nipple		1	
43	N 023 570 2	hose clamp S 17/9		X	
44	N 023 570 2	hose clamp		X	
45	999 651 165 02	cable clamp		3	
46	928 106 271 02	sealing strip		1	
47	928 106 425 00	overpressure hose 350 MM		1	
48	928 641 503 01	tank gauge for cooling water		1	
49	928 106 142 00	water tube for radiator		1	
50	928 606 126 00	temperature sensor		1	
51	900 123 006 30	sealing ring		1	
52	-	see group 8/13/10			
53	999 911 379 40	gasket 17 X 12 X 615		1	M28.41/47
(53)	999 911 357 40	gasket 17 X 12 X 615	AUT.	1	M28.42

Pos	Part Number	Name	Remarks	Qty	Model	Pos	Part Number	Name	Remarks	Qty	Model
54	999 591 440 02	clamp 0,75 - 1,0		3							
55	928 106 131 00	profile strip		1							
		- -- E N D -- -									

Model	Year	MG	SG	Illustration	Restrictions	Update				
928	91	1	05	105-06		179	15:31	02.09.2004	PORSCHE	PET	PORSCHE

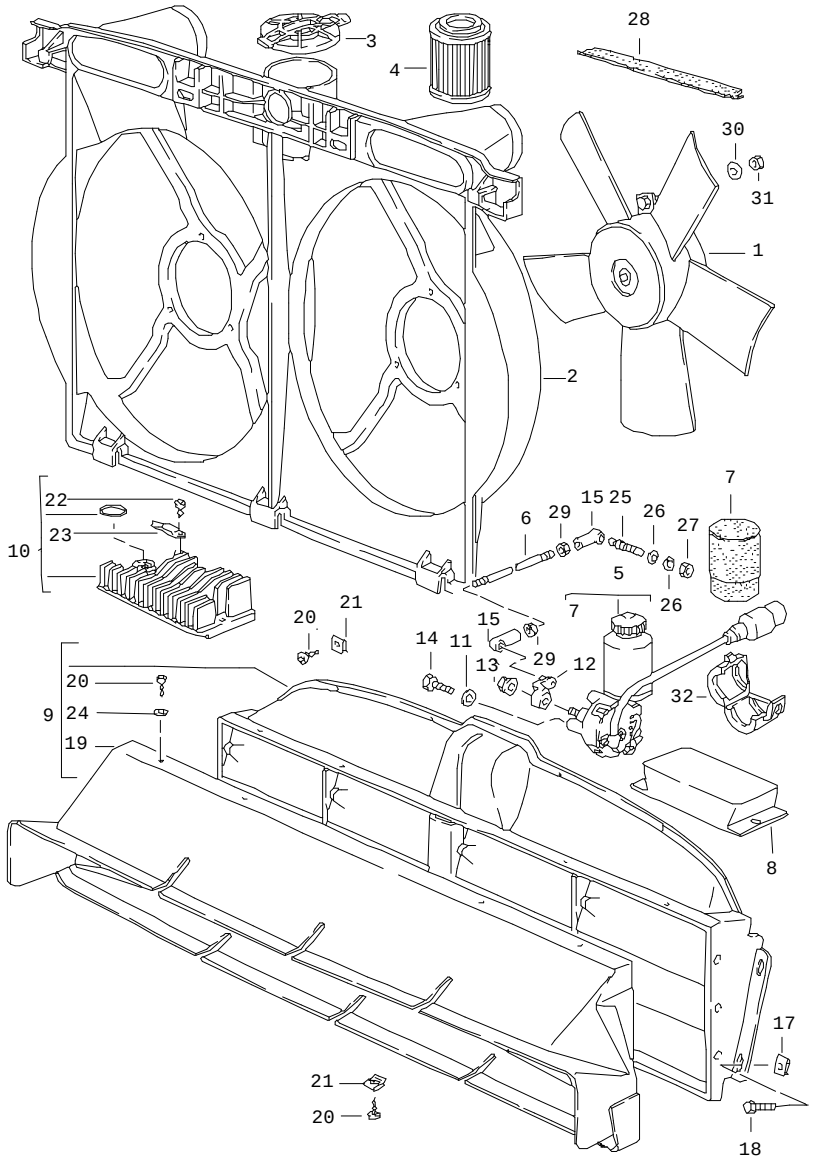

Pos	Part Number	Name	Remarks	Qty	Model
		water cooling 2			M28.41/42/47
1	928 624 145 00	blower		2	
2	928 106 259 02	air duct		1	
3	928 106 143 00	cover		1	
4	* 928 113 445 00	filter cartridge		1	
5	928 624 051 00	adjusting motor	-90	1	
6	928 575 527 00	linkage	-90	1	
7	928 624 333 00	protective cap	-90	1	
8	928 618 418 00	control unit		1	
9	928 575 951 01	adjusting flaps	-90	1	
(9)	928 575 351 02	air duct	91-	1	
10	928 618 421 00	output final stage		1	
11	N 011 524 7	washer A 6,4	-90	3	
12	928 575 053 00	crank	-90	1	
13	999 084 045 02	lock nut	-90	1	
14	N 010 215 13	hexagon-head bolt	-90	3	
15	999 168 021 40	ball socket	-90	2	
17	999 507 330 02	nut lock		X	
18	N 044 734 1	pan-head screw		X	
19	928 575 521 01	air duct	-90	1	
20	N 013 957 5	tapping screw		X	
21	N 900 488 01	speed nut		X	
22	N 014 133 8	oval-head screw		1	
23	928 616 982 00	retainer spring		1	
24	N 011 521 3	washer		X	
25	999 167 033 00	ball pin	-90	1	
26	N 011 522 15	washer	-90	2	

Pos	Part Number	Name	Remarks	Qty	Model	Pos	Part Number	Name	Remarks	Qty	Model
27	900 084 020 02	lock nut M 4	-90	1							
28	928 106 271 02	sealing strip		1							
29	N 011 004 6	hexagon nut M 4	-90	2							
30	N 011 666 7	washer B 6,4		6							
31	900 910 012 02	lock nut M 6		6							
32	944 612 450 00	support	-90	1							
-	999 591 981 02	retaining clip		2							
		- -- E N D -- -									

Model	Year	MG	SG	Illustration	Restrictions	Update	15:31	02.09.2004	PORSCHE	PET	PORSCHE
928	91	1	06	106-00		179					

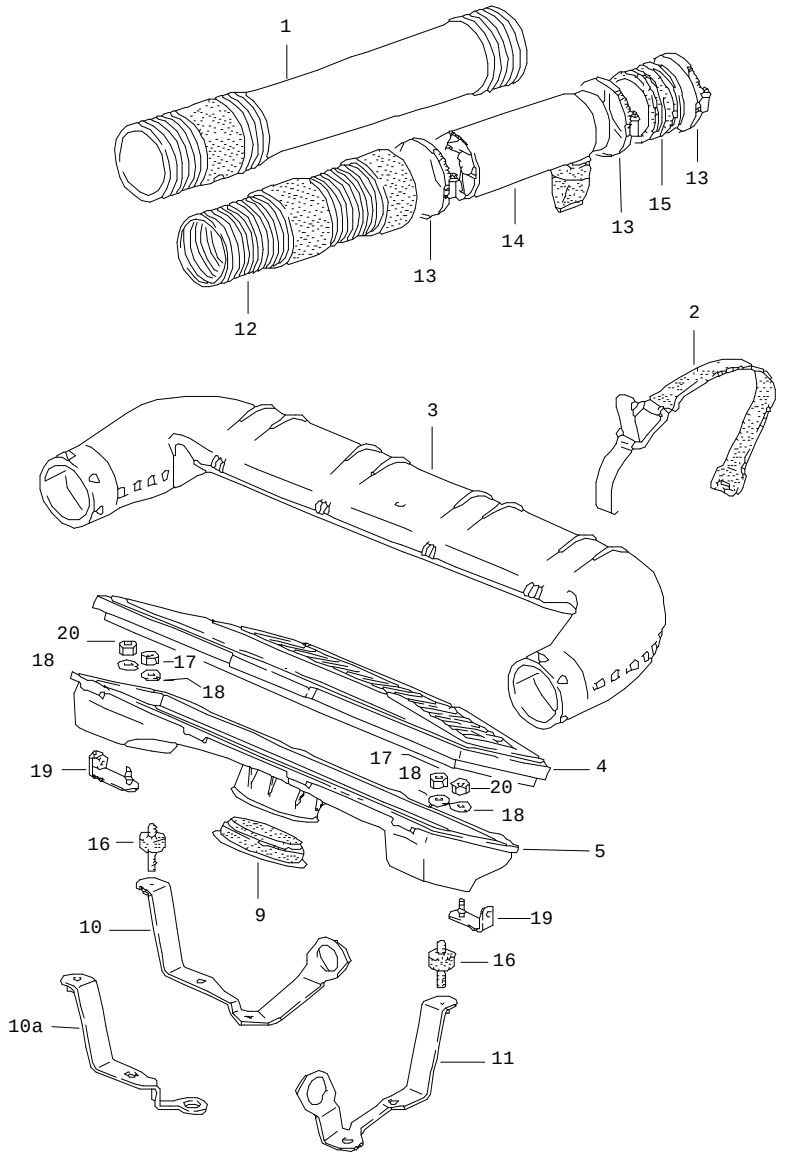

Pos	Part Number	Name	Remarks	Qty	Model
		air cleaner lh-jetronic			M28.41/42/47
1	928 110 272 04	suction hose		2	
(1)	928 110 272 13	suction hose	87	2	M28.41/42 (CH)
(1)	928 110 272 13	suction hose	88-89	2	M28.41
(1)	928 110 272 13	suction hose	90-	2	M28.42/47 (CH)
2	928 110 363 06	restraining strap		4	
3	928 110 230 06	air cleaner upper part		1	
(3)	928 110 230 06	air cleaner upper part	CH 90-	1	M28.47 (CH)
4	* 928 110 185 03	air cleaner cartridge		1	
5	A 928 110 229 05	air cleaner lower part	87	1	
(5)	928 110 229 05	air cleaner lower part	88-	1	
9	928 110 132 00	hose		1	
10	928 110 145 03	support	87	1	
10A	928 110 146 01	support	88-	1	
11	928 110 525 07	support	87	1	
(11)	928 110 526 00	support	88-	1	
12	928 110 272 05	suction hose		2	M 317
13	999 512 350 02	hose clamp		6	M 317
14	928 110 274 01	sand separator		2	M 317
15	928 110 347 00	rubber sleeve		2	M 317
16	931 110 191 00	bonded rubber buffer		2	
17	900 910 010 02	lock nut		2	
18	N 011 666 7	washer		4	

Pos	Part Number	Name	Remarks	Qty	Model	Pos	Part Number	Name	Remarks	Qty	Model
19	928 111 011 00	support		2							
20	900 910 010 02	lock nut		2							
		- -- E N D -- -									

Model	Year	MG	SG	Illustration	Restrictions	Update				
928	91	1	07	107-00		179	15:31	02.09.2004	PORSCHE	PET	PORSCHE

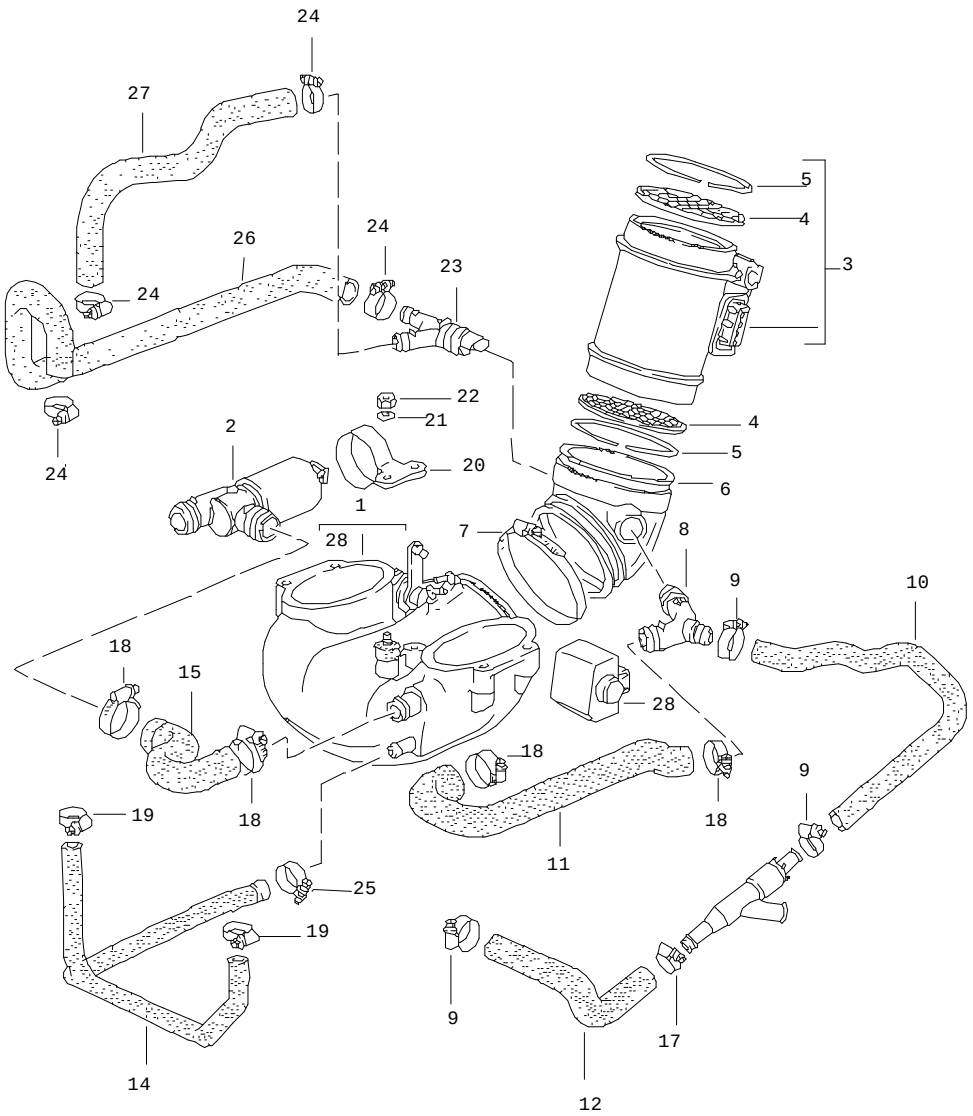

Pos	Part Number	Name	Remarks	Qty	Model
		lh-jetronic 1			M28.41/42/47
1	A 928 110 093 03	throttle body	87	1	
1	928 110 093 03	throttle body		1	
2	928 606 161 01	idle-speed adjuster		1	
3	> 928 606 141 00	mass air flow		1	
4	928 110 901 00	strainer		2	
5	928 110 902 00	circlip		2	
6	928 110 222 01	air-guide cowl		1	
7	999 512 350 02	hose clamp		2	
8	928 110 689 01	connecting piece		1	
9	999 512 554 00	hose clamp		3	
10	928 110 224 00	hose		1	
11	A 928 110 174 09	hose	87	1	
11	928 110 174 09	hose	88-	1	
12	928 110 220 00	hose		1	
14	928 107 603 00	hose		1	
15	928 110 633 00	hose		1	
16	A 999 512 381 02	clamp		1	
16	999 512 497 02	clamp		1	
17	999 512 457 00	clamp		1	
18	999 512 374 02	hose clamp		4	
19	N 023 570 2	hose clamp		1	
20	928 110 543 01	support		1	
21	N 011 524 7	washer		2	
22	900 076 010 02	hexagon nut		2	
23	928 110 690 01	connecting piece		1	
24	999 512 346 02	hose clamp		4	

Model	Year	MG	SG	Illustration	Restrictions	Update			
928	91	1	07	107-00		179	15:31	02.09.2004	PORSCHE PET PORSCHE

Pos	Part Number	Name	Remarks	Qty	Model	Pos	Part Number	Name	Remarks	Qty	Model
25	999 512 554 00	hose clamp		1							
26	928 107 313 02	hose		1							
27	928 110 432 01	hose		1							
28	928 606 157 00	throttle-valve switch		1							
		- -- E N D -- -									

Model	Year	MG	SG	Illustration	Restrictions	Update				
928	91	1	07	107-05		179	15:31	02.09.2004	PORSCHE	PET	PORSCHE

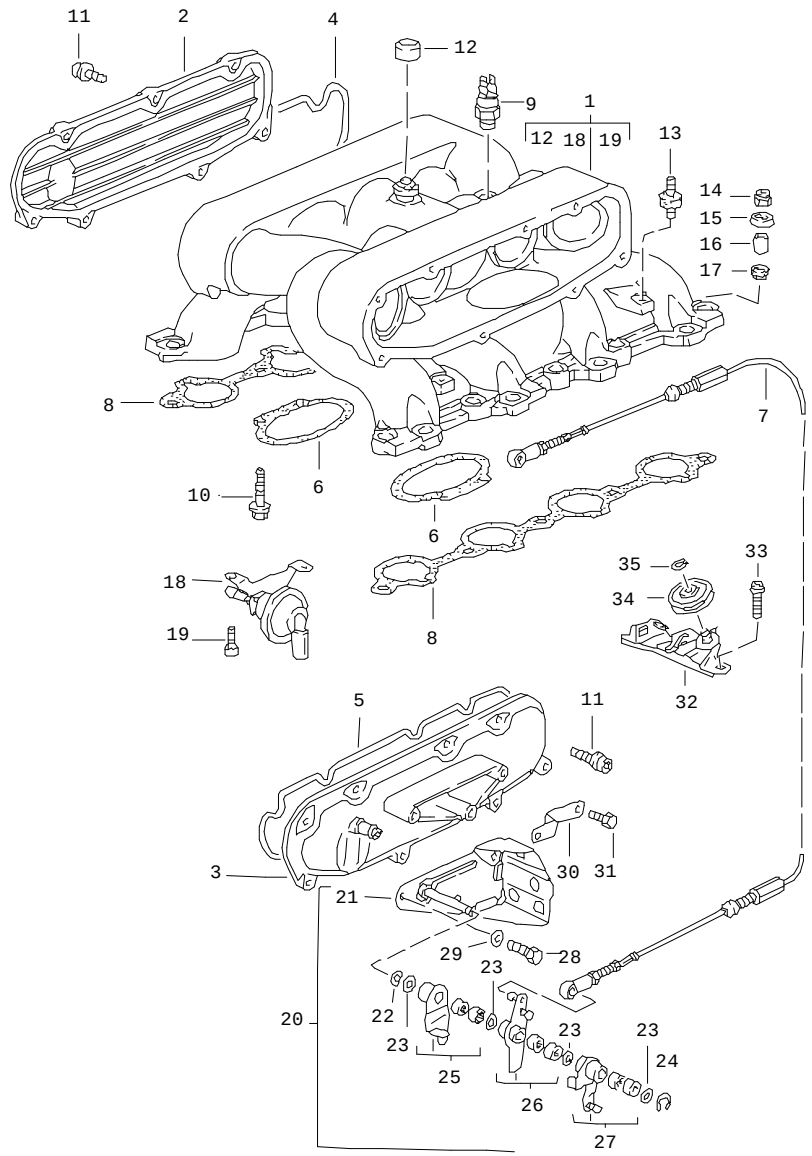

Pos	Part Number	Name	Remarks	Qty	Model
		lh-jetronic 2			M28.41/42/47
1	928 110 228 02	intake distributor	-89	1	M28.41/42
(1)	928 110 228 02	intake distributor	89- AUT. 90-	1	M28.47 M28.42
-	928 110 650 00	bush		2	
-	928 110 658 01	torsion spring		1	
-	N 012 439 2	lock		1	
		for flap			
2	928 110 711 00	cover		1	
3	928 110 232 00	cover		1	
4	* 928 110 713 01	gasket		1	
(4)	A 928 110 713 01	gasket		1	
5	* 928 110 714 01	gasket		1	
(5)	A 928 110 714 01	gasket		1	
6	* 928 110 637 02	gasket		2	
7	928 110 626 01	bowden control		1	
8	* 928 110 580 02	gasket		2	
9	928 606 217 00	temperature switch		1	
10	900 074 321 0A	hexagon-head bolt M 8 X 40		4	
11	900 067 270 0A	pan-head screw M 6 X 25		16	
12	928 110 430 01	cap		1	
13	931 110 191 00	bonded rubber buffer		4	
14	900 910 022 02	lock nut		10	
15	928 110 693 00	thrust washer		10	
16	928 110 698 01	spacer sleeve		10	
17	* 928 110 694 01	thrust ring		10	

Pos	Part Number	Name	Remarks	Qty	Model
18	928 110 160 00	vacuum unit		1	
19	900 067 269 0A	pan-head screw M 6 X 16		2	
20	928 110 627 02	bracket		1	
21	928 110 677 02	bracket		1	
22	928 110 741 01	spring washer		1	
23	999 234 024 00	thrust washer		4	
24	900 116 005 02	lock washer		1	
25	928 110 696 00	reverse lever		1	
26	928 110 695 00	actuating lever		1	
27	928 110 697 00	reverse lever		1	
28	900 075 128 02	screw M 8 X 20		3	
29	900 031 025 0A	washer 8,4		3	
30	928 110 670 00	support		1	
31	999 072 005 09	hexagon-head bolt		1	
32	928 110 640 02	bracket	88-	1	
33	900 067 271 09	screw M 8 X 20 Z 1		2	
34	928 110 642 01	deflection roller		1	
35	N 012 408 2	circlip 8 X 0,8		1	
		- -- E N D -- -			

Pos	Part Number	Name	Remarks	Qty	Model

Model	Year	MG	SG	Illustration	Restrictions	Update	15:31	02.09.2004	PORSCHE	PET	PORSCHE
928	91	1	07	107-10		179					

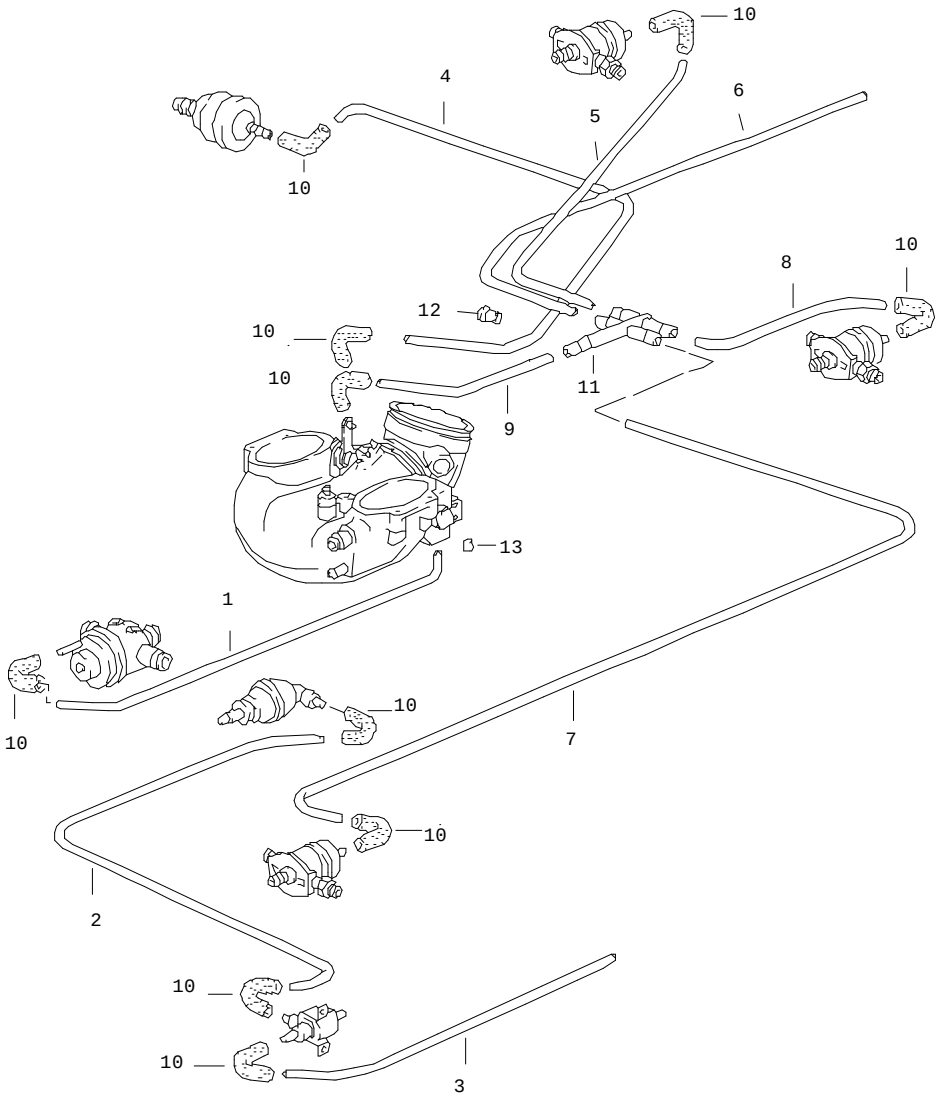

Pos	Part Number	Name	Remarks	Qty	Model
		lh-jetronic 3			M28.41/42/47
-	N 020 139 1	hose 4 X 1 500 MM 300 MM 800 MM 720 MM 220 MM 450 MM 605 MM 220 MM	 AUT.	* 1 1 1 1 1 1 1 1	 M28.42
9	928 110 014 01	pipeline		1	
10	928 574 717 02	hose		X	
11	928 110 441 03	distributing piece		1	M28.41/47
(11)	928 110 441 02	distributing piece	AUT.	1	M28.42
12	900 312 012 02	plug		1	
13	930 110 292 00	plug		X	
		- -- E N D -- -			

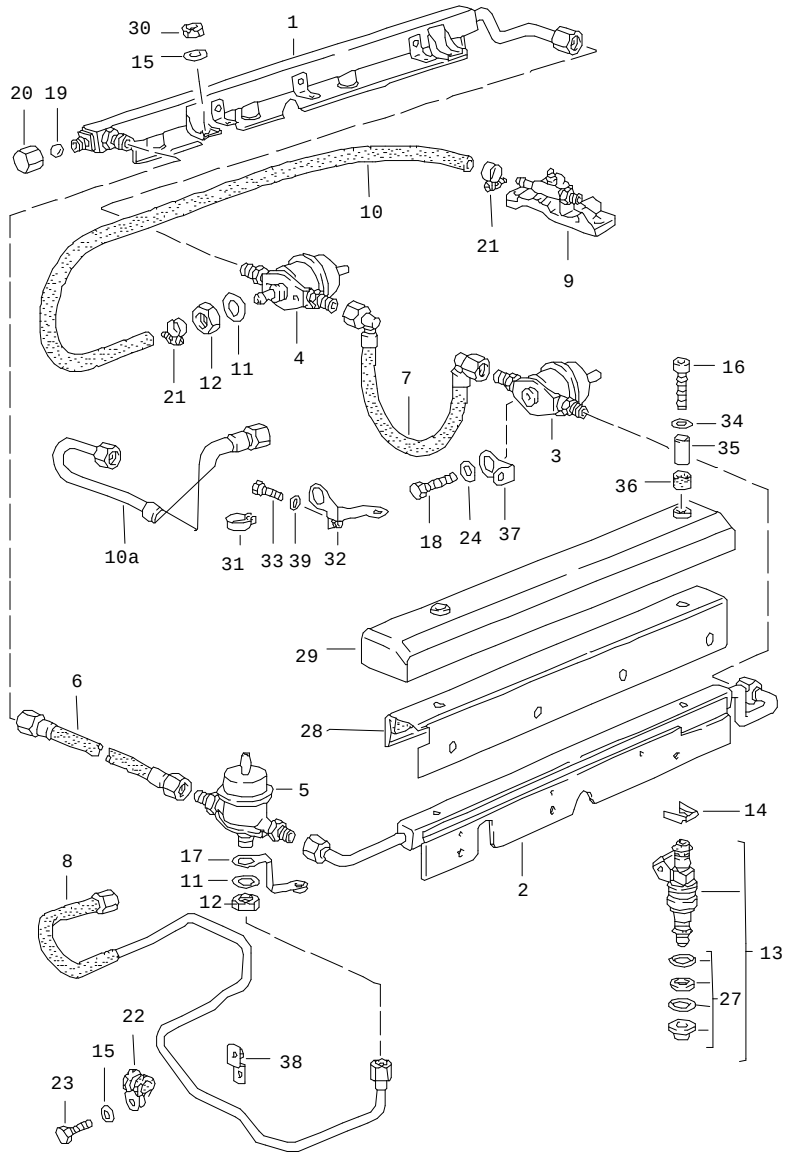

Pos	Part Number	Name	Remarks	Qty	Model
		lh-jetronic 4			M28.41/42/47
1	A 928 110 080 17	injection tube	/R 87	1	
1	928 110 080 17	injection tube	/R 88-	1	
2	A 928 110 079 17	injection tube	/L 87	1	
2	928 110 079 17	injection tube	/L 88-	1	
3	930 110 602 01	diaphragm damper		1	
4	928 110 198 02	pressure regulator	87	1	
(4)	928 110 198 04	pressure regulator	88-90	1	
(4)	928 110 198 04	pressure regulator	91	1	
5	928 110 202 01	diaphragm damper		1	
6	928 110 269 01	fuel hose		1	
7	928 110 271 02	fuel hose		1	
8	928 110 367 15	fuel line feed line		1	
9	928 110 640 01	bracket	87	1	
10	928 110 359 04	hose elbow	87	1	
10A	928 110 359 08	fuel line return	-89	1	
10A	928 110 359 08	fuel line return	90-	1	
11	900 025 020 02	washer A 17		2	
12	900 034 013 02	hexagon nut M 16 X 1,5		2	
13	928 606 119 02	injector valve		8	
14	930 110 388 00	retaining clip		8	
15	N 011 524 7	washer A 6,4		5	
16	900 067 117 0A	hexagon socket head bolt M 6 X 16		4	

Pos	Part Number	Name	Remarks	Qty	Model
17	928 110 525 04	support		1	
18	N 010 237 6	hexagon-head bolt M 8 X 12		1	
19	900 108 022 00	ball 9 MM		1	
20	928 110 475 01	cap nut M 12 X 1,5		1	
21	999 512 160 02	hose clamp S 13/9		2	
22	999 511 116 02	clamp		1	
23	999 072 005 09	hexagon-head bolt M 6 X 12		1	
24	944 110 312 00	washer		1	
27	* 928 110 904 00	gasket set for injector valve		8	
28	928 110 017 00	cover	/L	1	
(28)	928 110 018 00	cover	/R	1	
29	A 928 110 017 00	cover	/L	1	
29	928 110 017 00	cover	/L	1	
(29)	A 928 110 018 00	cover	/R	1	
(29)	928 110 018 00	cover	/R	1	
30	900 076 010 02	hexagon nut M 6		4	
31	999 511 191 02	clip 8 / 12	88-	1	
32	928 110 145 04	support	88-		
33	900 075 361 02	hexagon-head bolt M 5 X 12		1	
34	900 151 006 0A	washer B 6,4		4	
35	928 110 765 00	guide sleeve		4	
36	999 702 153 40	rubber sleeve		4	
37	928 110 525 08	support	88-	1	
38	928 110 278 01	support		1	
39	N 011 556 2	washer A 5,3		1	

- -- E N D -- -

Model	Year	MG	SG	Illustration	Restrictions	Update	15:32	02.09.2004	PORSCHE	PET	PORSCHE
928	91	1	08	108-00		179					

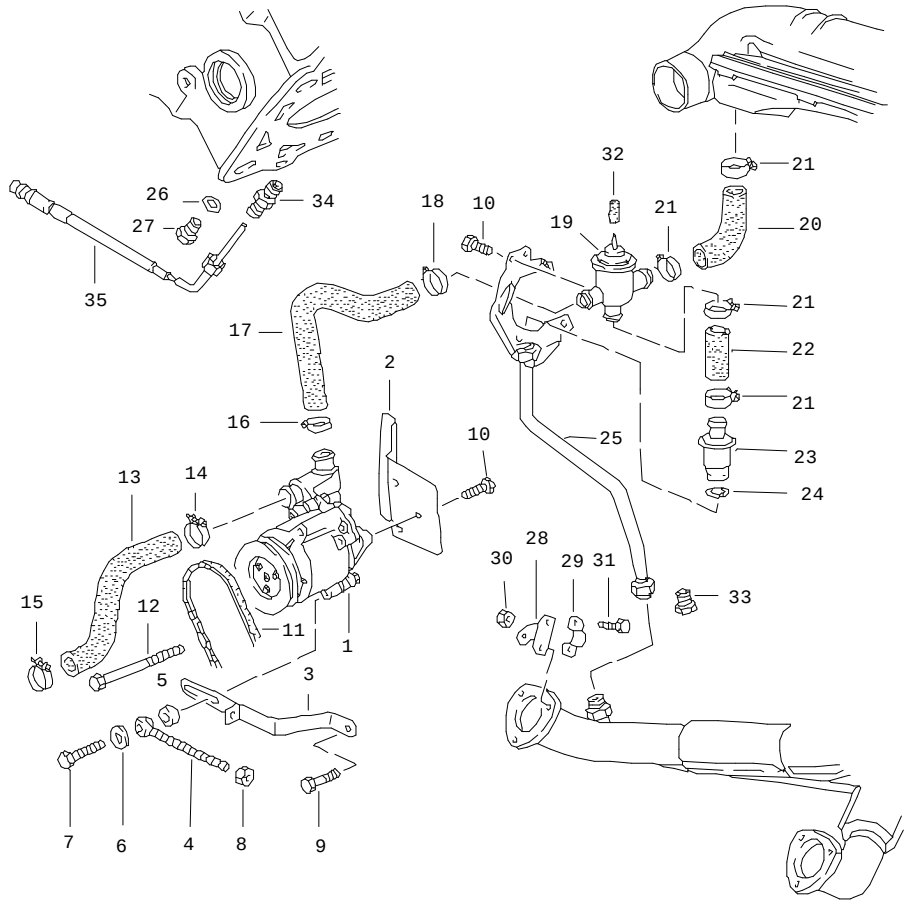

Pos	Part Number	Name	Remarks	Qty	Model
		air injection for cars with catalytic converter			M28.41/42/47
1	928 113 017 00	air pump		1	
2	928 113 125 05	cover plate		1	
3	928 113 113 10	strut		1	
4	999 460 002 02	eye screw		1	
5	999 025 075 02	washer 8,5 X 19 X 6		1	
6	900 025 007 02	washer A 8,4		2	
7	N 010 340 6	hexagon-head bolt M 8 X 40		1	
8	900 076 025 02	hexagon nut M 8		1	
9	900 075 079 02	hexagon-head bolt M 8 X 22		1	
10	900 075 357 02	screw M 6 X 12		5	
11	999 192 306 50	narrow v-belt 12,5 X 925		1	
12	900 074 049 02	screw M 8 X 110		1	
13	928 113 155 02	hose		1	
14	999 512 044 02	hose clamp		1	
15	999 512 358 02	hose clamp		1	
16	999 512 038 02	hose clamp		1	
17	928 113 139 10	hose		1	
18	999 512 552 00	hose clamp		1	
19	930 113 147 01	diverter valve		1	
20	928 113 159 03	hose		1	
21	999 512 237 02	hose clamp		4	

Pos	Part Number	Name	Remarks	Qty	Model
22	928 113 140 07	hose		1	
23	911 113 115 01	check valve		1	
24	900 123 060 30	sealing ring A 24 X 29		1	
25	928 113 146 04	pipeline		1	
26	900 123 043 30	sealing ring A 12 X 15,5		8	
27	900 124 008 02	screw plug M 12 X 1,5		8	
28	928 113 215 02	support		1	
29	999 512 329 02	clip		1	
30	N 011 005 14	hexagon nut M 5		2	
31	N 010 205 6	hexagon-head bolt M 5 X 10		2	
32	911 110 297 00	plug		1	M 900
33	928 113 216 00	screw plug		1	M 900
34	928 606 255 00	adapter	89-	2	
35	928 606 155 02	temperature sensor cyl. 4 and cyl. 8	89-90	2	
35	928 606 155 02	temperature sensor cyl. 3 and cyl. 7	91-	2	
		- -- E N D -- -			

Pos	Part Number	Name	Remarks	Qty	Model

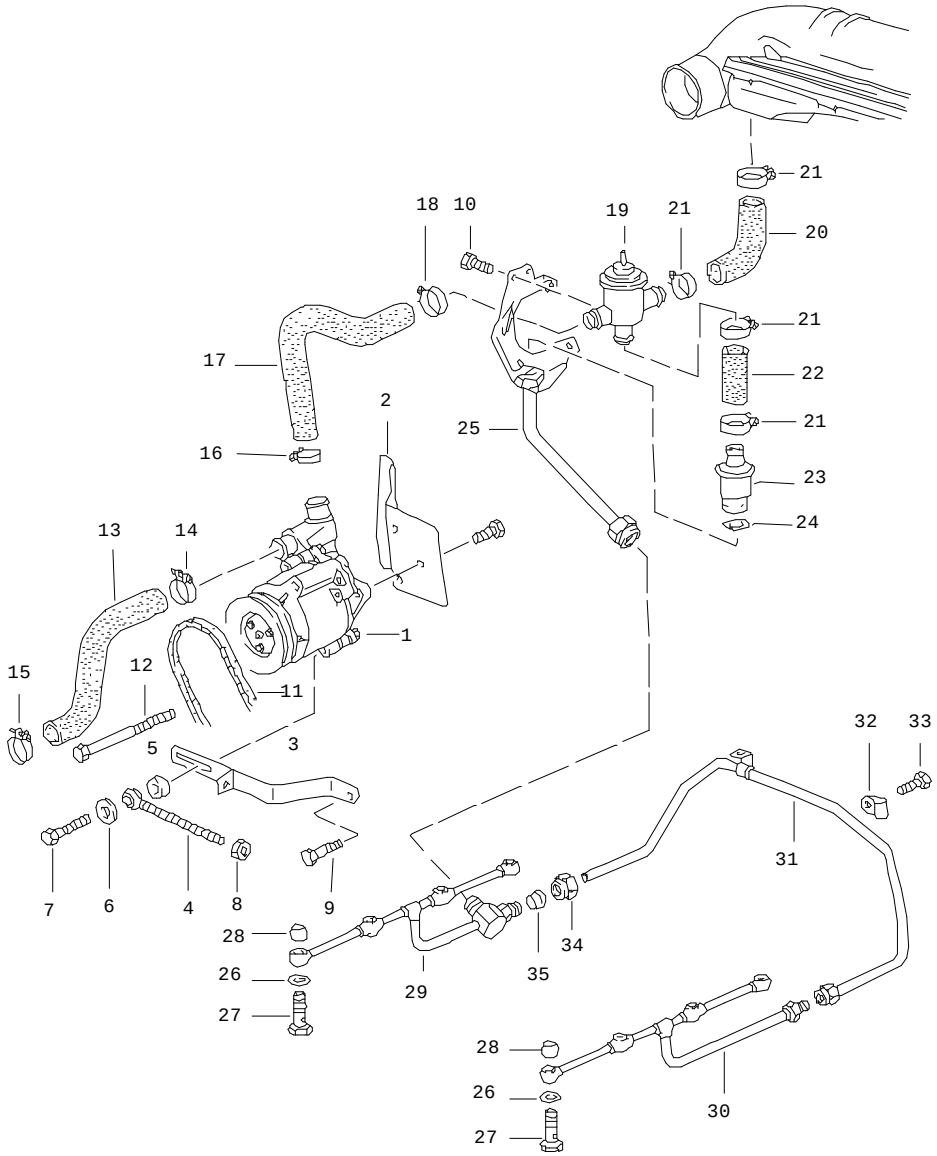

Pos	Part Number	Name	Remarks	Qty	Model
		air injection for cars without catalytic converter			M28.41/42/47
1	928 113 017 00	air pump		1	
2	928 113 125 05	cover plate		1	
3	928 113 113 10	strut		1	
4	999 460 002 02	eye screw		1	
5	999 025 075 02	washer 8,5 X 19 X 6		1	
6	900 025 007 02	washer A 8,4		2	
7	N 010 340 6	hexagon-head bolt M 8 X 40		1	
8	900 076 025 02	hexagon nut M 8		1	
9	900 075 079 02	hexagon-head bolt M 8 X 22		1	
10	900 075 357 02	screw M 6 X 12		5	
11	999 192 306 50	narrow v-belt 12,5 X 925		1	
12	900 074 049 02	screw M 8 X 110		1	
13	928 113 155 02	hose		1	
14	999 512 044 02	hose clamp		1	
15	999 512 358 02	hose clamp		1	
16	999 512 038 02	hose clamp		1	
17	928 113 139 10	hose		1	
18	999 512 552 00	hose clamp		1	
19	930 113 147 01	diverter valve		1	
20	928 113 159 03	hose		1	
21	999 512 237 02	hose clamp		4	

Pos	Part Number	Name	Remarks	Qty	Model	Pos	Part Number	Name	Remarks	Qty	Model
22	928 113 140 07	hose		1							
23	911 113 115 01	check valve		1							
24	900 123 060 30	sealing ring A 24 X 29		1							
25	928 113 146 05	pipeline		1							
26	900 123 043 30	sealing ring A 12 X 15,5		X							
27	999 134 039 02	banjo bolt		X							
28	999 209 003 30	sleeve 12,2 X 18		X							
29	928 113 123 01	distributor line cyl. 1 - 4		1							
30	928 113 123 02	distributor line cyl. 5 - 8		1							
31	928 113 135 05	connecting line		1							
32	999 511 171 02	clip		1							
33	900 075 358 02	hexagon-head bolt M 8 X 20		1							
34	900 104 020 02	union nut		1							
35	N 020 823 1	cutting ring		1							
		- -- E N D -- -									

Model	Year	MG	SG	Illustration	Restrictions	Update				
928	91	1	09	109-00		179	15:32	02.09.2004	PORSCHE	PET	PORSCHE

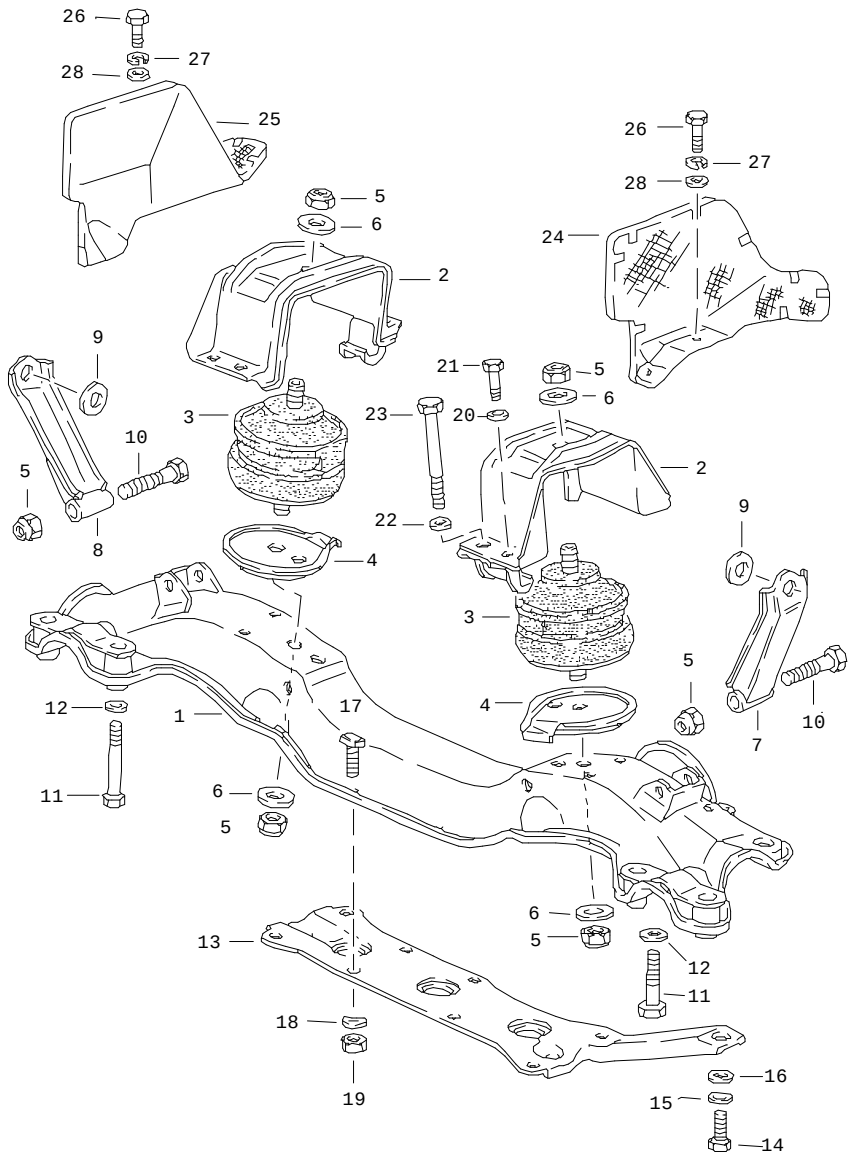

Pos	Part Number	Name	Remarks	Qty	Model
		engine suspension			M28.41/42/47
1	928 375 011 06	engine carrier	/LL	1	
(1)	927 375 011 06	engine carrier	/RL	1	
2	928 375 069 01	engine bracket		2	
3	928 375 039 00	hydraulic mount		2	
4	928 375 371 00	stop plate		2	
5	900 910 046 02	lock nut M 12 X 1,5		4	
6	999 025 091 02	washer		4	
7	928 375 063 00	bracket	/L	1	
8	928 375 064 00	bracket	/R	1	
9	928 375 211 00	washer		2	
10	N 010 156 3	hexagon-head bolt M 12 X 1,5 X 70		2	
11	N 010 455 3	screw M 10 X 55		2	
12	928 375 212 00	washer		2	
13	928 375 019 00	reinforcement plate	/LL	1	
(13)	927 375 021 02	reinforcement plate	/RL	1	
14	900 075 043 02	hexagon-head bolt M 10 X 30	/LL	1	
14	900 075 043 02	hexagon-head bolt M 10 X 30	/RL	2	
15	900 025 008 09	washer B 10	/LL	1	
15	900 025 008 09	washer B 10	/RL	2	
16	900 223 011 02	washer B 10,5	/LL	1	
16	900 223 011 02	washer B 10,5	/RL	2	
17	928 375 125 00	t-headed screw		4	

Pos	Part Number	Name	Remarks	Qty	Model	Pos	Part Number	Name	Remarks	Qty	Model
18	N 012 241 8	spring washer B 8		4							
19	900 910 022 02	lock nut M 8		4							
20	900 025 007 02	washer A 8,4		4							
21	N 010 335 5	hexagon-head bolt M 8 X 35		4							
22	052 103 377	washer		4							
23	N 010 482 3	hexagon-head bolt M 10 X 105		4							
24	928 375 067 01	cover plate	/L	1							
25	928 375 068 01	cover plate	/R	1							
26	900 075 057 02	hexagon-head bolt M 6 X 16		4							
27	N 012 006 4	lock ring B 6		4							
28	900 223 003 02	washer 6,4		4							
		- -- E N D -- -									

Model	Year	MG	SG	Illustration	Restrictions	Update		
928	91	1	98	REP		179	16:19	02.09.2004

Pos	Part Number	Name	Remarks	Qty	Model
		repair kits			M28.41/42/47
>>	> 928 100 901 03	set of seals engine comprising:		1	M28.41/42/47
-	900 123 118 30	sealing ring A 22 X 27		1	
-	999 113 275 40	shaft seal A 20 X 30 X 7		1	
-	900 123 007 30	sealing ring A 14 X 18		1	
-	900 123 149 70	sealing ring A 22 X 29		1	
-	900 123 115 30	sealing ring A 8 X 11,5		1	
-	900 123 055 30	sealing ring A 12 X 16		1	
-	900 123 060 30	sealing ring A 24 X 29		2	
-	900 123 143 70	sealing ring A 48 X 55		1	
-	928 104 601 07	valve stem seal		32	
-	928 101 207 00	oil sump gasket		1	
-	928 104 367 05	cylinder head gasket cyl. 1 - 4		1	
-	928 104 368 05	cylinder head gasket cyl. 5 - 8		1	
-	928 106 134 05	gasket		1	
-	928 106 227 00	gasket		2	
-	928 107 136 04	sealing ring		1	
-	928 107 307 00	gasket D 3		1	
-	999 701 846 40	o-ring		1	
-	944 111 205 00	sealing ring		8	
-	928 606 213 03	gasket		1	
-	928 110 132 00	hose		1	
-	999 113 264 40	radial sealing ring 90 X 110 X 12		1	
-	928 603 135 03	sealing ring		1	

Model	Year	MG	SG	Illustration	Restrictions	Update		
928	91	1	98	REP		179	16:19	02.09.2004

Pos	Part Number	Name	Remarks	Qty	Model
-	999 113 263 40	shaft seal 60 X 85 X 10		1	
-	999 113 282 40	shaft seal		2	
-	999 701 633 40	o-ring 98 X 3		1	
-	928 107 169 01	gasket		1	
-	999 701 627 40	o-ring 53 X 7		1	
-	999 701 632 40	o-ring 65 X 5		1	
-	N 043 811 1	sealing ring C 38 X 44		2	
-	928 105 215 00	cover		6	
-	928 106 167 01	gasket		2	
-	999 701 731 40	o-ring		22	
-	900 123 050 30	sealing ring		6	
-	928 104 447 09	gasket		2	
-	928 104 443 08	sealing ring		8	
-	900 174 044 40	round seal		1	
-	928 105 262 00	pin		5	
-	928 110 713 01	gasket		1	
-	928 110 714 01	gasket		1	
-	928 110 637 02	gasket		2	
-	928 110 580 02	gasket		2	
-	928 110 694 01	thrust ring		10	
-	900 123 144 30	sealing ring		12	
-	928 105 611 05	gasket		1	
-	000 043 204 45	sleeve		2	
>>	> 928 104 903 01	set of seals cylinder head comprising:		1	M28.41/42/47
-	928 104 367 05	cylinder head gasket		1	
-	928 104 368 05	cylinder head gasket		1	
-	928 105 215 00	cover		2	

Model	Year	MG	SG	Illustration	Restrictions	Update		
928	91	1	98	REP		179	16:19	02.09.2004

Pos	Part Number	Name	Remarks	Qty	Model
-	928 105 205 00	support		2	
-	900 123 050 30	sealing ring		8	
-	999 113 282 40	shaft seal		2	
-	944 111 205 00	sealing ring		8	
-	928 110 580 02	gasket		2	
-	900 123 144 30	sealing ring		12	
-	928 104 443 08	sealing ring		8	
-	928 104 447 09	gasket		2	
-	928 106 227 00	gasket		2	
-	000 043 204 45	sleeve		5	
>>	> 928 101 901 08	set of crankshaft bearings 1 set comprising:		1	M28.41/42/47
-	928 101 115 02 002	main bearing shell		3	
-	928 101 115 03 002	main bearing shell		3	
-	928 101 142 03 002	thrust bearing		2	
-	928 101 117 08	main bearing bush i		1	
>>	> 928 101 901 58	set of crankshaft bearings 1 set undersize 0,25 mm comprising:		1	M28.41/42/47
-	928 101 115 50	main bearing shell		3	
-	928 101 115 51	main bearing shell		3	
-	928 101 142 54	thrust bearing		2	
-	928 101 117 58	main bearing bush i		1	
>>	> 928 101 901 68	set of crankshaft bearings 1 set undersize 0,50 mm comprising:		1	M28.41/42/47
-	928 101 115 60	main bearing shell		3	
-	928 101 115 61	main bearing shell		3	
-	928 101 142 64	thrust bearing		2	

Model	Year	MG	SG	Illustration	Restrictions	Update		
928	91	1	98	REP		179	16:19	02.09.2004

Pos	Part Number	Name	Remarks	Qty	Model
-	928 101 117 68	main bearing bush i		1	
>>	> 928 100 931 07	maintenance set for periodic maintenance comprising:		1	M28.41/42/47
-	999 170 156 90	spark plug		8	
-	928 107 201 05	oil filter		1	
-	900 123 011 30	sealing ring		1	
-	928 110 253 06	fuel filter		1	
-	928 110 185 03	air cleaner cartridge		1	
-	928 113 445 00	filter cartridge		1	
>>	> 928 100 931 08	maintenance set for periodic maintenance comprising:	89-	1	M28.41/42/47
-	999 170 156 90	spark plug		8	
-	928 107 201 05	oil filter		1	
-	900 123 011 30	sealing ring		1	
-	928 110 185 03	air cleaner cartridge		1	
>>	> 928 103 906 22	set of piston rings 100,00 MM		X	M28.41/42/47
>>	> 928 103 906 23	set of piston rings 100,50 MM		X	M28.41/42/47
>>	> 000 043 202 60	subsequent installation for AU		1	M28.41/42/47 (D)
		- -- E N D -- -			

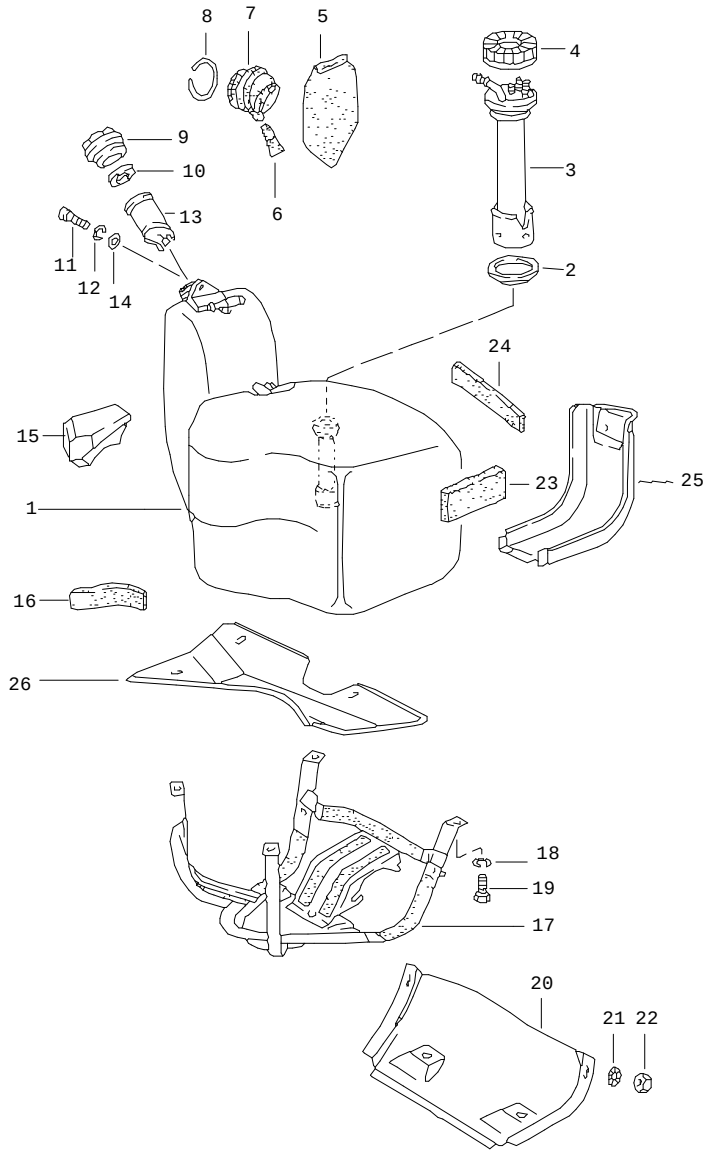

Pos	Part Number	Name	Remarks	Qty	Model
		fuel tank			
1	928 201 003 05	fuel tank		1	
1	A 928 201 003 04	fuel tank use also: POS.13 for (USA)(CDN) M 298/ M 299		1	
1	928 201 003 08	fuel tank use also: POS.13 for (USA)(CDN) M 298/ M 299		1	
2	928 201 327 02	gasket		1	
3	928 641 030 01	tank gauge fuel tank	-88	1	
3	928 641 030 02	tank gauge fuel tank	89-	1	
4	A 113 201 375	union nut		1	
4	113 201 375	union nut		1	
	01C	black			
5	928 201 057 02	protective flap		1	
6	928 201 255 02	drain bush		1	
7	928 201 333 02	grommet		1	
8	900 906 046 00	outer ring		1	
9	928 201 901 03	fuel tank cap with stipulated lock-no. state lock number		1	
(9)	928 201 903 02	fuel tank cap w/o stipulated lock number		1	
10	928 201 275 03	sealing ring		1	
11	N 014 707 2	pan-head screw M 8 X 15		1	
12	900 142 002 01	lock ring A 8		1	

Pos	Part Number	Name	Remarks	Qty	Model
13	928 201 027 03	insert		1	
14	900 025 007 02	washer A 8,4		1	
15	928 201 107 02	desk pad		1	
-	999 911 227 40	strap 210 MM		* 1	
17	A 928 201 313 06	tank covering	87	1	
(17)	928 201 313 06	tank covering	88-	1	
18	900 027 015 02	lock ring B 8		X	
19	N 010 246 4	hexagon-head bolt M 8 X 45		X	
20	928 201 145 03	cover		1	
21	N 042 121 3	shake-proof washer A 6,4		2	
22	900 076 010 02	hexagon nut M 6		4	
23	928 201 345 02	spacer		1	
-	999 911 227 40	strap 290 MM		* 1	
25	928 201 373 03	cover		1	
26	928 201 059 03	cover		1	
		- -- E N D -- -			

Pos	Part Number	Name	Remarks	Qty	Model

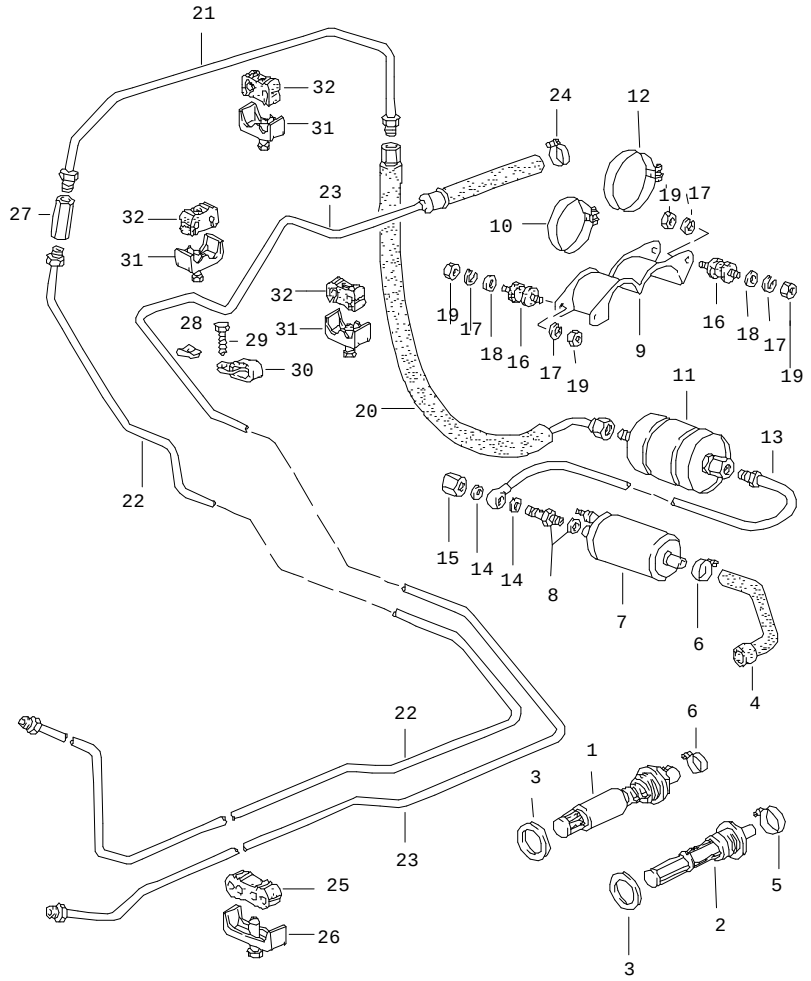

Pos	Part Number	Name	Remarks	Qty	Model
		fuel system			
1	928 608 013 00	in-tank fuel pump		1	M 460
2	928 201 081 04	fuel strainer M 37 X 1,5 for cars without in-tank fuel pump	-88	1	
3	928 201 187 02	sealing ring		1	
4	928 356 550 04	fuel hose		1	M 460
4	928 356 550 05	fuel hose	-88	1	
5	999 512 346 00	hose clamp A 20/9		1	
6	999 512 554 00	hose clamp A 18/9	-88	1	
6	999 512 554 00	hose clamp A 18/9		2	M 460
7	928 608 104 02	fuel pump	-88	1	
(7)	928 608 104 03	fuel pump	89-	1	
8	893 906 093	retaining valve		1	
9	928 356 151 01	support		1	
10	999 512 394 00	hose clamp		1	
11	928 110 253 04	fuel filter		1	(AG)(SA)
11	928 110 253 06	fuel filter		1	
12	999 512 276 02	clip		1	
13	928 356 063 10	fuel line		1	
14	900 123 005 20	sealing ring A 12 X 16		2	
15	928 110 475 01	cap nut		1	
16	944 610 115 00	bonded rubber mounting		6	
17	N 012 006 4	lock ring B 6		12	
18	N 011 666 7	washer B 6,4		9	

Pos	Part Number	Name	Remarks	Qty	Model	Pos	Part Number	Name	Remarks	Qty	Model
19	900 076 010 02	hexagon nut M 6		12							
20	928 356 053 01	fuel line		1							
20	928 356 053 01	fuel line		1							
21	928 356 057 00	fuel line		1							
22	928 356 029 10	fuel line to engine compartment		1							
23	928 356 031 05	fuel line return to tank		1							
24	N 023 569 2	hose clamp AR 16/9		1							
25	928 356 551 01	rubber mounting		6							
26	928 356 553 00	supporting bow		5							
27	477 209 169	connecting piece		1							
28	999 591 487 02	speed nut		1							
29	900 187 115 02	screw									
30	999 511 085 02	clamp		1							
31	928 356 555 00	clamp		X							
32	928 356 525 01	rubber mounting		X							
		- -- E N D -- -									

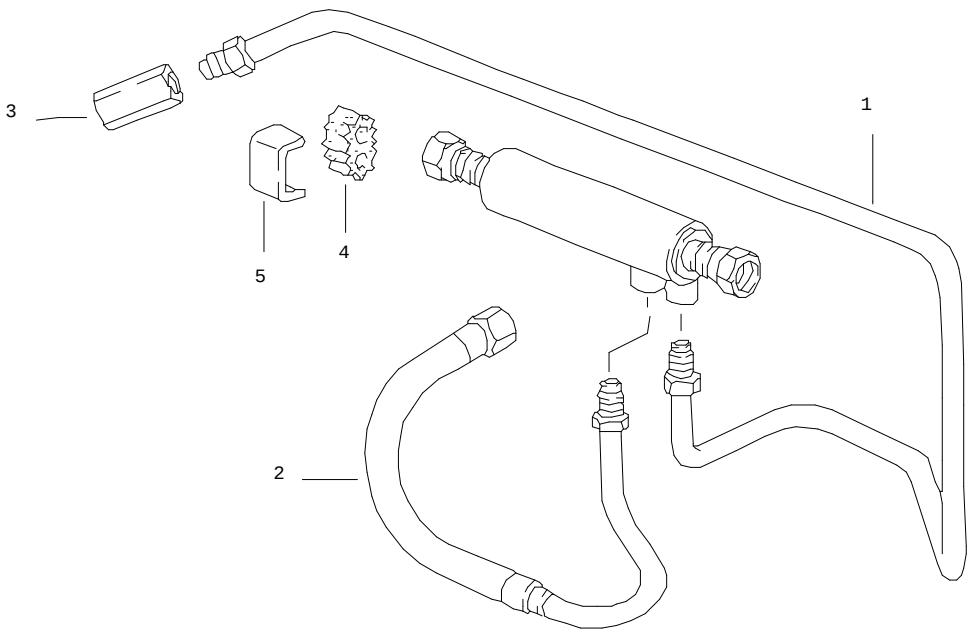

Pos	Part Number	Name	Remarks	Qty	Model
		fuel cooler			
1	928 356 185 01	return line	87	1	
(1)	928 356 185 03	return line	88-	1	
(1)	928 356 189 00	return line	88-	1	M 637
2	928 356 081 04	fuel supply line see group 1/07/15 AB MOD. 88-	87	1	
3	477 209 169	connecting piece		1	
4	928 356 525 00	rubber mounting		2	
5	928 356 527 00	supporting bow		2	
		- -- E N D -- -			

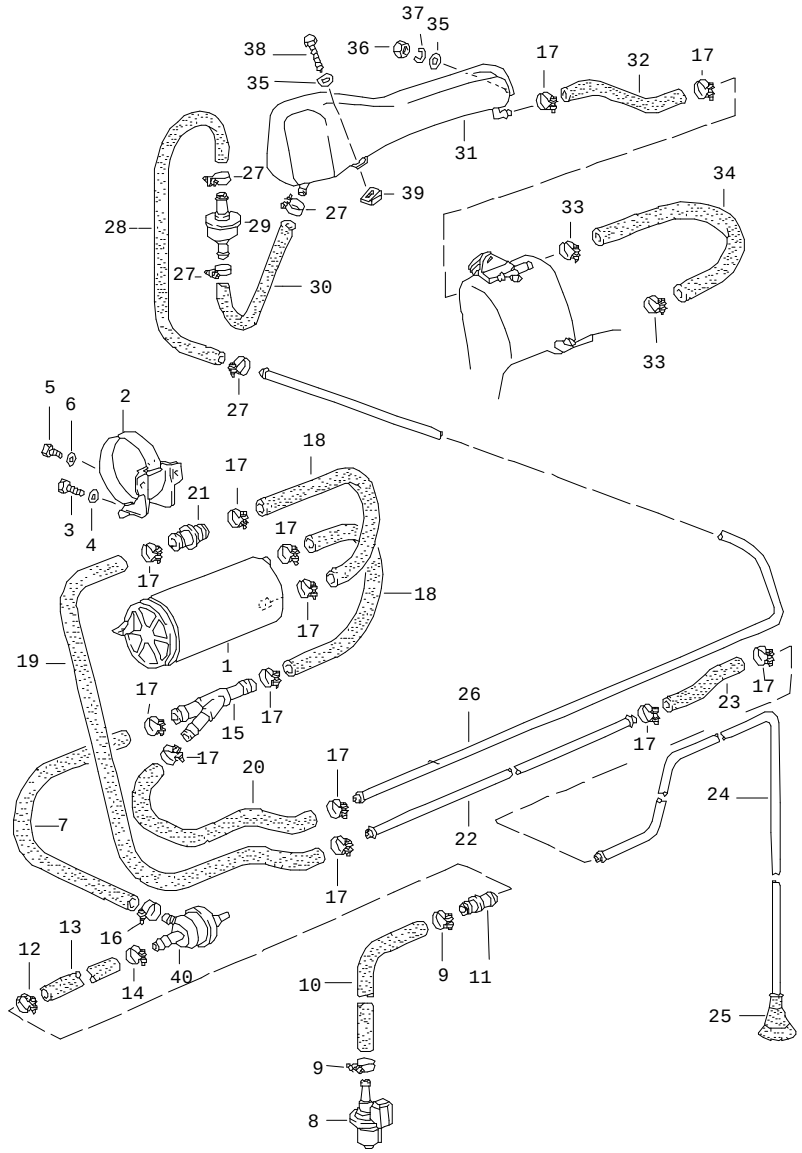

Pos	Part Number	Name	Remarks	Qty	Model
		tank ventilation			
1	993 201 221 01	carbon canister		1	
2	928 201 015 02	bracket		1	
3	900 075 014 02	hexagon-head bolt M 6 X 18		1	
4	803 817 121	washer B 6,4		1	
5	900 075 260 02	hexagon-head bolt M 6 X 16		1	
6	N 011 524 7	washer B 6,4		1	
-	999 181 168 50	hose 12 X 18,5 250 MM		*	
8	944 605 240 01	bleeder valve		1	
9	999 512 055 02	hose clamp		2	
10	999 181 419 50	hose		1	
11	999 137 058 40	reducing socket		1	
12	N 023 577 2	hose clamp		1	
13	928 110 652 01	hose		1	
14	999 512 554 00	hose clamp		2	
15	928 201 219 02	connecting piece		1	
16	900 272 003 02	hose clamp		2	
17	N 023 569 2	hose clamp		X	
18	477 201 747 C	hose		2	
19	900 180 031 50	hose		1	
-	999 181 716 50	hose 9,5 X 15,5 530 MM		* 1	
21	930 110 267 00	connecting socket		1	
22	928 201 353 06	purge-air line front		1	

Pos	Part Number	Name	Remarks	Qty	Model
-	999 181 716 50	hose 9,5 X 15,5 170 MM		* 1	
24	928 201 355 06	purge-air line rear		1	
25	928 201 195 02	end piece		1	
26	928 201 341 08	vent line		1	
27	999 512 554 00	hose clamp		4	
28	928 201 368 00	hose		1	
29	928 201 083 02	shut-off valve		1	
30	928 201 368 01	hose		1	
31	928 201 013 07	compensating tank		1	
-	999 181 716 50	hose 9,5 X 15,5 250 MM		* 1	
33	N 023 565 3	hose clamp		2	
34	928 201 194 03	hose		1	
35	N 011 524 7	washer A 6,4		2	
36	900 076 010 02	hexagon nut		1	
37	N 012 006 4	lock ring		1	
38	N 013 892 4	tapping screw		1	
39	999 507 003 02	speed nut		1	
40	928 110 429 08	vacuum valve		1	
		- -- E N D -- -			

Pos	Part Number	Name	Remarks	Qty	Model

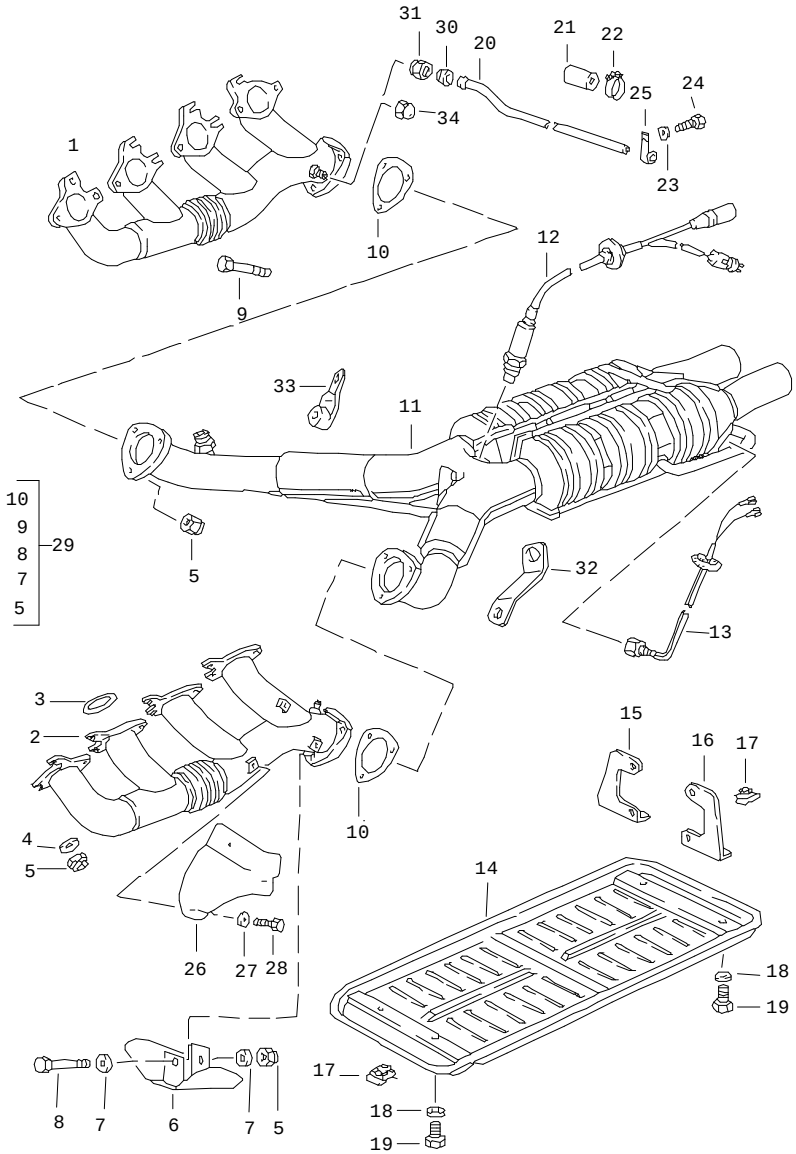

Pos	Part Number	Name	Remarks	Qty	Model
		exhaust system catalytic converter			
1	928 111 145 07	exhaust manifold cyl. 1 - 4		1	
(1)	927 111 145 02	exhaust manifold cyl. 1 - 4	/RL	1	
2	928 111 146 07	exhaust manifold cyl. 5 - 8		1	
(2)	927 111 146 00	exhaust manifold cyl. 5 - 8	/RL	1	
3	944 111 205 00	sealing ring		8	
4	928 111 181 00	washer		16	
5	999 084 052 02	lock nut M 8		22	
6	928 111 067 01	protective plate		1	M28.41/47
7	999 025 078 02	washer 8,4 X 17 X 1,5		2	M28.41/47
8	900 074 283 02	hexagon-head bolt M 8 X 45		1	M28.41/47
9	900 074 287 02	hexagon-head bolt M 8 X 35		5	M28.41/47
9	900 074 287 02	hexagon-head bolt M 8 X 35		6	M28.42
10	A 928 111 127 02	gasket		2	
(10)	928 111 127 02	gasket without asbestos		2	
11	928 113 214 03	catalytic converter		1	M28.42(J)
11	A 928 113 219 01	catalytic converter	-89	1	
11	928 113 219 04	catalytic converter	90-	1	
12	928 606 128 01	oxygen sensor heated		1	
13	928 606 145 00	temperature sensor		2	M28.42(J)
14	928 113 161 03	catalytic converter cover		1	M28.42(J)

Pos	Part Number	Name	Remarks	Qty	Model
15	928 113 148 00	retaining bracket	/R	1	M28.42(J)
16	928 113 163 00	retaining bracket	/L	1	M28.42(J)
17	999 507 003 02	speed nut		4	M28.42(J)
18	N 011 524 7	washer A 6,4		4	M28.42(J)
19	900 187 015 02	tapping screw B 6,3 X 13		4	M28.42(J)
20	928 111 149 05	pipeline cyl. 1 - 4	-88	1	
(20)	928 111 150 01	pipeline cyl. 5 - 8	-88	1	
21	035 133 335 B	cap		2	
22	999 512 160 02	hose clamp S 13/9		2	
23	N 011 524 7	washer A 6,4		2	
24	999 072 005 09	hexagon-head bolt M 6 X 12		2	
25	928 111 158 00	holder		2	
(25)	928 111 158 01	clip		2	
26	928 111 103 01	protective plate		1	
27	900 025 045 02	washer 6,4		3	
28	900 075 312 02	hexagon-head bolt M 6 X 12		3	
29	928 111 901 00	set of fastening parts		1	
30	900 102 009 00	cutting ring		2	
31	N 021 022 2	union nut		2	
32	928 111 162 00	bracket	/R	1	
33	928 111 161 00	bracket	/L	1	
34	930 113 153 00	cap use also: for exhaust manifold MOD.89-	89-	2	

- -- E N D -- -

Model	Year	MG	SG	Illustration	Restrictions	Update				
928	91	2	02	202-05		179	15:33	02.09.2004	PORSCHE	PET	PORSCHE

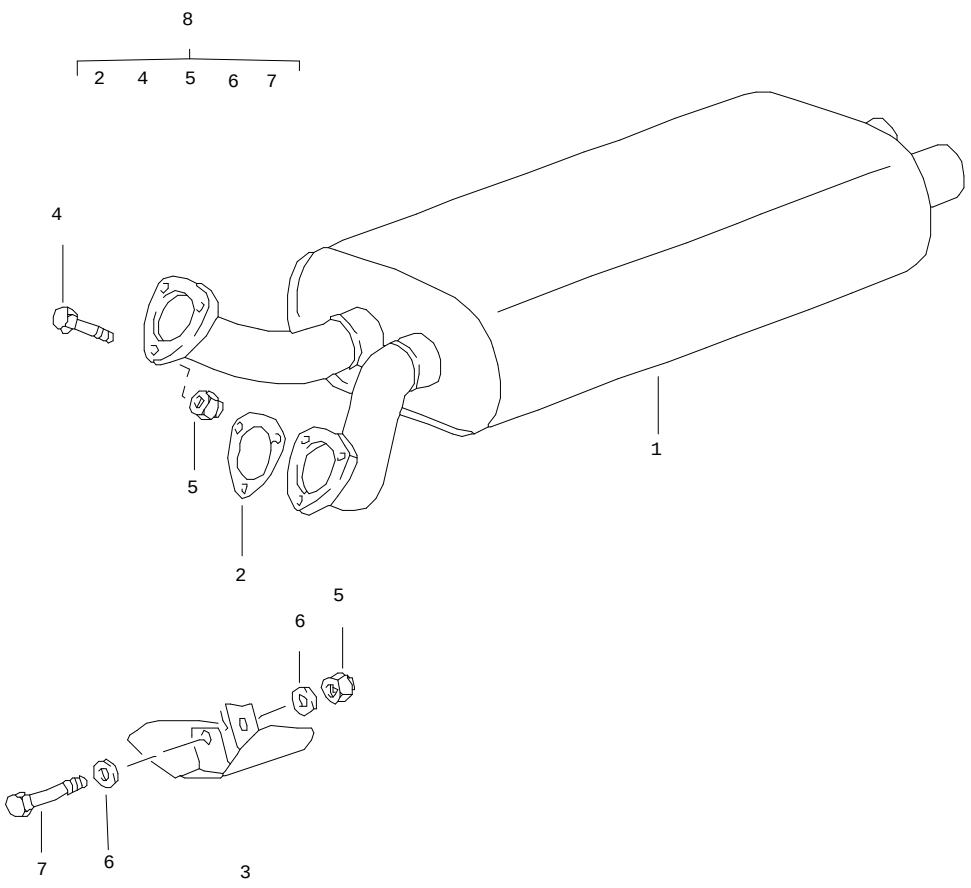

Pos	Part Number	Name	Remarks	Qty	Model
		exhaust system front muffler			
1	A 928 111 096 03	front muffler	87	1	
1	928 111 096 03	front muffler		1	
2	A 928 111 127 02	gasket		2	
2	928 111 127 02	gasket without asbestos		2	
3	928 111 067 01	protective plate		1	
4	900 074 287 02	hexagon-head bolt M 8 X 35		5	M28.41/47
4	900 074 287 02	hexagon-head bolt M 8 X 35	AUT.	6	M28.42
5	999 084 052 02	lock nut M 8		6	
6	999 025 078 02	washer 8,4 X 17 X 1,5		2	
7	900 074 283 02	hexagon-head bolt M 8 X 45		1	M28.41/47
8	928 111 901 00	set of fastening parts		1	
		- -- E N D -- -			

Model	Year	MG	SG	Illustration	Restrictions	Update	15:34	02.09.2004	PORSCHE	PET	PORSCHE
928	91	2	02	202-10		179					

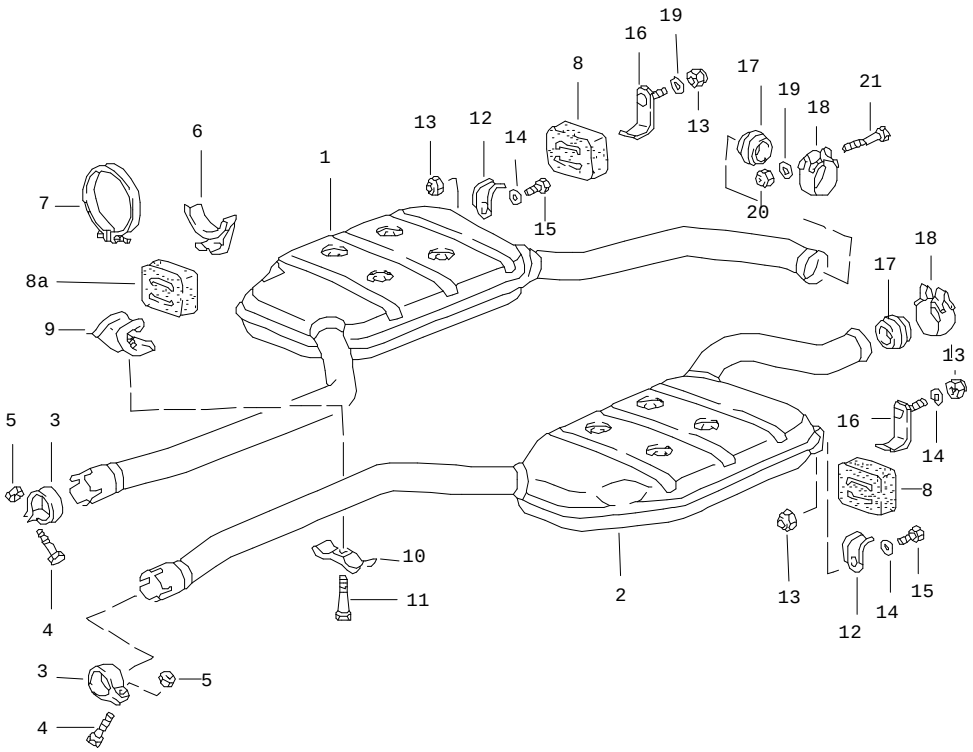

Pos	Part Number	Name	Remarks	Qty	Model
		exhaust system intermediate silencer			
1	928 111 094 01	intermediate silencer	/R -88	1	
1	928 111 094 01	intermediate silencer	/R 90-	1	M 639 (CH)
(1)	928 111 094 04	intermediate silencer	/R 88-	1	M 637
(1)	928 111 094 04	intermediate silencer	/R 89-	1	
2	928 111 093 01	intermediate silencer	/L -88	1	
2	928 111 093 01	intermediate silencer	/L 90-	1	M 639 (CH)
(2)	928 111 093 04	intermediate silencer	/L 88-	1	M 637
(2)	928 111 093 04	intermediate silencer	/L 89-	1	
3	928 111 424 00	clip		2	
4	900 155 036 02	hexagon-head bolt M 10 X 50		2	
5	999 084 047 02	lock nut M 10		2	
6	928 111 278 00	hook		1	
7	999 512 325 02	clip		1	
8	928 111 259 02	rubber mounting		4	
8A	928 111 259 02	rubber mounting		1	
9	928 111 287 00	support		1	
10	928 111 288 00	support		1	
11	900 155 036 02	hexagon-head bolt M 10 X 50		1	
12	928 111 264 01	hook		6	
13	900 910 022 02	lock nut		4	
14	900 025 007 02	washer		4	
15	900 075 366 02	hexagon-head bolt M 8 X 16			
16	928 111 260 00	hook		2	

Pos	Part Number	Name	Remarks	Qty	Model	Pos	Part Number	Name	Remarks	Qty	Model
17	928 111 246 05	sealing ring	87	2							
(17)	928 111 246 05	sealing ring	88-	2							
18	928 111 427 00	clip		2							
19	999 025 078 02	washer		2							
20	999 084 052 02	lock nut		2							
21	900 074 304 02	hexagon-head bolt M 8 X 60		2							
		- -- E N D -- -									

Model	Year	MG	SG	Illustration	Restrictions	Update				
928	91	2	02	202-15		179	15:34	02.09.2004	PORSCHE	PET	PORSCHE

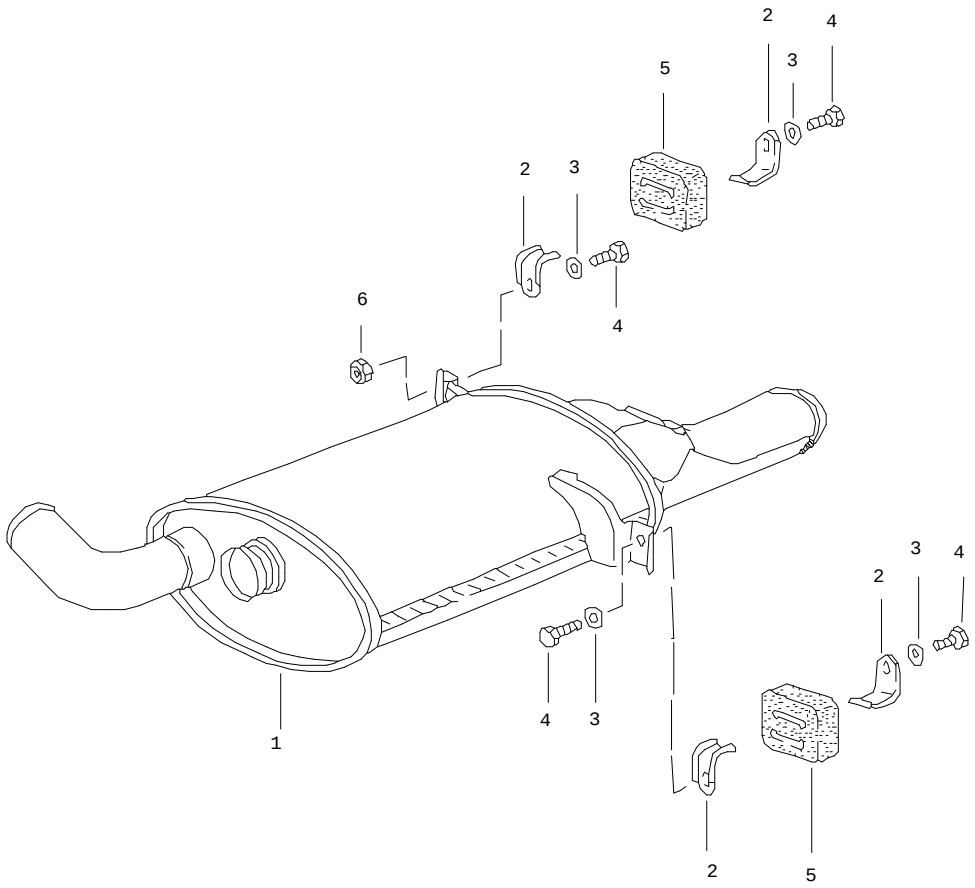

Pos	Part Number	Name	Remarks	Qty	Model
		exhaust system main exhaust muffler			
1	928 111 097 04	main exhaust muffler	-89	1	
(1)	928 111 097 04	main exhaust muffler		1	
(1)	928 111 097 04	main exhaust muffler		1	CH
2	928 111 264 01	hook		4	
3	900 025 007 02	washer		4	
4	900 075 087 02	hexagon-head bolt		4	
5	928 111 259 02	rubber mounting		2	
-	A 928 111 271 03	cover	88-89	2	M 637/639
-	928 111 271 03	cover	90-	2	
-	N 010 225 4	hexagon-head bolt M 5 X 8		2	
-	900 198 001 02	square nut M 5		2	
6	900 910 022 02	lock nut		X	
		- -- E N D -- -			

Model	Year	MG	SG	Illustration	Restrictions	Update		
928	91	2	98	REP		179	16:19	02.09.2004

Pos	Part Number	Name	Remarks	Qty	Model
		repair kits			M28.41/42/47
>>	> 928 113 911 00	reconstruction set for subsequent installat. catalytic converter see technical information GR.2 NR. 3/3A/3B/87		1	M28.41/42/47
		comprising:			
-	000 043 078 00	installation instructions		1	
-	928 113 219 01	catalytic converter		1	
-	928 111 424 00	clip		2	
-	900 155 036 02	hexagon-head bolt		2	
-	999 084 047 02	lock nut		2	
-	928 606 128 01	oxygen sensor		1	
-	928 607 433 00	coding plug		1	
-	928 607 434 00	coding plug		1	
-	900 124 008 02	screw plug		8	
-	900 123 043 30	sealing ring		8	
-	928 113 146 04	pipeline		1	
-	900 123 060 30	sealing ring		1	
-	928 113 215 02	support		1	
-	999 512 329 02	clip		1	
-	N 010 205 6	hexagon-head bolt		2	
-	N 011 005 14	hexagon nut		2	
-	928 006 117 03	sticker		1	
-	911 701 241 00	sticker		1	
-	944 701 201 03	sticker		1	
-	928 201 027 03	insert		1	
-	900 312 012 02	plug		1	
-	928 111 127 02	gasket		2	
-	900 074 287 02	hexagon-head bolt		6	
-	900 074 283 02	hexagon-head bolt		1	
-	999 025 078 02	washer		2	
-	999 084 052 02	lock nut		6	

Model	Year	MG	SG	Illustration	Restrictions	Update		
928	91	2	98	REP		179	16:19	02.09.2004

Pos	Part Number	Name	Remarks	Qty	Model
-	928 504 091 00	heat protection plate		1	
-	960 307 917 00	hose protecting sleeve		2	
-	928 307 190 00	connection piece		1	
>>	> 928 111 901 00	set of fastening parts for front muffler catalytic converter comprising:		1	
-	928 111 127 02	gasket		2	
-	900 074 287 02	hexagon-head bolt		6	
-	900 074 283 02	hexagon-head bolt		1	
-	999 025 078 02	washer		2	
-	999 084 052 02	lock nut		6	
		- -- E N D -- -			

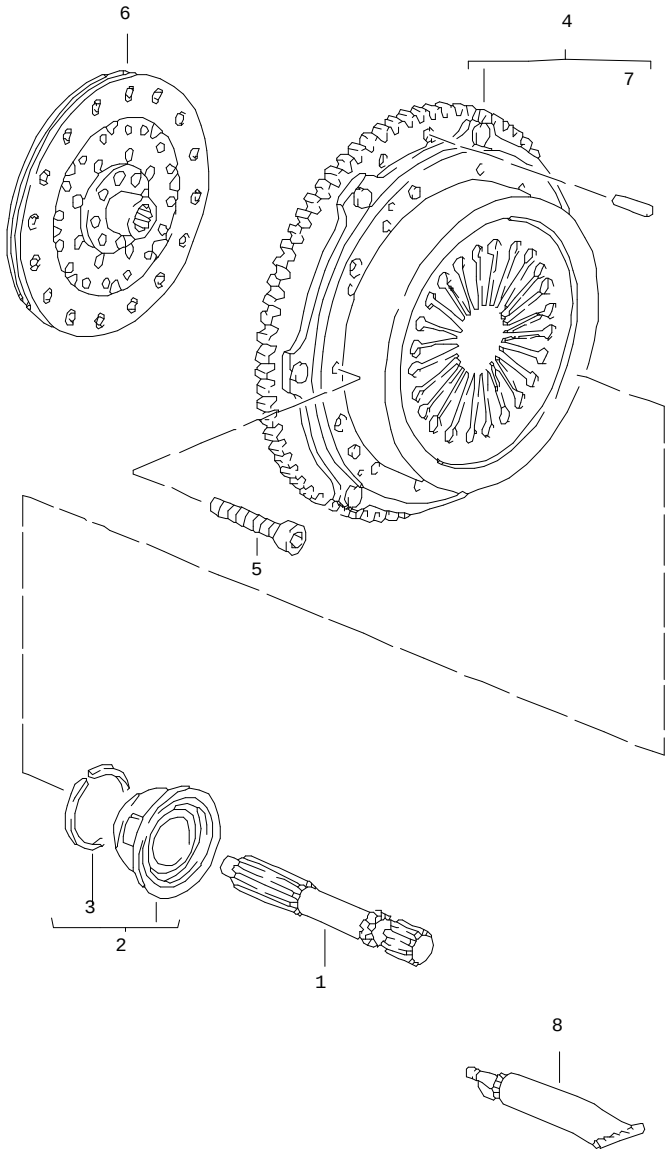

Pos	Part Number	Name	Remarks	Qty	Model
		manual transmission clutch see technical information group 3 NR. 1/94			G28.12/13/55
1	928 421 235 16	central shaft		1	
2	928 116 085 05	clutch release bearing		1	
2	928 116 085 08	clutch release bearing		1	
3	999 152 068 01	snap ring		1	
4	> 928 116 004 10	pressure plate	-88	1	
(4)	928 116 004 12	pressure plate	89-	1	
5	900 067 284 02	pan-head screw M 8 X 53		9	
6	A 928 116 013 17	clutch plate	87	1	
(6)	928 116 013 23	clutch plate	88-	1	
7	N 013 381 1	straight pin	-88	2	
(7)	N 013 373 1	straight pin	-88	2	
8	000 043 024 00	extreme-pressure grease		X	
-	928 116 911 01	repair kit for clutch	87	1	
-	928 116 911 02	repair kit for clutch	88-	1	
		- -- E N D -- -			

Model	Year	MG	SG	Illustration	Restrictions	Update				
928	91	3	01	301-05		179	15:34	02.09.2004	PORSCHE	PET	PORSCHE

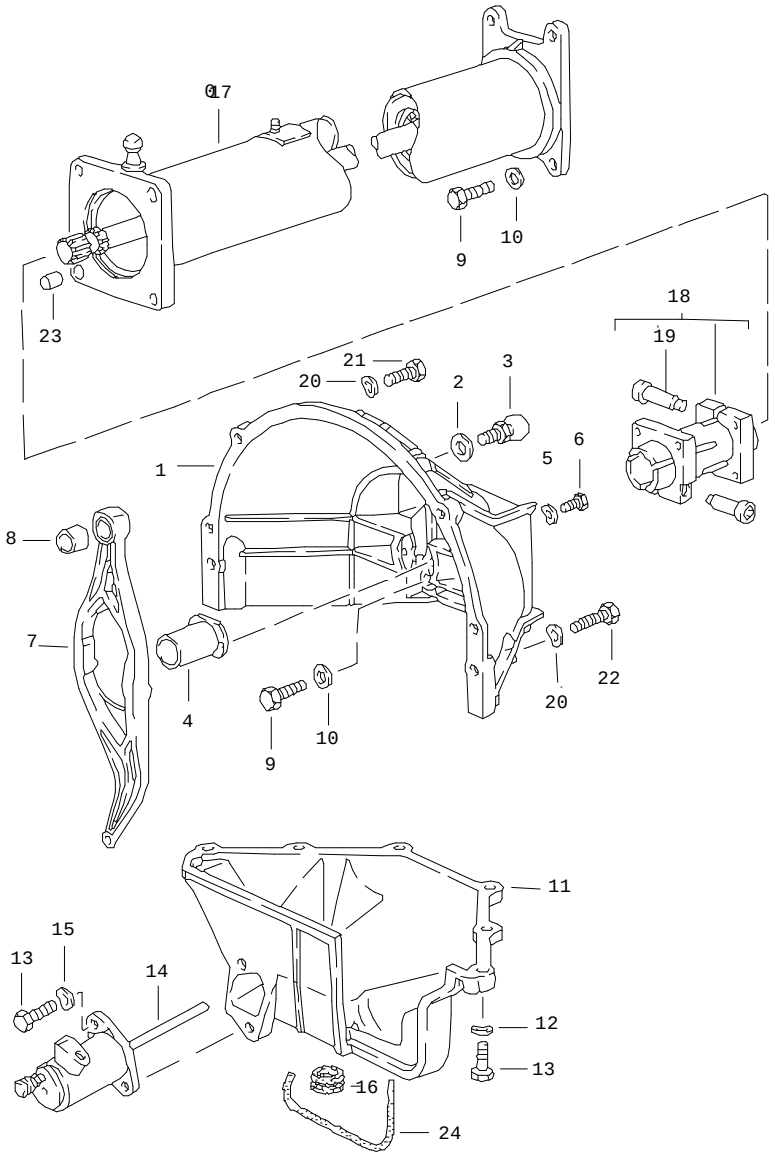

Pos	Part Number	Name	Remarks	Qty	Model
		central tube			G28.12/13/55
1	928 116 402 00	clutch housing	-88	1	
1	928 116 402 01	clutch housing	89-	1	
2	900 025 007 02	washer A 8,4		1	
3	928 116 075 01	ball pin 8 MM $		1	
4	928 116 087 15	guide tube		1	
4	928 116 087 16	guide tube		1	
5	N 011 524 7	washer A 6,4		2	
6	900 075 057 02	hexagon-head bolt M 6 X 16		2	
7	928 116 832 08	clutch release lever		1	
8	928 116 145 03	ball socket		1	
9	N 010 445 2	hexagon-head bolt M 10 X 45		8	
10	900 025 008 09	washer A 10,5		8	
11	928 116 412 03	cover clutch housing		1	
11	928 116 412 03	cover clutch housing		1	G28.55 M 637
12	N 012 241 8	spring washer B 8		6	
13	900 075 099 02	hexagon-head bolt M 8 X 30		8	
14	A 928 116 237 22	clutch operating cylinder	-89	1	
14	928 116 237 22	clutch operating cylinder	90-	1	
15	900 027 015 02	lock ring B 8		2	
16	928 116 425 00	cap		3	

Pos	Part Number	Name	Remarks	Qty	Model	Pos	Part Number	Name	Remarks	Qty	Model
17	928 421 012 26	central tube		1							
18	922 421 051 02	clamping sleeve		1							
19	931 421 240 00	clamping screw		2							
20	N 011 531 14	washer B 12		2							
21	N 010 142 2	hexagon-head bolt M 12 X 1,5 X 50		2							
22	N 010 156 3	hexagon-head bolt M 12 X 1,5 X 70		1							
(22)	900 082 020 09	hexagon-head bolt		1							
23	900 197 042 01	roll pin 10 X 12		2							
24	928 116 427 02	sealing strip		1							
		- -- E N D -- -									

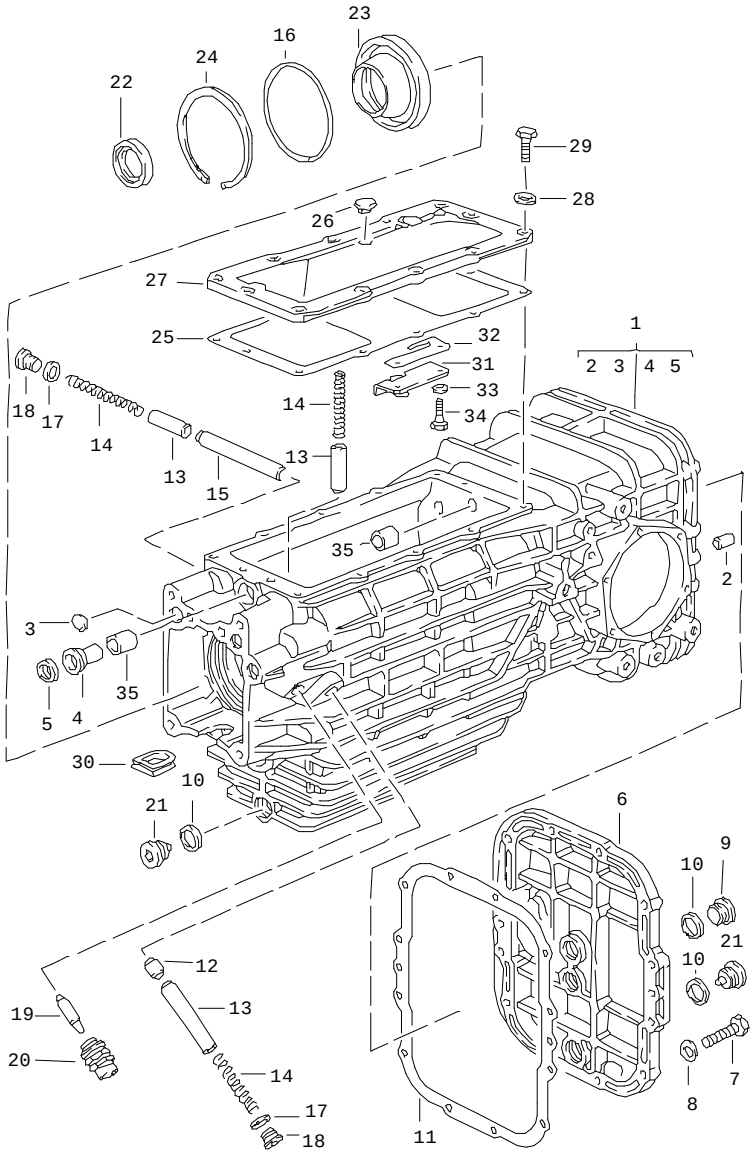

Pos	Part Number	Name	Remarks	Qty	Model
		manual transmission replacement transmission transmission case			G28.12/13/55
-	> 928 300 005 12	manual transmission complete	-89	1	G28.12
-	> 928 300 015 12	manual transmission complete	-89	1	G28.12
-	928 300 015 55	manual transmission		1	G28.55 M 637 G28.55 M 639 G28.55 M 221
		complete	89		
-	> 928 300 030 55	manual transmission complete porsche limited-slip differential	90	1	
-	> 928 300 030 56	manual transmission complete porsche limited-slip differential	91-	1	G28.55 M 221
1	A 928 301 012 00	transmission case	-88	1	
1	928 301 012 00	transmission case	89	1	
(1)	928 301 012 01	transmission case	90-	1	G28.55 M 221
2	900 012 086 00	straight pin 6 X 18		2	
3	900 040 013 02	cover plate		3	
4	928 301 502 03	guide bush		1	
5	* 928 303 120 01	shaft seal		1	
6	928 301 306 00	housing cover rear	-90	1	
6	928 301 306 06	housing cover rear	91-	1	
7	900 075 099 02	hexagon-head bolt M 8 X 30		12	

Pos	Part Number	Name	Remarks	Qty	Model
8	900 025 007 02	washer A 8,4		12	
9	900 219 001 30	screw plug		1	
10	900 123 118 30	sealing ring A 22 X 27		3	
11	* 928 301 395 03	gasket		1	
12	928 303 231 24	detent		1	
13	928 303 234 00	arresting bush		3	
14	928 303 235 24	compression spring		3	
15	928 303 232 00	detent		1	
16	* 999 701 904 40	o-ring		1	
17	900 123 043 30	sealing ring		2	
18	900 219 006 02	screw plug		2	
19	928 606 241 02	cam follower		1	
20	914 613 541 02	back-up light switch		1	
21	999 063 008 02	screw plug		2	
22	* 928 302 167 03	shaft seal		1	
23	928 302 175 12	housing		1	
24	N 101 003 1	circlip		1	
25	* 928 301 393 07	gasket		1	
26	928 301 311 01	bleeder		1	
27	928 301 303 11	cover		1	
28	N 011 524 7	washer A 6,4		12	
29	900 075 016 02	hexagon-head bolt M 6 X 22		12	
30	928 301 171 00	cap		1	
31	928 303 025 05	reversing gear lock		1	
32	928 303 287 01	leaf spring		1	
33	N 012 226 5	spring washer B 6		2	
34	900 075 057 02	hexagon-head bolt M 6 X 16		2	
35	999 203 003 00	bearing sleeve		2	
		- -- E N D -- -			

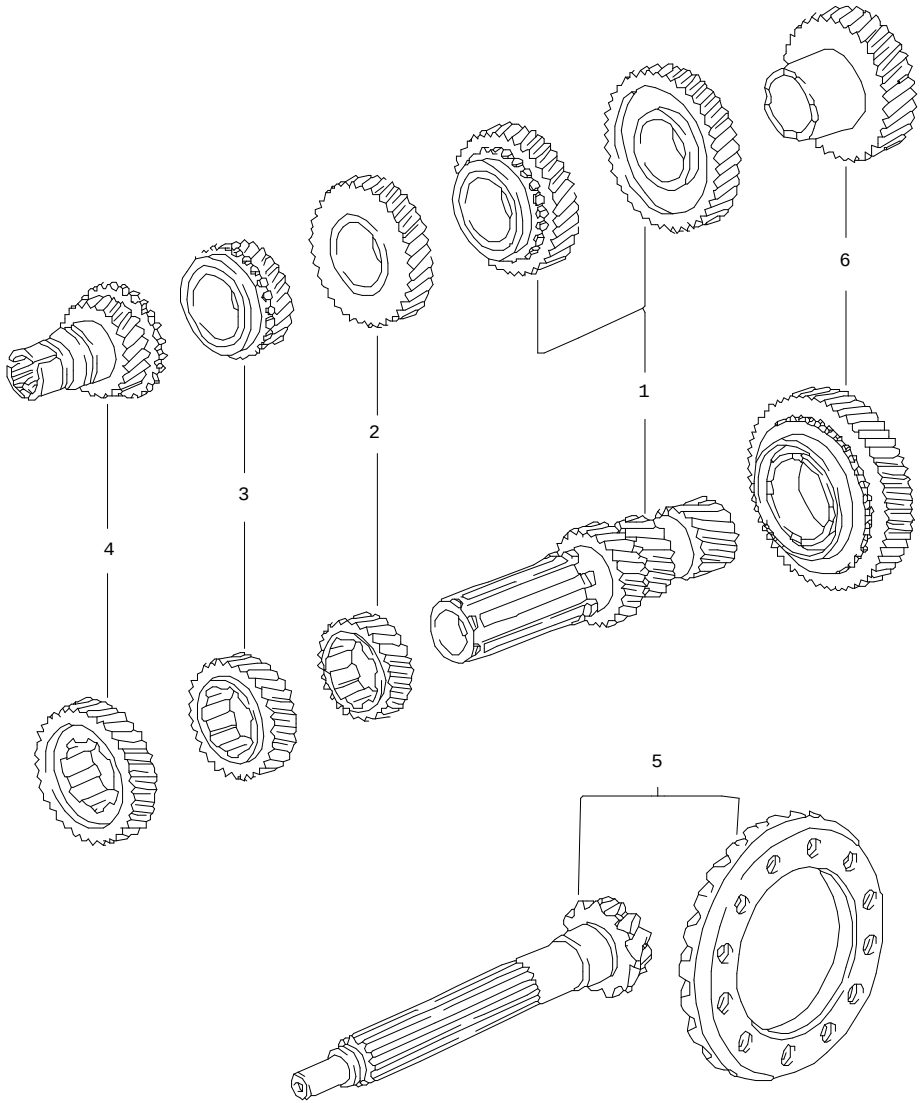

Pos	Part Number	Name	Remarks	Qty	Model
		manual transmission gear sets			G28.12/13/55
1	928 302 901 18	gear set 1st/2nd gear Z = 17:44 Z = 22:38 use also: 999.152.087.01 928.302.278.00		1	
2	928 302 903 18	gear wheel pair 3rd speed Z = 26:32		1	
3	928 302 904 19	gear wheel pair 4th speed Z = 29:27		1	
4	928 302 905 32	gear set 5th speed Z = 22:32		1	G28.12
4	928 302 905 32	gear set 5th speed Z = 22:32		1	G28.55 M 637 M 639
5	928 302 911 65	ring gear and pinion shaft Z = 11:29		1	G28.12
5	928 302 911 64	ring gear and pinion shaft Z = 11:30		1	G28.55 M 637 M 639
6	928 302 907 03	gear set reverse gear		1	

- -- E N D -- -

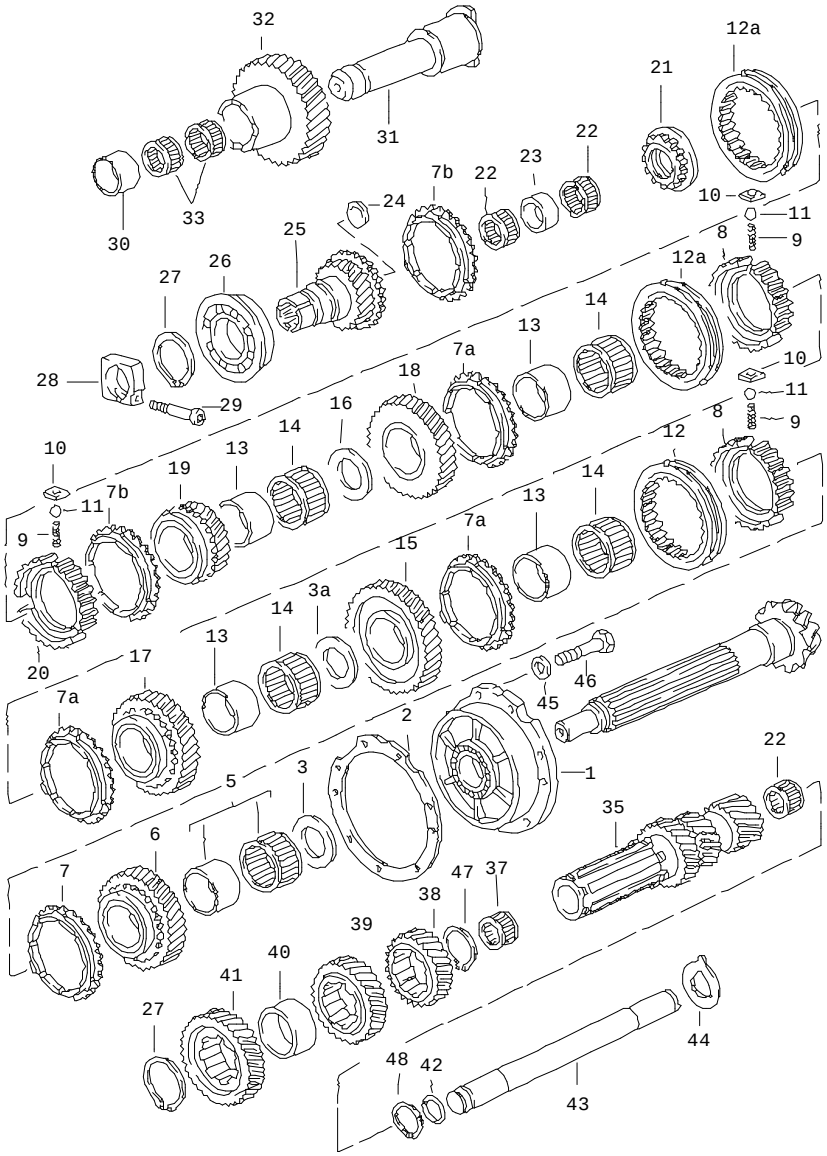

Pos	Part Number	Name	Remarks	Qty	Model
		manual transmission gears and shafts			G28.12/13/55
1	928 302 063 34	bearing sleeve		1	
2	928 302 298 10	adjusting shim 0,10 MM		X	
(2)	928 302 298 11	adjusting shim 0,15 MM		X	
(2)	928 302 298 12	adjusting shim 0,20 MM		X	
(2)	928 302 298 13	adjusting shim 0,50 MM		X	
3	928 302 267 10	shim 2,20 MM		1	
(3)	928 302 267 11	shim 2,30 MM		X	
(3)	928 302 267 12	shim 2,40 MM		X	
(3)	928 302 267 13	shim 2,50 MM		X	
(3)	928 302 267 14	shim 2,60 MM		X	
(3)	928 302 267 15	shim 2,70 MM		X	
(3)	928 302 267 16	shim 2,80 MM		X	
(3)	928 302 267 17	shim 2,90 MM		X	
(3)	928 302 267 18	shim 3,00 MM		X	
(3)	928 302 267 19	shim 3,10 MM		X	
(3)	928 302 267 21	shim 3,20 MM		X	
(3)	928 302 267 22	shim 3,30 MM		X	

Pos	Part Number	Name	Remarks	Qty	Model
3A	928 302 267 13	shim 2,50 MM		1	
5	999 201 223 01	needle cage		1	
6	-	loose gear wheel reverse gear			
7	928 304 211 02	synchroniser ring		1	
7A	928 304 211 12	synchroniser ring		3	
7B A	928 304 211 05	synchroniser ring		2	
7B	928 304 211 05	synchroniser ring		2	
8	928 304 221 04	guide sleeve 1st gear 2nd gear 3rd speed reverse gear		2	
9	928 304 261 01	compression spring		9	
10	928 304 251 00	stone		9	
11	N 025 653 2	ball		9	
12	928 304 231 02	shift sleeve 1st gear reverse gear		1	
12A	928 304 231 00	shift sleeve 2nd gear 3rd speed 4th speed 5th speed		2	
13	928 302 271 01	inner ring		4	
14	999 201 260 00	needle cage		4	
15	-	loose gear wheel 1st gear			
16	928 302 267 20	thrust washer		1	
17	-	loose gear wheel 2nd gear			
18	-	loose gear wheel 3rd speed			
19	-	loose gear wheel 4th speed			
20	928 304 021 11	guide sleeve 4th speed 5th speed		1	
21	928 302 266 09	lock nut		1	
22	928 302 163 00	needle cage		4	
23	928 302 165 01	thrust ring		1	
24	900 040 013 02	cover plate		1	
25	-	drive shaft			
26	999 052 138 00	deep-groove ball bearing		1	
27	900 041 047 01	circlip 55 X 2		2	
28	922 421 239 02	clamping piece		1	
29	931 421 240 00	clamping screw		1	
30	928 302 234 00	spacer sleeve		1	
31	928 302 229 11	reversing gear axle		1	
32	-	reverse idler gear			
33	999 201 227 00	needle cage		2	
34	928 302 281 03	thrust washer		1	
35	-	countershaft axle		1	
37	999 201 290 00	needle-roller bearing		1	
38	-	fixed gear wheel			
39	-	fixed gear wheel			
40	928 302 279 03	spacer sleeve		1	
41	-	fixed gear wheel			
42	* 928 302 283 01	round seal		1	
43	928 302 036 02	countershaft axle		1	
44	928 302 281 03	thrust washer		1	

Pos	Part Number	Name	Remarks	Qty	Model	Pos	Part Number	Name	Remarks	Qty	Model
45	999 523 102 02	lock washer		7							
46	N 010 244 6	hexagon-head bolt M 8 X 30		7							
47	999 042 031 01	snap ring 35 X 1,5		1							
48	N 012 314 1	snap ring		1							
-	928 302 131 00	funnel		1							
		- -- E N D -- -									

Model	Year	MG	SG	Illustration	Restrictions	Update				
928	91	3	04	304-00		179	15:35	02.09.2004	PORSCHE	PET	PORSCHE

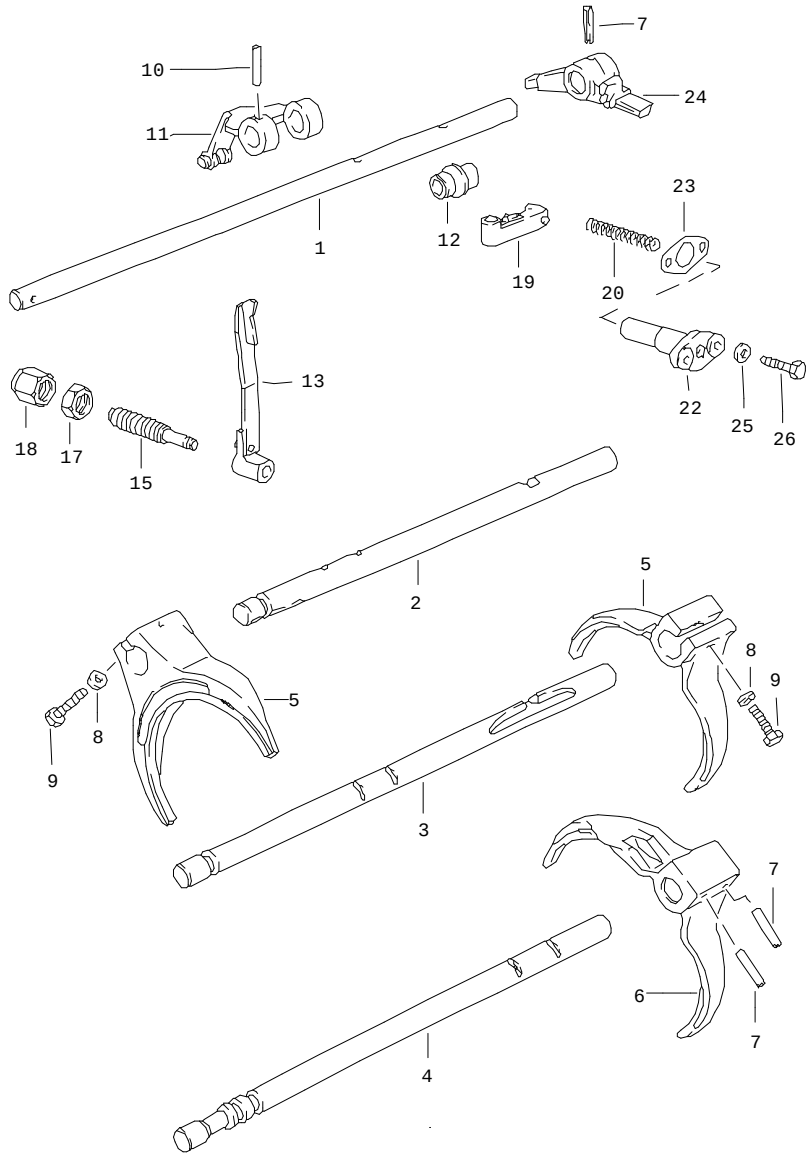

Pos	Part Number	Name	Remarks	Qty	Model
		manual transmission shift rods forks			G28.12/13/55
1	928 303 107 30	inner shift rod		1	
(2)	928 303 102 34	gear shift rod 4th speed 5th speed		1	
3	928 303 101 28	gear shift rod 2nd gear 3rd speed		1	
4	928 303 105 27	gear shift rod 1st gear reverse gear		1	
5	928 303 113 27	shift fork 2nd gear 3rd speed 4th speed 5th speed		2	
6	928 303 115 41	shift fork 1st gear reverse gear		1	
7	N 013 317 1	roll pin		3	
8	N 011 525 13	washer A 8,4		2	
9	N 010 359 4	hexagon-head bolt M 8 X 40		2	
10	900 309 013 00	roll pin		1	
11	A 928 303 032 06	preselector lever	87	1	
(11)	928 303 032 06	preselector lever	88-	1	
12	928 303 301 04	trip cam		1	
13	928 303 034 09	spring		1	
-	928 303 306 01	bolt		1	
15	928 303 331 04	threaded bolt M 14 X 1		1	
16	N 012 410 1	circlip 10 X 1		1	

Pos	Part Number	Name	Remarks	Qty	Model	Pos	Part Number	Name	Remarks	Qty	Model
17	999 076 032 02	hexagon nut M 14 X 1		1							
18	999 070 012 02	cap nut M 14 X 1		1							
19	928 303 031 00	roller lever		1							
20	928 303 309 01	compression spring		1							
22	928 303 311 02	guide sleeve		1							
23	* 928 303 313 00	gasket		1							
24	928 303 117 08	shift finger		1							
25	N 011 524 7	washer A 6,4		2							
26	900 075 016 02	hexagon-head bolt M 6 X 22		2							
-	N 012 439 2	lock washer		1							
		- -- E N D -- -									

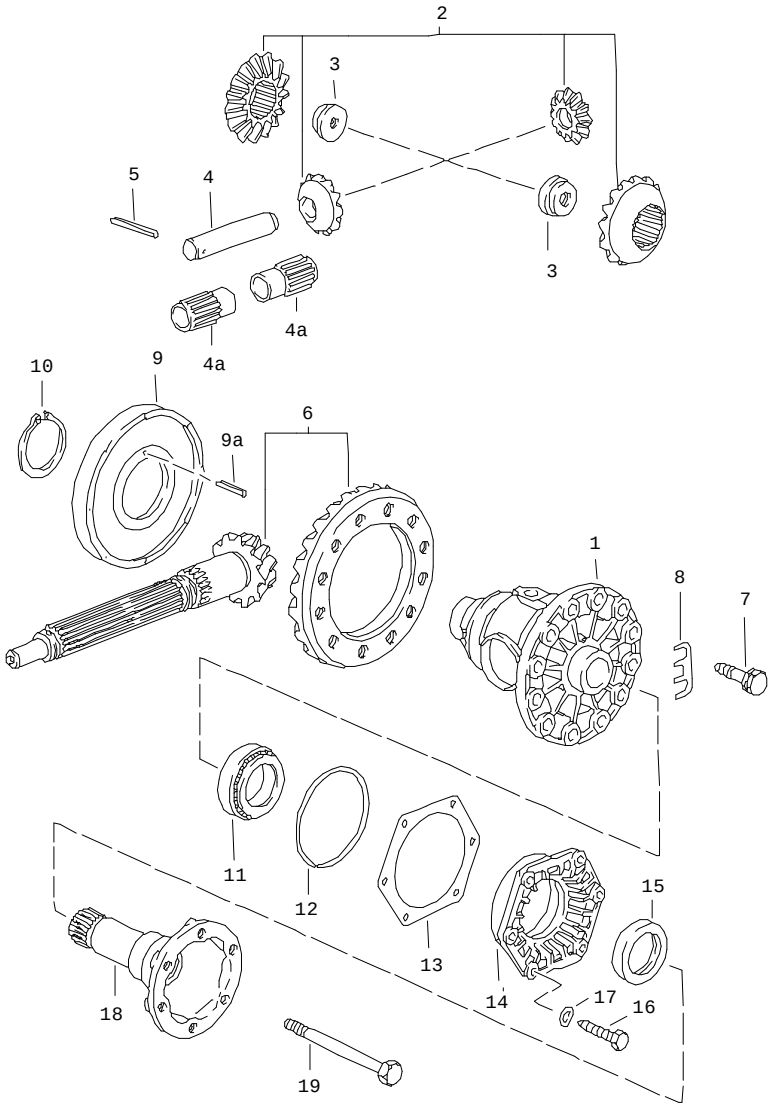

Pos	Part Number	Name	Remarks	Qty	Model
		manual transmission differential			G28.12/13/55
1	928 332 212 08	differential housing	-89	1	
2	A 928 332 902 02	differential pinions 1 set	-89	1	
2	950 332 902 00	gear set 1 set	-89	1	
3	928 332 279 03	threaded disc	-89	2	
4	928 332 207 07	differential bolt 18 MM $	-89	1	
4A	999 201 237 00	needle cage	-89	2	
5	900 309 035 00	roll pin 5 X 40	-89	1	
6	928 302 911 65	ring gear and pinion shaft 11 : 29	-89	1	G28.12
(6)	928 302 911 64	ring gear and pinion shaft 11 : 30		1	G28.55
7	928 332 276 03	hexagon-head bolt		12	
8	928 332 285 00	tab washer		6	
9	928 318 024 05	carrier disc with magnets	-89	1	
9A	N 043 285 1	roll pin 5 X 18	-89	1	
10	999 152 089 01	snap ring		1	
11	999 059 027 00	taper roller bearing FAG		2	
12	* 928 332 217 02	o-ring		2	
13	928 332 219 00	adjusting shim 0,15 MM		X	
(13)	928 332 219 01	adjusting shim 0,20 MM		X	
(13)	928 332 219 02	adjusting shim 0,25 MM		X	
(13)	928 332 219 03	adjusting shim 0,30 MM		X	

Pos	Part Number	Name	Remarks	Qty	Model
(13)	928 332 219 04	adjusting shim 0,10 MM		X	
14	928 332 213 02	housing		2	
(14)	928 332 213 05	housing	90-	1	M 221
15	* 928 332 215 02	shaft seal		2	
16	900 075 099 02	hexagon-head bolt M 8 X 30		12	
17	900 025 007 02	washer A 8,4		12	
18	928 332 206 10	joint flange	-89	2	
19	900 074 292 02	hexagon-head bolt M 10 X 98		2	
		- -- E N D -- -			

Pos	Part Number	Name	Remarks	Qty	Model

Model	Year	MG	SG	Illustration	Restrictions	Update				
928	91	3	05	305-05		179	15:36	02.09.2004	PORSCHE	PET	PORSCHE

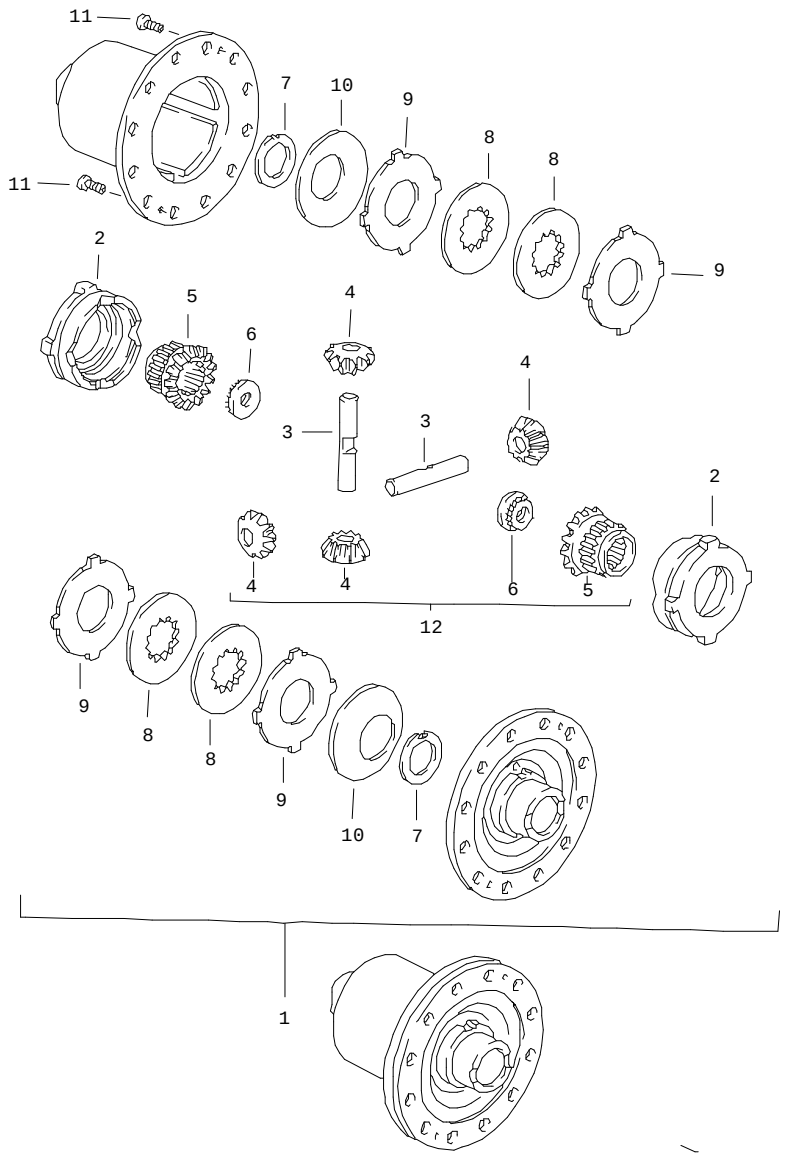

Pos	Part Number	Name	Remarks	Qty	Model
		manual transmission limited-slip differential	-89		G28.12/13/55
1	928 332 052 20	limit.-slip different. 40%		1	
2	928 332 511 00	thrust ring		2	
3	928 332 541 00	differential shaft		2	
4	* -	bevel pinion		4	
5	* -	shaft bevel gear		2	
6	* 928 332 279 01	threaded disc		2	
7	901 332 561 11	thrust washer		2	
8	928 332 551 00	inner disc 2,0 MM		2	
9	917 332 552 10	disc with external splines 1,9 MM		6	
(9)	917 332 552 11	disc with external splines 2,0 MM		X	
(9)	917 332 552 12	disc with external splines 2,1 MM		X	
10	928 332 555 20	cup spring		2	
11	900 249 023 00	countersunk-head screw M 6 X 10		2	
12	928 332 905 00	differential pinions 1 set		1	
		- -- E N D -- -			

Model	Year	MG	SG	Illustration	Restrictions	Update	15:36	02.09.2004	PORSCHE	PET	PORSCHE
928	91	3	05	305-06		179					

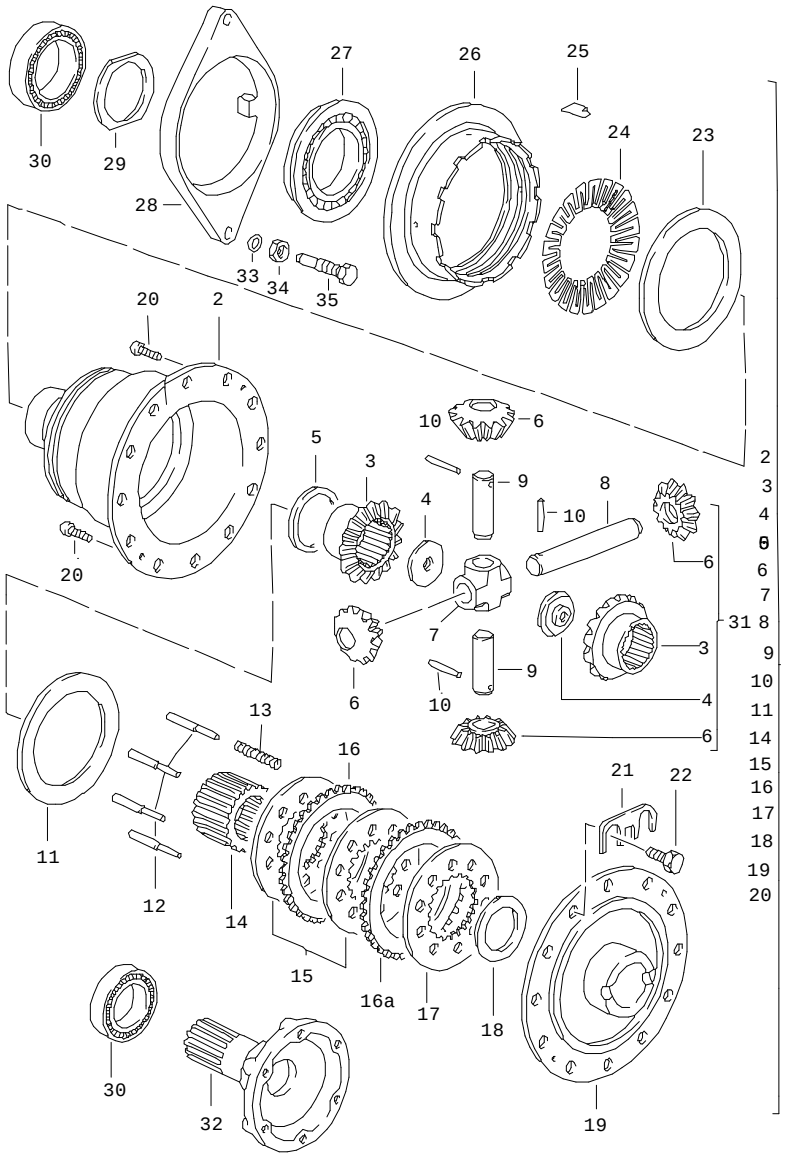

Pos	Part Number	Name	Remarks	Qty	Model
		manual transmission porsche limited-slip differential	90-		G28.55 M 221
1	928 332 075 03	limited-slip differential		1	
2	928 332 701 15	housing		1	
3	* -	shaft bevel gear		2	
4	* 943 332 279 02	nut		2	
5	928 332 719 00	thrust washer 1,8 MM		X	
5	928 332 719 01	thrust washer 1,9 MM		X	
5	928 332 719 02	thrust washer 2,0 MM		X	
5	928 332 719 03	thrust washer 2,1 MM		X	
5	928 332 719 04	thrust washer 2,2 MM		X	
6	* -	bevel pinion		4	
7	928 332 745 00	4 way connector		1	
8	928 332 741 00	differential bolt		1	
9	928 332 743 00	differential bolt		2	
10	900 309 035 00	roll pin 5 X 40		3	
11	928 332 711 00	thrust ring		1	
12	928 332 715 08	pressure pin		4	
13	928 332 716 02	coil pressure spring		4	
14	928 332 748 03	disc carrier		1	
15	928 332 728 00	inner disc		5	
16	928 332 726 05	disc with external splines 1,5 MM		8	
16A	928 332 726 03	disc with external splines 1,1 MM		1	

Pos	Part Number	Name	Remarks	Qty	Model
16A	928 332 726 04	disc with external splines 1,3 MM		X	
16A	928 332 726 06	disc with external splines 1,7 MM		X	
16A	928 332 726 07	disc with external splines 1,9 MM		X	
16A	928 332 726 08	disc with external splines 2,1 MM		X	
16A	928 332 726 09	disc with external splines 2,3 MM		X	
16A	928 332 726 10	disc with external splines 2,5 MM		X	
16A	928 332 726 11	disc with external splines 2,7 MM		X	
17	928 332 724 00	inner disc		5	
18	928 332 720 50	thrust washer 1,8 MM		X	
18	928 332 720 51	thrust washer 1,9 MM		X	
18	928 332 720 52	thrust washer 2,0 MM		X	
18	928 332 720 53	thrust washer 2,1 MM		X	
18	928 332 720 54	thrust washer 2,2 MM		X	
18	928 332 720 55	thrust washer 2,3 MM		X	
18	928 332 720 56	thrust washer 2,4 MM		X	
19	928 332 706 10	housing cover		1	
20	900 249 008 02	countersunk-head screw M 6 X 12		2	
21	928 332 285 00	tab washer		6	
22	928 332 276 03	hexagon-head bolt		12	
23	928 332 713 02	thrust ring		1	
24	928 332 756 06	leverage washer		1	
25	950 332 753 02	tab washer		1	
26	928 332 077 00	adjusting nut	90	1	
26	928 332 750 01	adjusting nut	91	1	
27	928 332 761 04	engaging mount		1	
28	928 332 771 02	engaging lever		1	
29	928 332 718 00	washer		1	
30	999 059 027 00	taper roller bearing		2	
31	928 332 907 00	differential pinions 1 set		1	
32	928 332 206 20	joint flange		2	
33	900 123 043 30	sealing ring A 12 X 15,5		1	
34	N 011 020 8	hexagon nut		1	
35	928 332 271 05	hexagon-head bolt		1	

- -- E N D -- -

Model	Year	MG	SG	Illustration	Restrictions	Update			
928	91	3	05	305-07		179	15:36	02.09.2004	PORSCHE PET PORSCHE

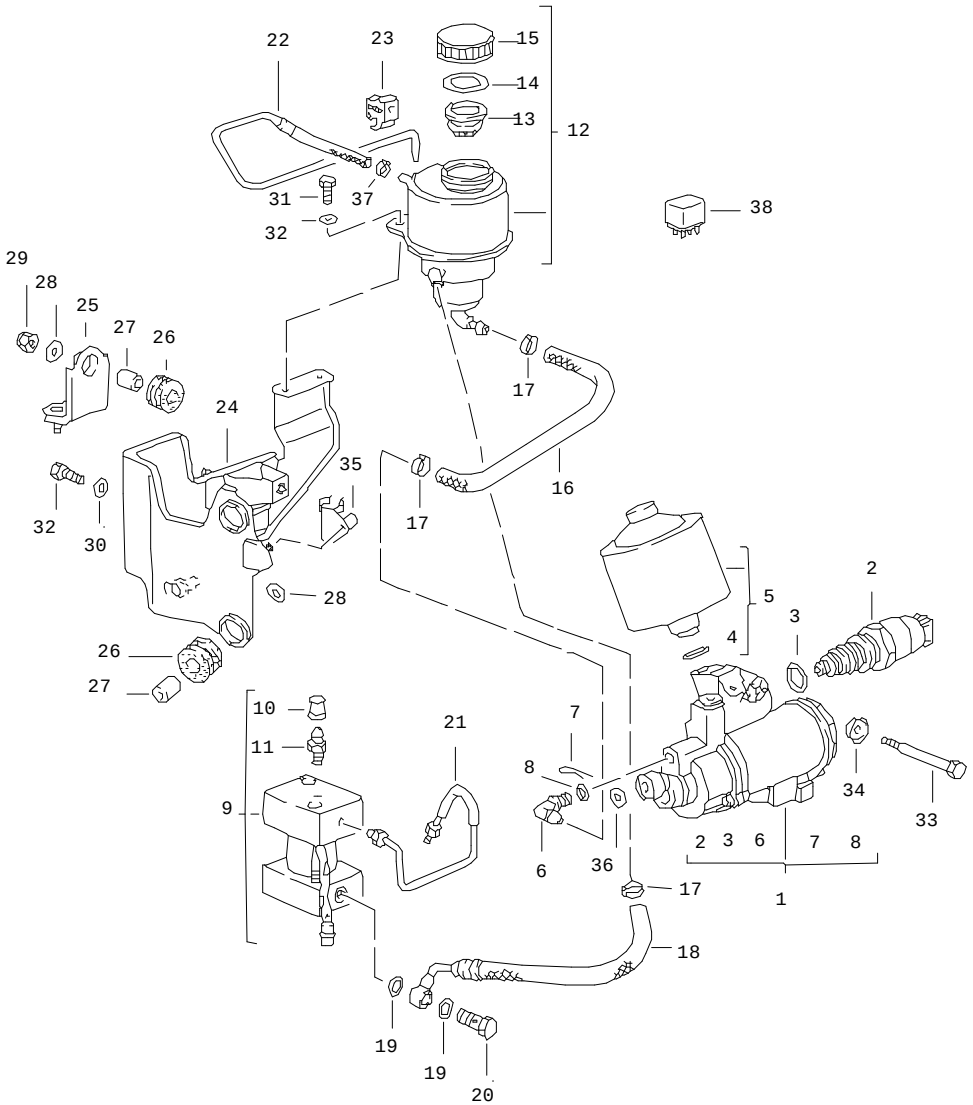

Pos	Part Number	Name	Remarks	Qty	Model
		manual transmission lock control 1	90-		G28.55 M 221
1	928 315 906 00	pump		1	
2	964 606 904 00	pressure switch		1	
3	999 707 094 40	o-ring 17,3 X 2,4		1	
4	999 707 123 40	o-ring 11,3 X 2,4		1	
5	928 315 905 00	pressure accumulator		1	
6	999 230 366 40	elbow		1	
7	999 021 003 00	lock		1	
8	999 707 075 40	o-ring		1	
9	928 315 163 00	valve support		1	
10	930 351 919 00	ventilation valve		1	
11	930 351 927 00	dust boot		1	
12	928 315 013 01	expansion tank	-90	1	
(12)	928 315 013 01	expansion tank	91-	1	
13	211 611 381 B	strainer		1	
14	901 355 908 00	gasket		1	
15	911 355 905 02	cover	-90	1	
(15)	928 315 025 00	cover	91-	1	
16	928 315 801 00	feed line		1	
17	999 512 532 00	terminal		3	
18	928 315 098 01	hose line return		1	
19	900 123 033 20	sealing ring		2	
20	900 175 002 02	screw		1	
21	928 315 091 02	connecting line		1	
22	928 315 097 01	vent line	-90	1	

Pos	Part Number	Name	Remarks	Qty	Model
(22)	928 315 097 02	vent line	91-	1	
23	999 591 930 40	support		1	
24	928 315 043 02	support		1	
25	928 315 047 02	bracket		1	
26	964 356 635 00	rubber mounting		3	
27	928 355 633 00	bush		3	
28	N 011 550 1	washer B 6,5		X	
29	900 910 010 09	lock nut M 6		X	
30	N 011 666 7	washer B 6,4		4	
31	900 075 057 02	hexagon-head bolt M 6 X 16		2	
32	999 072 005 09	hexagon-head bolt M 6 X 12		2	
33	999 074 043 02	hexagon-head bolt M 6 X 65		1	
34	999 025 202 02	washer		1	
35	911 612 450 00	support		1	
36	900 025 007 02	washer A 8,4		1	
37	999 512 555 00	terminal 9,8 - 12,3		1	
38	964 615 135 00	relay for pump		1	
-	A 993 606 153 00	lateral accelerat. sensor		1	
-	993 606 153 00	lateral accelerat. sensor		1	
		- -- E N D -- -			

Pos	Part Number	Name	Remarks	Qty	Model

Model	Year	MG	SG	Illustration	Restrictions	Update	15:36	02.09.2004	PORSCHE	PET	PORSCHE
928	91	3	05	305-08		179					

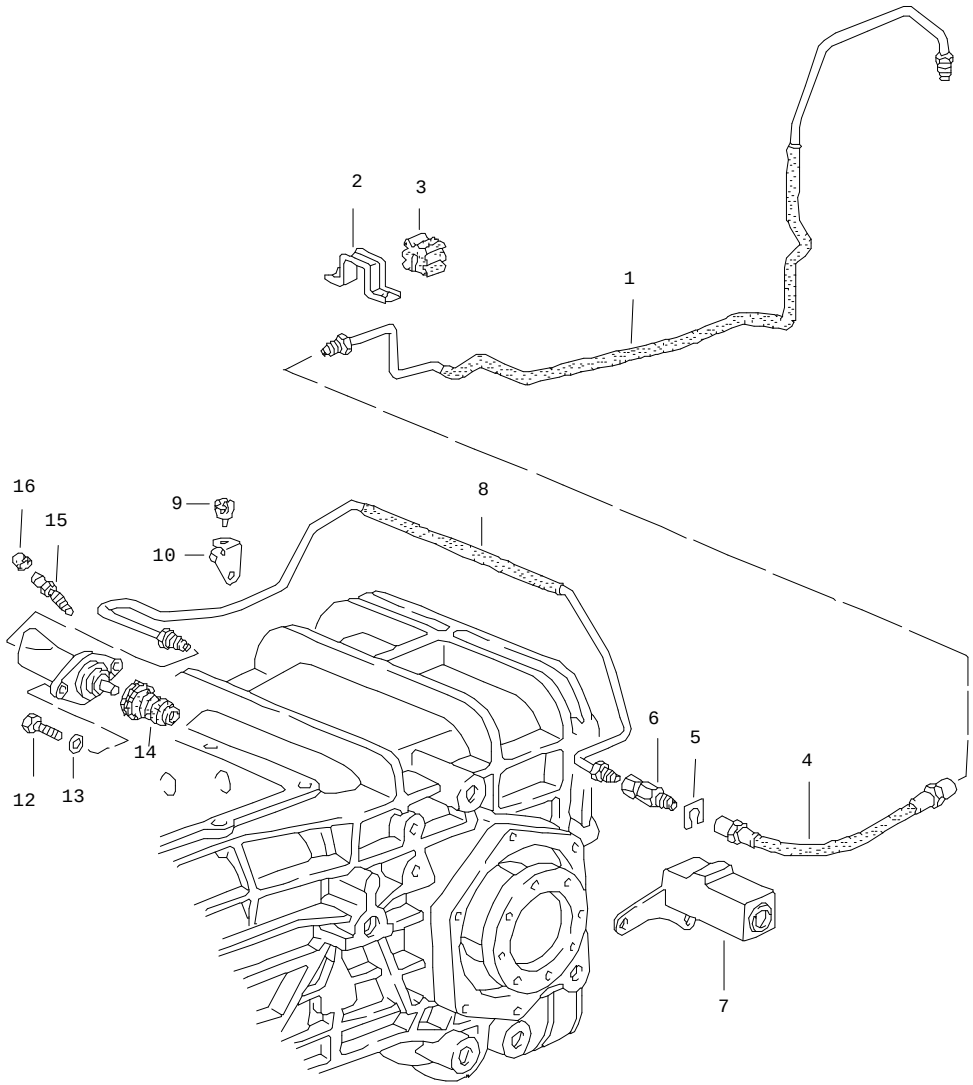

Pos	Part Number	Name	Remarks	Qty	Model
		manual transmission lock control 2	90-		G28.55 M 221
1	928 315 095 02	line		1	
2	928 315 807 00	support		1	
3	928 315 805 00	rubber mounting		1	
4	A 944 355 081 01	brake hose		1	
4	944 355 081 01	brake hose		1	
5	999 166 071 01	support		1	
6	928 315 211 03	pressure valve		1	
7	928 315 187 06	support		1	
8	928 315 085 04	connecting line		1	
9	999 651 190 40	cable clip		1	
10	928 315 189 02	support		1	
11	928 332 775 09	slave cylinder		1	
12	N 010 233 6	hexagon-head bolt M 8 X 28		2	
13	900 025 007 02	washer A 8,4		2	
14	928 332 051 02	bellows		1	
15	211 611 477 A	bleeder valve		1	
16	211 611 483	dust boot		1	
		- -- E N D -- -			

Model	Year	MG	SG	Illustration	Restrictions	Update				
928	91	3	06	306-00		179	15:37	02.09.2004	PORSCHE	PET	PORSCHE

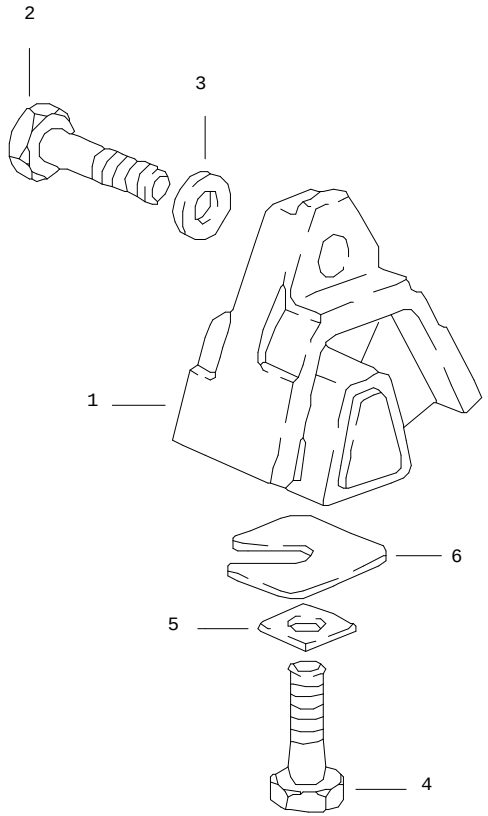

Pos	Part Number	Name	Remarks	Qty	Model
		manual transmission transmission suspension			G28.12/13/55
1	928 375 045 16	transmission mounting		2	
2	N 010 142 2	hexagon-head bolt M 12 X 1,5 X 50		2	
3	901 333 143 01	washer		2	
4	N 040 108 1	hexagon-head bolt M 12 X 1,5 X 40		2	
5	999 025 086 02	square washer 12,1 X 24		2	
6	928 331 520 01	washer 1 MM		X	
(6)	928 331 520 02	washer 2 MM		X	
(6)	928 331 520 03	washer 3 MM		X	
(6)	928 331 520 04	washer 4 MM		X	
		- -- E N D -- -			

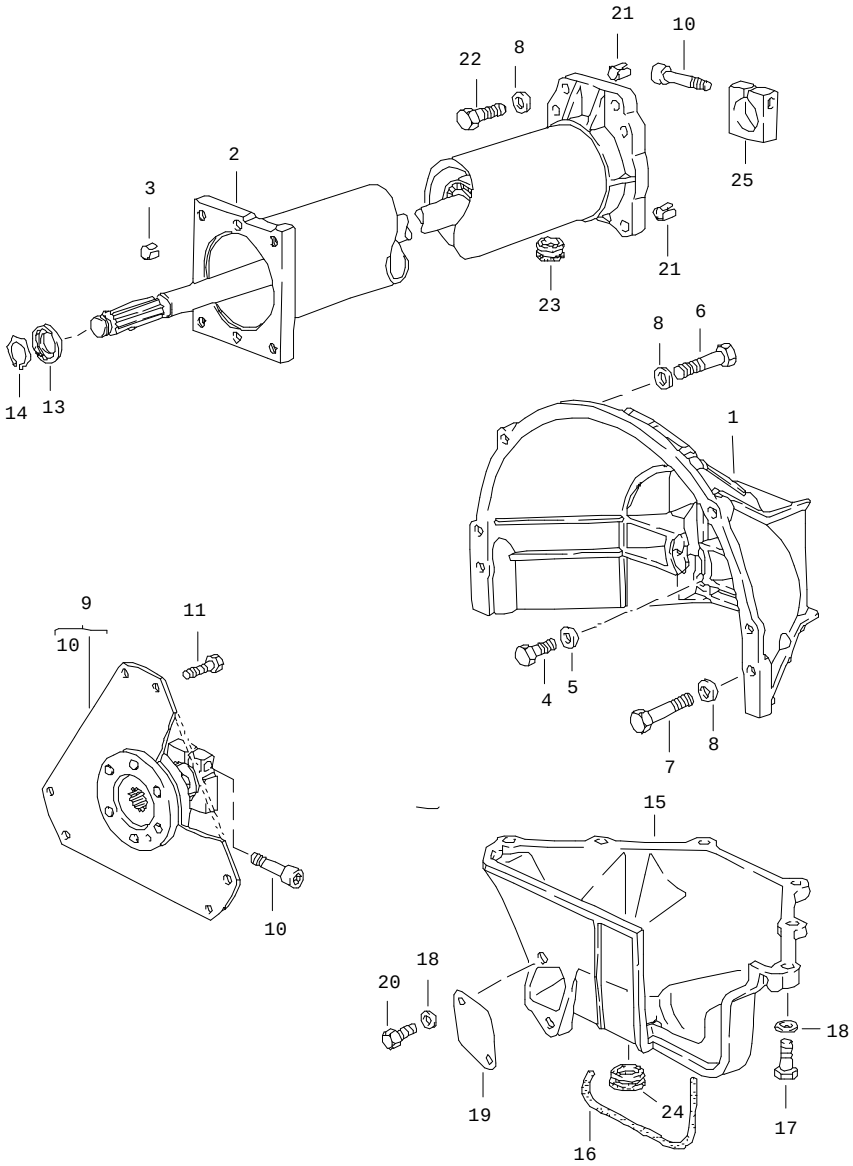

Pos	Part Number	Name	Remarks	Qty	Model
		automatic transmission central tube			A28.12/14/16
1	928 116 402 00	clutch housing	-88	1	
1	928 116 402 01	clutch housing	89-	1	
2	> 960 421 012 07	central tube with bearing and shaft		1	
3	900 197 042 01	roll pin 10 X 12		2	
4	N 010 445 2	hexagon-head bolt BM 10 X 45		4	
5	900 025 008 09	washer A 10,5		4	
6	N 010 142 2	hexagon-head bolt M 12 X 1,5 X 50		2	
7	N 010 165 3	hexagon-head bolt M 12 X 1,5 X 65		2	
8	N 011 531 14	washer A 13		8	
9	922 116 041 03	drive plate		1	
10	931 421 240 00	clamping screw		2	
11	003 323 699 A	hexagon-head bolt		1	
13	922 421 257 00	bush		1	
14	900 273 003 01	circlip 22 X 1,2		1	
15	928 116 412 01	cover	-88	1	
(15)	928 116 412 03	cover clutch housing	89-	1	
16	928 116 427 02	sealing strip D= 10 X 340		1	
17	900 075 099 02	hexagon-head bolt M 8 X 30		6	

Pos	Part Number	Name	Remarks	Qty	Model	Pos	Part Number	Name	Remarks	Qty	Model
18	900 025 007 02	washer A 8,4		8							
19	922 116 121 00	cover plate		1							
20	N 010 237 6	hexagon-head bolt M 8 X 12		2							
21	900 197 044 01	tensioning sleeve 16 X 16		2							
22	N 010 142 6	hexagon-head bolt M 12 X 1,5 X 50		4							
23	477 521 177	cap		1							
24	928 116 425 00	cap		1							
25	922 421 255 00	clamping piece		1							
		- -- E N D -- -									

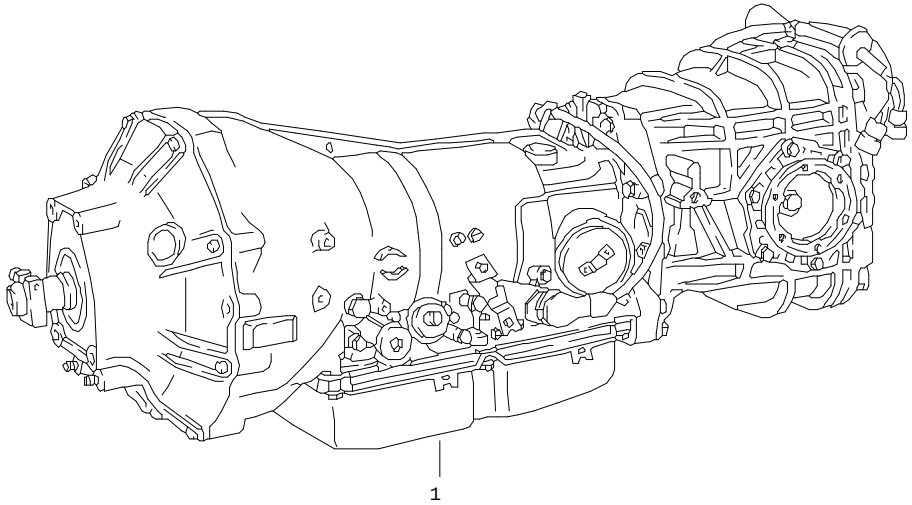

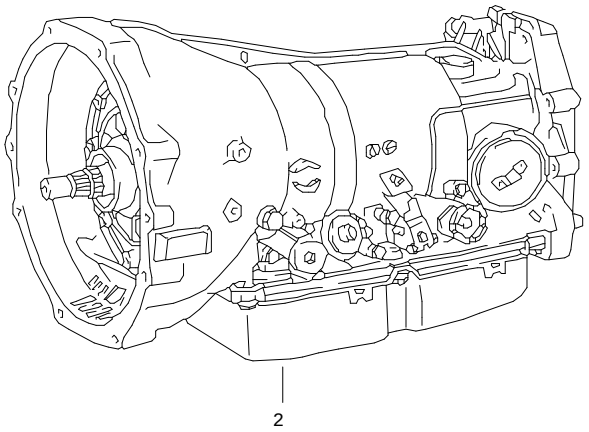

Pos	Part Number	Name	Remarks	Qty	Model
		automatic transmission replacement transmission			A28.12/14/16
1	960 300 004 12	automatic transmission without limited-slip differential	-88	1	A28.12
1	960 300 014 12	automatic transmission with limit.-slip different. 40%	-88	1	A28.12
1	960 300 004 14	automatic transmission without limited-slip differential	-88	1	A28.14
1	960 300 014 14	automatic transmission with limit.-slip different. 40%	-88	1	A28.14
1	960 300 004 16	automatic transmission without limited-slip differential	89	1	A28.16
1	960 300 014 16	automatic transmission with limit.-slip different. 40%	89	1	A28.16
1 >	960 300 030 16	automatic transmission with porsche limited-slip differential	90	1	A28.16 M 221
1 >	960 300 030 17	automatic transmission with porsche limited-slip differential	91-	1	A28.16 M 221
2 >	722 270 210 1	short transmission without converter and differential	-88	1	A28.12/14
2 >	722 270 320 1	short transmission without converter and differential	89-	1	A28.16

- -- E N D -- -

Model	Year	MG	SG	Illustration	Restrictions	Update				
928	91	3	07	307-10		179	15:37	02.09.2004	PORSCHE	PET	PORSCHE

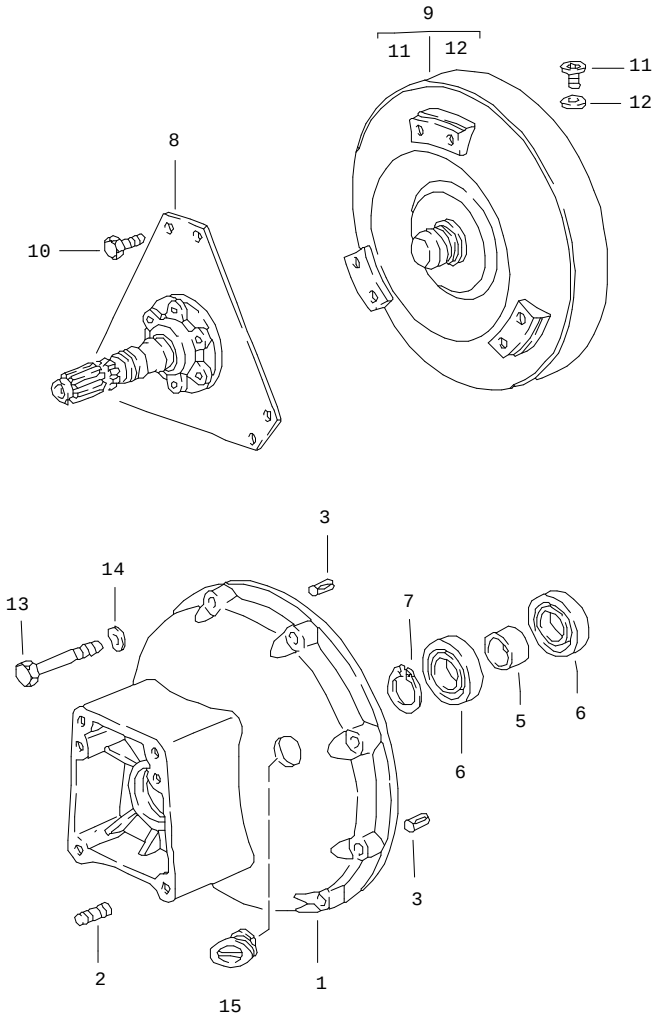

Pos	Part Number	Name	Remarks	Qty	Model
		automatic transmission converter converter housing			A28.12/14/16
1	960 321 101 03	converter housing front		1	
2	999 062 004 02	stud BM 8 X 12		2	
3	900 185 011 02	grooved pin		2	
5	922 421 260 00	spacer sleeve		1	
6	900 052 122 00	deep-groove ball bearing		2	
7	N 012 380 1	circlip 40 X 1,75		1	
8	960 116 042 02	drive plate		1	
9	722 250 060 2	torque converter		1	
10	003 323 699 A	hexagon-head bolt		6	
11	900 219 010 02	screw plug		1	
12	900 123 033 20	sealing ring		1	
13	N 014 715 3	pan-head screw M 8 X 45		8	
14	900 025 007 02	washer A 8,4		8	
15	960 321 115 01	plug		3	
		- -- E N D -- -			

Model	Year	MG	SG	Illustration	Restrictions	Update	15:37	02.09.2004	PORSCHE	PET	PORSCHE
928	91	3	07	307-15		179					

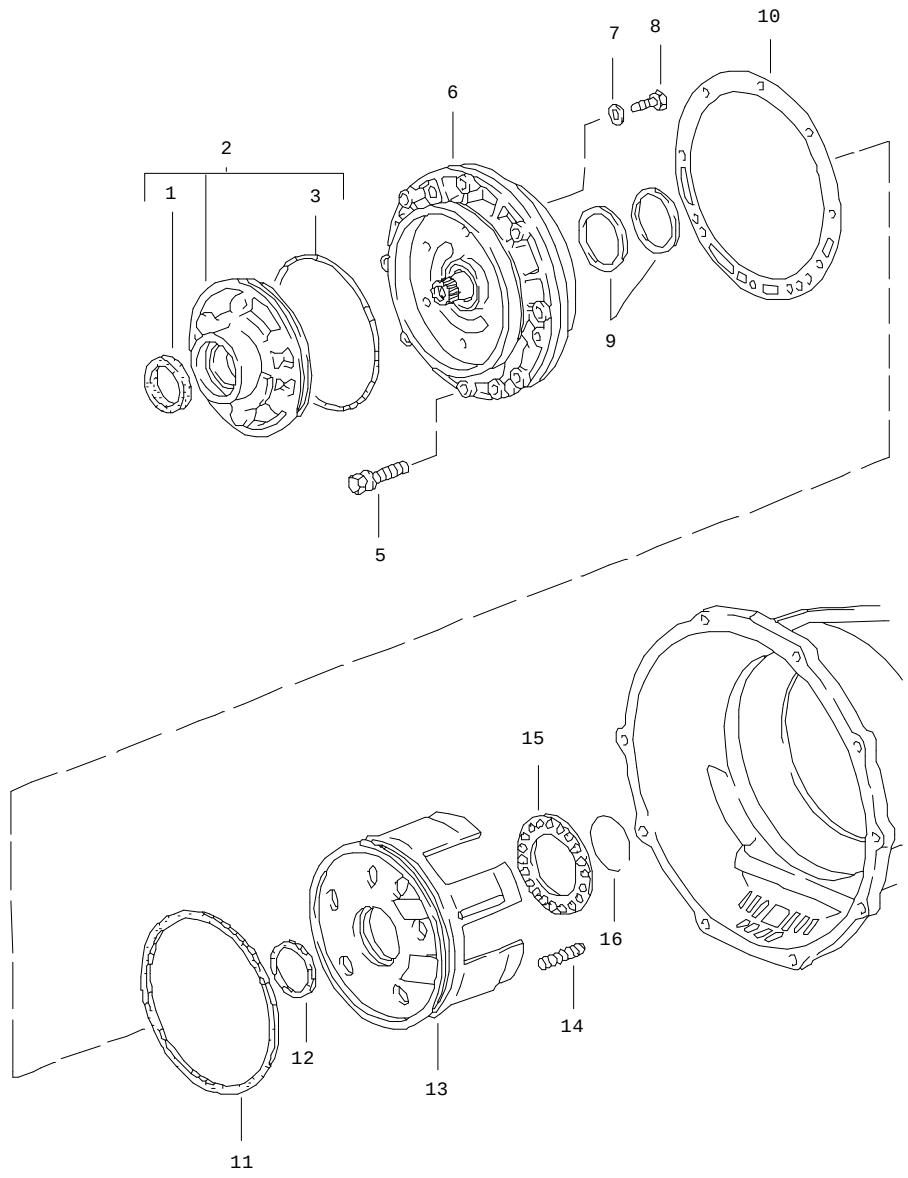

Pos	Part Number	Name	Remarks	Qty	Model
		automatic transmission oil pump			A28.12/14/16
1	018 997 044 7	sealing ring		1	
2	A 722 270 009 7	oil pump	-88	1	
2	A 140 270 009 7	oil pump	89	1	
2	140 270 009 7	oil pump	90-	1	
3	016 997 144 8	sealing ring		1	
5	960 307 915 00	screw M 8 X 40		9	
6	722 270 050 5	cover	-88	1	
(6)	722 270 170 5	cover	89-	1	A28.16
7	N 012 241 8	spring washer B 8		6	
8	N 040 222 2	hexagon-head bolt M 8 X 32		6	
9	126 272 095 5	sealing ring		2	
10	A 126 271 128 0	gasket		1	
10	126 271 128 0	gasket without asbestos		1	
11	126 272 019 2	boot		1	
12	126 272 009 2	boot		1	
13	126 272 093 1	piston	-88	1	
(13)	126 272 223 1	piston	89-	1	A28.16
14	100 993 040 2	spring	-88	20	
(14)	126 993 270 2	spring	89-	20	A28.16
15	126 272 036 4	concave washer		1	
16	126 994 043 5	snap ring		1	
		- -- E N D -- -			

Model	Year	MG	SG	Illustration	Restrictions	Update				
928	91	3	07	307-20		179	15:38	02.09.2004	PORSCHE	PET	PORSCHE

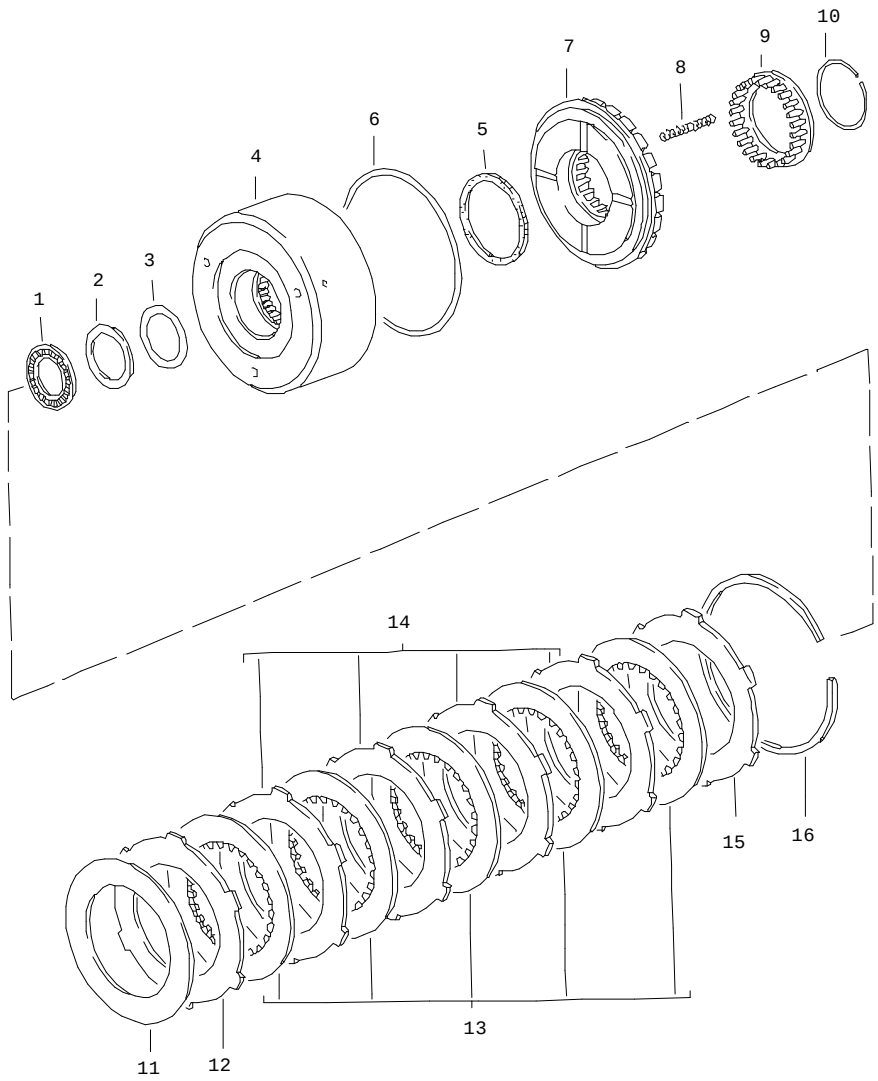

Pos	Part Number	Name	Remarks	Qty	Model
		automatic transmission clutch K 1			A28.12/14/16
1	007 981 681 0	needle-roller bearing	-88	1	
(1)	010 981 431 0	needle-roller bearing	89-	1	A28.16
2	000 272 256 2	thrust washer		1	
3	126 272 055 2	spacer 0,1 MM		X	
(3)	126 272 065 2	spacer 0,2 MM		X	
(3)	126 272 075 2	spacer 0,5 MM		X	
4	126 270 762 8	disc carrier K 1	-88	1	
(4)	126 270 274 9	disc carrier K 1	89-	1	A28.16
5	126 272 039 2	boot inner		1	
6	109 272 099 2	boot outer	-88	1	
(6)	100 272 019 2	boot outer	89-	1	A28.16
7	126 272 113 1	piston K 1	-88	1	
(7)	126 272 203 1	piston K 1	89-	1	A28.16
8	126 993 700 2	spring		24	
9	126 272 106 4	concave washer	-88	1	
(9)	126 272 086 4	concave washer	89-	1	A28.16
10	126 994 063 5	snap ring		1	
11	126 993 102 6	cup spring		1	
12	126 272 492 6	disc with external splines 2,0 MM		1 1	

Pos	Part Number	Name	Remarks	Qty	Model
13	126 272 062 5	inner disc 2,14 MM		1	
14	126 272 502 6	disc with external splines 3,5 MM		X	
(14)	126 272 512 6	disc with external splines 4,0 MM		X	
15	126 272 322 6	disc with external splines 4,5 MM		1	
16	126 994 053 4	snap ring 2,0 MM		2	
(16)	126 994 063 4	snap ring 2,5 MM		X	
(16)	126 994 073 4	snap ring 3,0 MM		X	
-	126 270 135 0	guide ring K 1	89-	1	A28.16
-	014 997 844 8	sealing ring K 1	89-	1	A28.16
		- -- E N D -- -			

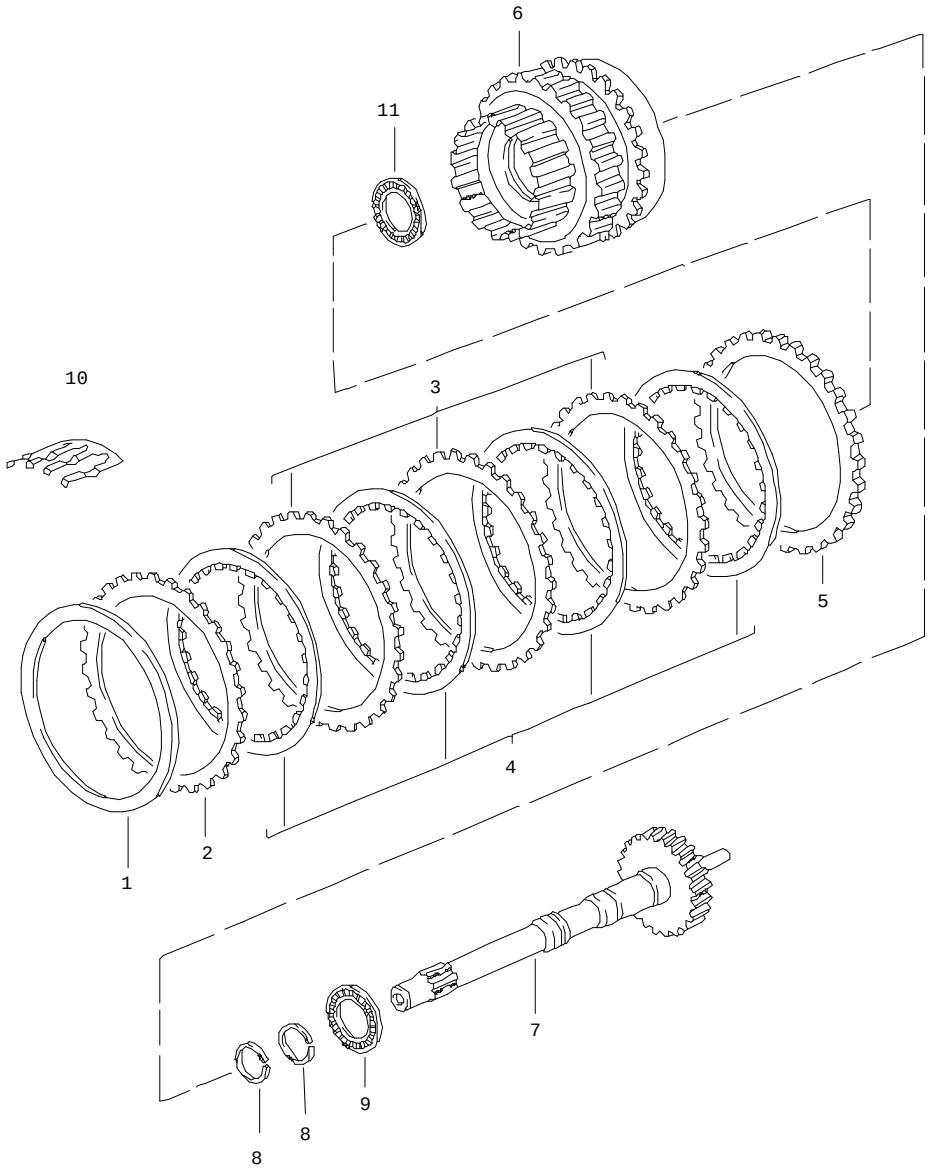

Pos	Part Number	Name	Remarks	Qty	Model
		automatic transmission drive shaft gear set			A28.12/14/16
1	126 272 095 2	spacer 2,5 MM		X	
(1)	126 272 105 2	spacer 3,0 MM		X	
(1)	126 272 115 2	spacer 3,5 MM		X	
2	126 272 682 6	disc with external splines 2,8 MM	-88	1	
(2)	126 272 682 6	disc with external splines 2,8 MM	89-	1	A28.16
(2)	126 272 642 6	disc with external splines 3,3 MM	89-	1	A28.16
(2)	126 272 652 6	disc with external splines 3,8 MM	89-	1	A28.16
3	126 272 672 6	disc with external splines 2,3 MM		X	
(3)	126 272 682 6	disc with external splines 2,8 MM		X	
4	126 272 092 5	inner disc 2,1 MM		4	
5	126 272 692 6	disc with external splines 7,7 MM		1	
6	126 270 044 3	planet-gear carrier A >> 894 132	-88	1	
(6)	126 270 414 3	planet-gear carrier A 894 133 >>	-88	1	
(6)	126 270 364 3	planet-gear carrier	89-	1	A28.16
7	722 270 002 5	drive shaft		1	
8	126 272 005 5	sealing ring		2	
9	007 981 991 0	needle-roller bearing	-88	1	
(9)	010 981 421 0	needle-roller bearing	89-	1	A28.16
10	126 993 041 5	spring		1	

Pos	Part Number	Name	Remarks	Qty	Model	Pos	Part Number	Name	Remarks	Qty	Model
(10)	126 993 182 6	cup spring reverse gear	89-	1	A28.16						
11	007 981 991 0	needle-roller bearing	-88	1							
(11)	010 981 431 0	needle-roller bearing	89-	1	A28.16						
		- -- E N D -- -									

Model	Year	MG	SG	Illustration	Restrictions	Update			
928	91	3	07	307-30		179	15:38	02.09.2004	PORSCHE PET PORSCHE

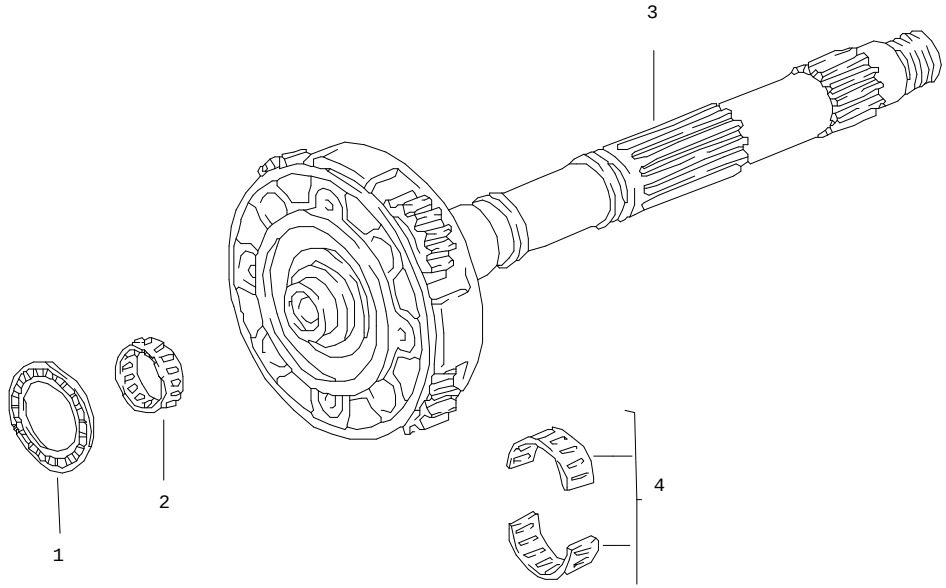

Pos	Part Number	Name	Remarks	Qty	Model
		automatic transmission planet-gear carrier			A28.12/14/16
1	007 981 571 0	needle-roller bearing		1	
2	008 981 001 0	needle-roller bearing		1	
3	722 270 144 3	planet-gear carrier		1	
4	011 981 821 0	needle-roller bearing		1	
		- -- E N D -- -			

Model	Year	MG	SG	Illustration	Restrictions	Update				
928	91	3	07	307-35		179	15:38	02.09.2004	PORSCHE	PET	PORSCHE

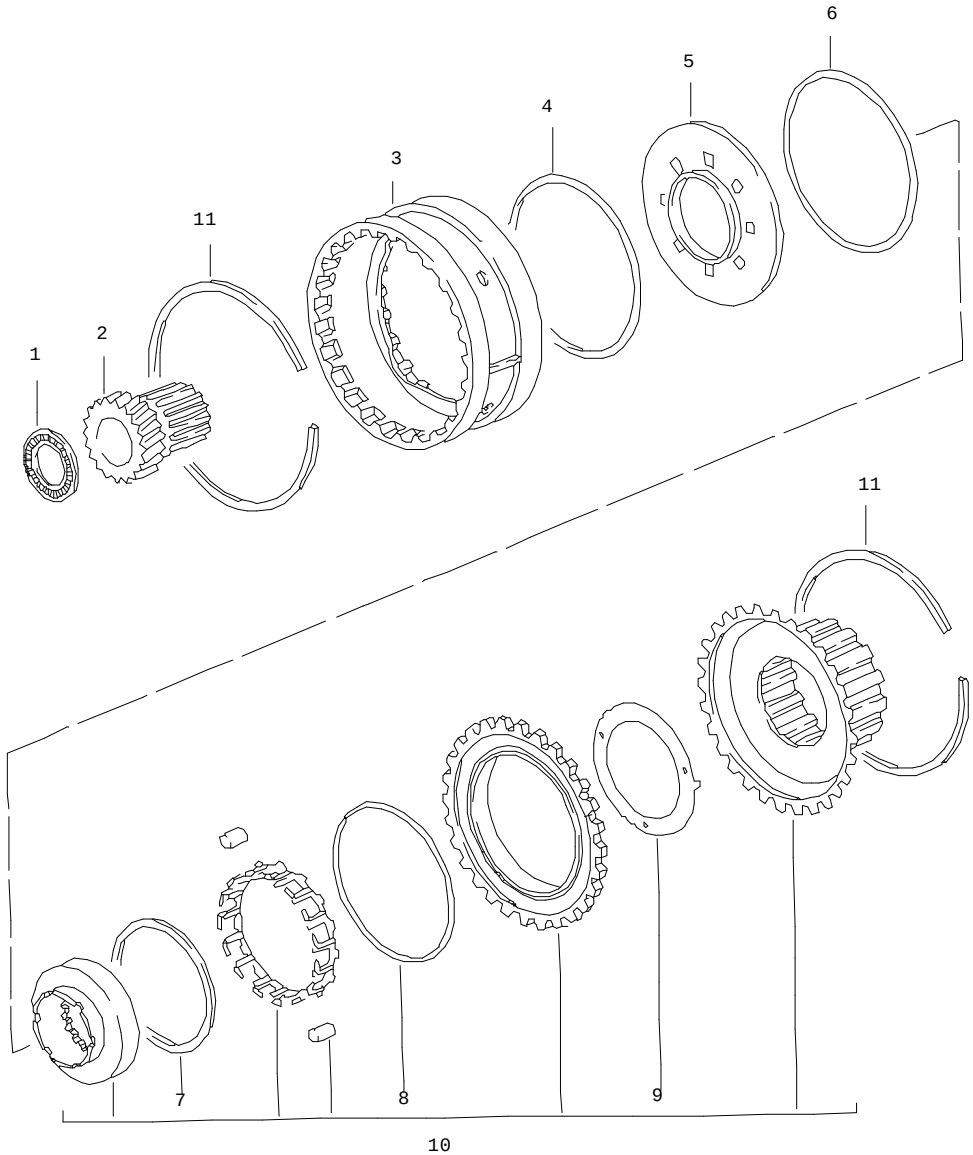

Pos	Part Number	Name	Remarks	Qty	Model
		automatic transmission free wheel lock			A28.12/14/16
1	007 981 571 0	needle-roller bearing		1	
2	126 272 000 7	sun gear		1	
3	126 272 100 8	driver		1	
4	126 272 175 2	shim 0,1 MM		X	
(4)	126 272 185 2	shim 0,2 MM		X	
(4)	126 272 195 2	shim 0,5 MM		X	
5	126 270 007 6	washer		1	
6	009 997 604 8	sealing ring A >> 723 862		1	
(6)	007 997 334 8	sealing ring A 723 863 >>		1	
7	126 272 176 2	thrust washer		1	
8	000 997 614 8	sealing ring		1	
9	126 272 306 2	thrust washer		1	
10	126 270 503 1	free wheel lock with disc carrier inner		1	
11	126 272 017 3	circlip		2	
		- -- E N D -- -			

Model	Year	MG	SG	Illustration	Restrictions	Update				
928	91	3	07	307-40		179	15:38	02.09.2004	PORSCHE	PET	PORSCHE

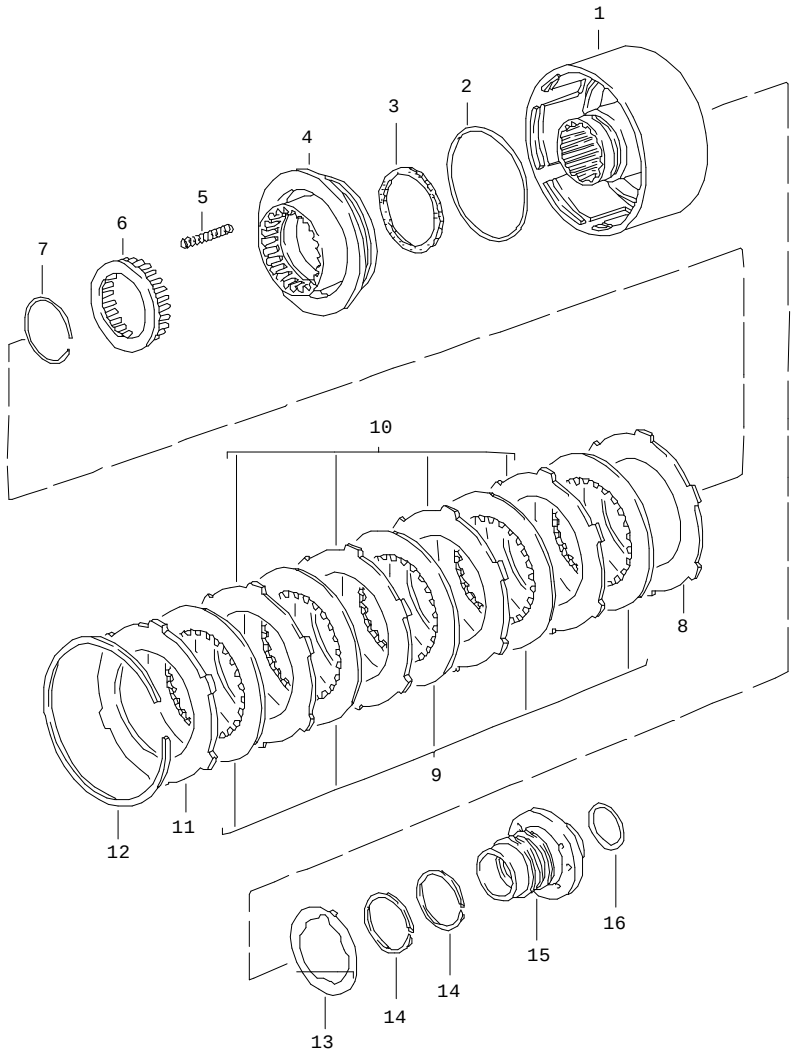

Pos	Part Number	Name	Remarks	Qty	Model
		automatic transmission clutch K 2			A28.12/14/16
1	126 270 892 8	disc carrier A >> 330 5964		1	
1	140 270 152 8	disc carrier A 330 5965 >>		1 1	
		order also: 126 270 206 2 124 270 018 9		 1 1	
2	126 272 025 5	sealing ring		1	
3	126 272 039 2	boot		1	
4	126 272 123 1	piston		1	
5	126 993 070 3	spring		21	
6	126 272 026 4	concave washer		1	
7	126 994 063 5	snap ring		1	
8	126 272 472 6	disc with external splines 2,0 MM		1	
9	126 272 072 5	inner disc 2,14 MM		5	
10	126 272 362 6	disc with external splines 3,0 MM		X	
(10)	126 272 482 6	disc with external splines 3,5 MM		X	
(11)	126 272 342 6	disc with external splines 4,5 MM		X	
12	126 272 027 3	circlip 2,0 MM		X	
(12)	126 994 033 4	circlip 2,5 MM		X	
(12)	126 994 043 4	circlip 3,0 MM		X	
13	126 272 226 2	thrust washer		1	
14	126 272 095 5	sealing ring		2	

Pos	Part Number	Name	Remarks	Qty	Model	Pos	Part Number	Name	Remarks	Qty	Model
15	722 272 014 5	flange		1							
16	006 997 754 8	sealing ring		1							
		- -- E N D -- -									

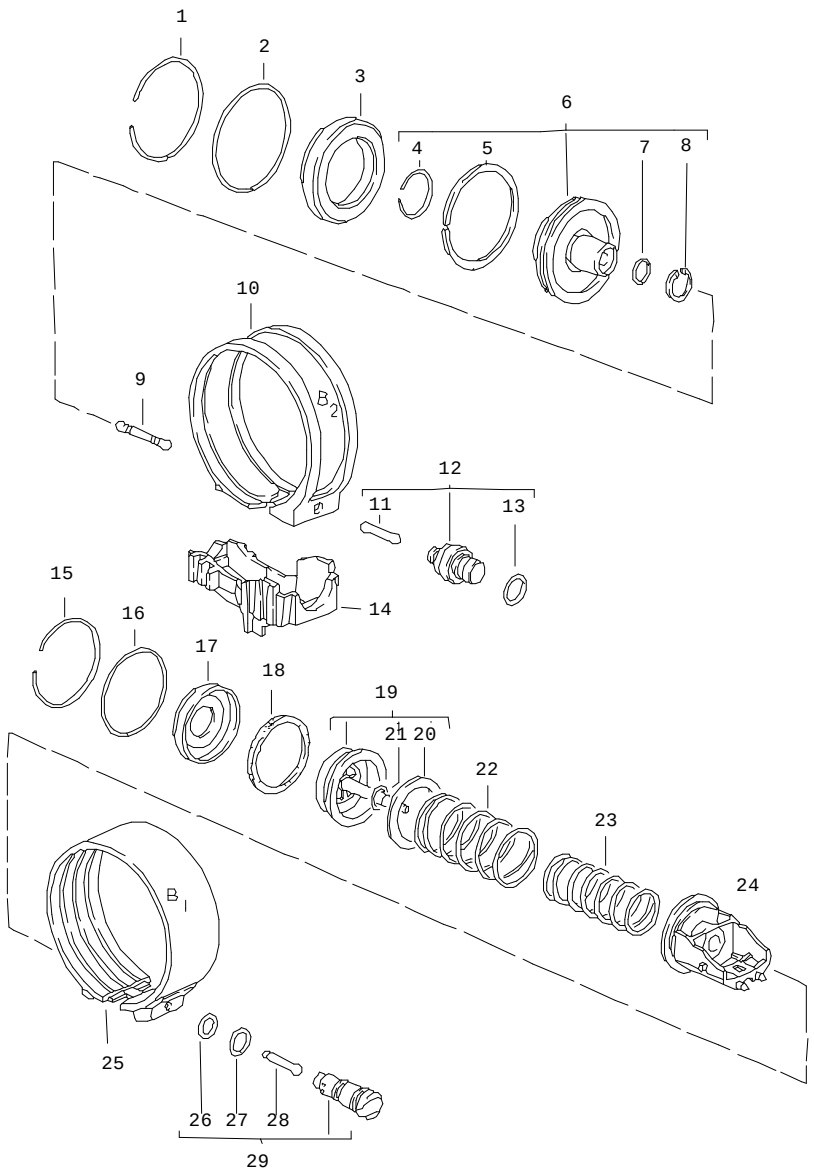

Pos	Part Number	Name	Remarks	Qty	Model
		automatic transmission brake bands			A28.12/14/16
1	126 994 013 5	snap ring		1	
2	* 005 997 704 8	sealing ring		1	
3	126 277 090 3	cover		1	
4	900 906 037 00	snap ring A 42		1	
5	126 277 245 5	sealing ring		1	
6	124 270 003 2	piston brake band A >> 909 453		1	
(6)	107 270 003 2	piston brake band A 909 454 >>	-88	1	
(6)	107 270 043 2	piston brake band	89-	1	A28.16
7	126 277 095 5	sealing ring		1	
8	900 042 005 01	circlip 25 X 1,2		1	
9	126 277 717 5	pin 47,2 MM		X	
(9)	126 277 727 5	pin 48,0 MM		X	
(9)	126 277 737 5	pin 48,8 MM		X	
(9)	126 277 747 5	pin 49,6 MM		X	
10	126 270 206 2	brake band A 383 608 >> 330 5964		1	
		order also: 124 270 018 9		1	
10	126 270 206 2	brake band without asbestos		1	
11	126 277 517 5	pin		1	

Pos	Part Number	Name	Remarks	Qty	Model
12	126 270 208 9	valve A >> 825 582		1	
(12)	126 270 368 9	valve A 825 583 >> 909 453		1	
(12)	126 270 338 9	valve A 909 454 >> 330 9639		1	
(12)	124 270 018 9	valve		1	
13	005 997 814 8	sealing ring		1	
14	126 277 094 0	support A >> 825 582		1	
(14)	140 277 004 0	support A 825 583 >>		1	
15	126 994 083 5	snap ring		1	
16	* 005 997 864 8	sealing ring		1	
17	126 277 020 3	cover		1	
18	115 272 109 2	boot		1	
19	126 270 973 2	piston		1	
20	900 234 109 02	shim 8 X 14 X 0,5		X	
(20)	900 234 003 02	shim 8 X 14 X 1,0		X	
21	000 997 024 8	sealing ring		1	
22	126 993 010 1	spring 95,3 MM		1	
23	126 993 570 1	spring 111,6 MM		1	
24	126 277 574 0	support		1	
25	126 270 186 2	brake band		1	
26	005 997 804 8	sealing ring		1	
27	010 997 084 5	sealing ring		1	
28	126 277 097 5	pin		1	
29	126 270 308 9	valve		1	

Pos	Part Number	Name	Remarks	Qty	Model
		- -- E N D -- -			

Model	Year	MG	SG	Illustration	Restrictions	Update				
928	91	3	07	307-50		179	15:39	02.09.2004	PORSCHE	PET	PORSCHE

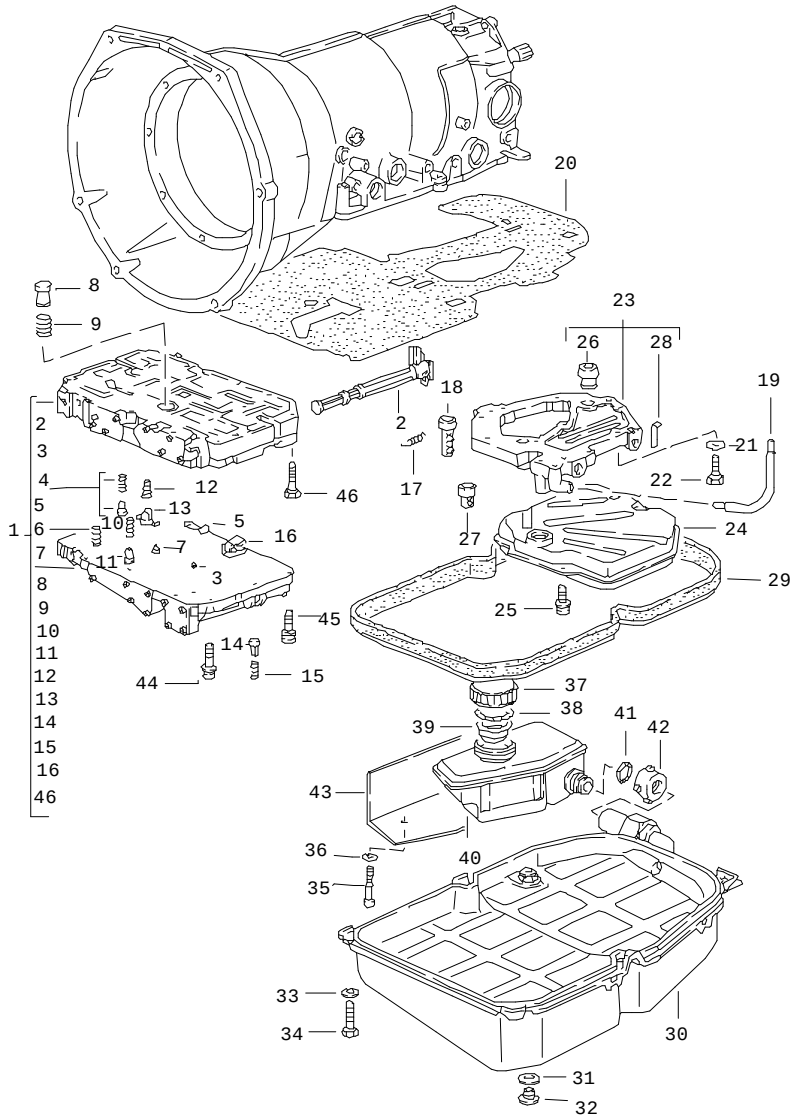

Pos	Part Number	Name	Remarks	Qty	Model
		automatic transmission valve body			A28.12/14/16
1	> 722 270 340 7	valve body	-88	1	
(1)	722 270 380 7	valve body	89-	1	A28.16
2	126 270 057 0	regulating valve		1	
3	116 991 002 9	ball		18	
4	126 270 047 0	slide		1	
5	126 270 258 9	valve		1	
6	722 993 080 1	spring		1	
7	115 993 150 5	spring		1	
8	126 277 193 6	valve		1	
9	126 993 200 2	spring		1	
10	115 993 280 4	spring		1	
11	126 270 198 9	valve		1	
12	126 993 690 3	spring		1	
13	126 277 223 6	valve		1	
14	126 277 263 6	valve		1	
15	126 993 730 3	spring		1	
16	126 270 288 9	valve		1	
(16)	126 270 218 9	valve		1	
17	722 993 001 0	spring		1	
18	126 270 029 8	filter		1	
19	126 277 004 7	oil tube		1	
20	* 126 277 108 0	gasket		1	
21	N 012 226 5	spring washer B 6		9	
22	N 010 220 3	hexagon-head bolt		9	
23	722 270 030 5	cover		1	

Model	Year	MG	SG	Illustration	Restrictions	Update				
928	91	3	07	307-50		179	15:39	02.09.2004	PORSCHE	PET	PORSCHE

Pos	Part Number	Name	Remarks	Qty	Model
24	* 126 277 029 5	oil filter		1	
25	960 307 911 00	screw M 5 X 12		3	
26	126 270 058 9	valve		1	
27	126 270 019 8	strainer		2	
28	126 277 007 3	lock 24 MM		1	
29	A 126 271 028 0	gasket		1	
29	126 271 108 0	oil sump gasket		1	
30	722 270 111 2	oil pan A >> 874 059		1	
(30)	722 270 111 2	oil pan A 874 060 >>		1	
31	* 900 123 062 30	gasket		1	
32	960 307 912 00	screw plug		1	
33	N 011 525 13	washer A 8,4		6	
34	N 010 244 11	hexagon-head bolt M 8 X 30		6	
35	900 067 008 02	pan-head screw M 6 X 40		2	
36	N 011 666 7	washer B 6,4		2	
37	960 307 481 00	threaded cover		1	
38	477 321 483 A	gasket		1	
39	477 321 479 A	strainer		1	
40	960 307 075 00	container		1	
41	477 321 487	o-ring		X	
42	477 321 485	union nut		1	
43	960 307 421 00	cover plate		1	
44	960 307 913 00	screw M 6 X 55		12	
45	960 307 914 00	screw M 6 X 50		3	
46	900 014 006 02	pan-head screw M 5 X 30		2	

- -- E N D -- -

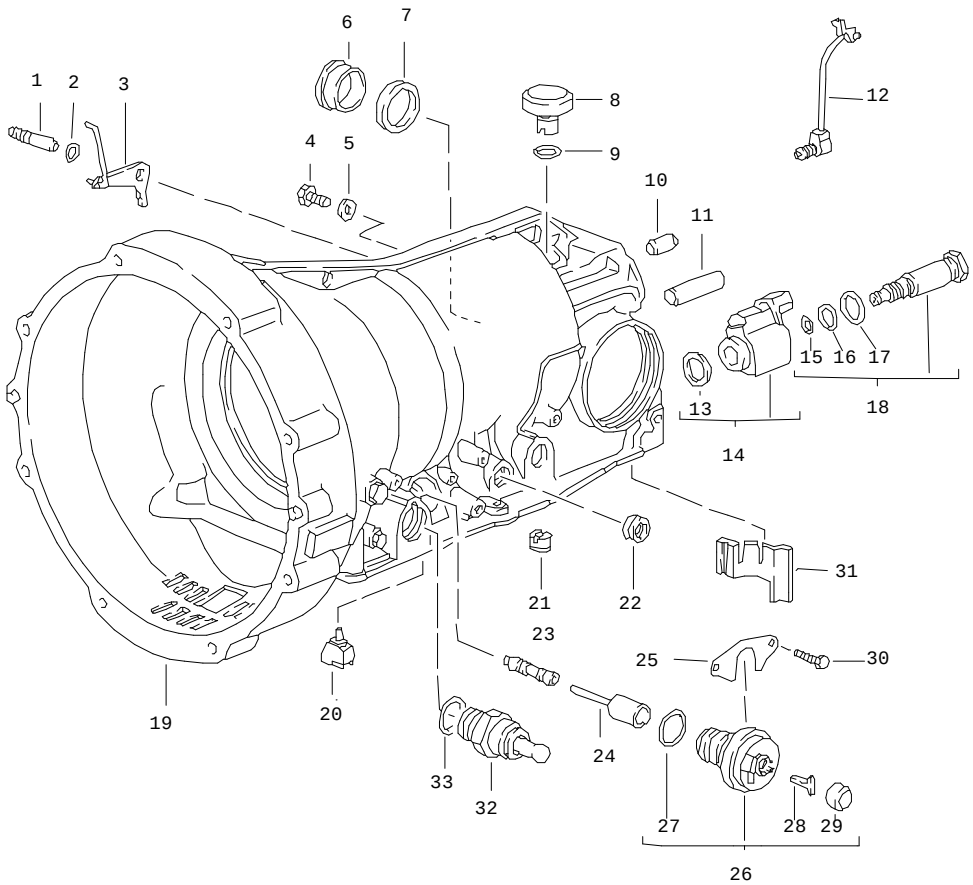

Pos	Part Number	Name	Remarks	Qty	Model
		automatic transmission transmission case accessories			A28.12/14/16
1	126 278 027 4	shaft		1	
2	005 997 744 8	sealing ring		1	
3	126 270 045 9	lever		1	
4	115 997 063 0	screw plug		3	
5	900 123 105 30	sealing ring		3	
6	126 277 035 0	bush	-88	1	
(6)	126 277 085 0	bush	89-	1	A28.16
7	006 997 734 7	sealing ring		1	
8	126 270 018 2	bleeder		1	
9	005 997 784 8	sealing ring		1	
10	900 012 163 00	straight pin		1	
(10)	N 013 220 2	straight pin		2	
11	126 991 000 1	bolt		1	
12	722 270 008 4	oil splash tube		1	
13	115 304 016 0	sealing ring		1	
14	000 304 279 0	control magnet -BINDER- only together with 000 304 229 0		1	
(14)	000 304 279 0	switch -ELEKTROTEILE- only together with 000 304 289 0		1	
15	001 997 354 8	sealing ring		1	
16	008 997 304 8	sealing ring		1	
17	008 997 314 8	sealing ring		1	
18	000 304 289 0	control magnet -BINDER- only together with 000 304 239 0		1	

Pos	Part Number	Name	Remarks	Qty	Model
(18)	000 304 289 0	control magnet -ELEKTROTEILE- only together with 000 304 279 0		1	
19	722 270 111 1	transmission case	-88	1	
(19)	722 270 141 1	transmission case	89-	1	A28.16
20	126 270 105 0	temperature restrictor red		1	
21	126 270 058 9	valve		1	
22	006 997 014 7	sealing ring		1	
23	126 277 213 2	piston		1	
24	126 277 207 5	pin		1	
25	126 277 054 0	support		1	
26	126 270 927 9	pressure control valve		1	
27	014 997 114 8	sealing ring		1	
28	126 277 044 0	support		1	
29	126 277 008 1	cover		1	
30	900 075 355 02	screw		2	
31	126 277 008 4	shim		1	
32	002 545 451 4	overload protection switch		1	
33	016 997 354 8	sealing ring		1	
		- -- E N D -- -			

Model	Year	MG	SG	Illustration	Restrictions	Update	15:39	02.09.2004	PORSCHE	PET	PORSCHE
928	91	3	07	307-60		179					

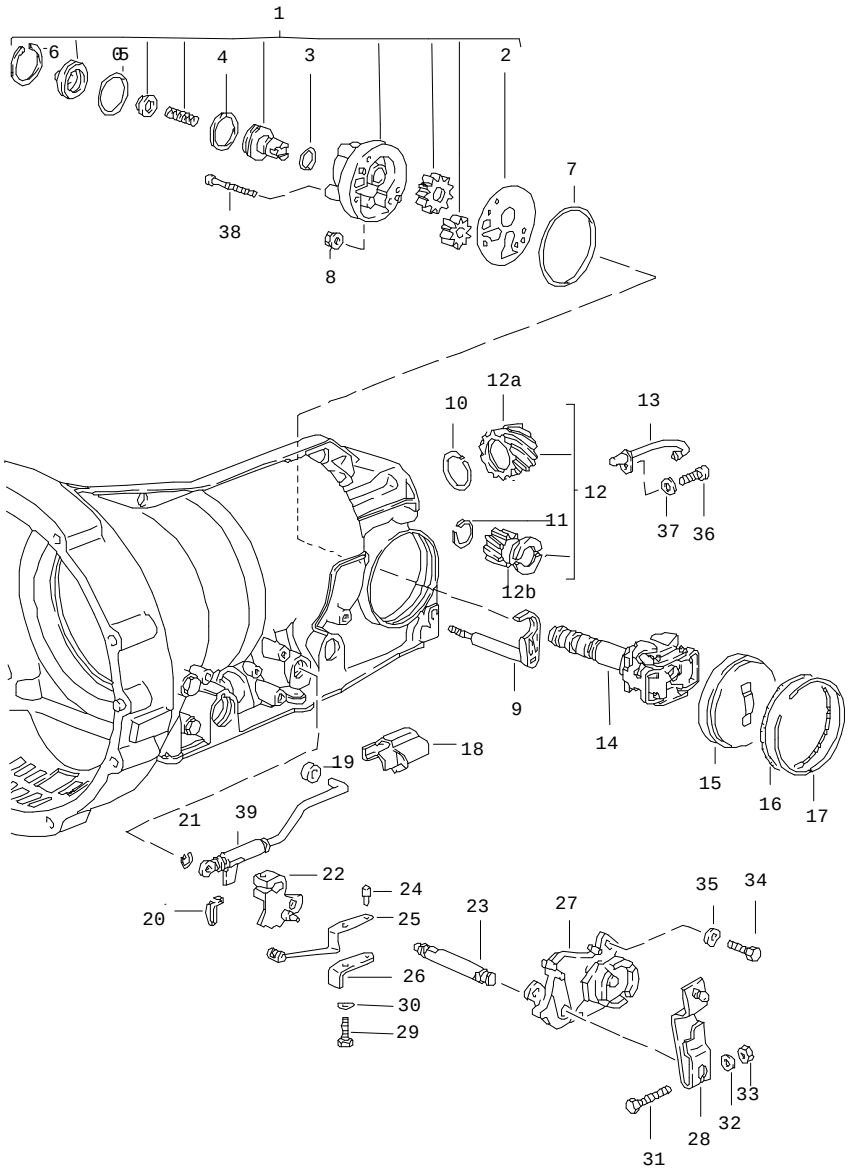

Pos	Part Number	Name	Remarks	Qty	Model
		automatic transmission transmission case installation parts			A28.12/14/16
1	126 270 029 7	secondary pump		1	
2	126 277 131 4	intermediate plate		1	
3	126 277 205 5	sealing ring		1	
4	005 997 844 8	sealing ring		1	
5	126 277 085 5	sealing ring		1	
6	900 042 045 07	circlip		1	
7	005 997 854 8	sealing ring		1	
8	960 302 902 00	nut		1	
9	126 270 005 9	lever		1	
10	722 994 023 5	snap ring		1	
11	999 152 053 01	snap ring		1	
12 A	126 270 044 2	gear wheel		1	
12A	722 274 031 5	gear wheel		1	
12B	126 274 041 5	gear wheel		1	
-	722 274 005 1	spacer ring A >> 874 041		1	
13	126 270 038 4	oil tube A >> 877 595		1	
14	126 270 097 4	centrifugal governor		1	
15	126 270 000 8	cover		1	
16	016 997 394 8	sealing ring		1	
17	126 994 023 5	snap ring		1	
18	126 277 607 7	guide piece		1	
19	126 278 001 7	roller		1	
20	126 271 039 4	shim		1	
21	900 116 003 02	circlip		1	

Pos	Part Number	Name	Remarks	Qty	Model	Pos	Part Number	Name	Remarks	Qty	Model
22	126 270 045 7	shift segment		1							
23	126 278 021 0	shaft		1							
24	126 991 031 0	bolt		1							
25	126 270 027 8	leaf spring		1							
26	126 278 034 0	support		1							
27	000 545 660 6	switch		1							
28	928 426 063 01	lever		1							
29	900 075 369 07	screw		1							
30	N 012 226 5	spring washer		1							
31	900 074 015 02	hexagon-head bolt		1							
32	N 011 524 7	washer		1							
33	900 076 010 02	hexagon nut		1							
34	900 075 162 02	hexagon-head bolt		2							
35	N 012 226 5	spring washer		2							
36	900 067 206 02	screw		1							
37	N 012 226 5	spring washer B 6		1							
38	N 044 703 3	pan-head screw		3							
39	126 270 036 5	linkage		1							
		- -- E N D -- -									

Model	Year	MG	SG	Illustration	Restrictions	Update	15:39	02.09.2004	PORSCHE	PET	PORSCHE
928	91	3	07	307-65		179					

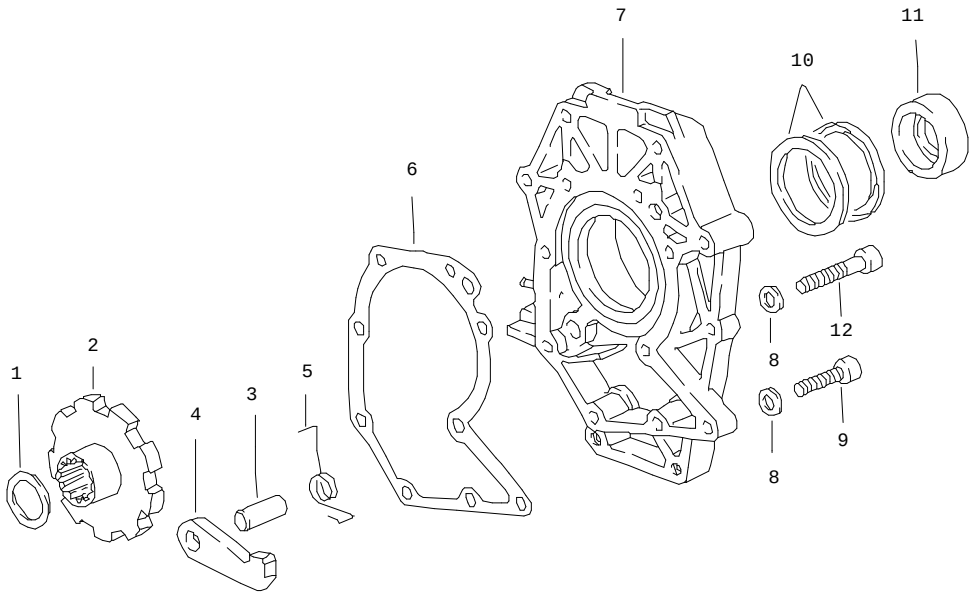

Pos	Part Number	Name	Remarks	Qty	Model
		automatic transmission intermediate plate parking lock			A28.12/14/16
1	126 272 075 2	spacer 0,5 MM		X	
2	126 272 011 7	gear wheel		1	
3	126 991 000 1	bolt		1	
4	123 278 002 1	pawl		1	
5	126 993 062 0	spring		1	
6	A 722 271 038 0	gasket		1	
6	722 271 038 0	gasket without asbestos		1	
7	960 321 031 03	intermediate plate		1	
8	722 990 034 0	washer		9	
9	900 067 025 02	screw		4	
10	999 113 307 40	sealing ring		2	
11	960 302 403 03	intermediate ring use also:		1	
11A	999 201 438 00	shim		1	
12	900 067 222 02	pan-head screw		5	
		- -- E N D -- -			

Model	Year	MG	SG	Illustration	Restrictions	Update	15:39	02.09.2004	PORSCHE	PET	PORSCHE
928	91	3	07	307-70		179					

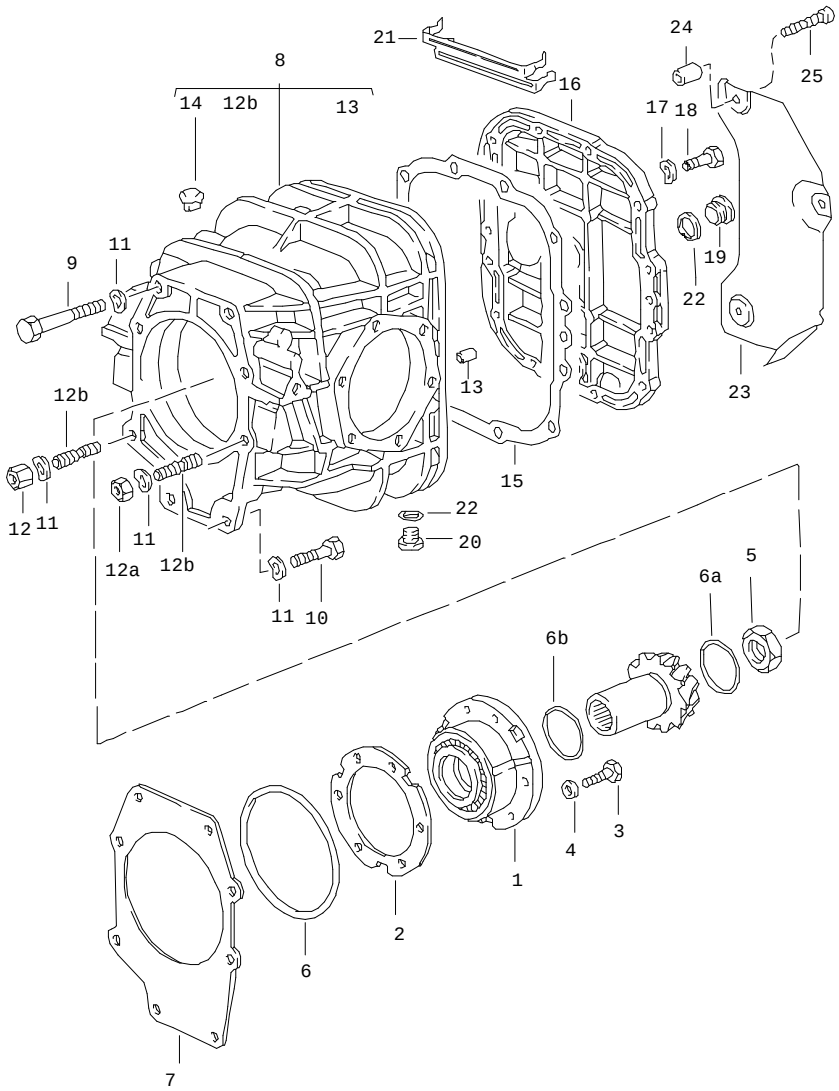

Pos	Part Number	Name	Remarks	Qty	Model
		automatic transmission differential 1			A28.12/14/16
1	960 302 063 09	bearing sleeve		1	
2	960 302 299 05	adjusting shim 0,15 MM		X	
2	960 302 299 06	adjusting shim 0,20 MM		X	
2	960 302 299 07	adjusting shim 0,25 MM		X	
2	960 302 299 08	adjusting shim 0,40 MM		X	
2	960 302 299 09	adjusting shim 0,50 MM		X	
3	N 014 726 7	pan-head screw M 8 X 30		6	
4	N 015 371 1	shake-proof washer		6	
5	922 302 282 00	collar nut		1	
6	999 701 743 40	o-ring 144,5 X 3		1	
6A	960 302 305 00	round seal		1	
6B	960 302 303 00	round seal		1	
7	960 302 297 05	adjusting shim 0,15 MM		X	
7	960 302 297 06	adjusting shim 0,20 MM		X	
7	960 302 297 07	adjusting shim 0,25 MM		X	
7	960 302 297 08	adjusting shim 0,40 MM		X	
7	960 302 297 09	adjusting shim 0,50 MM		X	
8	960 321 041 02	rear axle housing	-89	1	A28.12/14/16
(8)	960 321 041 03	rear axle housing	90-	1	A28.16 M 221

Pos	Part Number	Name	Remarks	Qty	Model	Pos	Part Number	Name	Remarks	Qty	Model
9	900 074 063 02	hexagon-head bolt M 10 X 55		4							
10	900 075 041 09	hexagon-head bolt M 10 X 25		2							
11	900 031 005 02	washer A 10,5		8							
12	999 076 027 02	nut		1							
12A	N 011 010 6	hexagon nut M 10		1							
12B	999 062 118 02	stud BM 10 X 28		1							
12B	999 062 182 02	stud BM 10 X 25		1							
13	900 012 086 00	straight pin		2							
14	928 301 311 01	bleeder		1							
15	928 301 395 03	gasket		1							
16	928 301 306 01	housing cover	-91	1							
16	928 301 306 07	housing cover	91-	1							
17	900 025 007 02	washer		12							
18	900 075 099 02	hexagon-head bolt M 8 X 30		12							
19	900 219 001 30	screw plug		1							
20	999 063 008 02	screw plug		1							
21	960 301 149 01	cover plate		1							
22	900 123 118 30	sealing ring		2							
23	960 321 305 00	heat protection plate		1							
24	960 321 307 00	spacer		3							
25	999 073 022 02	hexagon-head bolt		3							
		- -- E N D -- -									

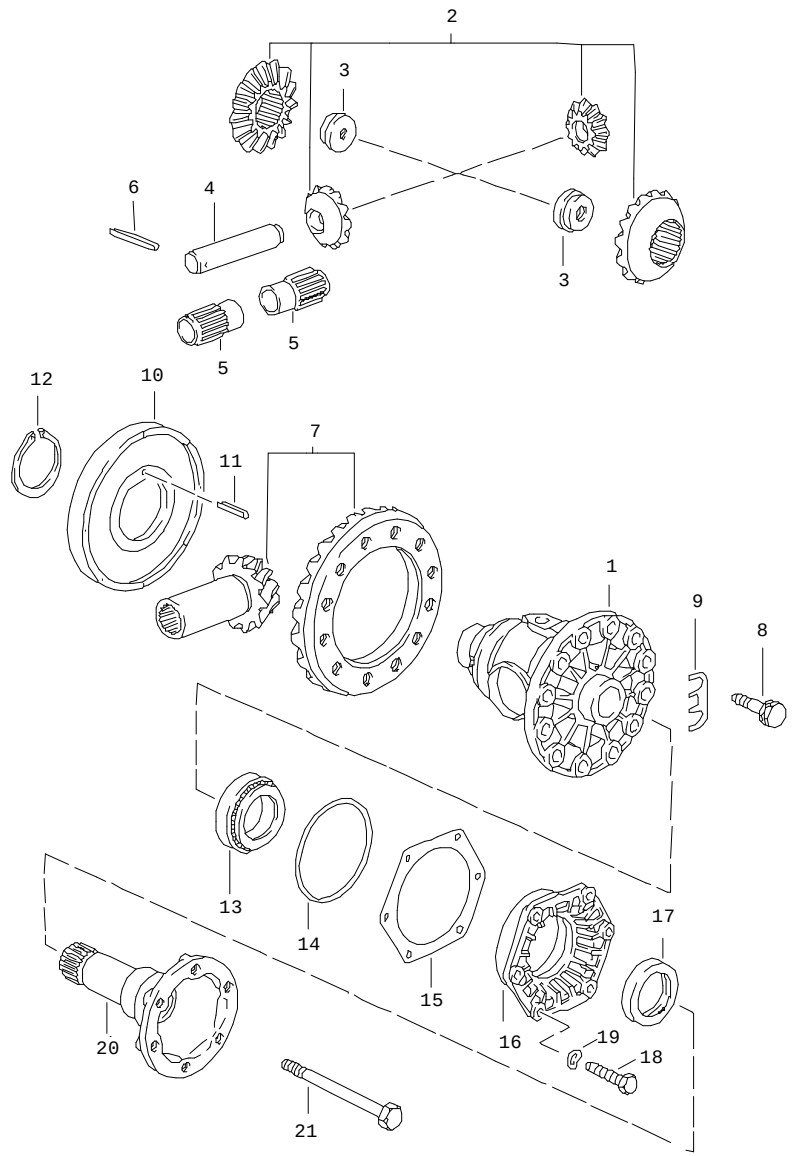

Pos	Part Number	Name	Remarks	Qty	Model
		automatic transmission differential 2			A28.12/14/16
1	928 332 212 08	differential housing	-89	1	
2	A 928 332 902 02	differential pinions 1 set	-89	1	
2	950 332 902 00	gear set 1 set	-89	1	
3	928 332 279 03	nut	-89	2	
4	928 332 207 07	differential bolt	-89	1	
5	999 201 237 00	needle cage	-89	2	
6	900 309 035 00	roll pin 5 X 40	-89	1	
7	960 302 911 00	ring gear and pinion shaft 33 : 15		1	A28.12
7	960 302 911 03	ring gear and pinion shaft 33 : 13		1	A28.14/16
8	928 332 276 03	hexagon-head bolt		12	
9	928 332 285 00	tab washer		6	
10	928 318 024 05	carrier disc with magnets	-89	1	
11	N 043 285 1	roll pin 5 X 18	-89	1	
12	999 152 089 01	snap ring	-89	1	
13	999 059 027 00	taper roller bearing		2	
14	* 928 332 217 02	o-ring		2	
15	928 332 219 00	adjusting shim 0,15 MM		X	
15	928 332 219 01	adjusting shim 0,20 MM		X	
15	928 332 219 02	adjusting shim 0,25 MM		X	
15	928 332 219 03	adjusting shim 0,50 MM		X	

Pos	Part Number	Name	Remarks	Qty	Model	Pos	Part Number	Name	Remarks	Qty	Model
15	928 332 219 04	adjusting shim 0,10 MM		X							
16	928 332 213 02	housing		2							
(16)	928 332 213 05	housing	90-	1	M 221						
17	* 928 332 215 02	shaft seal		2							
18	900 075 099 02	hexagon-head bolt M 8 X 30		12							
19	900 025 007 02	washer		12							
20	928 332 206 10	joint flange	-89	2							
20	928 332 206 20	joint flange	90-	2							
21	900 074 181 02	screw M 10 X 95		2							
		- -- E N D -- -									

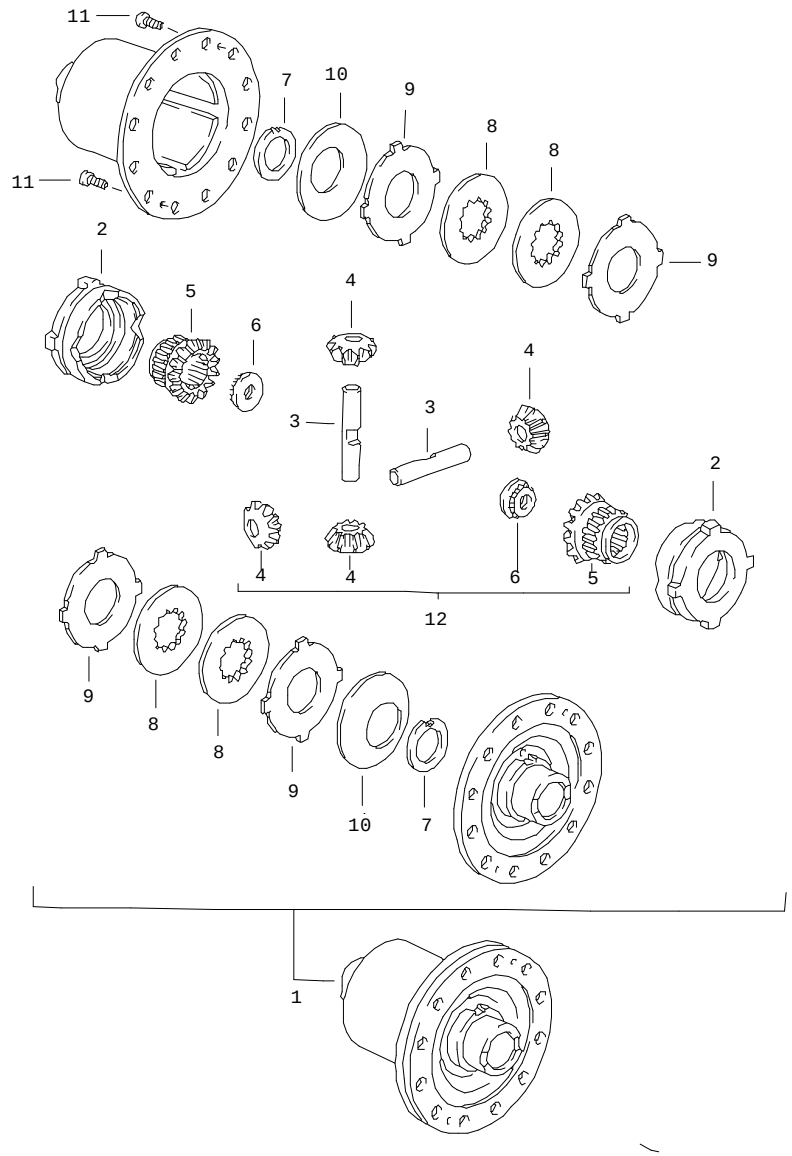

Pos	Part Number	Name	Remarks	Qty	Model
		automatic transmission limited-slip differential	-89		A28.12/14/16
1	928 332 052 20	limit.-slip different. 40%		1	
2	928 332 511 00	thrust ring		2	
3	928 332 541 00	differential shaft		2	
4	* -	bevel pinion		4	
5	* -	shaft bevel gear		2	
6	* 928 332 279 01	threaded disc		2	
7	901 332 561 11	thrust washer		2	
8	928 332 551 00	inner disc 2,0 MM		2	
9	917 332 552 10	disc with external splines 1,9 MM		6	
(9)	917 332 552 11	disc with external splines 2,0 MM		X	
(9)	917 332 552 12	disc with external splines 2,1 MM		X	
10	928 332 555 20	cup spring		2	
11	900 249 023 00	countersunk-head screw M 6 X 10		2	
12	928 332 905 00	differential pinions 1 set		1	
		- -- E N D -- -			

Model	Year	MG	SG	Illustration	Restrictions	Update				
928	91	3	07	307-81		179	15:40	02.09.2004	PORSCHE	PET	PORSCHE

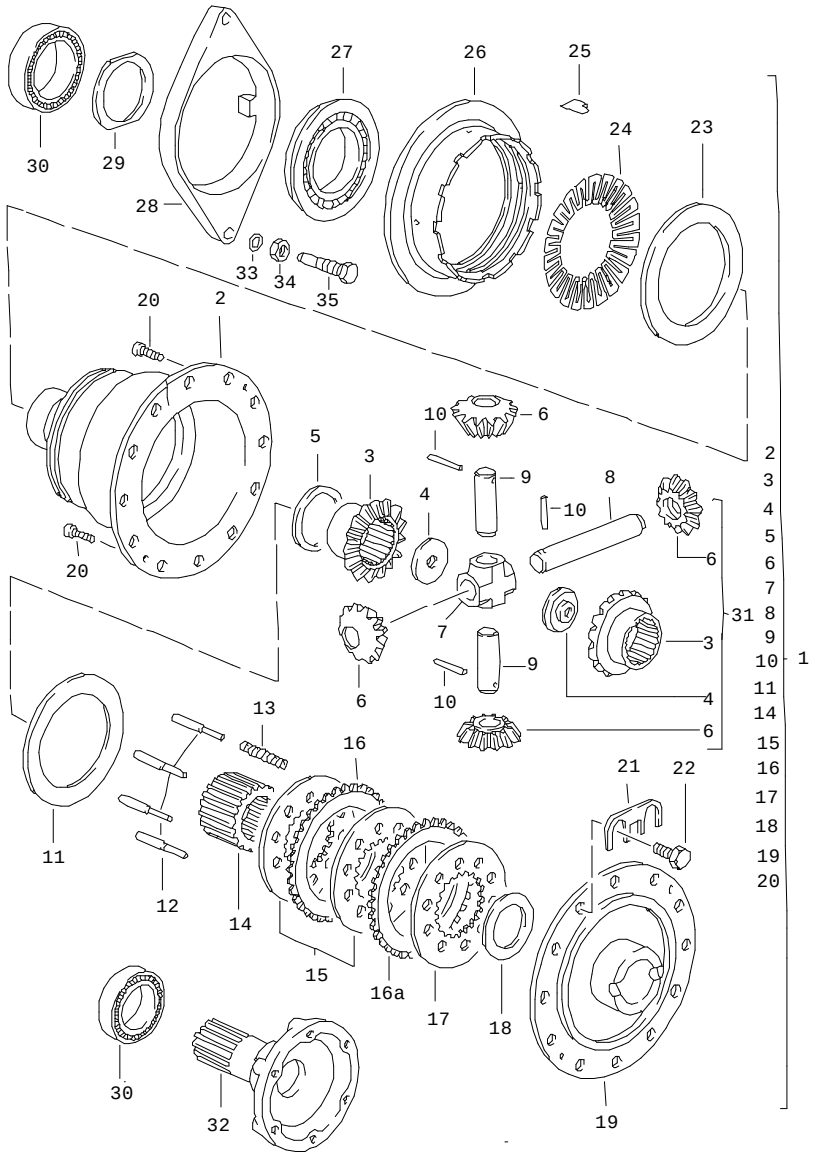

Pos	Part Number	Name	Remarks	Qty	Model
		automatic transmission porsche limited-slip differential	90-		A28.16 M 221
1	928 332 075 03	limited-slip differential		1	
2	928 332 701 15	housing		1	
3	* -	shaft bevel gear		2	
4	* 943 332 279 02	nut		2	
5	928 332 719 00	thrust washer 1,8 MM		X	
5	928 332 719 01	thrust washer 1,9 MM		X	
5	928 332 719 02	thrust washer 2,0 MM		X	
5	928 332 719 03	thrust washer 2,1 MM		X	
5	928 332 719 04	thrust washer 2,2 MM		X	
6	* -	bevel pinion		4	
7	928 332 745 00	4 way connector		1	
8	928 332 741 00	differential bolt		1	
9	928 332 743 00	differential bolt		2	
10	900 309 035 00	roll pin 5 X 40		3	
11	928 332 711 00	thrust ring		1	
12	928 332 715 08	pressure pin		4	
13	928 332 716 02	coil pressure spring		4	
14	928 332 748 03	disc carrier		1	
15	928 332 728 00	inner disc		5	
16	928 332 726 05	disc with external splines 1,5 MM		8	
16	928 332 726 03	disc with external splines 1,1 MM		X	

Pos	Part Number	Name	Remarks	Qty	Model
16	928 332 726 04	disc with external splines 1,3 MM		X	
16	928 332 726 06	disc with external splines 1,7 MM		X	
16	928 332 726 07	disc with external splines 1,9 MM		X	
16	928 332 726 08	disc with external splines 2,1 MM		X	
16	928 332 726 09	disc with external splines 2,3 MM		X	
16	928 332 726 10	disc with external splines 2,5 MM		X	
16	928 332 726 11	disc with external splines 2,7 MM		X	
17	928 332 724 00	inner disc		5	
18	928 332 720 50	thrust washer 1,8 MM		X	
18	928 332 720 51	thrust washer 1,9 MM		X	
18	928 332 720 52	thrust washer 2,0 MM		X	
18	928 332 720 53	thrust washer 2,1 MM		X	
18	928 332 720 54	thrust washer 2,2 MM		X	
18	928 332 720 55	thrust washer 2,3 MM		X	
18	928 332 720 56	thrust washer 2,4 MM		X	
19	928 332 706 10	housing cover		1	
20	900 249 008 02	countersunk-head screw M 6 X 12		2	
21	928 332 285 00	tab washer		6	
22	928 332 276 03	hexagon-head bolt		12	
23	928 332 713 02	thrust ring		1	
24	928 332 756 06	leverage washer		1	
25	950 332 753 02	tab washer		1	
26	928 332 077 00	adjusting nut	90	1	
26	928 332 750 01	adjusting nut	91	1	
27	928 332 761 04	engaging mount		1	
28	928 332 771 02	engaging lever		1	
29	928 332 718 00	washer		1	
30	999 059 027 00	taper roller bearing		2	
31	928 332 907 00	differential pinions 1 set		1	
32	928 332 206 20	joint flange		2	
33	900 123 043 30	sealing ring A 12 X 15,5		1	
34	N 011 020 8	hexagon nut		1	
35	928 332 271 05	hexagon-head bolt		1	

- -- E N D -- -

Model	Year	MG	SG	Illustration	Restrictions	Update				
928	91	3	07	307-82		179	15:40	02.09.2004	PORSCHE	PET	PORSCHE

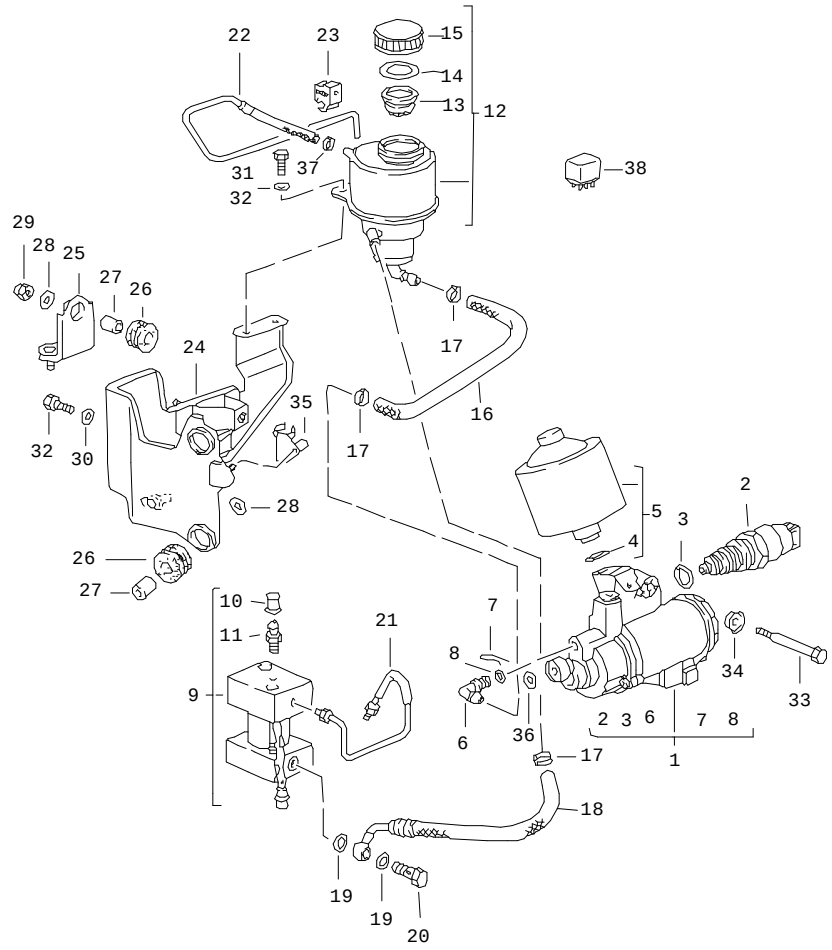

Pos	Part Number	Name	Remarks	Qty	Model
		automatic transmission lock control 1	90-		A28.16 M 221
1	928 315 906 00	pump		1	
2	964 606 904 00	pressure switch		1	
3	999 707 094 40	o-ring 17,3 X 2,4		1	
4	999 707 123 40	o-ring 11,3 X 2,4		1	
5	928 315 905 00	pressure accumulator		1	
6	999 230 366 40	elbow		1	
7	999 021 003 00	lock		1	
8	999 707 075 40	o-ring		1	
9	928 315 163 00	valve support		1	
10	930 351 919 00	ventilation valve		1	
11	930 351 927 00	dust boot		1	
12	928 315 013 01	expansion tank		1	
13	211 611 381 B	strainer		1	
14	901 355 908 00	gasket		1	
15	911 355 905 02	cover		1	
16	928 315 801 00	feed line		1	
17	999 512 532 00	terminal		3	
18	928 315 098 01	hose line return		1	
19	900 123 033 20	sealing ring		2	
20	900 175 002 02	screw		1	
21	928 315 091 02	connecting line		1	
22	928 315 097 01	vent line		1	
23	999 591 930 40	support		1	
24	928 315 043 02	support		1	

Pos	Part Number	Name	Remarks	Qty	Model
25	928 315 047 02	bracket		1	
26	964 356 635 00	rubber mounting		3	
27	928 355 633 00	bush		3	
28	N 011 550 1	washer B 6,5		X	
29	900 910 010 09	lock nut M 6		X	
30	N 011 666 7	washer B 6,4		4	
31	900 075 057 02	hexagon-head bolt M 6 X 16		2	
32	999 072 005 09	hexagon-head bolt M 6 X 12		2	
33	999 074 043 02	hexagon-head bolt M 6 X 65		1	
34	999 025 202 02	washer		1	
35	911 612 450 00	support		1	
36	900 025 007 02	washer A 8,4		1	
37	999 512 527 00	clamp		1	
38	964 615 135 00	relay for pump		1	
-	A 993 606 153 00	lateral accelerat. sensor		1	
-	993 606 153 00	lateral accelerat. sensor		1	
		- -- E N D -- -			

Pos	Part Number	Name	Remarks	Qty	Model

Model	Year	MG	SG	Illustration	Restrictions	Update				
928	91	3	07	307-83		179	15:40	02.09.2004	PORSCHE	PET	PORSCHE

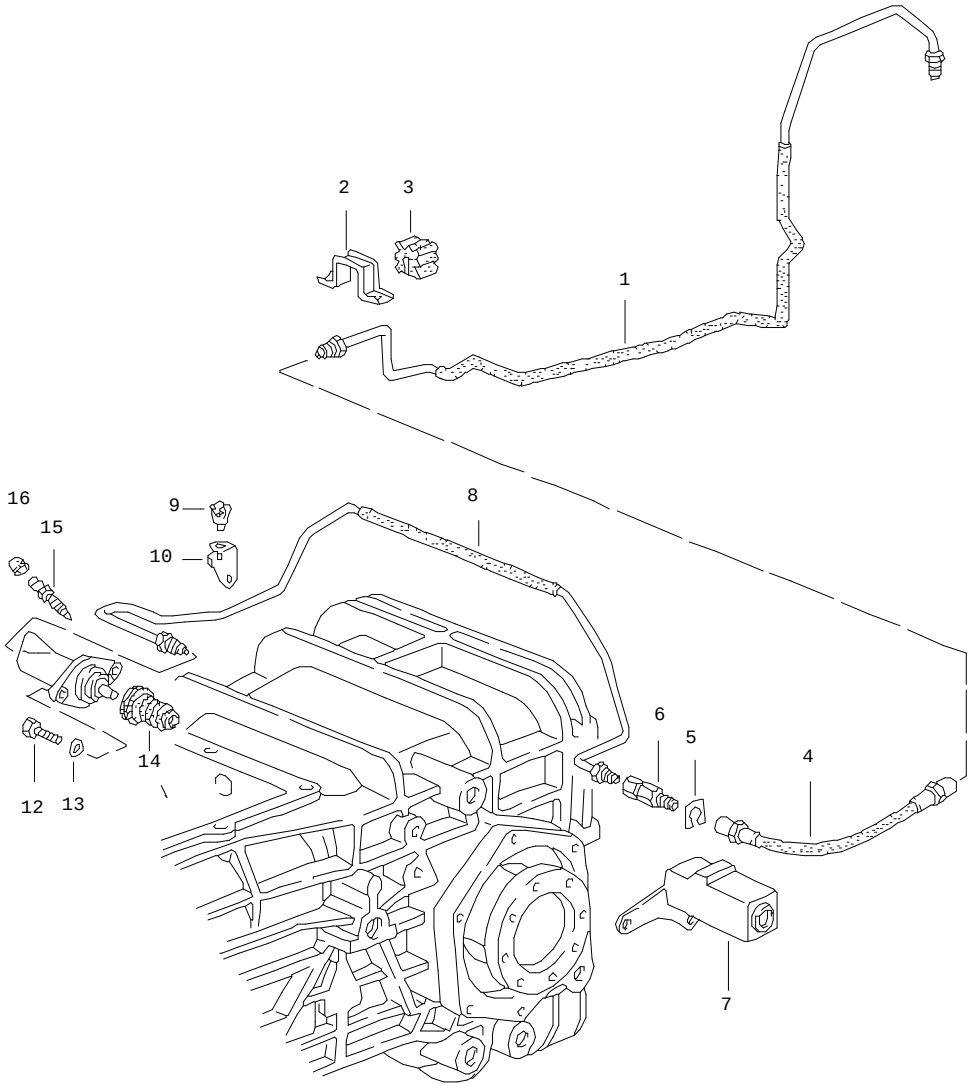

Pos	Part Number	Name	Remarks	Qty	Model
		automatic transmission lock control 2	90-		A28.16 M 221
1	928 315 095 02	line		1	
2	928 315 807 00	support		1	
3	928 315 805 00	rubber mounting		1	
4	A 944 355 081 01	brake hose		1	
4	944 355 081 01	brake hose		1	
5	999 166 071 01	support		1	
6	928 315 211 03	pressure valve		1	
7	928 315 187 06	support		1	
8	928 315 085 04	connecting line		1	
9	999 651 190 40	cable clip		1	
10	928 315 189 02	support		1	
11	928 332 775 09	slave cylinder		1	
12	N 010 233 6	hexagon-head bolt M 8 X 28		2	
13	900 025 007 02	washer A 8,4		2	
14	928 332 051 02	bellows		1	
15	211 611 477 A	bleeder valve		1	
16	211 611 483	dust boot		1	
		- -- E N D -- -			

Model	Year	MG	SG	Illustration	Restrictions	Update				
928	91	3	07	307-85		179	15:41	02.09.2004	PORSCHE	PET	PORSCHE

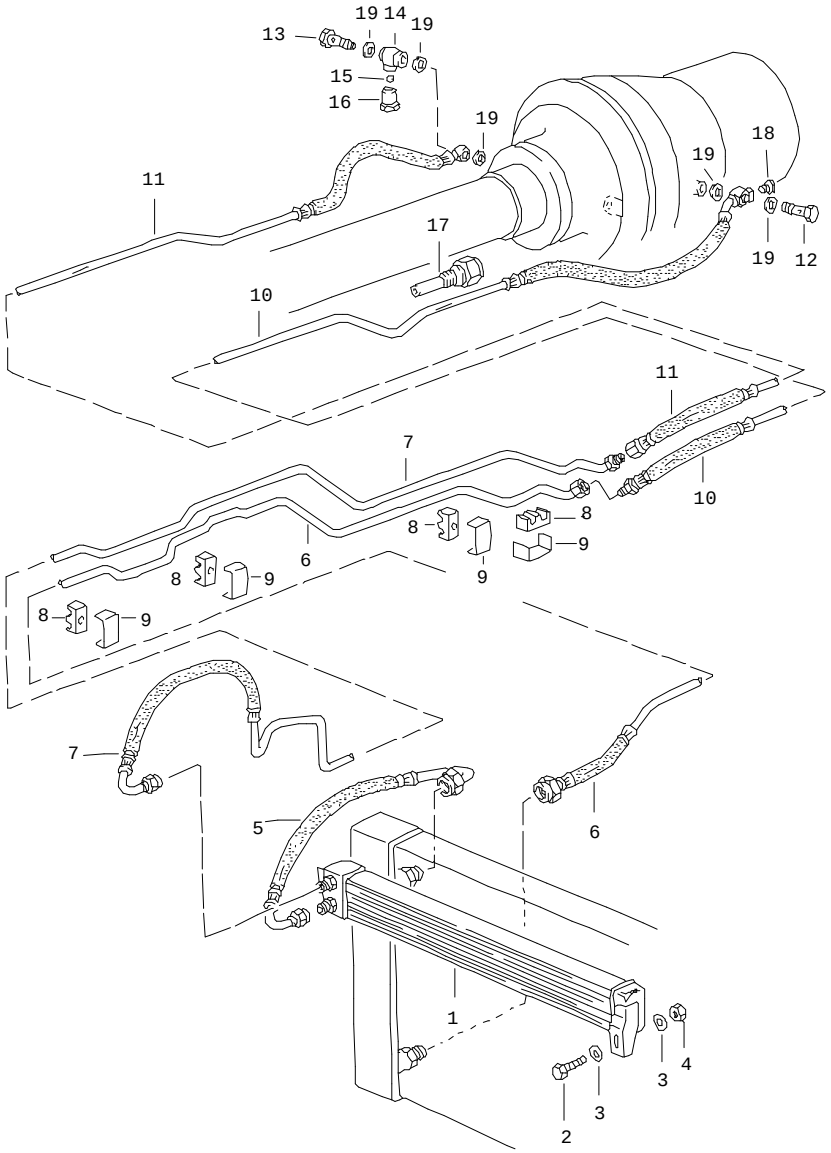

Pos	Part Number	Name	Remarks	Qty	Model
		automatic transmission atf cooler atf lines for cars with front muffler MOD.87-12.88 (MOD.89) for cars with catalytic converter MOD.87			A28.12/14/16
1	928 307 027 06	transmission oil cooler		1	
2	900 075 057 02	hexagon-head bolt M 6 X 16		2	
3	N 011 524 7	washer A 6,4		4	
4	900 076 010 02	hexagon nut		2	
5	928 307 072 01	oil pipe		1	
6	960 307 028 02	oil pipe supply		1	
7	928 307 073 01	oil pipe return		1	
8	928 356 525 01	rubber mounting		5	
9	928 356 555 00	clamp		5	
10	928 307 070 00	oil pipe supply		1	
11	960 307 039 00	oil pipe return		1	
12	999 134 030 02	banjo bolt M 14 X 1,5		1	
13	960 307 161 01	banjo bolt		1	
14	960 307 057 01	nipple		1	
15	N 025 657 1	ball		1	
16	960 307 163 00	screw plug		1	
17	928 606 152 00	temperature switch		1	
18	900 219 002 02	screw plug		1	

Pos	Part Number	Name	Remarks	Qty	Model	Pos	Part Number	Name	Remarks	Qty	Model
19	900 123 007 30	sealing ring A 14 X 18		X							
		- -- E N D -- -									

Model	Year	MG	SG	Illustration	Restrictions	Update				
928	91	3	07	307-86		179	15:41	02.09.2004	PORSCHE	PET PORSCHE

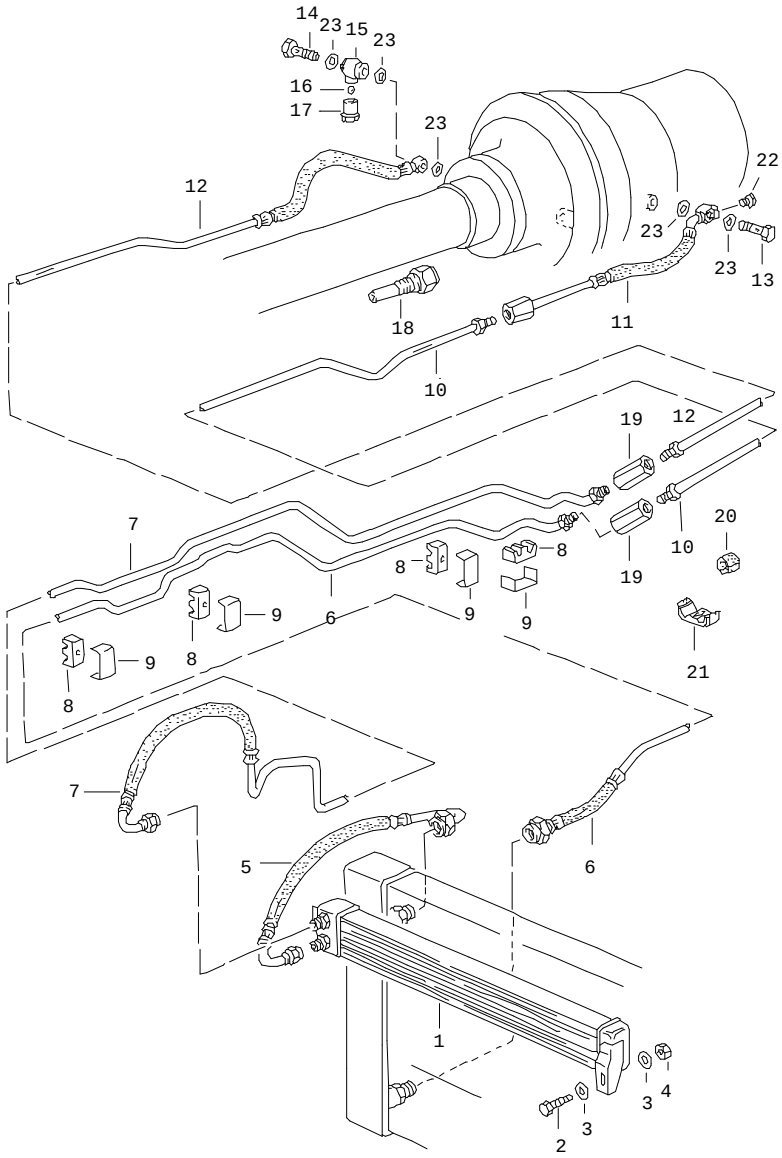

Pos	Part Number	Name	Remarks	Qty	Model
		automatic transmission atf cooler atf lines for cars with catalytic converter MOD.88-11/88 (MOD.89)			A28.12/14/16
1	928 307 027 06	transmission oil cooler		1	
2	900 075 057 02	hexagon-head bolt M 6 X 16		2	
3	N 011 524 7	washer A 6,4		4	
4	900 076 010 02	hexagon nut		2	
5	928 307 072 01	oil pipe		1	
6	960 307 076 00	oil pipe supply		1	
7	960 307 077 00	oil pipe return		1	
8	928 356 525 01	rubber mounting		5	
9	928 356 555 00	clamp		5	
10	960 307 078 00	oil pipe supply		1	
11	960 307 073 00	oil pipe supply		1	
12	960 307 079 00	oil pipe return		1	
13	999 134 030 02	banjo bolt M 14 X 1,5		1	
14	960 307 161 01	banjo bolt		1	
15	960 307 057 01	nipple		1	
16	N 025 657 1	ball		1	
17	960 307 163 00	screw plug		1	
18	928 606 152 00	temperature switch		1	
19	477 209 169	connecting piece		2	

Pos	Part Number	Name	Remarks	Qty	Model
20	960 307 213 00	protective tube		2	
21	960 307 211 00	support		4	
22	900 219 002 02	screw plug		1	
23	900 123 007 30	sealing ring A 14 X 18		X	
-	960 307 209 00	plate		X	
		- -- E N D -- -			

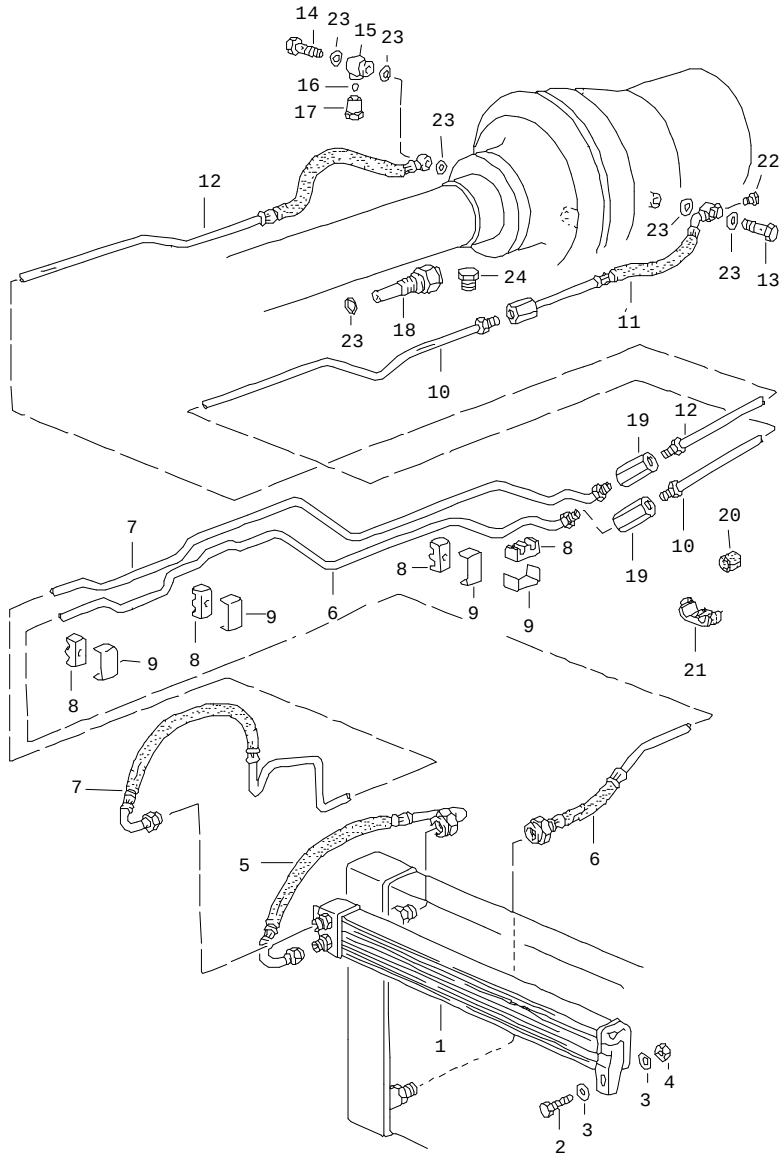

Pos	Part Number	Name	Remarks	Qty	Model
		automatic transmission atf cooler atf lines for cars with catalytic converter MOD.88-11/88 (MOD.89)			A28.16
1	928 307 027 06	transmission oil cooler		1	
2	900 075 057 02	hexagon-head bolt M 6 X 16		2	
3	N 011 524 7	washer A 6,4		4	
4	900 076 010 02	hexagon nut		2	
5	928 307 072 01	oil pipe		1	
6	928 307 071 02	oil pipe supply		1	
7	928 307 073 02	oil pipe return		1	
8	928 356 525 01	rubber mounting		5	
9	928 356 555 00	clamp		5	
10	928 307 080 01	oil pipe supply		1	
11	928 307 069 01	oil pipe supply		1	
12	928 307 074 01	oil pipe return		1	
13	999 134 030 02	banjo bolt M 14 X 1,5		1	
14	960 307 161 01	banjo bolt		1	
15	960 307 057 01	nipple		1	
16	N 025 657 1	ball		1	
17	960 307 163 00	screw plug		1	
18	928 606 152 00	temperature switch	-90	1	
18	928 606 152 00	temperature switch	91-	1	M 208

Pos	Part Number	Name	Remarks	Qty	Model	Pos	Part Number	Name	Remarks	Qty	Model
19	477 209 169	connecting piece		2							
20	960 307 213 00	protective tube		2							
21	960 307 211 00	support		4							
22	900 219 002 02	screw plug		1							
23	900 123 007 30	sealing ring A 14 X 18		X							
24	900 219 002 02	screw plug M 14 X 1,5	91-	1							
-	960 307 209 00	plate		X							
		- -- E N D -- -									

Model	Year	MG	SG	Illustration	Restrictions	Update				
928	91	3	07	307-90		179	15:41	02.09.2004	PORSCHE	PET	PORSCHE

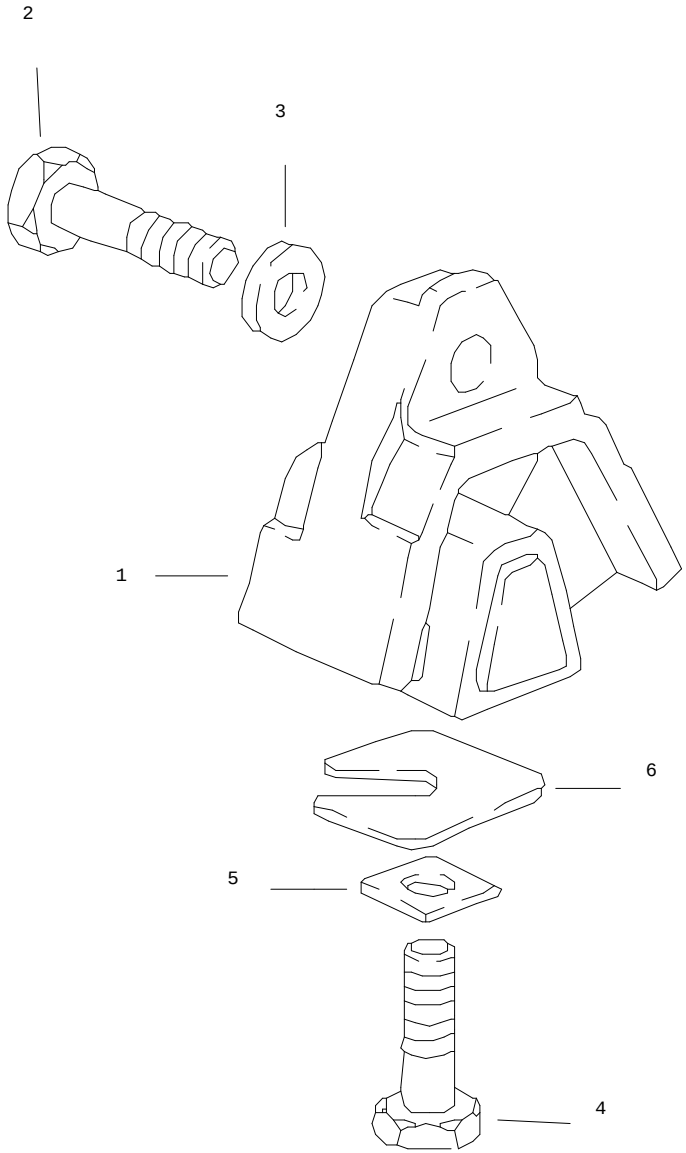

Pos	Part Number	Name	Remarks	Qty	Model
		automatic transmission transmission suspension			A28.12/14/16
1	928 375 045 16	transmission mounting		2	
2	N 010 142 2	hexagon-head bolt M 12 X 1,5 X 50		2	
3	W 901 333 143 01	washer		4	
3	999 025 091 02	washer		2	
4	N 040 108 1	hexagon-head bolt M 12 X 1,5 X 40		2	
5	928 375 331 00	square washer		2	
6	928 331 520 01	washer 1 MM		X	
6	928 331 520 02	washer 2 MM		X	
6	928 331 520 03	washer 3 MM		X	
6	928 331 520 04	washer 4 MM		X	
		- -- E N D -- -			

Model	Year	MG	SG	Illustration	Restrictions	Update		
928	91	3	98	REP		179	16:20	02.09.2004

Pos	Part Number	Name	Remarks	Qty	Model
		set of seals			
>>	> 928 300 901 01	set of seals manual transmission comprising:		1	G28.12/13/55
-	928 301 111 00	o-ring		1	
-	928 301 393 06	gasket		1	
-	928 301 393 07	gasket		1	
-	928 301 395 03	gasket		1	
-	928 302 167 03	shaft seal		1	
-	928 302 283 00	round seal		1	
-	928 302 283 01	round seal		1	
-	928 303 120 01	shaft seal		1	
-	928 332 215 02	shaft seal		2	
-	928 332 217 02	o-ring		2	
-	928 303 313 00	gasket		1	
-	999 701 904 40	o-ring		1	
>>	> 126 270 530 0	set of seals automatic transmission without differential comprising:		1	A28.12/14/16
-	018 997 044 7	sealing ring		1	
-	016 997 144 8	sealing ring		1	
-	126 272 005 5	sealing ring		2	
-	126 272 025 5	sealing ring		1	
-	126 272 039 2	boot		2	
-	126 272 019 2	boot		1	
-	126 272 009 2	boot		1	
-	126 272 095 5	sealing ring		2	
-	126 271 128 0	gasket		1	
-	006 997 014 7	sealing ring		1	
-	006 997 734 7	sealing ring		1	
-	006 997 754 8	sealing ring		1	
-	126 272 095 5	sealing ring		2	

Model	Year	MG	SG	Illustration	Restrictions	Update		
928	91	3	98	REP		179	16:20	02.09.2004

Pos	Part Number	Name	Remarks	Qty	Model
-	005 997 774 8	sealing ring		1	
-	005 997 814 8	sealing ring		1	
-	126 277 095 5	sealing ring		1	
-	126 277 075 5	sealing ring		1	
-	005 997 704 8	sealing ring		1	
-	005 997 804 8	sealing ring		1	
-	010 997 084 5	sealing ring		1	
-	005 997 864 8	sealing ring		1	
-	900 123 105 30	sealing ring		3	
-	126 277 085 5	sealing ring		1	
-	005 997 844 8	sealing ring		1	
-	005 997 854 8	sealing ring		1	
-	126 277 028 0	sealing ring		1	
-	922 321 301 07	sealing ring		1	
-	010 997 084 5	sealing ring		1	
-	722 271 038 0	gasket		1	
-	014 997 114 8	sealing ring		1	
-	008 997 314 8	sealing ring		1	
-	008 997 304 8	sealing ring		1	
-	001 997 354 8	sealing ring		1	
-	115 304 016 0	sealing ring		1	
-	016 997 394 8	sealing ring		1	
-	126 271 028 0	oil sump gasket		1	
-	005 997 784 8	sealing ring		1	
>>	> 960 302 901 00	set of seals differential comprising:		1	A28.12/14/16
-	999 701 743 40	o-ring		1	
-	928 301 395 03	gasket		1	
-	928 332 215 02	shaft seal		2	
-	928 332 217 02	o-ring		2	

Model	Year	MG	SG	Illustration	Restrictions	Update		
928	91	3	98	REP		179	16:20	02.09.2004

Pos	Part Number	Name	Remarks	Qty	Model
>>	> 960 307 901 01	oil filter set comprising:		1	A28.12/14/16
-	126 277 029 5	oil filter		1	
-	126 271 028 0	oil sump gasket		1	
-	N 013 806 2	sealing ring		1	
-	900 123 033 20	sealing ring		1	
-	928 116 911 01	repair kit for clutch comprising: pressure plate clutch plate clutch release bearing	87	1 1 1 1	
-	928 116 911 02	repair kit for clutch comprising: pressure plate clutch plate clutch release bearing	88-	1 1 1 1	
		- -- E N D -- -			

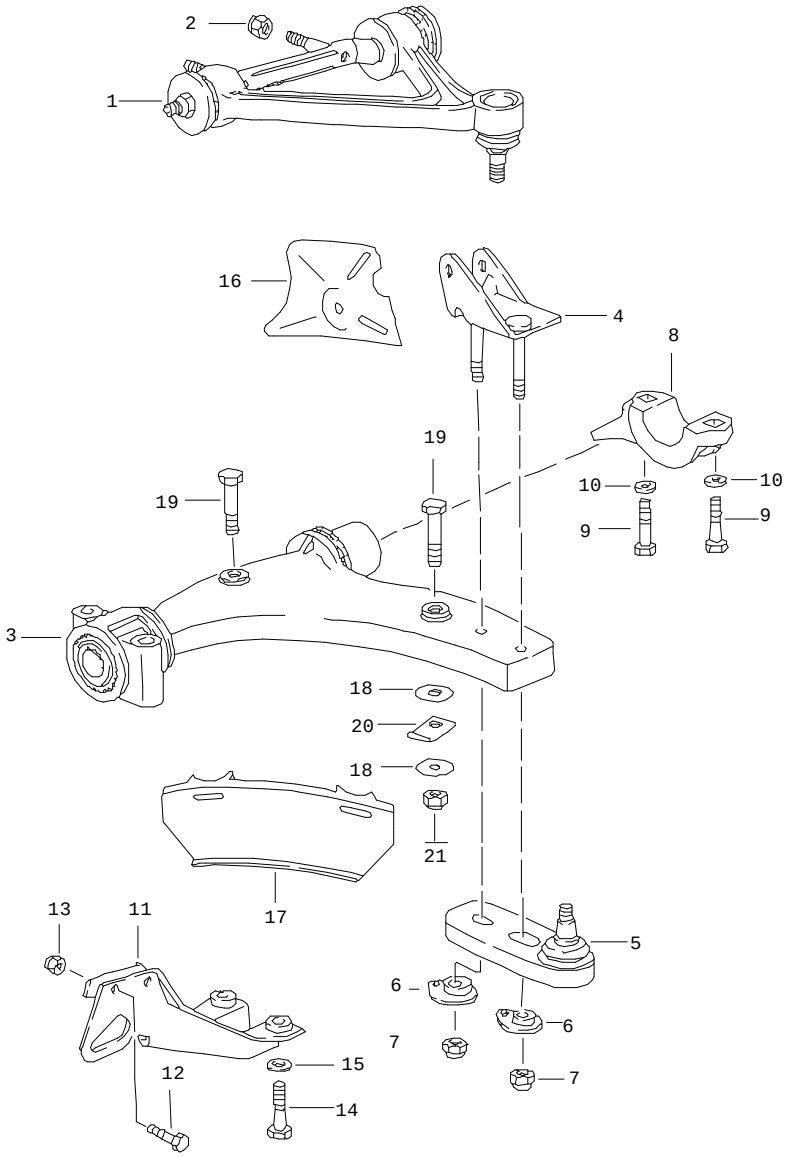

Pos	Part Number	Name	Remarks	Qty	Model
		control arm			
1	928 341 027 37	control arm upper	/L	1	
(1)	928 341 028 37	control arm upper	/R	1	
2	N 900 385 01	lock nut		4	
3	928 341 017 04	control arm lower		2	
4	928 341 091 06	clip	/L	1	
(4)	928 341 092 06	clip	/R	1	
5	928 341 049 08	articulated carrier		2	
6	928 341 466 01	eccentric		4	
7	900 910 115 02	lock nut		4	
8	928 341 167 00	supporting bow	-89	2	
8	928 341 167 00	supporting bow	90-	2	
9	900 082 048 08	hexagon-head bolt M 12 X 1,5 X 80		4	
10	928 341 165 00	washer		4	
11	928 341 064 02	protective bracket		2	
12	N 010 253 7	hexagon-head bolt M 10 X 22		4	
13	N 021 130 3	lock nut		4	
14	900 082 039 02	hexagon-head bolt M 12 X 1,5 X 100		4	
15	901 333 143 02	washer		4	
16	928 341 383 05	baffle plate	/L -88	1	
(16)	928 341 383 05	baffle plate	/L 89-	1	
(16)	928 341 384 05	baffle plate	/R -88	1	
(16)	928 341 384 05	baffle plate	/R 89-	1	
17	928 341 389 03	spoiler	/L	2	

Pos	Part Number	Name	Remarks	Qty	Model	Pos	Part Number	Name	Remarks	Qty	Model
(17)	928 341 390 03	spoiler	/R	1							
18	928 341 391 00	spacer		4							
19	N 010 367 4	hexagon-head bolt M 6 X 60		4							
20	928 341 395 01	fastening clip		4							
21	900 910 012 02	lock nut M 6		4							
		- -- E N D -- -									

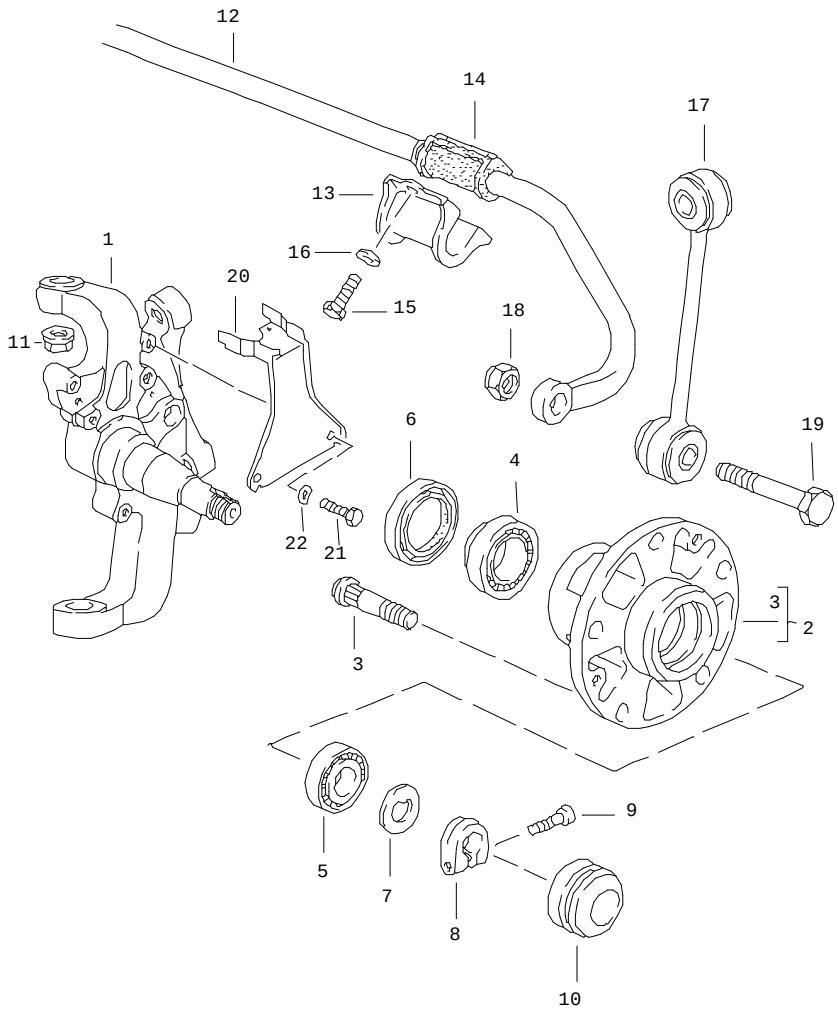

Pos	Part Number	Name	Remarks	Qty	Model
		steering knuckle			
1	928 341 057 16	steering knuckle	/L -88	1	
(1)	928 341 057 17	steering knuckle	/L 89-	1	
1	928 341 058 16	steering knuckle	/R -88	1	
(1)	928 341 058 17	steering knuckle	/R 89-	1	
2	928 341 066 04	front wheel hub	-88	2	
(2)	928 341 066 04	front wheel hub	89-	2	
3	928 341 671 02	wheel bolt		10	
(3)	928 341 671 02	wheel bolt oversize		X	
4	999 059 090 00	taper roller bearing		2	
5	999 059 089 01	taper roller bearing		2	
6	477 405 641	radial sealing ring		2	
7	911 341 663 00	thrust washer		2	
8	911 341 673 00	clamping nut		2	
9	999 119 001 01	pan-head screw M 7 X 18		2	
10	911 341 684 00	cap		2	
11	900 380 010 09	lock nut M 12 X 1,5		4	
12	928 343 073 06	stabiliser		1	
13	928 343 777 00	clamp		2	
14	928 343 793 04	stabiliser mounting		2	
15	900 075 043 02	hexagon-head bolt M 10 X 30	/RL	4	
(15)	N 010 275 3	hexagon-head bolt M 10 X 35	/LL	1	
(15)	900 075 043 02	hexagon-head bolt M 10 X 30	/LL	3	
16	900 027 016 02	lock ring B 10		4	

Pos	Part Number	Name	Remarks	Qty	Model
17	928 343 069 01	stabiliser mounting		2	
18	N 022 141 1	lock nut M 12 X 1,5		2	
19	N 010 154 3	hexagon-head bolt M 12 X 1,5 X 55		2	
20	928 341 085 01	support	89-	2	M 482
21	N 010 227 2	hexagon-head bolt M 6 X 18	89-	4	M 482
22	N 012 226 5	spring washer B 6	89-	4	M 482
		- -- E N D -- -			

Pos	Part Number	Name	Remarks	Qty	Model

Model	Year	MG	SG	Illustration	Restrictions	Update	15:42	02.09.2004	PORSCHE	PET	PORSCHE
928	91	4	02	402-00		179					

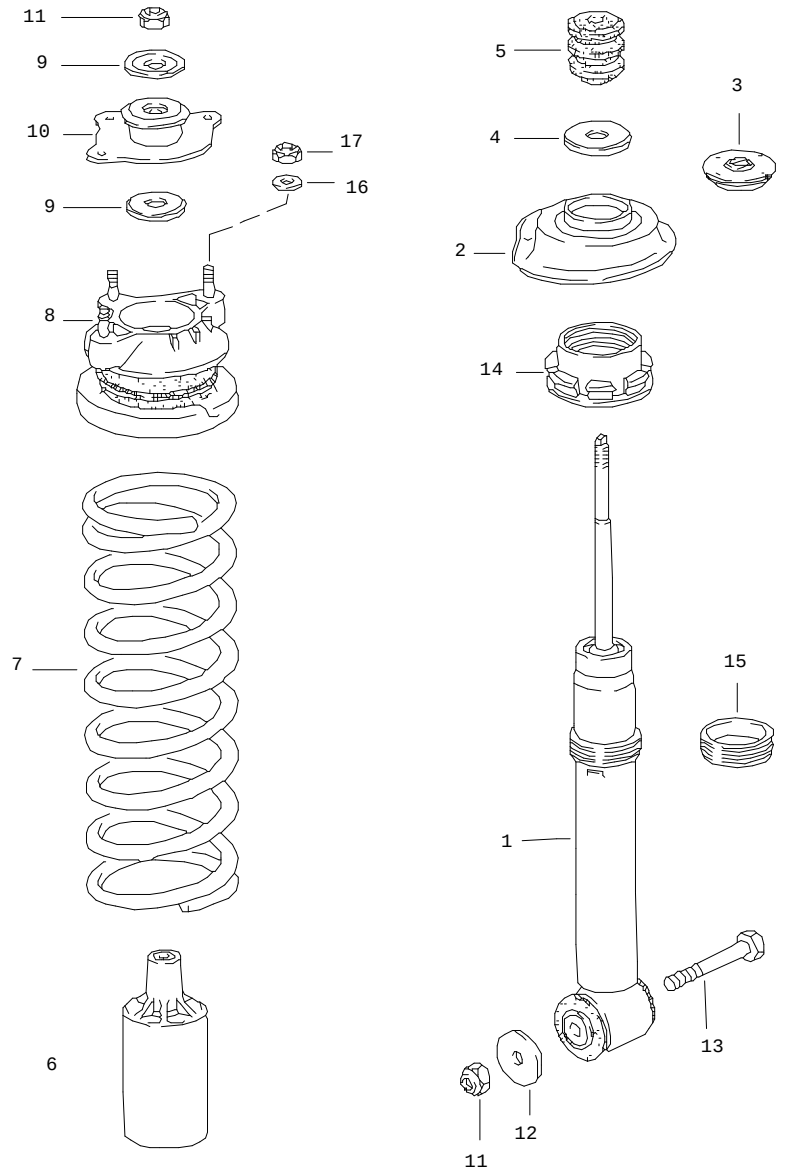

Pos	Part Number	Name	Remarks	Qty	Model
		springs			
1	928 343 055 07	vibration damper - boge -		2	
(1)	U 928 343 055 09	vibration damper - bilstein -		2	
(1)	928 343 055 09	vibration damper - boge -		2	M 474 M 637
2	928 343 525 03	concave washer		2	
3	928 333 551 00	supporting cover		2	
4	911 333 511 00	washer		2	
5	928 343 527 02	additional spring		2	
6	928 343 507 03	boot		2	
7	928 343 511 09	front wheel spring 1 set		1	
	404	marked brown			
7	928 343 511 12	front wheel spring 1 set		1	M 637
	504	marked orange			
8	A 928 343 047 07	concave washer	-88	2	
8	928 343 047 07	concave washer	89-	2	
9	928 343 523 00	washer		4	
10	928 343 051 01	mounting for absorber		2	
11	N 022 141 1	lock nut NM 12 X 1,5		4	
12	999 025 074 02	washer		2	
13	900 082 044 02	hexagon-head bolt M 12 X 1,5 X 125		2	
14	928 343 535 02	nut		2	
15	928 343 537 00	threaded ring		2	

Pos	Part Number	Name	Remarks	Qty	Model	Pos	Part Number	Name	Remarks	Qty	Model
16	900 025 008 09	washer A 10,5		6							
17	900 910 031 09	lock nut NM 10		6							
		- -- E N D -- -									

Model	Year	MG	SG	Illustration	Restrictions	Update	15:42	02.09.2004	PORSCHE	PET	PORSCHE
928	91	4	03	403-00		179					

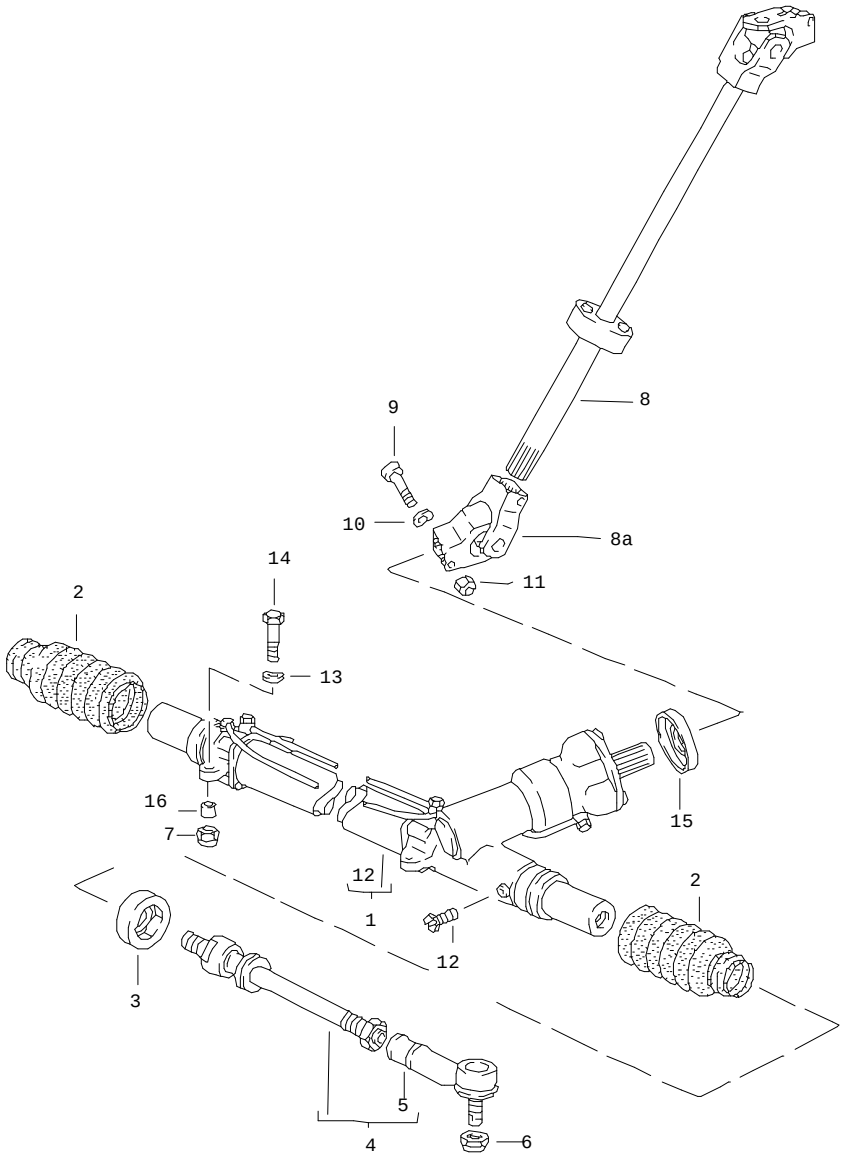

Pos	Part Number	Name	Remarks	Qty	Model
		steering gear tie rod			
1	> 928 347 010 24	steering gear	/LL -90	1	
1	A 928 347 010 27	steering gear	/LL 91-	1	
1	928 347 010 27	steering gear		1	
1	927 347 010 26	steering gear	/RL -90	1	
1	927 347 010 26	steering gear	/RL 91-	1	
(2)	928 347 191 03	bellows		2	
3	928 347 329 04	stop		2	
4	928 347 031 07	tie rod		2	
5	928 347 322 02	ball joint		2	
6	900 910 046 02	lock nut		2	
7	N 021 130 3	lock nut		4	
8	928 347 093 01	intermed. steering shaft	/LL	1	
(8)	927 347 093 01	intermed. steering shaft	/RL	1	
8A	928 347 021 04	universal joint		1	
9	N 010 359 4	hexagon-head bolt		3	
10	N 012 241 8	spring washer B 8		3	
11	900 910 022 02	lock nut		3	
12	999 063 002 40	screw plug AM 12 X 1,5		1	
13	900 028 005 02	spring washer A 10		4	
14	N 010 445 2	hexagon-head bolt M 10 X 45	/LL	4	
(14)	N 010 445 2	hexagon-head bolt M 10 X 45	/RL	3	
(14)	N 010 450 5	hexagon-head bolt M 10 X 50	/RL	1	
15	928 347 923 00	protection cap		1	

Pos	Part Number	Name	Remarks	Qty	Model	Pos	Part Number	Name	Remarks	Qty	Model
16	928 347 779 03	bush		4							
		- -- E N D -- -									

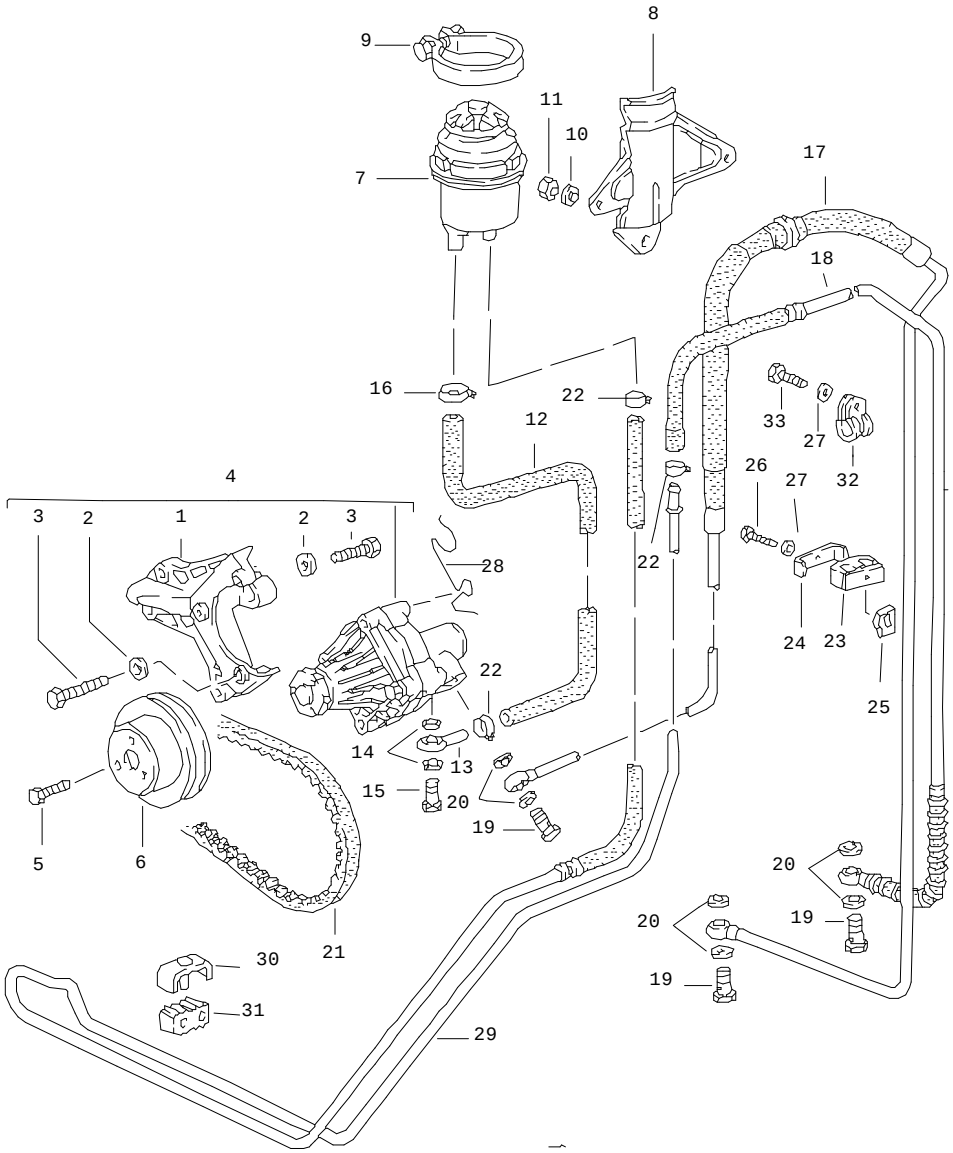

Pos	Part Number	Name	Remarks	Qty	Model
		power steering lines			
1	A 928 347 121 03	support	-90	1	
1	928 347 121 03	support		1	
(1)	928 347 121 02	support	91	1	
2	900 025 007 02	washer A 8,4		5	
3	N 010 353 3	hexagon-head bolt M 8 X 42		4	
4	> 928 347 089 01	vane type pump	-90	1	
4	> 928 347 089 01	vane type pump	91	1	
-	928 347 921 01	repair kit for 928.347.089.00	-90	1	
5	999 072 005 09	hexagon-head bolt M 6 X 12		3	
6	928 347 441 10	pulley		1	
7	928 347 015 03	oil tank		1	
-	928 347 925 00	cover for oil tank		1	
-	928 347 927 00	gasket for cover		1	
8	928 347 333 00	support		1	
-	928 501 817 02	retaining bracket for lines		1	
9	999 512 350 02	hose clamp SGL 80-100-9		1	
10	900 151 008 02	washer B 8,4		3	
11	900 084 004 02	hexagon nut NM 8		3	
12	928 347 445 05	hose		1	

Pos	Part Number	Name	Remarks	Qty	Model
13	999 230 158 02	nipple		1	
14	N 100 184 01	sealing ring A 16 X 20		2	
15	900 134 014 02	banjo bolt A 10		1	
16	999 512 346 00	hose clamp		1	
17	928 347 447 05	pressure line	/LL -90	1	
17	928 347 447 07	pressure line	/LL 91	1	
(17)	927 347 447 02	pressure line	/RL -90	1	
(17)	927 347 447 04	pressure line	/RL 91	1	
18	928 347 449 07	return line	/LL -90	1	
18	928 347 449 09	return line	/LL 91	1	
(18)	927 347 449 03	return line	/RL -90	1	
(18)	927 347 449 05	return line	/RL 91	1	
19	900 134 007 02	banjo bolt		2	
20	900 123 042 20	sealing ring 14 X 18		4	
21	999 192 286 50	v-belt 12,5 X 1000		1	
22	999 512 554 00	hose clamp A 8 X 9		3	
23	999 511 121 40	clip	-90	1	
(23)	928 347 560 00	clip	91	1	
24	928 347 455 00	shim	-90	1	
(24)	928 347 529 00	shim	91	1	
25	999 507 003 02	speed nut B 6,3		1	
26	900 187 032 02	tapping screw 6,3 X 32		1	
(26)	900 143 155 02	screw B 4,8 X 32 ZI		1	
27	N 011 524 7	washer A 6,4		2	
28	928 347 429 00	support		1	
(28)	928 347 429 01	support		1	
29	928 347 350 00	radiator coil		1	
30	928 347 555 00	clamp		2	
31	928 347 527 00	rubber mounting		2	
32	999 511 156 00	clamp		2	
(32)	N 020 601 1	clip		2	
33	N 010 210 7	hexagon-head bolt M 6 X 10		2	
		- -- E N D -- -			

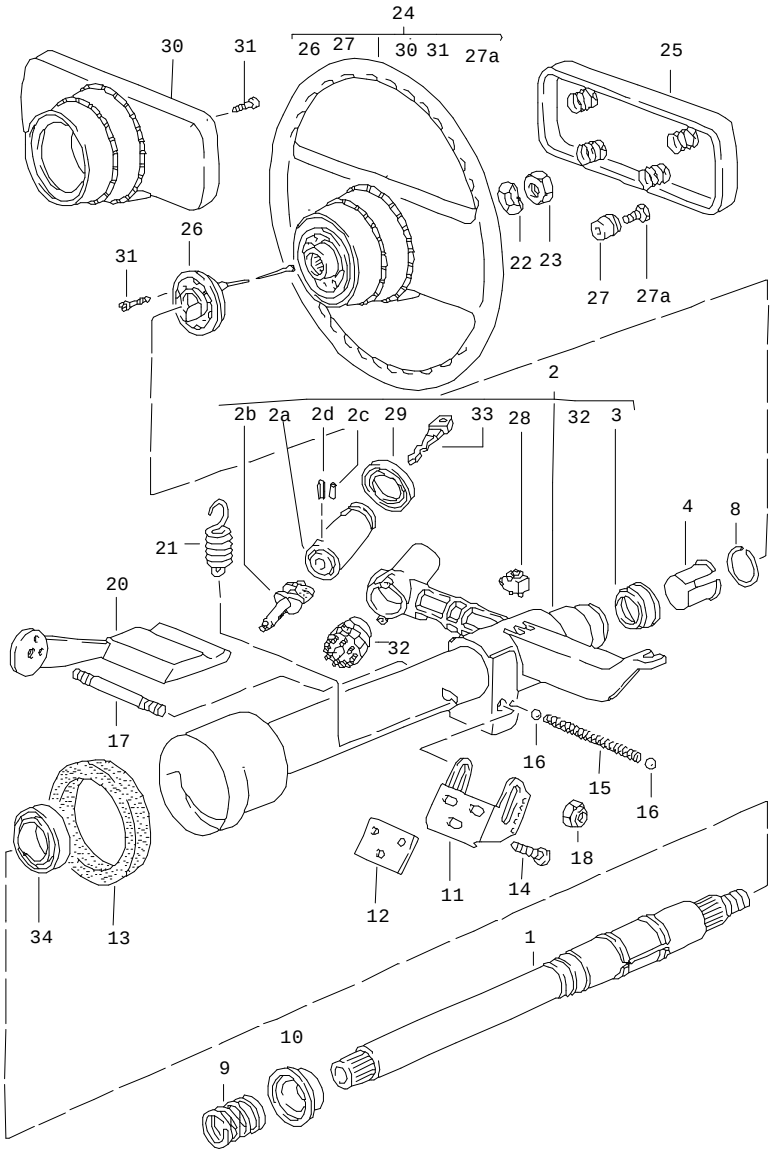

Pos	Part Number	Name	Remarks	Qty	Model
		steering parts steering wheel			
1	928 347 061 06	steering shaft		1	
2	928 347 903 02	steering lock with steering outer tube with 1 key w/o stipulated lock number	-89	1	
2	928 347 903 12	steering lock with steering outer tube with 1 key w/o stipulated lock number	90-	1	
(2)	928 347 903 03	steering lock with steering outer tube with 1 key state lock number	-89	1	
(2)	928 347 903 11	steering lock with steering outer tube with 1 key state lock number	90-	1	
2A	A 928 347 915 01	lock cylinder for steering lock with 1 key w/o stipulated lock number	-89	1	
2A	928 347 915 01	lock cylinder for steering lock with 1 key w/o stipulated lock number	90-	1	
2A	A 928 347 917 01	lock cylinder for steering lock with 1 key with stipulated lock-no.	-89	1	
2B	928 347 919 00	control cam		1	
2C	900 091 001 00	dowel pin 3 X 8		1	
2D	900 095 007 00	roll pin 3 X 12		1	

Pos	Part Number	Name	Remarks	Qty	Model
3	928 347 791 00	steering shaft bearing		1	
4	928 347 739 02	support ring		1	
8	113 415 531	snap ring		1	
9	928 347 213 07	compression spring		1	
-	N 100 545 01	shim 0,3 MM		X	
-	N 027 416 1	shim 0,5 MM		X	
-	N 100 511 01	shim 1,0 MM		X	
-	N 100 512 01	shim 1,5 MM		X	
10	928 347 241 01	steering shaft bearing	-88	1	
10	928 347 241 01	steering shaft bearing	89-	1	
11	928 347 369 04	bracket		1	
12	928 347 370 01	desk pad		X	
(12)	928 347 370 02	desk pad		X	
(12)	928 347 370 03	desk pad		X	
13	928 347 659 02	sealing ring		1	
14	N 014 782 1	pan-head screw M 6 X 25		3	
15	928 347 375 01	compression spring		1	
16	900 108 020 00	ball 6 MM		2	
17	928 347 259 02	threaded bolt		1	
18	900 910 022 02	lock nut		2	
20	928 347 033 02	control lever		1	
21	928 347 377 03	tension spring		1	
22	N 012 239 1	spring washer B 18		1	
23	900 078 007 02	hexagon nut M 18 X 1,5		1	
24	928 347 084 02	sports steering wheel	-90	1	
	1AJ	black			
	7LD	burgundy			
	5JX	greyish green	-88		
	3LZ	mahogany			
	2UT	caramel			
	6KT	venetian blue			
	2JZ	marine blue			
	7LZ	velvet red			
	8WH	slate grey			
(24)	928 347 084 05	sports steering wheel	91-	1	
	1AJ	black			
	7WH	classic grey			
	9WW	cobalt blue			
	4XW	magenta			
	M47	matador red			
	D17	carrara grey			
	J27	sherwood green			
	L07	scala red			
	A37	greenwich grey			
(24)	928 347 084 04	sports steering wheel	-90	1	M 018
	7YA	black			
	7LD	burgundy			
	5JX	greyish green	-88		
	2UT	caramel			
	6KT	venetian blue			

Pos	Part Number	Name	Remarks	Qty	Model
	2JZ	marine blue			
	7LZ	velvet red			
	8WH	slate grey			
(24)	928 347 084 06	sports steering wheel	91-	1	M 018
	1AJ	black			
	7WH	classic grey			
	9WW	cobalt blue			
	4XW	magenta			
	M47	matador red			
	D17	carrara grey			
	J27	sherwood green			
	L07	scala red			
	A37	greenwich grey			
25	911 347 859 01	pad for horn	87	1	
	1AJ	black			
	7LD	burgundy			
	5JX	greyish green			
	3LZ	mahogany			
	2UT	caramel			
	6KT	venetian blue			
	2JZ	marine blue			
25	911 347 859 07	pad for horn	88-90	1	
	1AJ	black			
	7LD	burgundy			
	5JX	greyish green	88		
	3LZ	mahogany			
	2UT	caramel			
	6KT	venetian blue			
	2JZ	marine blue			
	7LZ	velvet red			
	8WH	slate grey			
25	911 347 859 07	pad for horn	91-	1	
	1AJ	black			
	7WH	classic grey			
	9WW	cobalt blue			
	4XW	magenta			
	M47	matador red			
	D17	carrara grey			
	J27	sherwood green			
	L07	scala red			
	A37	greenwich grey			
26	928 347 099 00	slip ring		1	
27	321 419 779 A	insulating bush		4	
27A	900 075 230 10	hexagon-head bolt M 4 X 16		4	
28	911 613 125 00	buzzer contact		1	
29	928 347 913 00	rubber boot		1	
30	928 347 857 02	hub cover		1	
	1DB	black			
	7LD	burgundy			
	5JX	greyish green	-88		
	8MF	mahogany			
	5KF	marine blue			
30	928 347 857 02	hub cover	91-	1	
	1DB	black			

Pos	Part Number	Name	Remarks	Qty	Model
	5XL	classic grey			
	6ZH	cobalt blue			
	5XW	magenta			
31	113 415 869	oval-head screw M 3,5 X 10		6	
32	-	ignition starter switch see group engine electric. equipment			
33	-	key see group 8/04/05 8/04/20			
34	999 052 151 00	deep-groove ball bearing 19 X 32 X 7		1	
		- -- E N D -- -			

Model	Year	MG	SG	Illustration	Restrictions	Update	15:42	02.09.2004	PORSCHE	PET	PORSCHE
928	91	4	03	403-06		179					

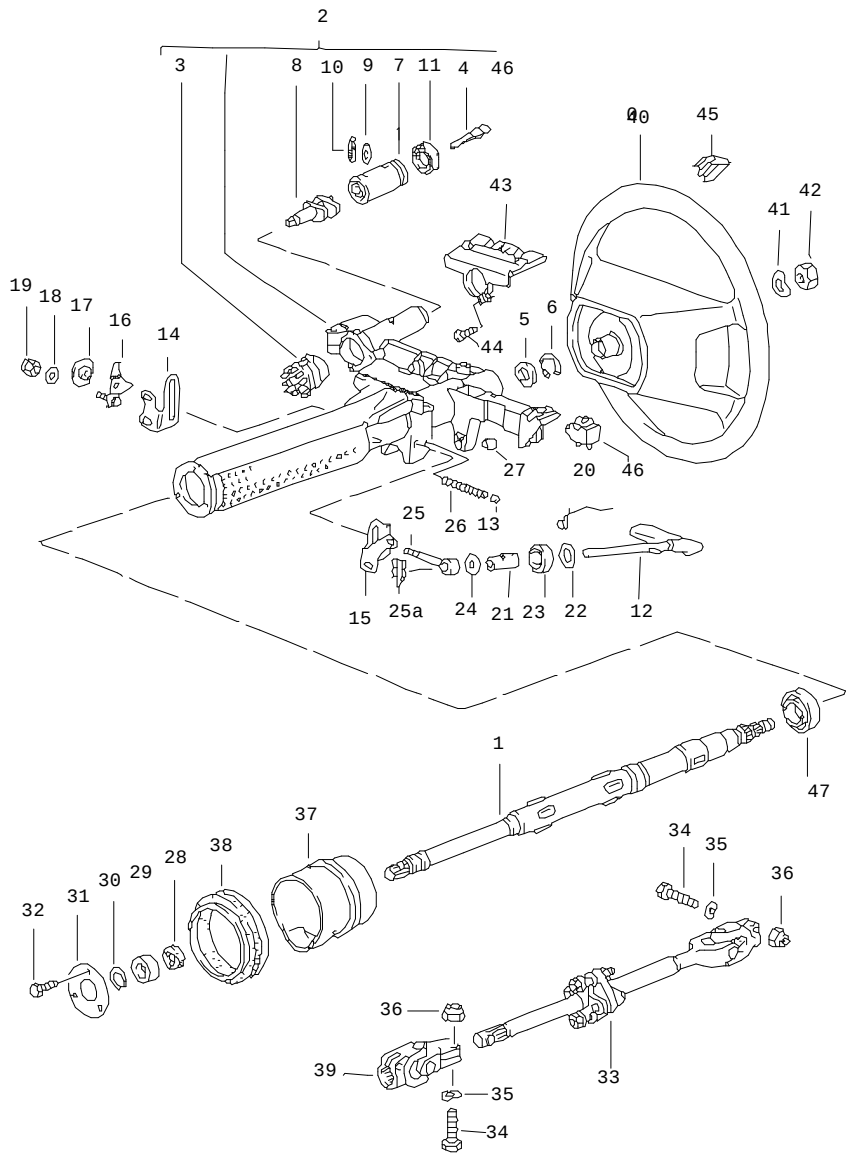

Pos	Part Number	Name	Remarks	Qty	Model
		airbag steering parts steering wheel	 91- 91-		
1	928 347 019 02	steering shaft		1	
2	928 347 903 14	steering lock with steering outer tube with 1 key w/o stipulated lock number		1	
(2)	928 347 903 13	steering lock with steering outer tube with 1 key state lock number		1	
3	-	see group 9/01/00			
4	-	see group 8/04/05			
5	999 234 004 00	shim		1	
6	999 042 017 01	snap ring		1	
7	928 347 915 01	lock cylinder for steering lock with 1 key w/o stipulated lock number		1	
7	928 347 917 01	lock cylinder for steering lock with 1 key with stipulated lock-no.		1	
8	928 347 919 00	control cam		1	
9	900 091 001 00	dowel pin 3 X 8		1	
10	900 095 007 00	roll pin 3 X 12		1	
11	928 347 913 00	rubber boot		1	
12	A 928 347 033 05	control lever		1	
	70B	black			

Pos	Part Number	Name	Remarks	Qty	Model
(12)	928 347 033 06	control lever		1	
	70A	black			
13	900 108 020 00	ball		1	
14	928 347 366 00	bracket	/R	1	
15	928 347 365 00	bracket	/L	1	
16	928 347 082 00	valve lever		1	
17	928 347 086 00	adjusting nut		1	
18	900 223 003 02	washer 6,4		1	
19	900 910 010 09	lock nut M 6		1	
20	928 347 376 01	spring		1	
21	A 928 347 341 00	eccentric		1	
(21)	928 347 341 01	eccentric		1	
22	999 025 208 40	washer 15,1 X 26 X 1,2		1	
23	999 201 340 00	needle-roller bearing 15 X 28 X 13		1	
24	N 012 230 1	washer B 10		X	
25	A 928 347 055 00	tensioning device		1	
25A	999 021 005 01	cotter pin		1	
26	928 347 375 01	compression spring		1	
27	999 924 002 40	plain bearing		1	
28	999 235 002 90	sealing ring 24 X 33 X 8		1	
29	999 052 155 00	deep-groove ball bearing 20 X 37 X 9		1	
30	999 041 021 01	circlip 20 X 1,2		1	
31	928 347 719 01	flange		1	
32	999 072 005 09	hexagon-head bolt M 6 X 12		3	
33	928 347 093 01	intermed. steering shaft		1	
34	N 010 359 4	hexagon-head bolt M 8 X 38		1	
35	N 012 241 8	spring washer B 8		1	
36	900 910 022 02	lock nut M 8		1	
37	928 347 709 11	funnel		1	
38	928 347 659 02	sealing ring		1	
39	928 347 021 04	universal joint		1	
40	944 347 804 51	sports steering wheel	91-	1	
	1AJ	black			
	7WH	classic grey			
	9WW	cobalt blue			
	4XW	magenta			
41	N 012 238 1	spring washer B 16		1	
42	900 078 006 01	hexagon nut M 16		1	
43	928 347 059 03	guide		1	
44	N 014 128 13	oval-head screw M 5 X 8		1	
45	944 347 836 00	horn button	/R 91-	1	
	01C	black			
	7WH	classic grey			
	9WW	cobalt blue			
	4XW	magenta			
(45)	944 347 835 00	horn button	/L 91-	1	
	01C	black			

Pos	Part Number	Name	Remarks	Qty	Model
	7WH	classic grey			
	9WW	cobalt blue			
	4XW	magenta			
-	944 612 355 00	wiper contact		1	
-	944 347 831 00	switch housing	/L 91-	1	
	01C	black			
	6ZF	cobalt blue			
	4XC	classic grey			
	6WX	magenta			
-	944 347 832 00	switch housing	/R 91-	1	
	01C	black			
	6ZF	cobalt blue			
	4XC	classic grey			
	6WX	magenta			
47	999 052 160 00	deep-groove ball bearing 30 X 42 X 7		1	
		- -- E N D -- -			

Pos	Part Number	Name	Remarks	Qty	Model

Model	Year	MG	SG	Illustration	Restrictions	Update				
928	91	4	03	403-07		179	15:43	02.09.2004	PORSCHE	PET	PORSCHE

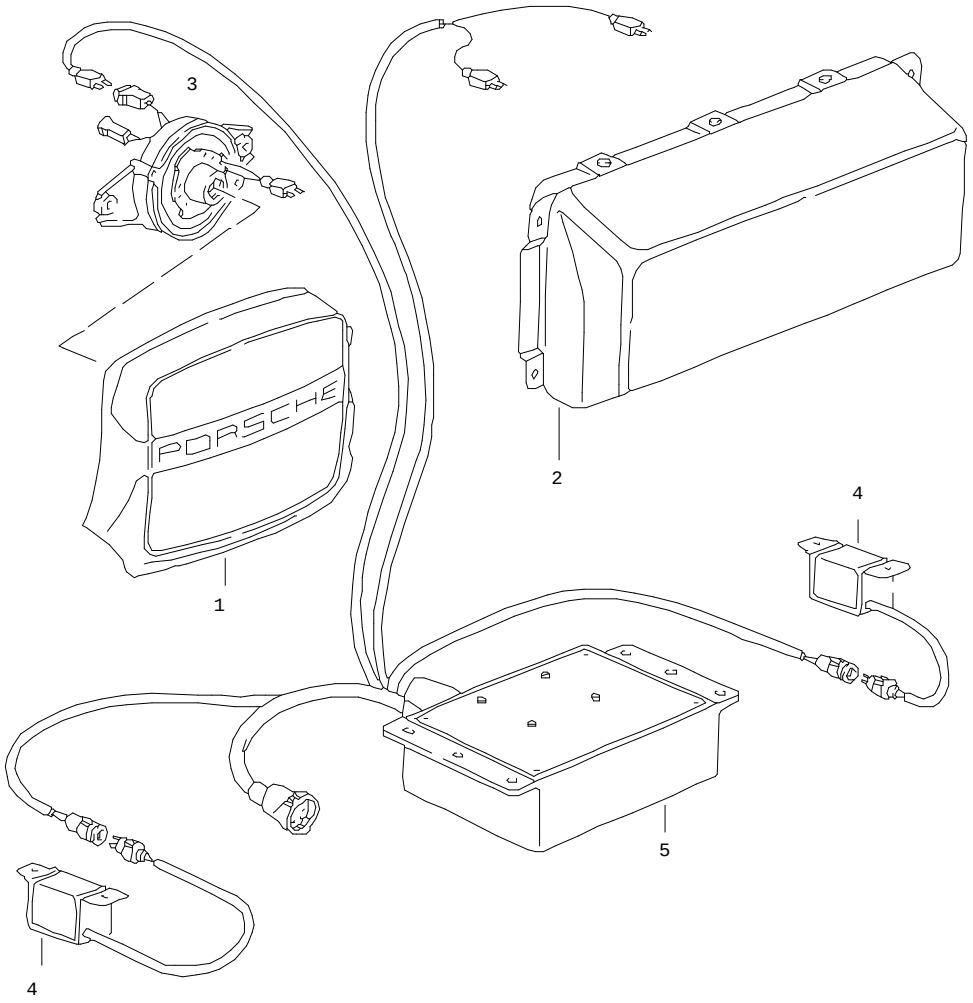

Pos	Part Number	Name	Remarks	Qty	Model
		airbag airbag unit switch unit	/LL 91-		
1	A 944 347 089 03	airbag unit driver's side		1	
	1AJ	black			
	3LZ	mahogany	90		
	2JZ	marine blue	90		
	7LD	burgundy	90		
(1)	944 347 989 06	airbag unit driver's side set		1	
	1AJ	black			
	7WH	classic grey	91-		
	9WW	cobalt blue	91-		
	4XW	magenta	91-		
2	928 803 071 01	airbag unit passenger's side		1	
3	928 652 211 01	support for contact		1	
4	928 613 220 02	front sensor		2	
5	928 618 217 00	switch unit		1	
-	928 618 401 00	shear bolt		2	
-	964 612 901 00	securing clip blue		1	
-	999 073 030 02	pan-head screw M 6 X 19		2	
-	N 013 968 7	tapping screw B 4,8 X 13		2	
-	944 618 401 00	nut M 6		4	
-	N 011 524 7	washer A 6,4		4	
		- -- E N D -- -			

Model	Year	MG	SG	Illustration	Restrictions	Update		
928	91	4	98	REP		179	16:20	02.09.2004

Pos	Part Number	Name	Remarks	Qty	Model
		repair kits			
>>	> 928 347 921 01	repair kit for vane type pump 928.347.089.00 comprising:		X	
		sealing ring front		1	
		sealing ring inner		1	
		ring inner		1	
		o-ring inner		1	
		- -- E N D -- -			

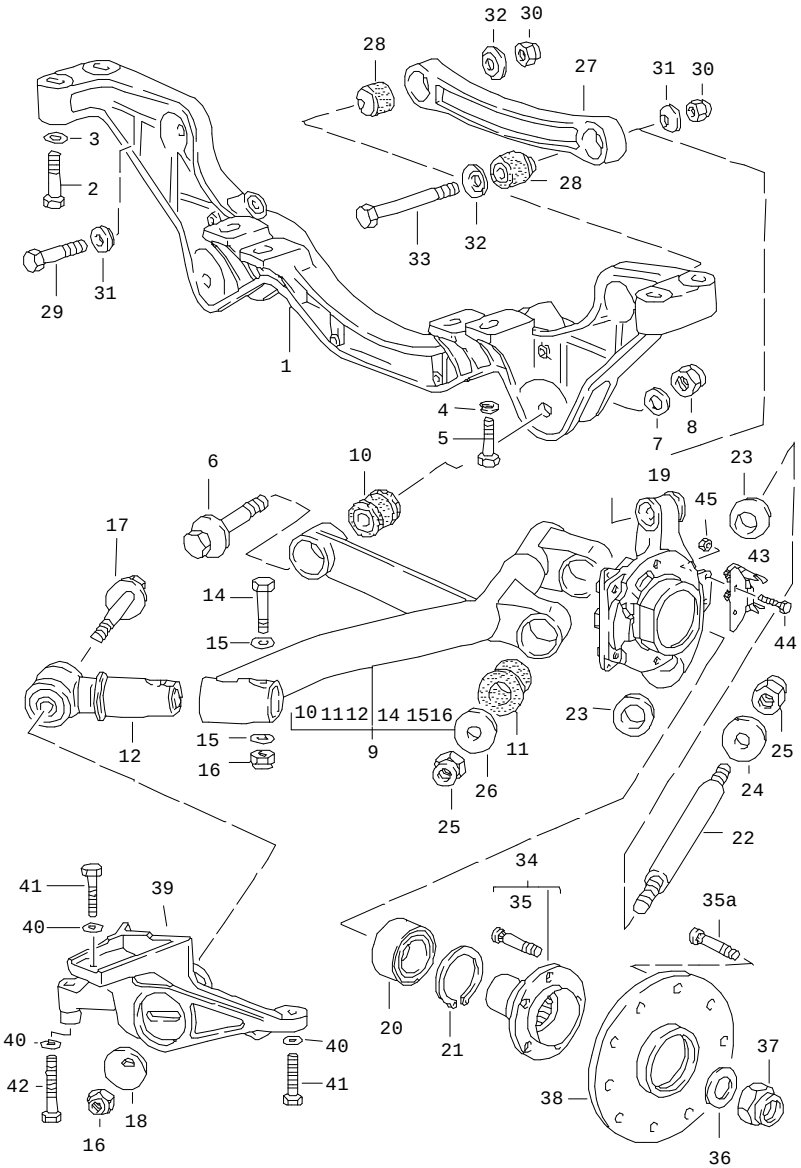

Pos	Part Number	Name	Remarks	Qty	Model
		rear axle			
1	928 331 131 17	rear axle cross support		1	M 249
(1)	928 331 131 18	rear axle cross support		1	M 481
2	N 010 473 6	hexagon-head bolt M 10 X 75		4	
3	900 223 011 02	washer B 10,5		4	
4	999 025 086 02	square washer 12,1 X 24		2	
4A	999 025 085 02	washer 12,5 X 30 X 1		X	
5	N 010 141 4	hexagon-head bolt M 12 X 1,5 X 45		2	
6	928 331 075 04	eccentric screw		2	
7	928 331 581 00	washer		2	
8	900 910 094 02	lock nut		2	
9	928 331 043 06	control arm	/L	1	
(9)	928 331 044 06	control arm	/R	1	
10	928 331 588 10	rubber mounting		2	
11	928 331 588 13	rubber mounting		4	
12	928 331 085 00	rocker bar		2	
14	N 010 183 3	hexagon-head bolt M 12 X 1,5 X 75		2	
15	900 028 014 02	spring washer		4	
16	N 022 141 4	lock nut		4	
17	928 331 659 05	eccentric screw		2	
18	928 331 523 12	eccentric washer		2	
(19)	928 331 219 09	wheel carrier	/L -88	1	
(19)	928 331 219 09	bracket	/L 89-	1	M 482
19	928 331 220 09	wheel carrier	/R -88	1	

Pos	Part Number	Name	Remarks	Qty	Model
(19)	928 331 220 09	bracket	/R 89-	1	M 482
20	A 928 331 583 00	angular-contact bearing		2	
(20)	999 053 050 00	angular-contact bearing		2	
21	900 042 030 02	circlip		2	
22	928 331 641 01	pin		2	
23	928 331 655 06	cone washer		4	
24	928 331 647 02	washer		2	
25	900 910 094 02	lock nut		4	
26	928 331 647 00	washer		4	
27	928 331 101 02	control arm		2	
28	928 331 089 02	link bearing		4	
29	N 010 470 7	hexagon-head bolt M 10 X 70		2	
30	900 910 031 09	lock nut		4	
31	928 331 575 01	cone washer		4	
32	928 331 649 02	cone washer		2	
33	N 010 482 3	hexagon-head bolt M 10 X 105		2	
34	928 331 065 07	wheel hub		2	
35	928 341 671 02	wheel bolt		10	
(35)	928 341 671 02	wheel bolt oversize		10	
35A	904 341 671 00	wheel bolt		10	M 393
36	928 331 591 02	washer		2	
37	900 910 093 02	lock nut		2	
38	951 331 611 02	spacer ring 17 MM		2	M 393
39	928 331 111 00	link bearing	/L	1	
(39)	928 331 112 00	link bearing	/R	1	
40	900 223 011 02	washer		10	
41	N 010 450 5	hexagon-head bolt M 10 X 50		4	
42	N 010 473 6	hexagon-head bolt M 10 X 75		6	
43	928 331 081 01	support	89-	2	M 482
44	900 075 014 02	hexagon-head bolt M 6 X 18	89-	4	M 482
45	900 910 012 02	lock nut M 6	89-	4	M 482

- -- E N D -- -

Model	Year	MG	SG	Illustration	Restrictions	Update	15:44	02.09.2004	PORSCHE	PET	PORSCHE
928	91	5	02	502-00		179					

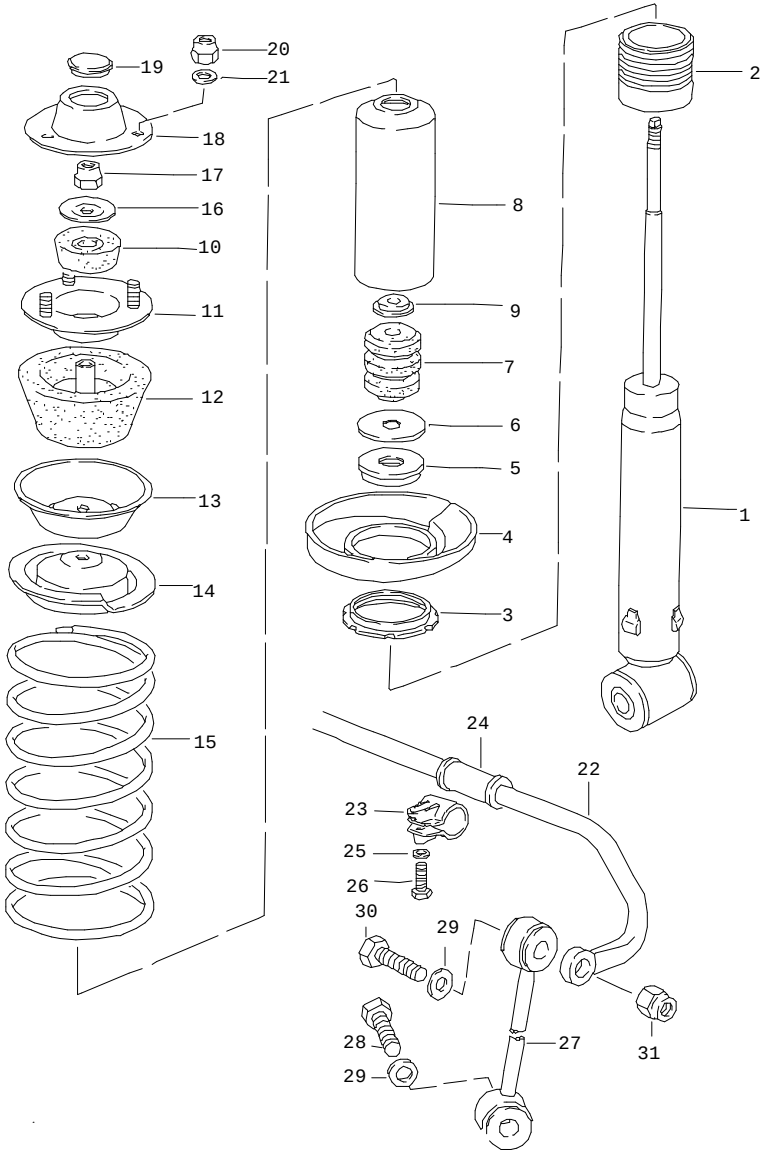

Pos	Part Number	Name	Remarks	Qty	Model
		springs stabiliser			
1	928 333 051 16	vibration damper - boge -		2	
(1)	928 333 051 17	vibration damper - boge -	-89	2	M 474 M 637
2	928 333 511 05	threaded sleeve		2	
3	928 333 513 02	adjusting nut		2	
4	928 333 521 07	concave washer		2	
5	928 333 551 00	supporting cover		2	
6	911 333 511 00	washer		2	
7	928 333 518 10	additional spring		2	
8	928 333 502 01	protective tube		2	
9	928 333 517 01	retaining ring		2	
10	928 333 465 01	damping rubber		2	
11	928 333 064 00	fastening plate		2	
12	928 333 043 00	supporting rubber		2	
13	928 333 436 02	supporting plate		2	
14	928 333 522 08	concave washer		2	
15	928 333 531 14	rear wheel spring marked blue		2	
	301	1 colour line			
	302	2 colour lines			
	303	3 colour lines			
16	928 333 525 01	washer		2	
17	900 910 046 02	lock nut		2	
18	928 333 151 01	cover		2	
19	999 703 131 40	cover		2	
20	900 910 031 09	lock nut		6	

Pos	Part Number	Name	Remarks	Qty	Model
21	900 025 008 09	washer A 10,5		6	
22	928 333 701 34	stabiliser 22 MM $		1	
23	928 333 085 00	clip		2	
24	928 333 754 26	bearing 22 MM $		2	
25	477 407 425	washer		2	
26	N 010 472 4	hexagon-head bolt M 10 X 85		2	
27	928 333 059 01	stabiliser mounting	/L	1	
27	928 333 060 01	stabiliser mounting	/R	1	
28	N 010 445 2	hexagon-head bolt M 10 X 45		2	
29	928 333 761 00	washer		4	
30	900 074 063 02	hexagon-head bolt M 10 X 55		2	
31	900 910 031 09	lock nut		2	
		- -- E N D -- -			

Pos	Part Number	Name	Remarks	Qty	Model

Model	Year	MG	SG	Illustration	Restrictions	Update			
928	91	5	02	502-05		179	15:44	02.09.2004	PORSCHE PET PORSCHE

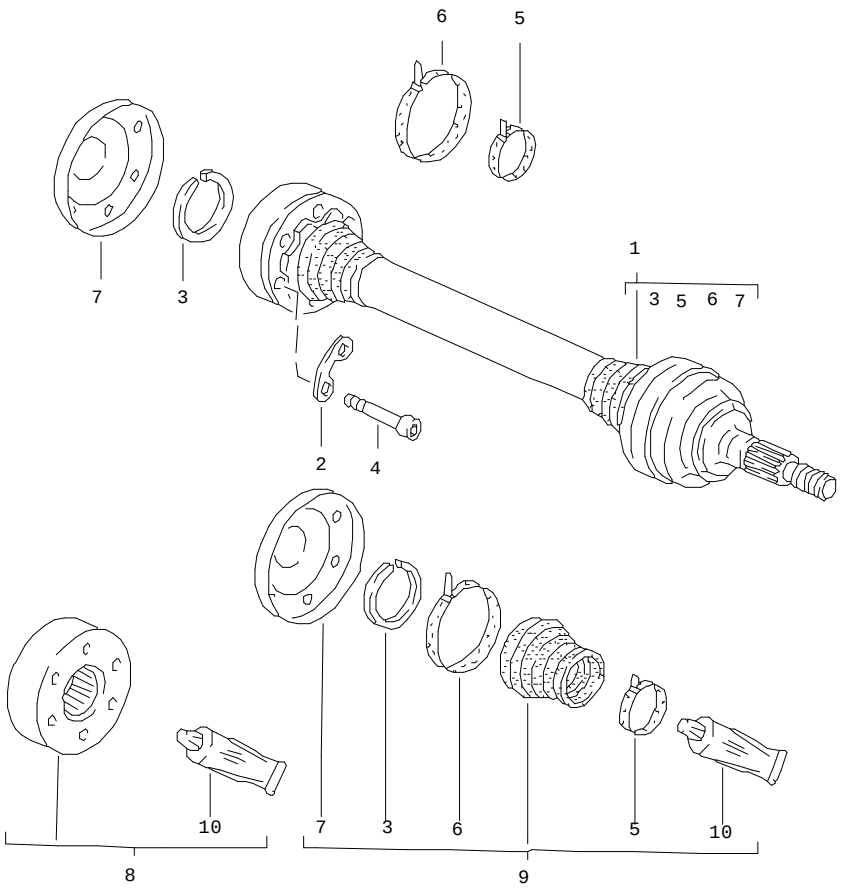

Pos	Part Number	Name	Remarks	Qty	Model
		drive shaft			
1	928 332 033 44	drive shaft	-90	2	
1	928 332 033 44	drive shaft	91-	2	
2	911 332 191 00	plate		6	
3	999 152 084 01	circlip		2	
4	900 067 123 01	pan-head screw M 10 X 50		12	
5	928 332 257 01	clip		4	
6	911 332 257 00	clip		4	
7	928 332 267 01	cover		2	
8	928 332 923 01	repair kit		X	
9	928 332 924 02	repair kit		X	
10	000 043 005 00	grease for drive shaft optimoly 1 90-g tube		X	
		- -- E N D -- -			

Model	Year	MG	SG	Illustration	Restrictions	Update		
928	91	5	98	REP		179	16:20	02.09.2004

Pos	Part Number	Name	Remarks	Qty	Model
		repair kit			
>>	> 928 332 924 02	repair kit for drive shaft 928.332.033.43/44 comprising:		X	
		dust bellows		1	
		grease for drive shaft		1	
		clip		2	
		snap ring		1	
		cover		1	
>>	> 928 332 923 01	repair kit for drive shaft 928.332.033.43/44 comprising:		X	
		joint		1	
		grease for drive shaft		1	
		- -- E N D -- -			

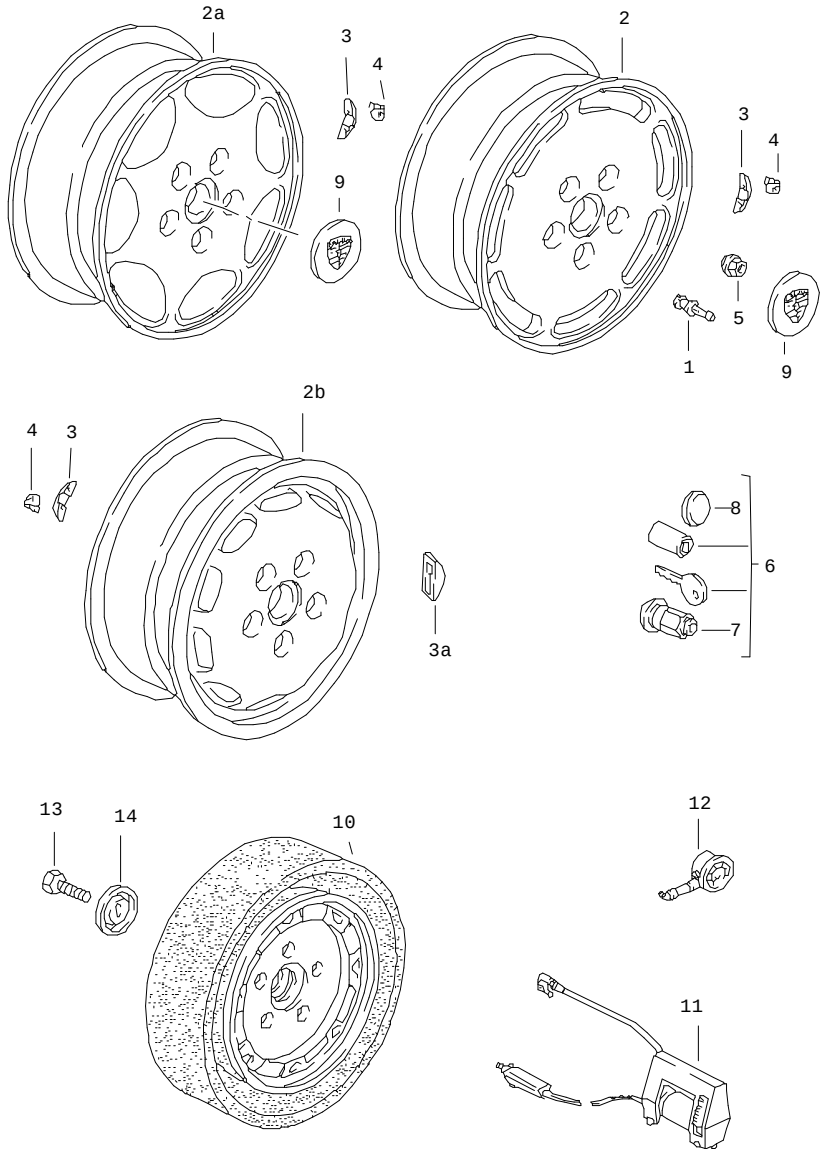

Pos	Part Number	Name	Remarks	Qty	Model
		wheels			
1	900 265 001 50	rubber valve		4	
2	928 362 115 01	alloy wheel 7 J X 16 ET 65 forged light platinum	-88	2	
2	928 362 155 01	alloy wheel 7 J X 16 ET 65 forged light platinum	89-	2	M 482 M 347
(2)	928 362 117 01	alloy wheel 8 J X 16 ET 52,3 forged light platinum	-88	2	
(2)	928 362 157 01	alloy wheel 8 J X 16 ET 52,3 forged light platinum	89-	2	M 482 M 347
(2)	928 362 115 00	alloy wheel 7 J X 16 ET 65 forged silver	-88	2	
(2)	928 362 155 00	alloy wheel 7 J X 16 ET 65 forged silver	89-	2	M 482
2A	928 362 154 05	alloy wheel 7,5 X 16 ET 65 cast	(GT) 90- (S4) 90-	2	M 482 M 400
(2)	928 362 117 00	alloy wheel 8 J X 16 ET 52,3 forged silver	-88	2	
(2)	928 362 157 00	alloy wheel 8 J X 16 ET 52,3 forged silver	89-	2	M 482
2A	928 362 158 02	alloy wheel 9 J X 16 ET 52,3 cast	(GT) 90- (S4) 90-	2	M 482 M 400

Pos	Part Number	Name	Remarks	Qty	Model
2A	928 362 117 30	alloy wheel 8 J X 16 ET 60 forged silver	-88	2	M 393 M 637
2A	928 362 119 30	alloy wheel 9 J X 16 ET 60 forged silver	-88	2	M 393 M 637
2A	928 362 157 30	alloy wheel 8 J X 16 ET 60 forged silver	89 89	2	M 482 M 393 M 637 M 639
2A	928 362 159 30	alloy wheel 9 J X 16 ET 60 forged silver	89 89	2	M 482 M 393 M 637 M 639
2B	928 362 114 20	alloy wheel 7 J X 16 ET 65 for winter use	-88	4	
(2B)	928 362 154 20	alloy wheel 7 J X 16 ET 65 for winter use	89-	2	M 482
(2B)	928 362 156 20	alloy wheel 8 J X 16 ET 52,3 for winter use	89-	2	M 482
3	928 361 421 00	balance weight 5 G		X	
3	928 361 410 00	balance weight 10 G		X	
3	928 361 422 00	balance weight 15 G		X	
3	928 361 411 00	balance weight 20 G		X	
3	928 361 423 00	balance weight 25 G		X	
3	928 361 412 00	balance weight 30 G		X	
3	928 361 424 00	balance weight 35 G		X	
3	928 361 413 00	balance weight 40 G		X	
3	928 361 425 00	balance weight 45 G		X	
3	928 361 414 00	balance weight 50 G		X	
3	928 361 426 00	balance weight 55 G		X	
3	928 361 415 00	balance weight 60 G		X	
3	928 361 416 00	balance weight 70 G		X	
3	928 361 417 00	balance weight 80 G		X	
3A	901 361 410 50	balance stick-on weight 5 G		X	
3A	901 361 410 00	balance stick-on weight 10 G		X	
3A	901 361 411 50	balance stick-on weight 15 G		X	
3A	901 361 411 00	balance stick-on weight 20 G		X	
3A	901 361 412 50	balance stick-on weight 25 G		X	
3A	901 361 412 00	balance stick-on weight 30 G		X	
3A	901 361 413 50	balance stick-on weight 35 G		X	
3A	901 361 413 00	balance stick-on weight 40 G		X	
3A	901 361 414 50	balance stick-on weight 45 G		X	
3A	901 361 414 00	balance stick-on weight 50 G		X	
3A	901 361 415 50	balance stick-on weight 55 G		X	

Pos	Part Number	Name	Remarks	Qty	Model
3A	901 361 415 00	balance stick-on weight 60 G		X	
3A	901 361 416 50	balance stick-on weight 65 G		X	
3A	901 361 416 00	balance stick-on weight 70 G		X	
3A	901 361 417 50	balance stick-on weight 75 G		X	
3A	901 361 417 00	balance stick-on weight 80 G		X	
4	A 928 361 420 01	retaining clip for balance weight		X	
4	928 361 420 01	retaining clip for balance weight		X	
5	999 182 003 36	wheel nut		X	
6	928 361 047 03	wheel nut lockable 1 set comprising: wheel nut		X 4	
7	928 361 306 03	wheel nut		X	
8	965 361 167 00	cap		X	
9	477 601 051 D	hub cap for alloy wheel 928.362.115.01		4	
(9)	928 361 031 00	hub cap for alloy wheel 928.362.115.00		4	
(9)	928 361 032 01	hub cap for alloy wheel 928.362.114.20		4	
(9)	928 361 032 02	hub cap for alloy wheel 928.362.158.02	90-	4	

Pos	Part Number	Name	Remarks	Qty	Model
10	928 362 030 02	emergency wheel 5 1/2 J X 15 with collapsible tire		1	
(10)	928 362 030 02	emergency wheel 5 1/2 J X 15 with collapsible tire		1	(GB)
(10)	928 362 030 02	emergency wheel 5 1/2 J X 15 with collapsible tire		1	
-	996 361 521 00	boot for impeller		1	
11	911 361 510 02	small electric compressor	87	1	
(11)	911 652 052 00	small electric compressor	88-	1	
12	911 722 201 02	tyre pressure gauge		1	
-	999 914 001 40	plastic gloves		1	
-	A 911 361 522 00	protective film		1	
13	N 040 281 1	hexagon-head bolt M 10 X 45		1	
14	477 813 157	fastening plate		1	
		- -- E N D -- -			

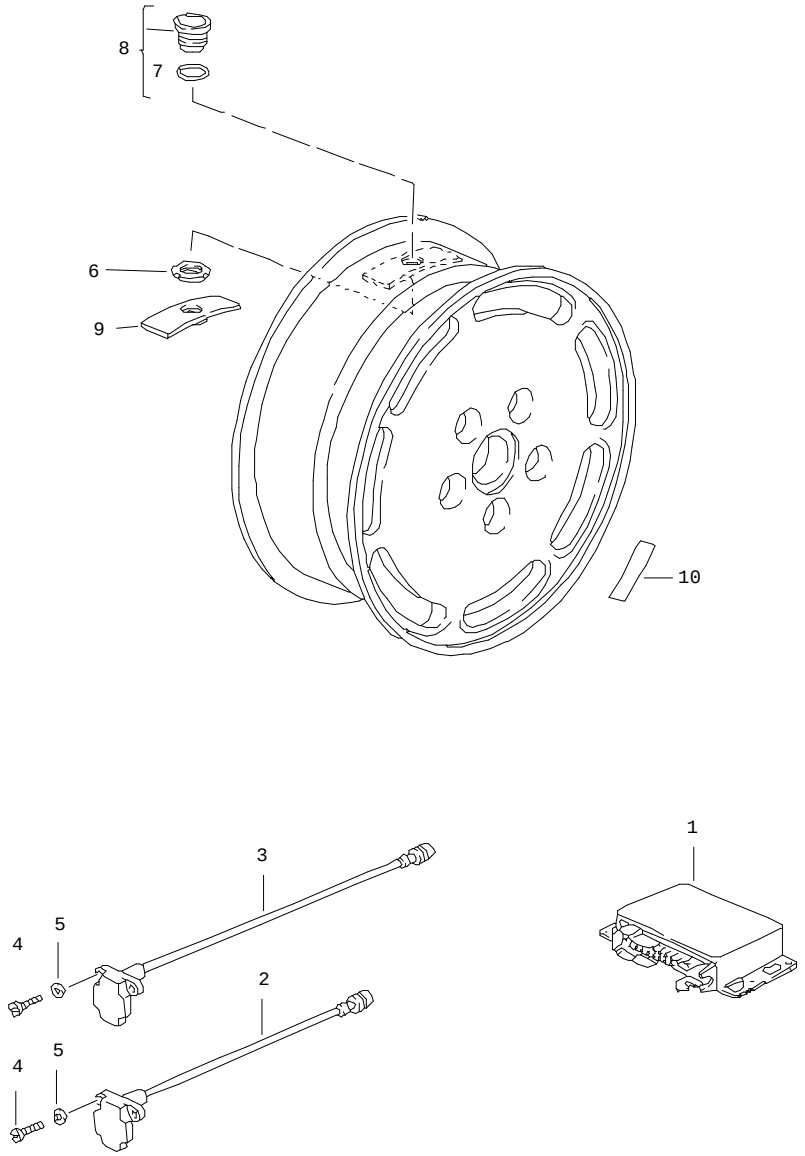

Pos	Part Number	Name	Remarks	Qty	Model
		tyre pressure monit. sys.	89-		M 482
1	928 618 150 01	control unit	-90	1	
1	928 618 150 01	control unit	91-	1	
2	928 606 413 00	pressure transmitter	/V	2	
3	928 606 414 00	pressure transmitter	/H	2	
4	N 044 734 1	pan-head screw M 5 X 16		8	
5	N 012 225 3	spring washer B 5		8	
6	928 361 203 01	nut		8	
7	999 707 035 40	o-ring 30 X 1,5		8	
8	928 361 022 00	pressure switch	/V	4	
8	928 361 023 00	pressure switch	/H	4	
9	A 928 361 201 02	protection cap		8	
(9)	928 361 201 02	protection cap		8	
10	928 701 287 10	indication sticker for tyre assembly		X	
		- -- E N D -- -			

Model	Year	MG	SG	Illustration	Restrictions	Update	15:44	02.09.2004	PORSCHE	PET	PORSCHE
928	91	6	02	602-00		179					

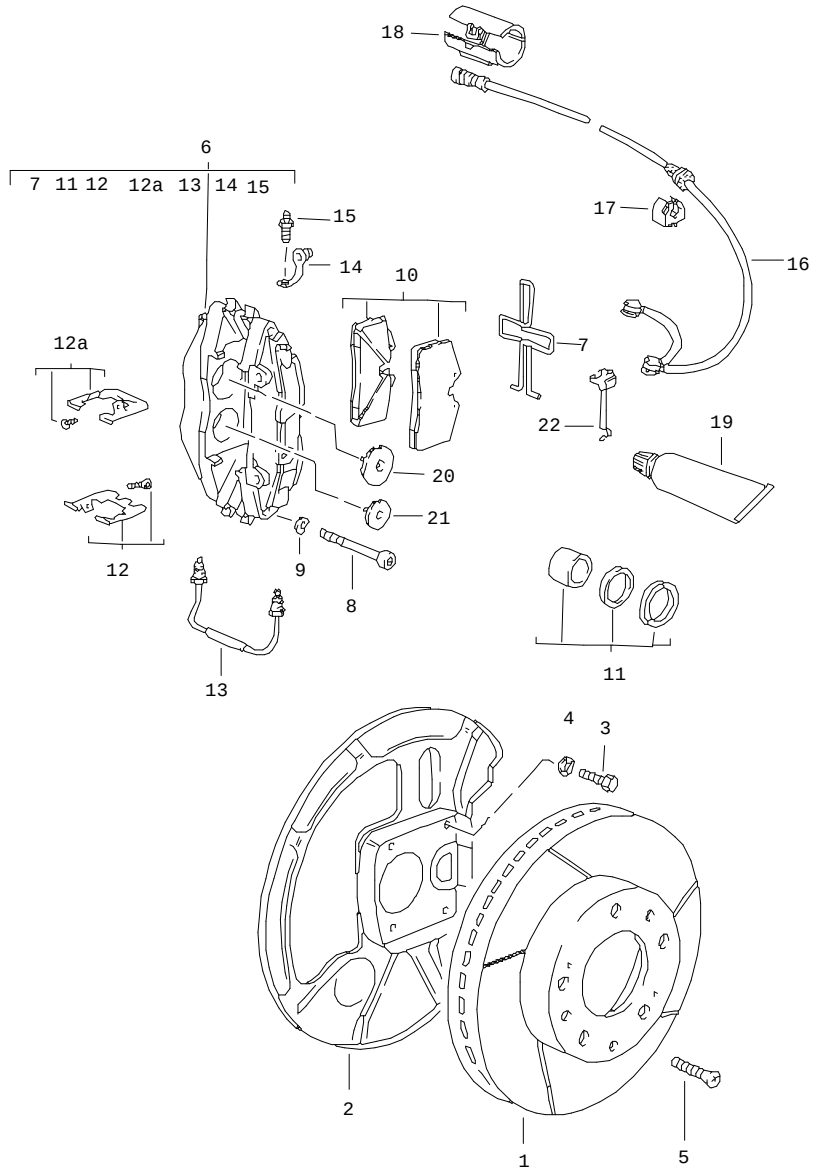

Pos	Part Number	Name	Remarks	Qty	Model
		disc brake front see technical information GR.4 NR. 1/89			
1	928 351 043 60	brake disc	/L	1	
(1)	928 351 044 60	brake disc	/R	1	
2	928 351 083 03	protective plate	/L -88	1	
2	928 351 083 03	protective plate	/L 89-	1	
(2)	928 351 084 03	protective plate	/R -88	1	
(2)	928 351 084 03	protective plate	/R 89-	1	
3	N 010 227 2	hexagon-head bolt M 7 X 12		8	
4	900 028 019 08	spring washer B 7		8	
5	N 033 167 1	countersunk-head screw M 6 X 12		4	
6	A 928 351 421 00	fixed calliper without pad $ 36/42 MM	/L 87	1	
(6)	928 351 421 01	fixed calliper without pad $ 36/44 MM	/L -88	1	
(6)	928 351 421 03	fixed calliper without pad $ 36/44 MM	/L 89-	1	
(6)	928 351 421 03	fixed calliper without pad $ 36/44 MM	/L 91-	1	
(6)	A 928 351 422 00	fixed calliper without pad $ 36/42 MM	/R 87	1	
(6)	928 351 422 01	fixed calliper without pad $ 36/44 MM	/R -88	1	
(6)	928 351 422 03	fixed calliper without pad $ 36/44 MM	/R 89-	1	

Pos	Part Number	Name	Remarks	Qty	Model
(6)	928 351 422 03	fixed calliper without pad $ 36/44 MM	/R 91-	1	
7	928 351 950 01	expanding spring		2	
8	900 067 154 02	pan-head screw M 12 X 1,5 X 70		4	
9	N 011 564 2	washer		4	
10	A 928 351 939 01	repair kit use also: mounting parts		1	
(10)	A 928 351 939 02	set of brake pads without asbestos use also: mounting parts	-88	1	M 475
(10)	993 351 939 01	set of brake pads without asbestos use also: mounting parts	89-	1	
11	928 351 919 00	repair kit $ 42 MM	87	X	
(11)	928 351 919 01	repair kit $ 44 MM	-88	X	
(11)	928 351 919 10	repair kit $ 44 MM	89-	X	
(11)	951 351 919 01	set of seals $ 36 MM	-88	X	
(11)	951 351 919 10	repair kit $ 36 MM	89-	X	
12	993 351 959 00	repair kit		X	
12A	993 351 959 01	repair kit		X	
13	928 351 971 00	connecting line		2	
14	930 351 927 00	dust boot		4	
15	930 351 919 00	ventilation valve		4	
16	928 612 315 02	warning contact	-88	2	
(16)	928 612 365 01	warning contact	89-	2	
17	928 612 409 00	clip		6	
18	928 612 531 01	push-on connector	/L	1	
(18)	928 612 531 00	push-on connector	/R	1	
19	000 043 117 00	brake cylinder paste 1 50-g tube		X	
20	A 965 351 096 00	damping plate	89-	4	
20	965 351 096 00	damping plate $ 44 MM	89-	4	
21	964 351 096 01	damping plate $ 36 MM only together with 928.351.421/422.02	89-	4	
(20)	928 351 096 17	damping plate $ 44 MM		4	
(21)	928 351 096 19	damping plate $ 36 MM only together with 928.351.421/422.01		4	
(20)	928 351 096 18	damping plate $ 42 MM		4	
(21)	928 351 096 19	damping plate $ 36 MM only together with 928.351.421/422.00		4	
22	928 612 361 00	cable holder	89-	2	
		- -- E N D -- -			

Model	Year	MG	SG	Illustration	Restrictions	Update				
928	91	6	03	603-00		179	15:45	02.09.2004	PORSCHE	PET	PORSCHE

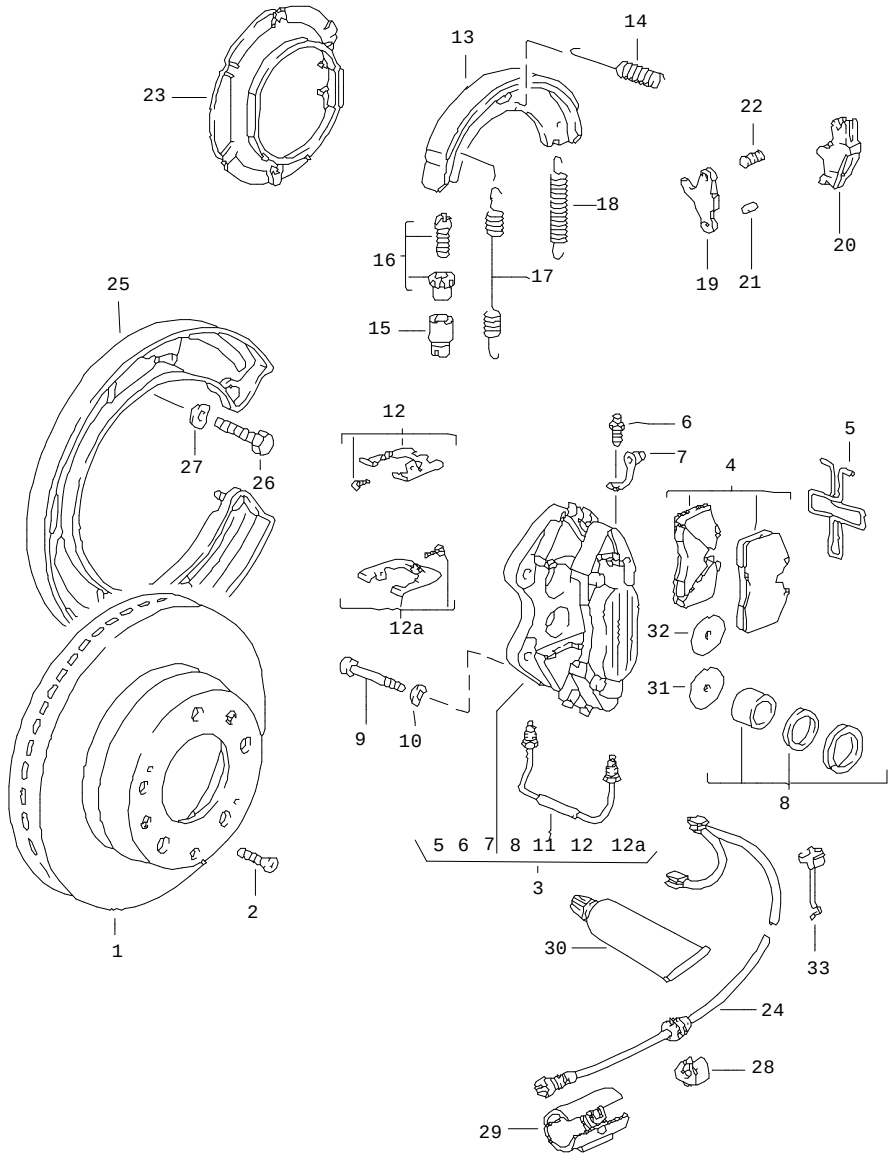

Pos	Part Number	Name	Remarks	Qty	Model
		disc brake rear see technical information GR.4 NR. 1/89			
1	951 352 041 01	brake disc		2	
2	N 033 167 1	countersunk-head screw M 6 X 12		4	
3	928 352 421 00	fixed calliper	/L -88	1	
3	928 352 421 01	fixed calliper	/L 89-	1	
(3)	928 352 422 00	fixed calliper	/R -88	1	
(3)	928 352 422 01	fixed calliper	/R 89-	1	
(4)	965 352 939 04	set of brake pads without asbestos use also: mounting parts		1	
5	951 352 950 00	expanding spring		2	
6	930 351 919 00	ventilation valve		2	
7	930 351 927 00	dust boot		2	
8	951 352 919 00	set of seals $ 30 MM	-88	X	
8	951 352 919 11	set of seals $ 30 MM	89-	X	
(8)	951 352 919 01	repair kit $ 28 MM	-88	X	
(8)	951 352 919 10	set of seals $ 28 MM	89-	X	
9	900 082 077 02	hexagon-head bolt M 12 X 1,5 X 37 X 20		4	
10	N 012 232 1	spring washer B 12		4	
11	951 352 971 00	connecting line		2	
12	993 352 959 00	repair kit		X	
12A	993 352 959 01	repair kit		X	
13	996 352 993 00	repair kit		4	

Pos	Part Number	Name	Remarks	Qty	Model
14	928 352 957 02	compression spring		4	
15	911 352 944 00	bush		2	
16	911 352 098 00	adjusting screw		2	
17	901 352 954 10	return spring		2	
18	901 352 932 10	return spring		2	
19	993 352 073 00	push-button lock		2	
20	993 352 073 00	push-button lock		2	
21	993 352 737 00	bolt		2	
22	928 352 447 00	bolt		2	
23	928 352 081 01	supporting plate		2	
24	928 612 313 02	warning contact	-88	2	
(24) A	928 612 363 01	warning contact	89	2	
(24)	928 612 363 01	warning contact	90-	2	
-	928 612 529 01	clip		4	
-	928 612 409 00	clip		6	
-	928 612 531 00	push-on connector	/L	1	
-	928 612 532 00	push-on connector	/R	1	
25	928 352 813 03	protective plate	/L -88	1	
25	928 352 813 05	protective plate	/L 89-	1	
(25)	928 352 814 03	protective plate	/R -88	1	
(25)	928 352 814 05	protective plate	/R 89-	1	
26	999 072 005 09	hexagon-head bolt M 6 X 12	-88	6	
26	N 010 217 9	hexagon-head bolt M 6 X 20	89-	4	
27	N 012 226 5	spring washer B 6		6	
28	928 612 409 00	clip		6	
29	928 612 531 01	push-on connector	/L	2	
(29)	928 612 531 00	push-on connector	/R	2	
30	000 043 117 00	brake cylinder paste 1 50-g tube		X	
31	964 352 096 00	damping plate $ 30 MM	89-	4	
32	964 352 096 01	damping plate $ 28 MM only together with 928.352.421/422.01	89-	4	
(31)	928 352 096 10	damping plate $ 30 MM	-88	4	
(32)	928 352 096 11	damping plate only together with 928.352.421/422.00	-88	4	
33	928 612 361 00	cable holder	89-	2	

- -- E N D -- -

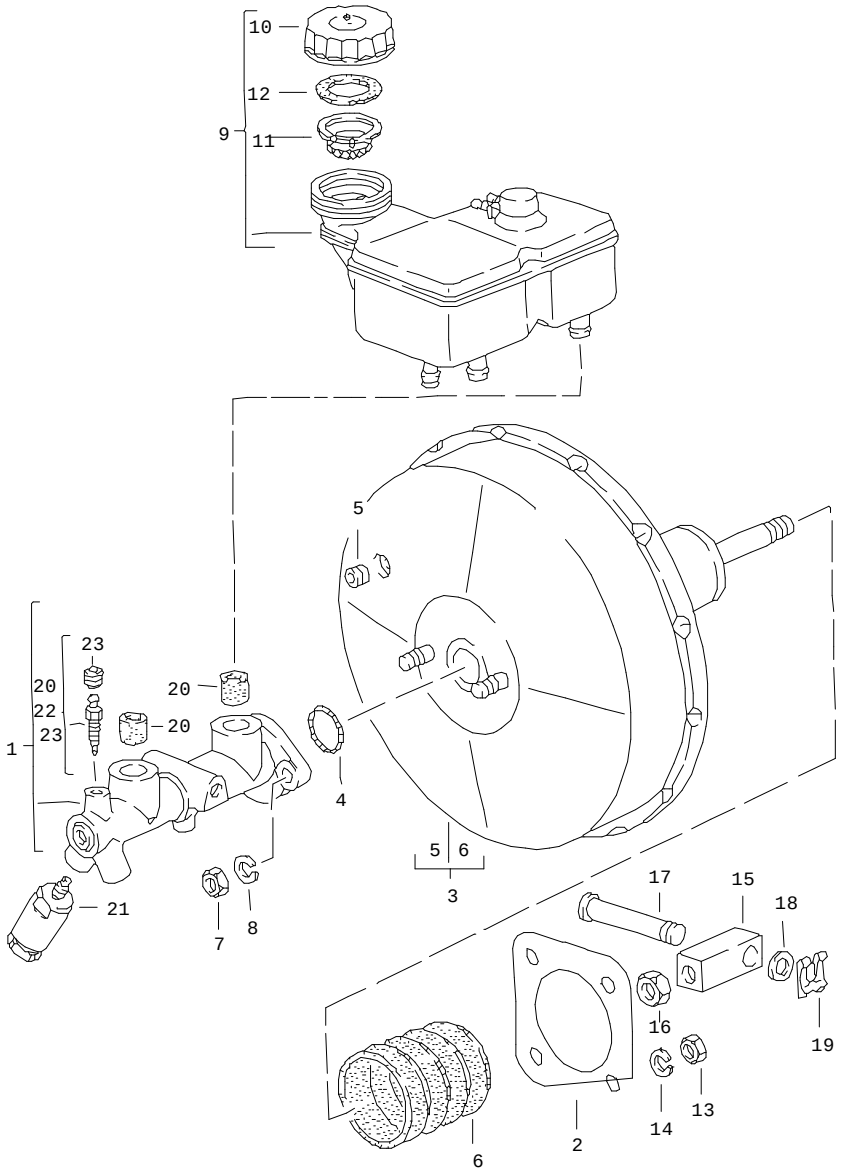

Pos	Part Number	Name	Remarks	Qty	Model
		brake master cylinder brake booster			
1	928 355 011 24	brake master cylinder	/LL	1	
(1)	927 355 011 24	brake master cylinder	/RL	1	
2	477 611 951	gasket		1	
3	928 355 023 09	vacuum booster		1	
(4)	944 355 819 00	gasket		1	
5	911 355 921 00	rubber seal		1	
6	477 611 115	bellows		1	
7	999 084 425 02	lock nut M 8		2	
8	N 011 525 13	washer A 8,4		2	
9	A 928 355 650 06	container complete		1	
(9)	928 355 650 06	brake fluid reservoir		1	
-	928 355 654 03	support for container		1	
10	477 611 361	cover		1	
11	211 611 381 B	strainer		1	
12	901 355 908 00	gasket		1	
13	900 910 022 09	lock nut M 8		4	
14	900 025 007 02	washer A 8,4		4	
15	928 355 563 01	intermediate piece		1	
16	900 034 003 02	hexagon nut M 10		1	
17	928 355 511 00	bolt		1	
18	900 025 009 02	washer A 13		1	

Pos	Part Number	Name	Remarks	Qty	Model	Pos	Part Number	Name	Remarks	Qty	Model
19	N 012 653 1	lock B 9		1							
20	911 355 922 00	plug		2							
21	951 355 305 01	brake pressure regulator		1							
22	928 351 945 03	ventilation valve		1							
23	901 351 927 10	dust boot		1							
		- -- E N D -- -									

Model	Year	MG	SG	Illustration	Restrictions	Update				
928	91	6	04	604-01		179	15:45	02.09.2004	PORSCHE	PET	PORSCHE

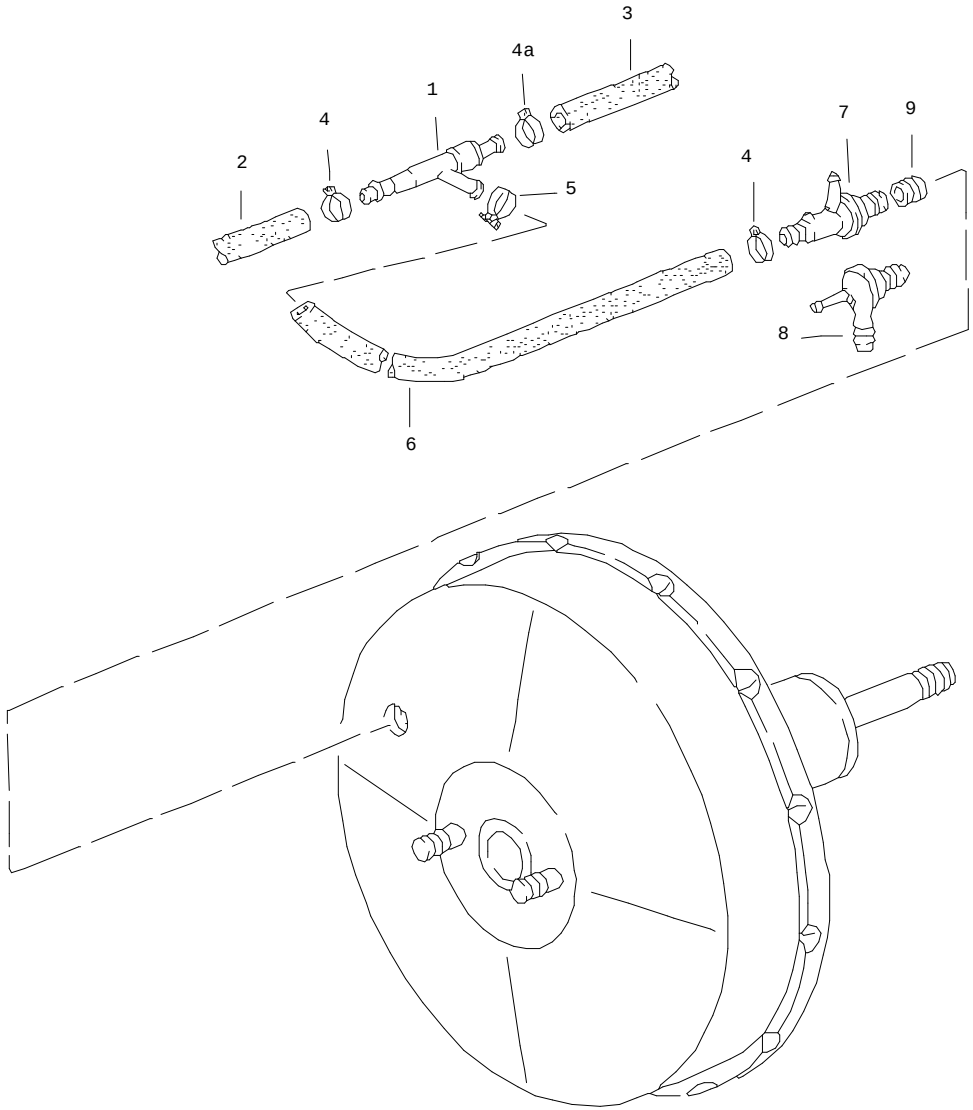

Pos	Part Number	Name	Remarks	Qty	Model
		venturi tube			
1	035 133 753 A	venturi tube		1	
2	-	vacuum hose see group 1/07/00			
3	-	vacuum hose see group 1/07/00			
4	999 512 457 00	clamp		2	
4A	999 512 554 00	hose clamp		1	
5	A 999 512 381 02	clamp		1	
5	999 512 456 00	clamp		1	
6	928 110 663 00	vacuum hose	/LL	1	
(6)	927 110 145 01	vacuum hose	/RL	1	
7	928 355 660 03	check valve	/LL	1	
8	477 611 933 A	check valve	/RL	1	
9	911 355 921 00	rubber seal		1	
		- -- E N D -- -			

Model	Year	MG	SG	Illustration	Restrictions	Update	15:45	02.09.2004	PORSCHE	PET	PORSCHE
928	91	6	04	604-05		179					

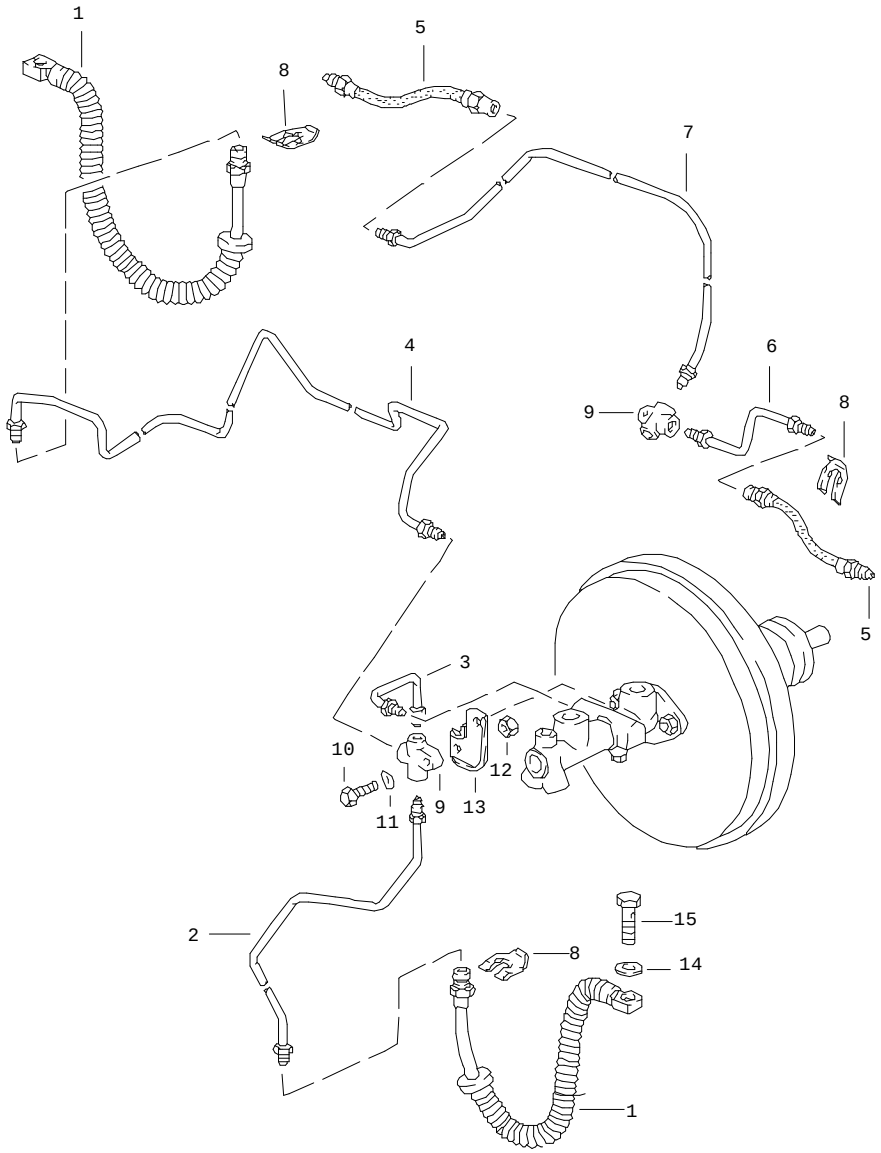

Pos	Part Number	Name	Remarks	Qty	Model
		brake lines			
1	928 355 081 02	brake hose front		2	
2	928 355 053 01	brake line left front	/LL	1	
(2)	927 355 053 01	brake line left front	/RL	1	
3	928 355 049 00	brake line	/LL	1	
(3)	927 355 049 00	brake line	/RL	1	
4	928 355 051 02	brake line front	/LL	1	
(4)	927 355 051 01	brake line front	/RL	1	
5	928 355 080 02	brake hose rear		2	
6	928 355 057 04	brake line rear	/L	1	
7	928 355 059 01	brake line rear	/R	1	
8	113 611 715 A	brake hose bracket		4	
9	914 355 667 00	distributor		4	
10	900 075 017 02	hexagon-head bolt M 6 X 25		2	
11	N 012 226 5	spring washer B 6		2	
12	900 076 010 02	hexagon nut M 6		2	
13	928 355 651 00	support	/LL	1	
(13)	927 355 651 00	support	/RL	1	
14	N 013 806 2	sealing ring A 10 X 14		2	
15	999 134 027 02	banjo bolt M 10 X 1		2	

Pos	Part Number	Name	Remarks	Qty	Model	Pos	Part Number	Name	Remarks	Qty	Model
		- -- E N D -- -									

Model	Year	MG	SG	Illustration	Restrictions	Update				
928	91	6	04	604-10		179	15:45	02.09.2004	PORSCHE	PET	PORSCHE

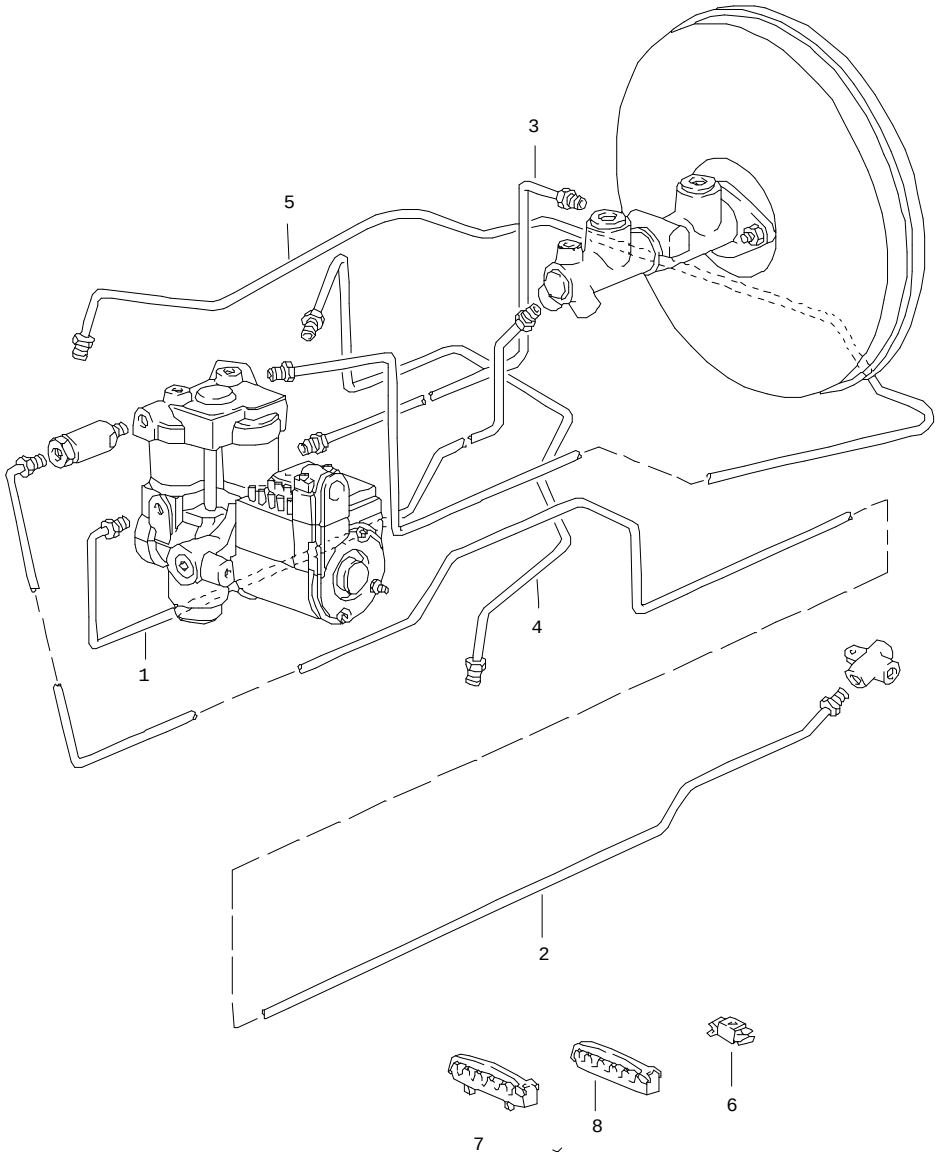

Pos	Part Number	Name	Remarks	Qty	Model
		brake lines anti-lock brake system			
1	928 355 131 00	brake line	/LL	1	
(1)	927 355 131 00	brake line	/RL	1	
2	928 355 137 02	brake line		1	
3	928 355 141 00	brake line	/LL	1	
(3)	927 355 141 00	brake line	/RL	1	
4	928 355 147 01	brake line		1	
5	928 355 148 02	brake line	/LL	1	
(5)	927 355 148 01	brake line	/RL	1	
6	477 611 767 B	cable clip		17	
7	928 355 637 00	support		2	
8	928 355 637 01	support		1	
		- -- E N D -- -			

Model	Year	MG	SG	Illustration	Restrictions	Update	15:45	02.09.2004	PORSCHE	PET	PORSCHE
928	91	6	04	604-15		179					

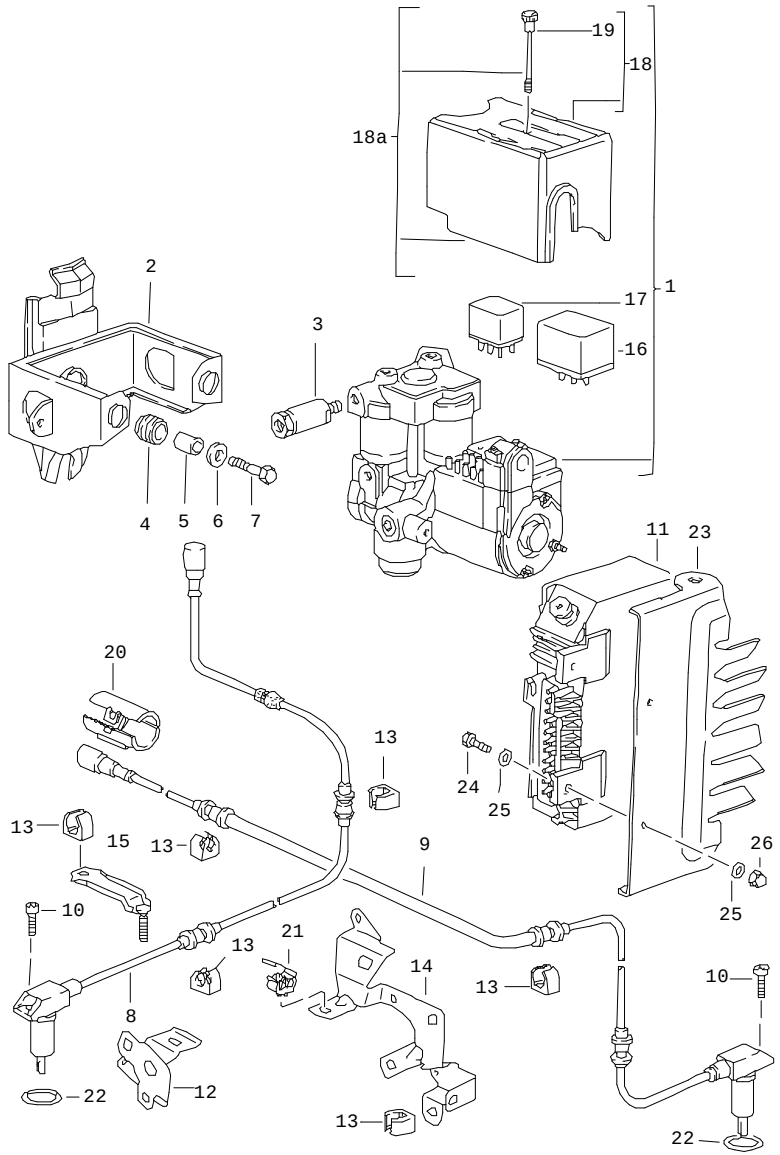

Pos	Part Number	Name	Remarks	Qty	Model
		hydraulic unit speed sensor control unit anti-lock brake system			
1	928 355 755 04	hydraulic unit	87	1	
(1)	928 355 755 04	hydraulic unit	88	1	
(1) A	928 355 755 05	hydraulic unit	89-	1	
(1)	928 355 955 00	hydraulic unit	90-	1	
2	928 355 041 04	support		1	
3	951 355 305 01	brake pressure regulator		1	
4	928 355 635 00	rubber mounting		3	
5	928 355 633 00	bush		3	
6	N 011 666 7	washer B 6,4		3	
7	N 010 219 2	hexagon-head bolt M 6 X 28		3	
8	928 606 404 02	speed sensor	/V	2	
9	928 606 402 01	speed sensor	/H	2	
10	N 014 740 2	pan-head screw M 6 X 16	/V	2	
(10)	N 014 743 2	pan-head screw M 6 X 30	/H	2	
11	928 618 118 00	control unit	-88	1	
(11)	928 618 118 00	control unit	89	1	
(11)	928 618 120 01	control unit	90-	1	
-	927 618 073 00	bracket for control unit left	/RL -89	1	
-	927 618 074 00	bracket for control unit right	/RL -89	1	
12	928 341 239 00	support	/L	1	

Pos	Part Number	Name	Remarks	Qty	Model
(12)	928 341 240 00	support	/R	1	
13	928 612 409 00	clip		X	
14	928 331 239 00	support	/L	1	
(14)	928 331 240 00	support	/R	1	
15	928 331 099 01	support		2	
16	928 618 930 00	relay for hydraulic unit 928.355.755.01	87	1	
(16)	928 618 930 01	relay for hydraulic unit 928.355.755.04/05/06	88-	1	
17	928 618 931 00	relay for hydraulic unit 928.355.755.01	87	1	
(17)	928 618 931 01	relay for hydraulic unit 928.355.755.04	88	1	
(17)	928 618 931 02	relay for hydraulic unit 928.355.755.05/06	89-	1	
18	928 355 960 00	cap for hydraulic unit 928.355.755.01	87	1	
18A	928 355 960 01	cap for hydraulic unit 928.355.755.04/05/06	88-	1	
19	928 355 961 00	knurled screw for hydraulic unit 928.355.755.01	87	1	
20	928 612 531 01	push-on connector	/L	1	
(20)	928 612 531 00	push-on connector	/R	1	
21	928 612 529 01	clip		4	
22	900 174 032 40	round seal 18 X 2,5		4	
23	928 618 433 00	cooling plate	/LL 90-	1	
(23)	927 618 433 00	cooling plate	/RL 90	1	
(23)	927 618 433 01	cooling plate	/RL 91	1	
24	900 075 057 02	hexagon-head bolt M 6 X 16	90-	2	
25	N 011 524 7	washer A 6,4	90-	4	
26	N 011 121 1	cap nut M 6	90-	2	

- -- E N D -- -

Model	Year	MG	SG	Illustration	Restrictions	Update		
928	91	6	98	REP		179	16:21	02.09.2004

Pos	Part Number	Name	Remarks	Qty	Model
		repair kits			
>>	> 928 351 939 01	repair kit (JURID 238) comprising: brake pad use also: mounting parts	/V	1 4	
>>	> 928 351 939 02	set of brake pads without asbestos (TEXTAR T 400) comprising: brake pad use also: mounting parts	/V	1 4	M 475
>>	> 993 351 939 01	set of brake pads without asbestos (TEXTAR T 428 FF) comprising: brake pad use also: mounting parts	/V	1 4	
>>	> 928 351 919 00	repair kit comprising: piston boot inner boot outer $ 42 MM	/V	2 1 1 1	
>>	> 928 351 919 01	repair kit comprising: piston boot inner boot outer $ 44 MM	/V	2 1 1 1	
>>	> 951 351 919 01	set of seals comprising: piston boot inner boot outer $ 36 MM	/V	2 1 1 1	
>>	> 993 351 959 00	repair kit comprising: spring plate screw lower	/V	2 1 2	

Model	Year	MG	SG	Illustration	Restrictions	Update		
928	91	6	98	REP		179	16:21	02.09.2004

Pos	Part Number	Name	Remarks	Qty	Model
>>	> 993 351 959 01	repair kit	/V	2	
		comprising:			
		spring plate		1	
		screw		2	
		upper			
>>	> 951 351 939 01	set of brake pads	/H	1	
		(JURID 238)			
		comprising:			
		brake pad		4	
		use also:			
		mounting parts			
>>	> 965 352 939 04	set of brake pads	/H	1	
>>	> 965 352 939 04	set of brake pads		1	
		without asbestos			
		(TEXTAR T 428)			
		comprising:			
		brake pad		4	
		use also:			
		mounting parts			
>>	> 951 352 919 00	set of seals	/H	2	
		comprising:			
		piston		1	
		boot		1	
		inner			
		boot		1	
		outer			
		$ 30 MM			
>>	> 951 352 919 01	repair kit	/H	2	
		comprising:			
		piston		1	
		boot		1	
		inner			
		boot		1	
		outer			
		$ 28 MM			
>>	> 993 352 959 00	repair kit	/H	2	
		comprising:			
		spring plate		1	
		upper			
		screw		2	
>>	> 993 352 959 01	repair kit	/H	2	
		comprising:			
		spring plate		1	
		lower			
		screw		2	
		- -- E N D -- -			

Model	Year	MG	SG	Illustration	Restrictions	Update	15:46	02.09.2004	PORSCHE	PET	PORSCHE
928	91	7	01	701-00		179					

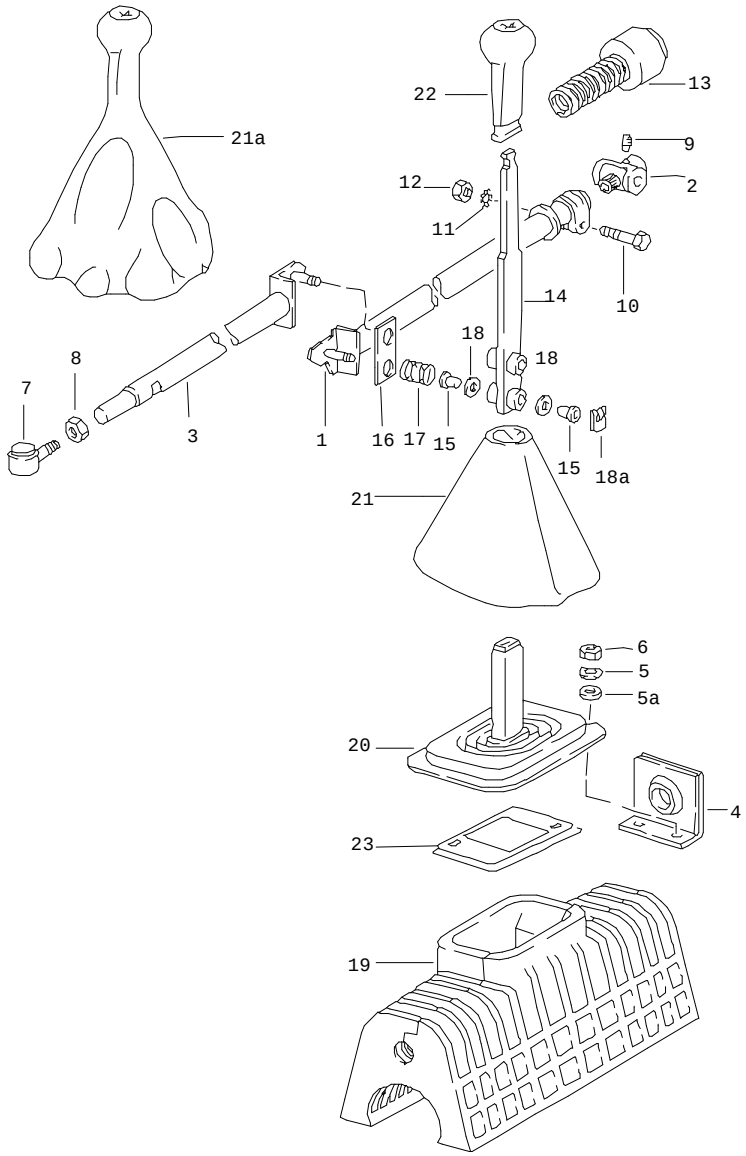

Pos	Part Number	Name	Remarks	Qty	Model
		shift mechanism for cars with manual transmission			
1	928 424 028 19	gear shift rod		1	
2	928 424 029 00	bearing body		1	
3	928 424 009 10	guide tube		1	
4	928 424 017 05	bearing bracket		1	
5	999 523 104 02	lock washer 6 PN		2	
6	900 076 010 02	hexagon nut M 6		2	
7	928 424 005 01	angular joint		1	
8	900 034 003 02	hexagon nut M 10		1	
9	928 424 229 00	conical screw		1	
10	N 040 222 2	hexagon-head bolt M 8 X 32		1	
11	999 523 102 02	lock washer		1	
12	900 076 025 02	hexagon nut M 8		1	
13	928 424 209 01	bellows		1	
14	928 424 067 11	gearshift lever	/LL	1	
(14)	927 424 067 00	gearshift lever	/RL	1	
14	928 424 067 50	gearshift lever		1	M 637 M 639
15	999 924 002 40	plain bearing		4	
16	928 424 149 02	connecting piece		1	
17	928 424 147 03	compression spring		2	
18	900 234 510 02	support washer S 10 X 16		2	
19	928 424 182 03	sound absorber		1	
20	928 424 181 04	sleeve		1	

Pos	Part Number	Name	Remarks	Qty	Model
21A	928 424 073 03	head shift rod with leather bellows	-90	1	
	1AJ	black	-90		
	7LD	burgundy	-90		
	5JX	greyish green	-88		
	8LY	mahogany	-90		
	3UY	caramel	-88		
	3UJ	caramel	-90		
	7JJ	venetian blue	-90		
	4MT	velvet red	-90		
	2WT	slate grey	-90		
	8KY	marine blue	-90		
21A	928 424 073 04	head shift rod with leather bellows	-91	1	
	1AJ	black			
	6XL	classic grey			
	9YL	cobalt blue			
	6YL	magenta			
	M05	matador red			
	D35	carrara grey			
	J25	sherwood green			
	L07	scala red			
	A37	greenwich grey			
23	928 552 017 00	frame		1	
		- -- E N D -- -			

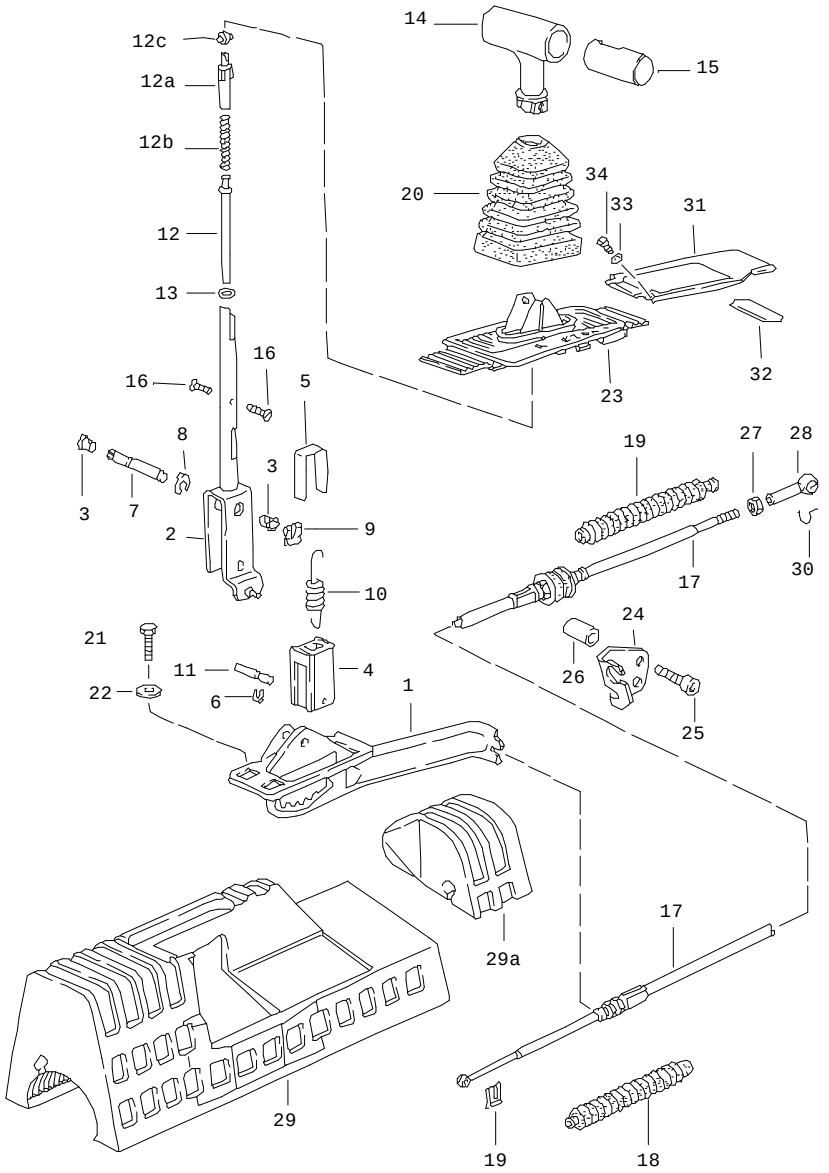

Pos	Part Number	Name	Remarks	Qty	Model
		shift mechanism for cars with automatic transmission			
1	928 426 031 00	support		1	
2	928 426 261 01	selector lever		1	
3	999 924 001 40	bush		2	
4	922 424 172 00	locking piece		1	
5	922 424 171 01	clip		1	
6	999 166 040 02	kl-lock		1	
7	928 426 166 00	pin		1	
9	999 166 005 02	sl-lock		1	
10	928 426 168 01	tension spring		1	
11	922 424 167 01	straight pin		1	
12	928 426 293 01	push rod		1	
12A	928 426 271 01	guide		1	
12B	999 521 037 01	compression spring		1	
12C	321 713 137	roller		1	
13	999 701 608 40	round seal 5 X 2 B		2	
14	928 426 075 01	selector knob	/LL	1	
	1AJ	black			
	7LD	burgundy	-90		
	5JX	greyish green	-88		
	8LY	mahogany	-90		
	3UY	caramel	-88		
	3UJ	caramel	-90		
	8KY	marine blue	-90		
	7JJ	venetian blue	-90		
	4MT	velvet red	-90		

Pos	Part Number	Name	Remarks	Qty	Model
	2WT	slate grey	-90		
	8YR	black	91-		
	6XL	classic grey	91-		
	9YL	cobalt blue	91-		
	6YL	magenta	91-		
	M05	matador red	91-		
	D35	carrara grey	91-		
	J25	sherwood green	91-		
	L07	scala red	91-		
	A37	greenwich grey	91-		
(14)	927 426 075 01	selector knob	/RL	1	
	1AJ	black			
	7LD	burgundy	-90		
	5JX	greyish green	-90		
	8LY	mahogany	-90		
	3UY	caramel	-88		
	3UJ	caramel	-90		
	8KY	marine blue	-90		
	7JJ	venetian blue	-90		
	4MT	velvet red	-90		
	2WT	slate grey	-90		
	8YR	black	91-		
	6XL	classic grey	91-		
	9YL	cobalt blue	91-		
	6YL	magenta	91-		
	M05	matador red	91-		
	D35	carrara grey	91-		

Pos	Part Number	Name	Remarks	Qty	Model
	J25	sherwood green	91-		
	L07	scala red	91-		
	A37	greenwich grey	91-		
15	U 928 426 275 01	adjusting lever		1	
16	N 014 121 6	oval-head screw M 4 X 6		2	
17	928 426 033 04	cable		1	
18	922 424 103 00	bellows		2	
19	N 012 644 1	lock		1	
20	928 426 139 00	bellows		1	
21	900 075 057 02	hexagon-head bolt M 6 X 16		3	
22	N 011 550 1	washer B 6,5		3	
23	927 552 091 20	frame	/RL	1	
(23)	928 552 091 20	frame		1	
24	928 426 111 04	retaining bracket		1	
25	N 014 715 3	pan-head screw		2	
26	928 426 113 00	spacer sleeve		2	
27	N 011 005 14	hexagon nut M 5		1	
28	911 423 147 00	ball socket		1	
29	928 426 187 00	sound absorber lower part		1	
29A	928 426 188 00	sound absorber upper part		1	
30	900 169 014 02	securing clip		1	
31	928 552 181 02	mounting shift gate		1	
32	928 552 317 02	separator for mounting mounting shift gate		1	

Pos	Part Number	Name	Remarks	Qty	Model	Pos	Part Number	Name	Remarks	Qty	Model
33	900 114 015 01	shake-proof washer A 3,7		2							
34	900 146 032 02	oval-head screw AM 3,5 X 10		2							
		- -- E N D -- -									

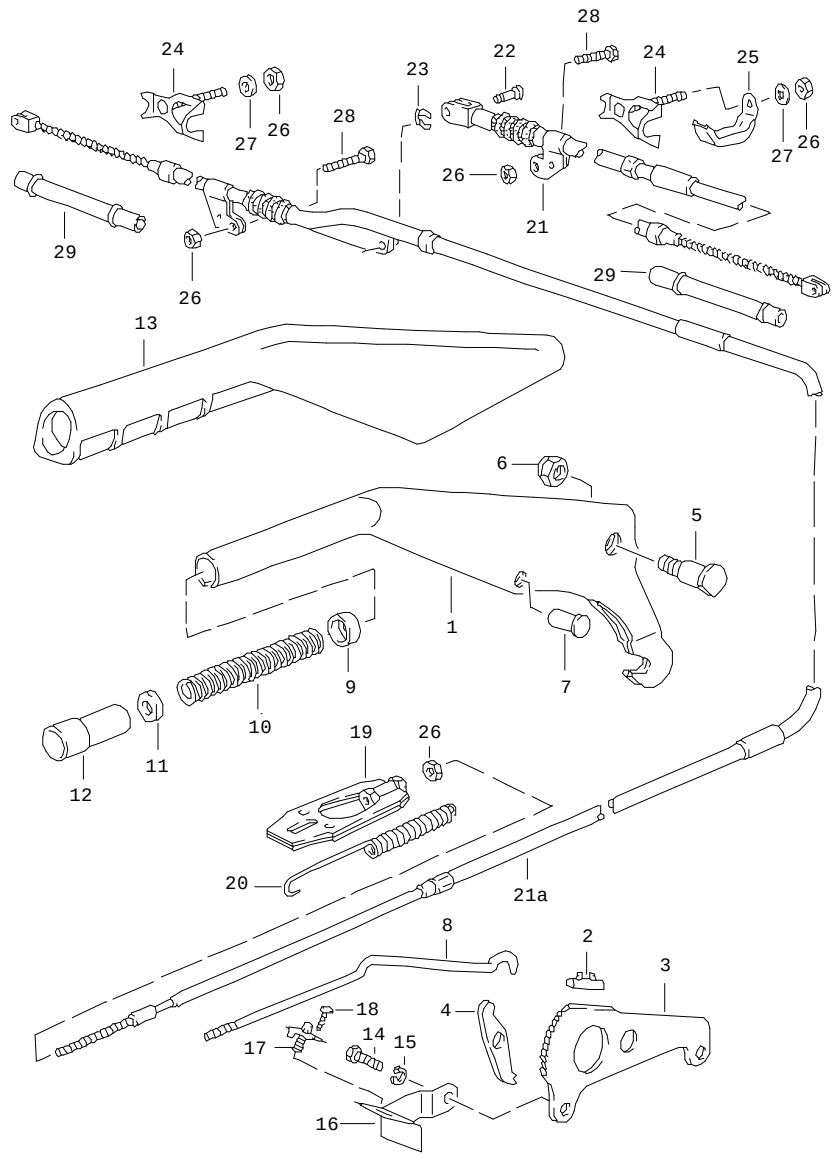

Pos	Part Number	Name	Remarks	Qty	Model
		actuator handbrake			
1	928 424 253 13	parking-brake lever	-90	1	
1A	928 424 051 00	parking-brake lever	91-	1	
	8YR	black			
	1AJ	black			
	6XL	classic grey			
	9YL	cobalt blue			
	6YL	magenta			
	M05	matador red			
	D35	carrara grey			
	J25	sherwood green			
2	901 424 509 01	stop		1	
3	928 424 541 14	locking segment		1	
4	928 424 508 00	pawl		1	
5	928 424 527 00	pin		1	
6	900 084 004 02	hexagon nut		1	
7	900 120 040 02	rivet		1	
8	928 424 255 12	push rod		1	
9	914 424 258 00	guide sleeve		1	
10	901 424 543 00	compression spring		1	
11	901 424 593 01	rubber ring		1	
12	928 424 523 12	push button		1	
13	928 424 259 00	parking-brake lever	-90	1	
14	N 010 239 11	hexagon-head bolt M 8 X 18		2	
15	900 027 015 02	lock ring B 8		2	
16	928 424 535 00	support	/LL	1	

Pos	Part Number	Name	Remarks	Qty	Model
(16)	927 424 535 00	support	/RL	1	
17	113 947 561 G	contact switch		1	
18	N 013 957 5	tapping screw B 3,5 X 9,5		1	
19	928 424 033 00	connecting piece		1	
20	477 711 975	return spring		1	
21	928 424 551 16	parking-brake cable	/L	1	
21A	928 424 552 16	parking-brake cable	/R	1	
22	999 166 048 02	bolt A 6 X 17 X 14		1	
23	N 012 645 2	lock		1	
24	928 424 045 00	support		1	
25	928 424 423 01	support		1	
26	900 910 010 02	lock nut		5	
27	N 011 524 7	washer A 6,4		2	
28	900 074 111 02	hexagon-head bolt M 6 X 50		2	M 481
(28)	N 010 349 5	hexagon-head bolt M 6 X 45		2	M 249
29	928 424 405 01	guide tube		2	
		- -- E N D -- -			

Pos	Part Number	Name	Remarks	Qty	Model

Model	Year	MG	SG	Illustration	Restrictions	Update	15:46	02.09.2004	PORSCHE	PET	PORSCHE
928	91	7	02	702-00		179					

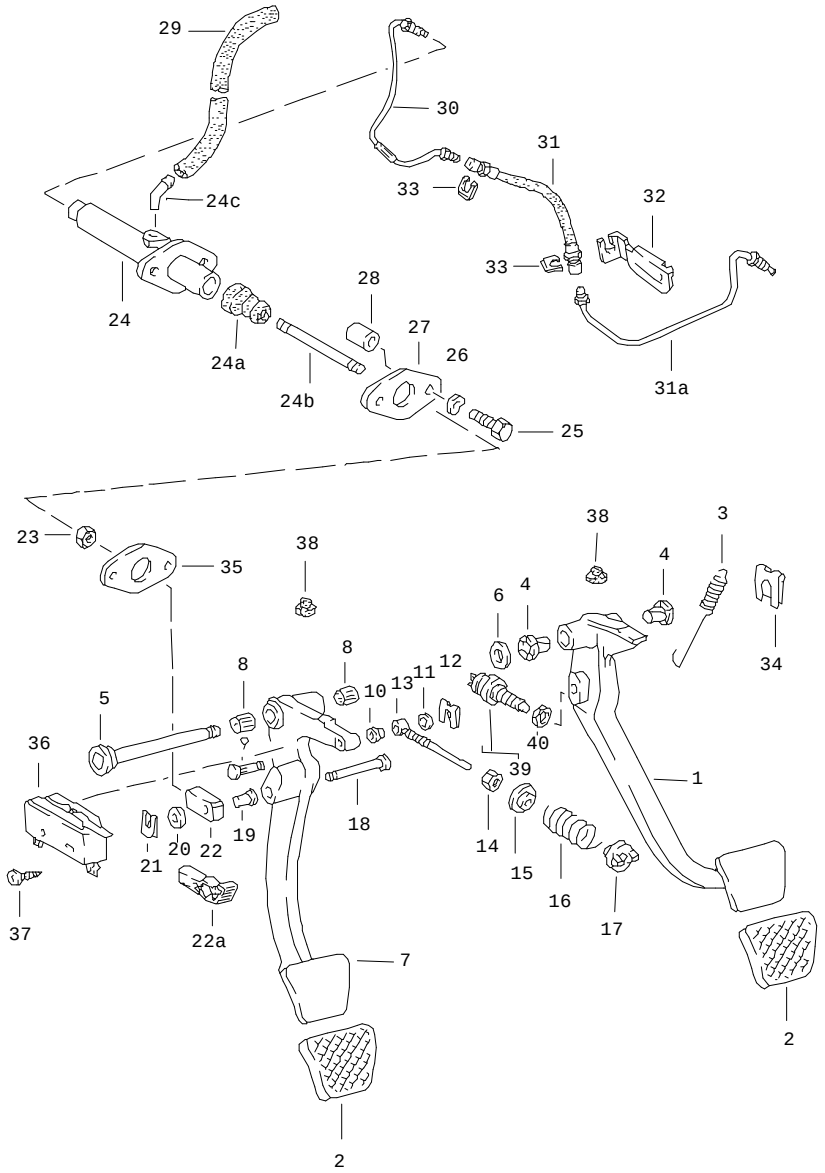

Pos	Part Number	Name	Remarks	Qty	Model
		pedals			
1	928 423 501 05	brake pedal	/LL	1	M 481
(1)	927 423 501 07	brake pedal	/RL	1	M 481
(1)	928 423 515 01	brake pedal	/LL	1	M 249
(1)	927 423 501 08	brake pedal	/RL	1	M 249
2	928 423 210 03	rubber pad		2	
(2)	928 423 211 00	cap		1	M 249
3	928 423 531 03	return spring		1	
4	928 423 542 00	bearing sleeve		2	
5	928 423 037 02	shaft		1	
-	928 423 523 00	spacer sleeve		1	M 249
6	N 011 565 3	washer		2	
7	A 927 423 311 05	clutch pedal	/RL	1	
7	927 423 311 05	clutch pedal	/RL	1	
7	A 928 423 311 09	clutch pedal	/LL	1	
7	928 423 311 09	clutch pedal	/LL	1	
8	900 317 001 00	needle-roller bearing		2	
9	928 423 355 00	bolt		1	
9	U 928 423 355 01	bolt		1	
10	999 924 001 40	bush		1	
11	900 089 006 02	washer A 8,4		1	
12	N 900 470 01	lock washer		1	
13	928 423 349 01	guiding rod		1	
14	900 076 025 02	hexagon nut M 8		1	
15	928 423 353 00	concave washer		1	
16	928 423 357 04	clutch power spring		1	

Pos	Part Number	Name	Remarks	Qty	Model
17	928 423 351 00	knife-edge bearing		1	
18	928 423 513 00	bolt	/LL	1	
19	999 924 002 40	plain bearing	/LL	1	
20	900 025 008 09	washer A 10,5	/LL /LL	1	
21	999 166 034 02	sl-lock	/LL	1	
22	928 423 517 00	clevis	/LL	1	
22A	999 168 017 40	ball socket	/RL	1	
23	900 076 025 02	hexagon nut M 8		1	
24	928 423 173 06	clutch master cylinder	/LL	1	
(24)	927 423 173 02	clutch master cylinder	/RL	1	
24A	928 423 908 00	bellows		1	
24B	928 423 187 00	piston rod	/LL	1	
(24B)	927 423 187 01	piston rod	/RL	1	
24C	477 721 177	angled pipe		1	
25	N 010 340 4	hexagon-head bolt M 8 X 40		2	
26	N 012 241 8	spring washer B 8		2	
27	928 423 521 00	cover plate		1	
28	928 423 519 00	spacer tube		2	
-	999 181 021 50	hose		*	
29	-	375 MM		1	
30	928 423 197 02	clutch tube	/LL -90	1	
30	928 423 197 04	clutch tube	/LL 91-	1	
(30)	927 423 185 02	clutch tube	/RL	1	
31	A 928 423 077 00	clutch hose	/LL	1	
(31)	A 928 423 077 07	clutch hose	/LL	1	
(31)	928 423 077 07	clutch hose	/LL	1	
(31)	927 423 077 00	clutch hose	/RL -88	1	
(31)	A 927 423 077 08	clutch hose	/RL 89	1	
(31)	927 423 077 08	clutch hose	/RL 90-	1	
31A	928 423 199 03	clutch tube	/LL	1	
32	928 423 189 01	bump stop	/LL	1	
-	N 011 010 6	hexagon nut M 10		1	
(32)	927 423 189 00	support	/RL	1	
33	928 423 183 01	hose holder	/LL	2	
33	928 423 183 01	hose holder	/RL	1	
34	N 012 654 1	lock		1	
35	928 423 191 00	gasket		1	
36	928 613 413 01	microswitch		1	
37	900 143 013 02	oval-head sheetmetal screw B 2,9 X 16		2	
38	999 703 183 40	buffer		2	
39	477 945 515	stop light switch		1	
40	481 945 529	nut M 12 X 1		1	
		vertical pedal adjustment 15 MM for brake pedal and clutch pedal			
-	928 423 207 00	spacer plate		2	M 481
-	928 423 213 00	spacer plate		1	M 249
-	900 067 057 02	pan-head screw M 8 X 20		2	
-	900 115 013 01	serrated lock washer see technical information GR. X NR. 15		2	

Pos	Part Number	Name	Remarks	Qty	Model
		vertical pedal adjustment 30 MM for brake pedal and clutch pedal			
-	928 423 207 00	spacer plate		4	M 481
-	928 423 213 00	spacer plate		2	M 249
-	900 067 081 02	pan-head screw M 8 X 35		2	
-	900 115 013 01	serrated lock washer see technical information GR. X NR. 15		2	
		- -- E N D -- -			

Pos	Part Number	Name	Remarks	Qty	Model

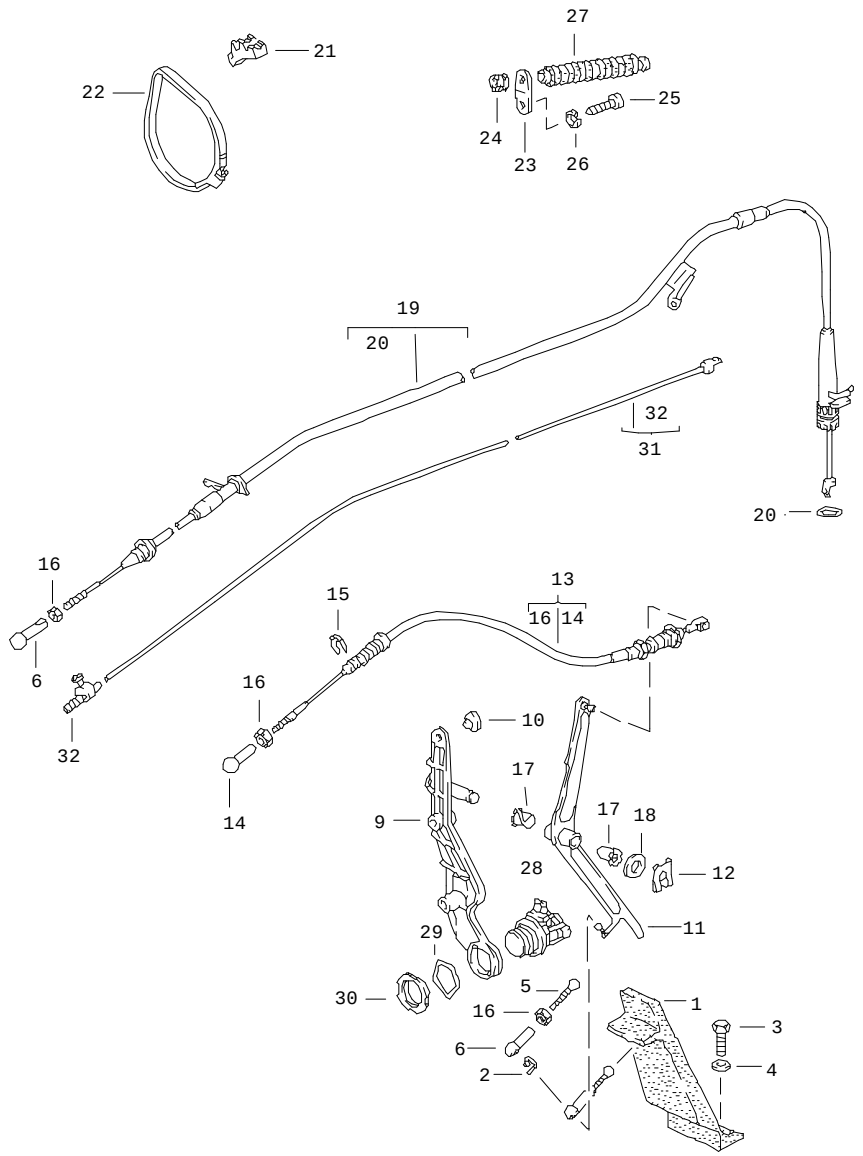

Pos	Part Number	Name	Remarks	Qty	Model
		accelerator control left-hand drive			
1	911 423 111 02	accelerator pedal		1	
2	900 169 014 02	securing clip		1	
3	999 072 005 09	hexagon-head bolt M 6 X 12		2	
4	N 011 666 7	washer B 6,4		2	
5	928 423 119 00	push rod		1	
6	911 423 147 00	ball socket		1	
9	928 423 021 03	bearing bracket		1	
-	900 076 010 02	hexagon nut M 6		2	
-	N 012 226 5	spring washer B 6		2	
(10)	999 703 183 40	buffer		1	
11	928 423 250 05	reverse lever		1	
12	999 166 034 02	sl-lock		1	
13	928 423 023 08	accelerator cable		1	
14	911 423 147 00	ball socket		1	
15	999 166 046 02	lock		2	
16	N 011 005 14	hexagon nut BM 5		3	
17	999 924 002 40	plain bearing		2	
18	900 234 041 01	shim 10 X 16 X 1,3		1	
19	928 423 041 06	cable for control pressure		1	M 249
20	999 701 960 40	sealing ring		1	
21	928 423 141 00	support		2	M 249
22	999 512 355 02	hose clamp		2	M 249

Pos	Part Number	Name	Remarks	Qty	Model
23	928 423 143 00	support		1	M 249
24	999 702 119 50	rubber sleeve		1	M 249
25	N 010 210 7	hexagon-head bolt M 6 X 10		1	
26	N 011 524 7	washer A 6,4		1	
27	928 423 277 00	sealing sleeve		1	M 249
28	928 606 111 00	kickdown switch		1	M 249
29	928 613 419 00	spring washer		1	M 249
30	928 613 421 00	grooved nut M 28 X 1,5		1	M 249
31	928 423 901 02	cable		1	M 249
32	477 723 601	nipple		1	M 249
		vertical pedal adjustment 15 MM			
-	928 423 133 04	bump stop		1	
-	928 423 119 01	push rod	/LL	1	
-	927 423 119 01	push rod	/RL	1	
-	911 423 147 00	ball socket		1	
-	N 011 005 14	hexagon nut M 5 see technical information GR. X NR. 15		1	
		vertical pedal adjustment 30 MM			
-	928 423 133 05	bump stop		1	
-	928 423 119 02	push rod	/LL	1	
-	927 423 119 01	push rod	/RL	1	
-	911 423 147 00	ball socket		1	
-	N 011 005 14	hexagon nut M 5 see technical information GR. X NR. 15		1	

Pos	Part Number	Name	Remarks	Qty	Model
		- -- E N D -- -			

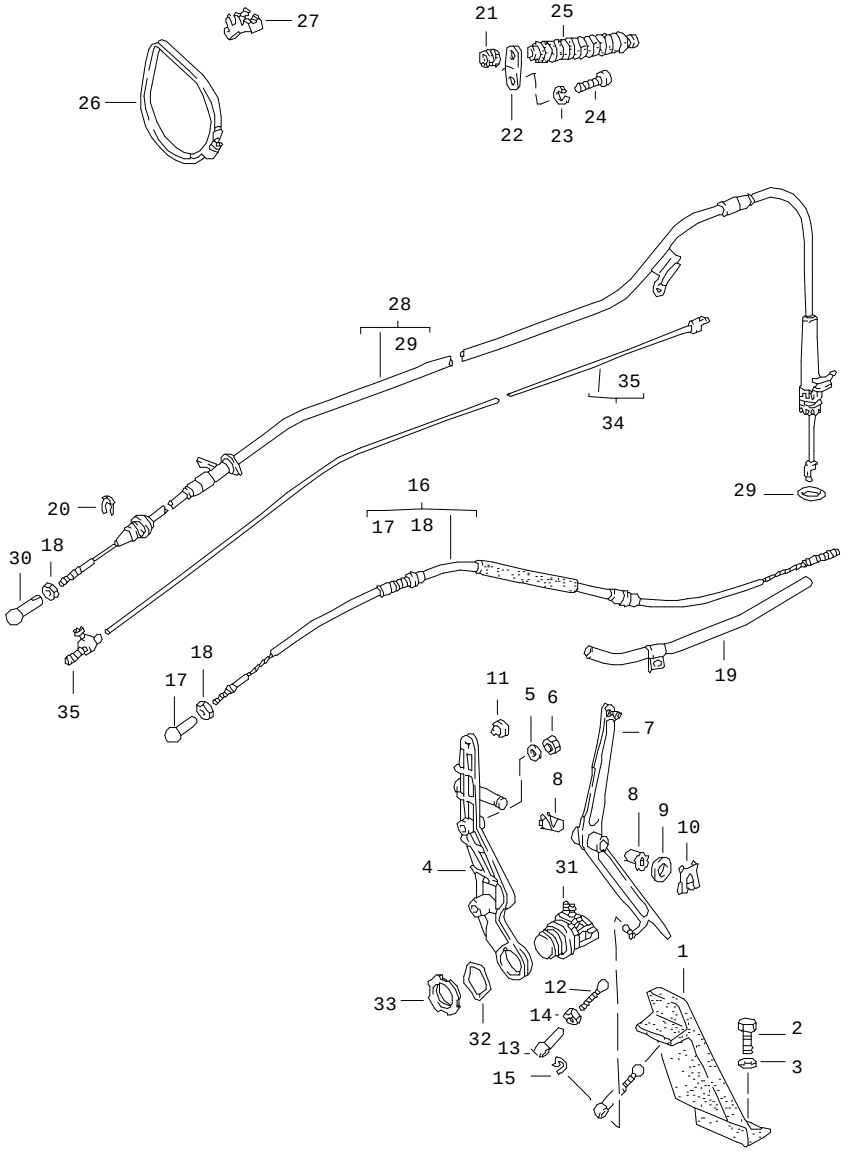

Pos	Part Number	Name	Remarks	Qty	Model
		accelerator control right-hand drive			
1	911 423 111 02	accelerator pedal		1	
2	999 072 005 09	hexagon-head bolt M 6 X 12		2	
3	N 011 666 7	washer B 6,4		2	
4	927 423 129 03	bearing bracket		1	
5	900 076 025 02	hexagon nut M 8		2	
6	N 012 241 8	spring washer B 8		2	
7	927 423 250 02	reverse lever		1	
8	999 924 002 40	plain bearing		2	
9	900 234 041 01	shim 10 X 16 X 1,3		1	
10	999 166 034 02	sl-lock		2	
11	999 703 183 40	buffer		2	
12	927 423 119 00	push rod		1	
13	911 423 147 00	ball socket		3	
14	N 011 005 14	hexagon nut M 5		1	
15	900 169 014 02	securing clip		1	
16	927 423 023 05	accelerator cable		1	
17	N 015 521 3	ball socket		2	
18	N 011 005 14	hexagon nut M 5		2	
19	927 423 025 03	guide tube		1	
20	999 166 046 02	lock		1	M 249
21	999 702 119 50	rubber sleeve		1	M 249
22	928 423 143 00	support		1	M 249

Pos	Part Number	Name	Remarks	Qty	Model
23	N 011 524 7	washer A 6,4		1	M 249
24	N 010 210 7	hexagon-head bolt M 6 X 10		1	M 249
25	928 423 277 00	sealing sleeve		1	M 249
26	999 512 355 02	hose clamp		2	M 249
27	928 423 141 00	support		2	M 249
28	928 423 041 06	cable for control pressure		1	M 249
29	999 701 960 40	sealing ring		1	
30	911 423 147 00	ball socket		1	
31	928 606 111 00	kickdown switch		1	M 249
32	928 613 419 00	spring washer		1	M 249
33	928 613 421 00	grooved nut		1	M 249
34	928 423 901 01	cable		1	M 249
35	477 723 601	nipple		1	M 249
		vertical pedal adjustment 15 MM			
-	928 423 133 04	bump stop		1	
-	927 423 119 01	push rod		1	
-	911 423 147 00	ball socket		1	
-	N 011 005 14	hexagon nut M 5		1	
		vertical pedal adjustment 30 MM			
-	928 423 133 05	bump stop		1	
-	927 423 119 01	push rod		1	
-	911 423 147 00	ball socket		1	
-	N 011 005 14	hexagon nut M 5		1	

Pos	Part Number	Name	Remarks	Qty	Model
		- -- E N D -- -			

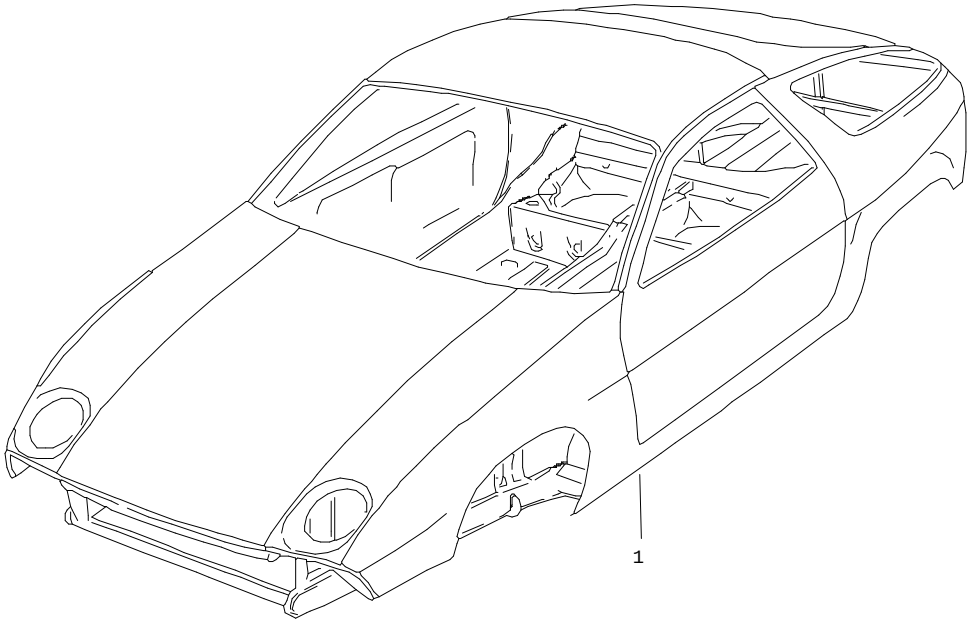

Pos	Part Number	Name	Remarks	Qty	Model
		body in white prime coated sealed sprayed with filler with underbody protection bodyshells can only be delivered of the current model year			
1	928 500 901 08	body in white	/LL	1	
(1)	928 500 901 09	body in white	/LL	1	AUT.
(1)	928 500 901 11	body in white	/RL	1	
(1)	928 500 901 13	body in white	/RL	1	AUT.
(1)	928 500 901 66	body in white	/LL	1	M 650
(1)	928 500 901 67	body in white	/LL	1	M 650 AUT.
(1)	928 500 901 69	body in white	/RL	1	M 650
(1)	928 500 901 71	body in white	/RL	1	M 650 AUT.
		- -- E N D -- -			

Model	Year	MG	SG	Illustration	Restrictions	Update	15:47	02.09.2004	PORSCHE	PET	PORSCHE
928	91	8	01	801-05		179					

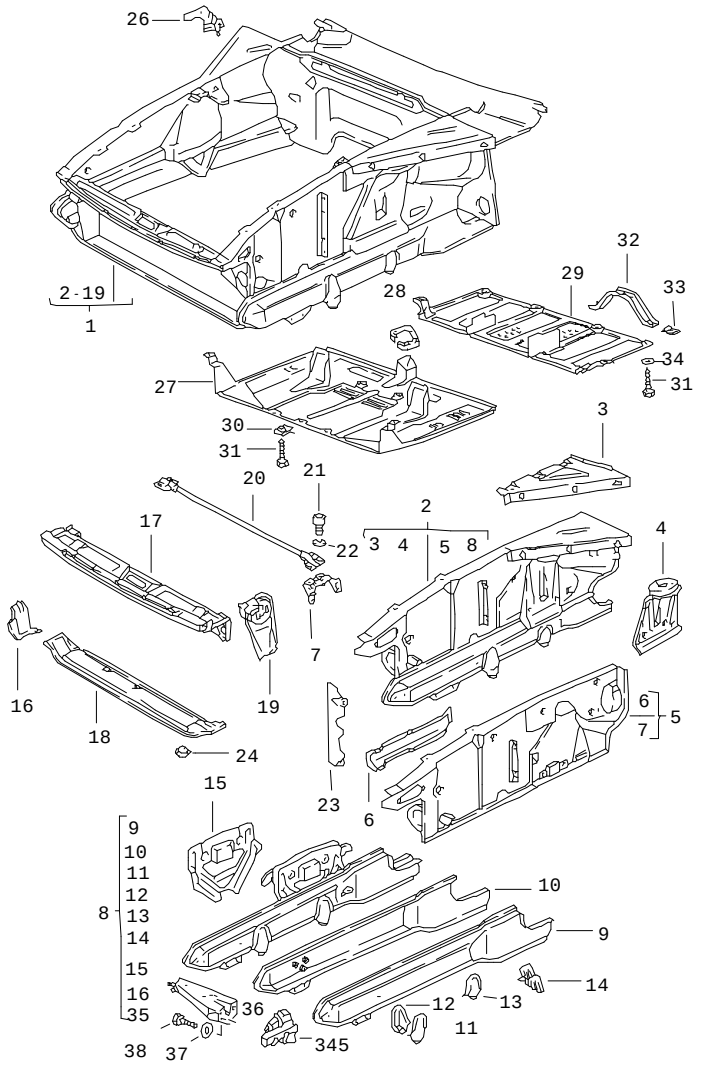

Pos	Part Number	Name	Remarks	Qty	Model
		body front section			
1	A 928 501 011 05	body front section	/LL -89	1	M 481
(1)	A 928 501 011 06	body front section	/LL 90	1	M 481
(1)	A 928 501 011 10	body front section	/LL 91	1	M 481
(1)	A 928 501 011 11	body front section airbag	/LL 91	1	M 481
(1)	A 928 501 011 12	body front section	/LL 91	1	M249
(1)	A 928 501 011 13	body front section airbag	/LL 91	1	M 249
(1)	A 928 501 011 55	body front section	/LL -89	1	M 249
(1)	A 928 501 011 08	body front section	/LL 90	1	M 249
(1)	A 927 501 011 05	body front section	/RL -90	1	M 481
(1)	A 927 501 011 06	body front section	/RL 91	1	M 481
(1)	A 927 501 011 07	body front section	/RL 91	1	M 249
(1)	A 927 501 011 55	body front section	/RL -90	1	M 249
(2)	928 501 013 07	wheel housing	/LL/L	1	
(2)	928 501 014 07	wheel housing	/LL/R	1	
(2)	927 501 013 07	wheel housing	/RL/L	1	
(2)	927 501 014 07	wheel housing	/RL/R	1	
3	928 501 081 02	side member	/L	1	
(3)	928 501 082 02	side member	/R	1	
4	928 501 083 03	reinforcement mounting suspension strut mounting	/L	1	
(4)	928 501 084 03	reinforcement mounting suspension strut mounting	/R	1	
(5)	928 501 035 05	wheel housing	/LL/L	1	
(5)	927 501 035 05	wheel housing	/RL/L	1	
(5)	928 501 036 05	wheel housing	/LL/R	1	

Pos	Part Number	Name	Remarks	Qty	Model
(5)	927 501 036 05	wheel housing	/RL/R	1	
6	928 501 121 03	bracket impact absorber	/L	1	
(6)	928 501 122 03	bracket impact absorber	/R	1	
7	928 501 551 03	bearing bracket transverse strut	/L	1	
	GRV	prime coated			
(7)	928 501 582 03	bearing bracket transverse strut	/R	1	
	GRV	prime coated			
(8)	928 501 015 07	bracket	/L	1	
(8)	928 501 016 07	bracket	/R	1	
9	928 501 105 03	bracket outer	/L	1	
(9)	928 501 106 03	bracket outer	/R	1	
10	928 501 103 02	bracket inner	/L	1	
(10)	928 501 104 03	bracket inner	/R	1	
11	928 501 139 02	bracket	/L	1	
(11)	928 501 140 02	bracket	/R	1	
12	928 501 135 02	bracket	/L	1	
(12)	928 501 136 02	bracket	/R	1	
13	928 501 195 02	bracket	/L	1	
(13)	928 501 196 02	bracket	/R	1	
14	928 501 307 02	bracket for stabiliser	/L	1	
(14)	928 501 308 02	bracket for stabiliser	/R	1	
15	928 501 047 02	bracket	/L	1	
(15)	928 501 048 02	bracket	/R	1	
(16)	928 501 039 00	cap	/L	1	
16	928 501 040 00	cap	/R	1	
17	928 501 033 03	terminal piece	/V	1	
18	928 501 031 05	cross member		1	
19	928 501 127 03	bracket for engine pop-up headlight		1	
20	928 504 061 02	transverse strut		1	
21	900 119 053 02	pan-head screw M 10 X 16		4	
22	900 025 008 02	washer A 10,5		4	
23	928 501 811 02	lining for radiator	/L	1	
(23)	928 501 812 03	lining for radiator	/R	1	
24	803 803 583 A	cover		9	
25	928 504 357 02	water drain valve		1	
26	928 501 313 03	retaining bracket for expansion tank	/LL	1	
(26)	927 501 313 02	retaining bracket for expansion tank	/RL	1	
27	928 504 021 02	protective plate	/V	1	
28	928 504 215 00	protective edging		1	
29	928 504 029 02	protective plate	/H	1	
30	999 591 348 02	speed nut B 4,8		9	
31	900 187 018 02	hexagon-head tapping screw B 4,8 X 16		9	

Pos	Part Number	Name	Remarks	Qty	Model
32	928 504 137 02	angle		2	
33	999 591 699 02	speed nut B 4,8		4	
34	N 011 665 3	washer B 5,3		4	
35	928 501 078 00	reinforcement towing lug		1	
36	928 501 596 00	support for fanfare	-89	1	
(36)	928 501 596 01	support for fanfare	90-	1	
37	N 011 666 7	washer B 6,4		3	
38	900 075 291 02	screw M 6 X 16		3	
		- -- E N D -- -			

Pos	Part Number	Name	Remarks	Qty	Model

Model	Year	MG	SG	Illustration	Restrictions	Update	15:47	02.09.2004	PORSCHE	PET	PORSCHE
928	91	8	01	801-10		179					

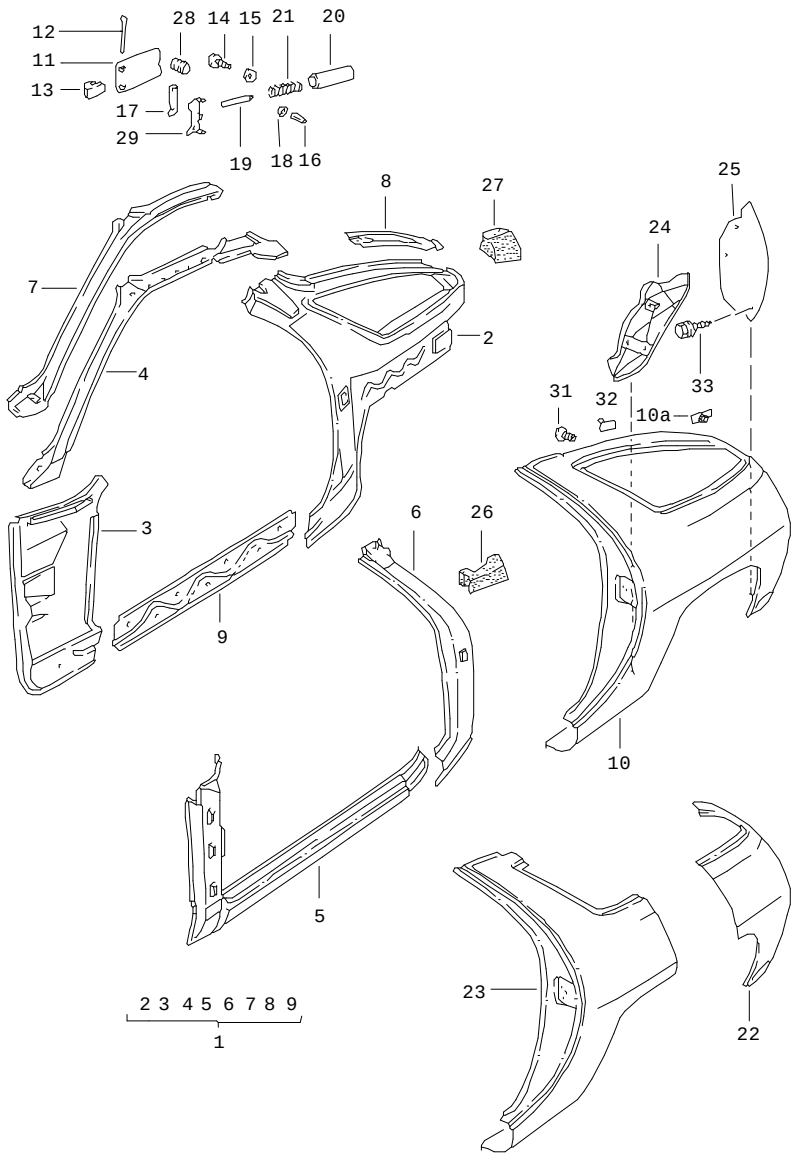

Pos	Part Number	Name	Remarks	Qty	Model
		frame side section			
1	A 928 502 011 13	side section left	/LL 87	1	
1	A 928 502 011 14	side section left	/LL 88	1	
(1)	A 928 502 011 16	side section left	/LL 89	1	
(1)	A 928 502 011 15	side section left	/LL 90-	1	
(1)	A 928 502 011 68	side section left	/LL 87	1	M 650
(1)	A 928 502 011 69	side section left	/LL 88	1	M 650
(1)	A 928 502 011 17	side section left	/LL 89	1	M 650
(1)	A 928 502 011 70	side section left	/LL 90-	1	M 650
(1)	A 927 502 011 05	side section left	/RL 87	1	
(1)	A 927 502 011 06	side section left	/RL88-89	1	
(1)	A 927 502 011 07	side section left	/RL 90-	1	
(1)	A 927 502 011 16	side section left	/RL 90-	1	(AUS)
(1)	A 927 502 011 63	side section left	/RL 87	1	M 650
(1)	A 927 502 011 64	side section left	/RL88-89	1	M 650
(1)	A 927 502 011 65	side section left	/RL 90-	1	M 650
(1)	A 927 502 011 17	side section left	/RL 90-	1	M 650(AUS)
(1)	A 928 502 012 13	side section right	/LL87-89	1	

Pos	Part Number	Name	Remarks	Qty	Model
(1)	A 928 502 012 14	side section right	/LL 90-	1	
(1)	A 928 502 012 68	side section right	/LL87-89	1	M 650
(1)	A 928 502 012 15	side section right	/LL 90-	1	M 650
(1)	A 927 502 012 05	side section right	/RL -88	1	
(1)	A 927 502 012 08	side section right	/RL 89	1	
(1)	A 927 502 012 10	side section right	/RL 90-	1	
(1)	A 927 502 012 16	side section right	/RL 90-	1	(AUS)
(1)	A 927 502 012 63	side section right	/RL -88	1	M 650
(1)	A 927 502 012 09	side section right	/RL 89	1	M 650
(1)	A 927 502 012 06	side section right	/RL 89	1	M 538
(1)	A 927 502 012 07	side section right	/RL 89	1	M 538/M 650
(1)	A 927 502 012 11	side section right	/RL 90-	1	M 650
(1)	A 927 502 012 17	side section right	/RL 90-	1	M 650(AUS)
(2)	928 502 043 05	side section inner rear	/L -89	1	
(2)	928 502 043 06	side section inner rear	/L 90-	1	
(2)	927 502 043 03	side section inner rear	/RL/L90-	1	(AUS)
(2)	928 502 044 05	side section inner rear	/R -89	1	
(2)	928 502 044 06	side section inner rear	/R 90-	1	
(2)	927 502 044 02	side section inner rear	/RL/R90-	1	(AUS)
3	928 502 013 09	side section inner front	/LL/L87	1	
3	928 502 013 10	side section inner front	/LL/L88	1	
(3)	928 502 013 11	side section inner front	/LL/L89-	1	
(3)	928 502 014 09	side section inner front	/LL/R-89	1	
(3)	928 502 014 12	side section inner front	/LL/R90-	1	
(3)	927 502 013 10	side section inner front	/RL/L87	1	
(3)	927 502 013 11	side section inner front	/RL/L88-	1	
(3)	927 502 014 10	side section inner front	/RL/R-88	1	
(3)	927 502 014 11	side section inner front	/RL/R89-	1	
(3)	927 502 014 11	side section inner front	/RL/R 89-90	1	M 538
(3)	927 502 014 11	side section inner front	/RL/R91	1	
4	928 502 301 02	roof frame lateral	/L	1	
(4)	928 502 302 02	roof frame lateral	/R	1	
(5)	928 502 015 03	door sill	/L	1	
(5)	928 502 016 03	door sill	/R	1	
6	928 502 051 02	lock pillar	/L	1	
(6)	928 502 052 02	lock pillar	/R	1	
7	928 502 331 02	roof frame lateral upper	/L	1	

Pos	Part Number	Name	Remarks	Qty	Model
(7)	928 502 332 02	roof frame lateral upper	/R	1	
8	928 502 033 02	interior frame	/L	1	
(8)	928 502 034 02	interior frame	/R	1	
9	928 502 111 02	separator		2	
(10)	928 503 061 16	side section	/L -89	1	
(10)	928 503 061 18	side section	/L -89	1	M 637/M 639
(10)	928 503 061 18	side section	/L 90-	1	
(10)	928 503 062 16	side section	/R -89	1	
(10)	928 503 062 18	side section	/R -89	1	M 637/M 639
(10)	928 503 062 18	side section	/R 90-	1	
10A	928 512 591 02	threaded plate it is necessary to rework	-88	2	M 471
11	928 504 301 02	flap		1	
12	928 504 313 02	axle		1	
13	928 504 326 02	stop		1	
14	900 146 109 00	oval-head screw M 5 X 12		2	
15	N 011 665 11	washer B 5,3		2	
16	900 095 036 02	tensioning sleeve 2 X 8		1	
17	928 504 335 02	desk pad		1	
18	928 504 347 02	washer		1	
19	928 504 341 02	guiding rod		1	
20	928 504 343 02	protective tube		1	
21	928 504 345 02	compression spring		1	
22	928 503 911 08	sub-part wing rear	/L -89	1	
22	928 503 912 08	sub-part wing rear	/R -89	1	
23	928 503 913 04	sub-part wing front	/L -89	1	
(23)	928 503 914 04	sub-part wing front	/R -89	1	
24	928 504 303 02	wheel cover	/L -89	1	
(24)	928 504 303 03	wheel-housing liner	/L 90-	1	
(24)	928 504 304 02	wheel cover	/R -89	1	
(24)	928 504 304 03	wheel-housing liner	/R 90-	1	
25	928 504 309 03	wheel cover	/L 90	1	
(25)	928 504 309 04	wheel cover	/L 90	1	M 221
26	928 504 281 02	seal	/L -89	1	
(26)	928 504 281 03	seal	/L 90-	1	
(26)	928 504 282 02	seal lock pillar	/R	1	
27	928 504 283 02	seal	/L/H 87-	1	
(27)	928 504 284 02	seal	/R/H 87-	1	
28	999 703 135 40	rubber buffer		1	
29	928 504 325 02	hinge half		1	
31	999 015 005 07	half-round screw		4	
32	928 503 621 02	pneumatic spring mount		2	
33	900 187 115 02	screw B 5,5 X 16		10	

- -- E N D -- -

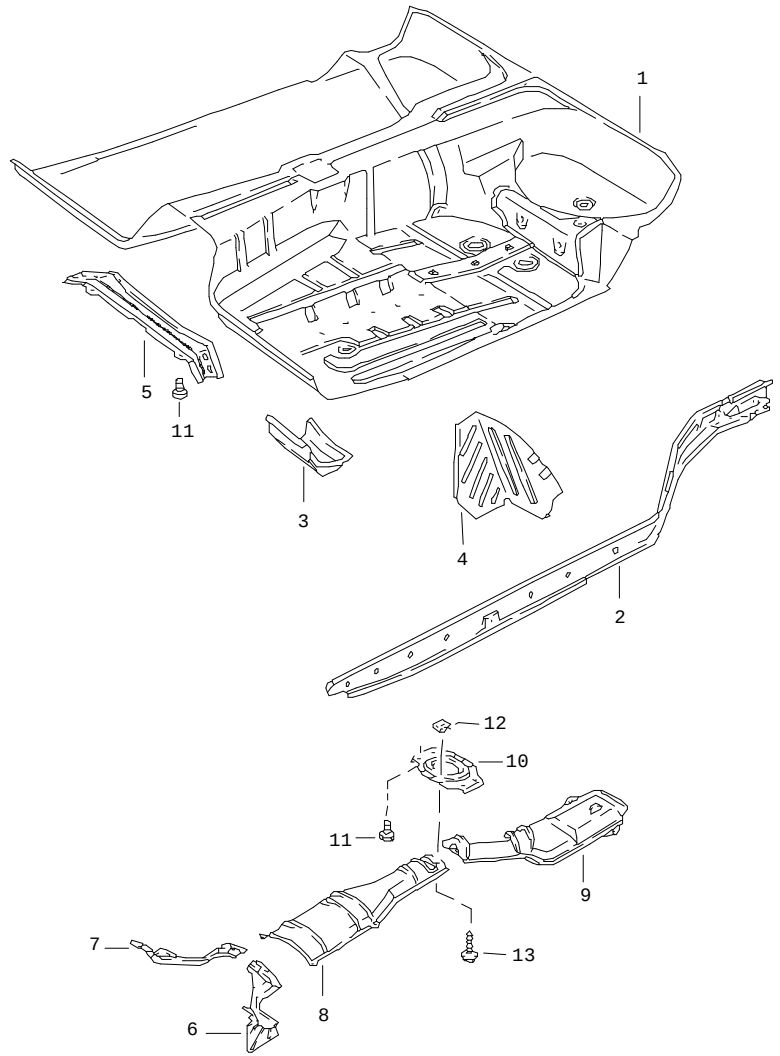

Pos	Part Number	Name	Remarks	Qty	Model
		floor section frame centre			
1	928 501 953 04	floor section	/LL/L-89	1	
(1)	928 501 954 04	floor section	/LL/R-89	1	
(1)	927 501 953 04	floor section	/RL/L-89	1	
(1)	927 501 954 04	floor section	/RL/R-89	1	
(1)	U 928 501 051 14	floor section complete	/LL 90	1	M 481
(1)	U 928 501 051 20	floor section complete	/LL 91	1	M 481
(1)	U 928 501 051 63	floor section complete	/LL 90	1	M 249
(1)	U 928 501 051 21	floor section complete	/LL 91	1	M 249
(1)	U 927 501 051 10	floor section complete	/RL 90	1	M 481
(1)	U 927 501 051 11	floor section complete	/RL 91	1	M 481
(1)	U 927 501 051 56	floor section complete	/RL 90	1	M 249
(1)	U 927 501 051 12	floor section complete	/RL 91	1	M 249
(1)	928 501 053 08	floor section	/LL/L90-	1	
(1)	928 501 054 09	floor section	/LL/R90-	1	
(1)	927 501 053 07	floor section	/RL/L90-	1	
(1)	927 501 054 08	floor section	/RL/R90-	1	
2	928 501 021 04	side member	/LL/L	1	
(2)	928 501 022 05	side member	/LL/R	1	
(2)	927 501 021 05	side member	/RL/L	1	
(2)	927 501 022 04	bracket	/RL/R	1	
3	928 501 093 03	gusset plate	/L	1	

Pos	Part Number	Name	Remarks	Qty	Model
(3)	928 501 094 03	gusset plate	/R	1	
4	928 551 071 02	foot support	/LL/L-89	1	
(4)	928 504 071 02	foot support	/LL/L90-	1	
(4)	927 551 071 02	foot support	/RL/R	1	
5	928 501 901 05	cross member		1	
6	928 504 921 05	heat protection plate		1	
6A	928 504 825 02	support for heat protection plate		1	
7	928 504 924 05	heat protection plate		1	
8	928 504 091 00	heat protection plate		1	
(8)	928 504 091 01	heat protection plate		1	(J)
9	928 504 931 04	heat protection plate	/L	1	
(9)	928 504 932 04	heat protection plate	/R	1	
10	928 501 495 02	bridge seat belt		1	
11	999 075 032 02	hexagon-head bolt M 8 X 20		4	
12	999 591 487 02	speed nut B 5,5		16	
13	900 187 115 02	screw B 5,5 X 16		16	
		- -- E N D -- -			

Model	Year	MG	SG	Illustration	Restrictions	Update	15:48	02.09.2004	PORSCHE	PET	PORSCHE
928	91	8	01	801-20		179					

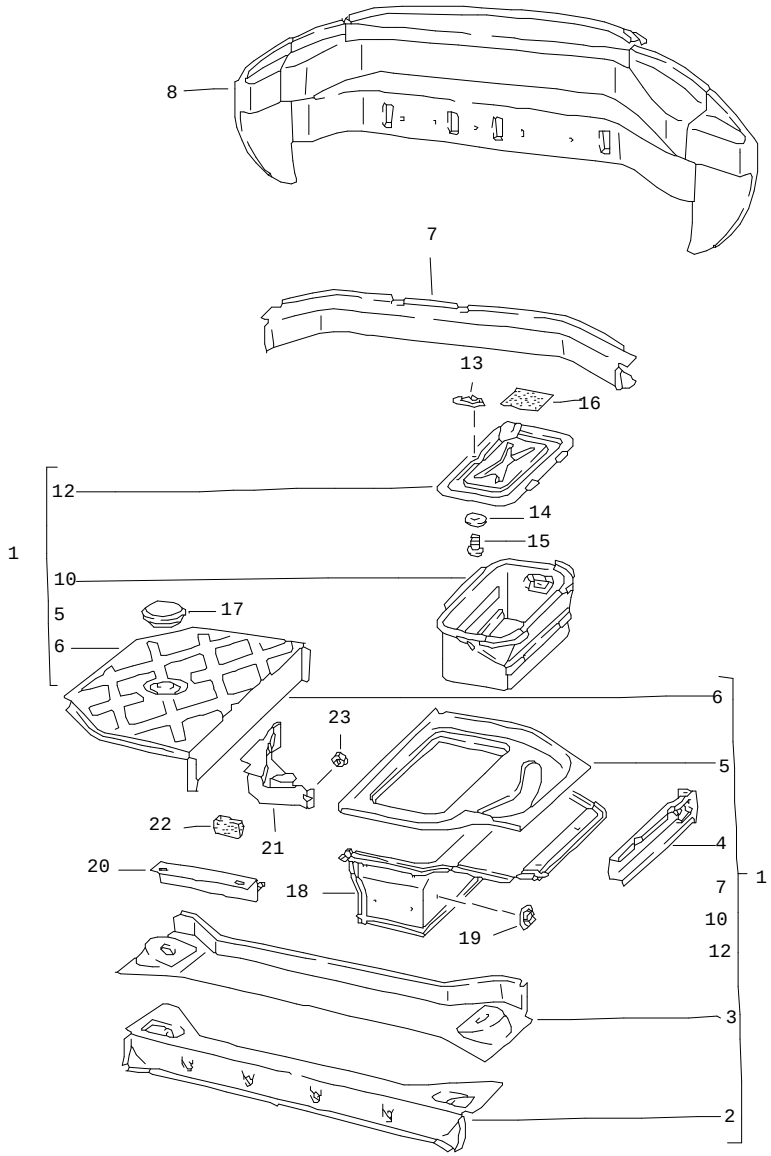

Pos	Part Number	Name	Remarks	Qty	Model
		frame rear rear end			
(1)	928 501 071 05	rear end	-89	1	
(1)	928 501 071 06	rear end	90-	1	
	GRV	prime coated			
2	928 501 515 03	cross member lower half 2,4,5		1	
(3)	928 501 715 03	cross member		1	
4	928 501 207 02	extension bracket	/L	1	
(4)	928 501 208 04	extension bracket	/R	1	
(5)	928 501 701 04	floor section	/L	1	
(6)	928 501 702 03	floor section	/R	1	
7	928 501 079 04	cross member		1	
8	928 502 081 06	terminal piece order also: threaded bolt 999.190.327.30	/LL	1 2	
8	927 502 081 06	terminal piece order also: threaded bolt 999.190.327.30	/RL	1 2	
(10)	928 501 805 04	battery box		1	
(11)	928 501 075 05	floor section	/H -89	1	
(11)	928 501 075 06	floor section	90-	1	
12	928 504 011 04	cover		1	
13	928 504 103 02	latch		1	
14	N 011 665 3	washer B 5,3		1	
15	N 013 973 4	tapping screw B 5,5 X 13		1	

Pos	Part Number	Name	Remarks	Qty	Model
16	911 201 259 00	desk pad for emergency wheel		4	
17	928 504 207 02	cover		1	
18	928 504 053 00	heat protection plate		1	
19	999 591 736 02	speed nut		10	
(18)	928 504 501 01	heat protection plate	90-	1	
20	928 504 407 00	angle	90-	1	
-	999 591 865 02	nut	90-	2	
-	999 591 736 02	speed nut	90-	8	
-	900 151 027 02	washer	90-	2	
-	N 021 196 1	lock nut	90-	2	
21	928 612 541 00	cover		1	
22	928 612 494 00	piece of plastic foam		1	
23	999 591 839 40	hexagon nut		1	
		- -- E N D -- -			

Pos	Part Number	Name	Remarks	Qty	Model

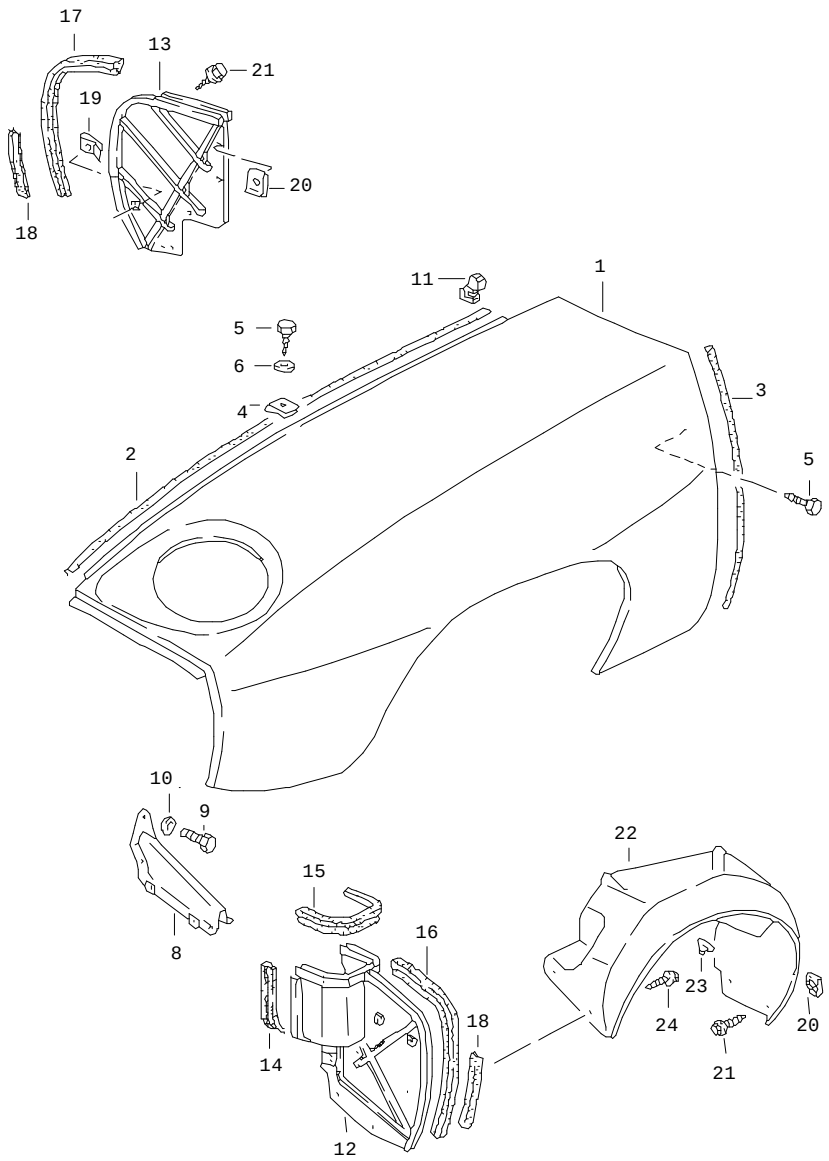

Pos	Part Number	Name	Remarks	Qty	Model
		wing			
1	928 503 011 08	wing	/L -89	1	
1	928 503 012 08	wing	/R -89	1	
1	928 503 011 10	wing	/L -89	1	M 637/M 639
1	928 503 012 10	wing	/R -89	1	M 637/M 639
1	928 503 011 10	wing	/L 90-	1	
1	928 503 012 10	wing	/R 90-	1	
2	000 043 129 00	sealing strap		2	
3	000 043 129 00	sealing strap		*	
4	999 507 003 02	speed nut		26	
5	999 450 007 02	screw		24	
6	999 704 157 40	washer 5,5 X 18 X 1,5		24	
8	928 503 031 04	wing strut		2	
9	999 072 005 09	hexagon-head bolt M 6 X 12		10	
10	N 012 226 5	spring washer		10	
11	928 511 579 03	seal		2	
12	928 504 221 11	cover	/L	1	
13	928 504 222 11	cover	/R	1	
14	928 504 223 04	sealing strap	/L	1	
15	928 504 223 05	sealing strap	/L	1	
16	928 504 223 07	sealing strap	/L	1	
17	928 504 223 08	sealing strap	/L	1	
18	928 504 223 09	sealing strap		2	
19	999 507 048 03	speed nut M 6		2	
20	999 591 487 02	speed nut B 5,5		15	

Pos	Part Number	Name	Remarks	Qty	Model
21	900 187 115 02	screw B 5,5 X 16		15	
22	928 504 381 05	wheel-housing liner	/L -89	1	
(22)	928 504 382 05	wheel-housing liner	/R -89	1	
(22)	928 504 381 05	wheel-housing liner	/L -89	1	M 637/M 639
(22)	928 504 382 05	wheel-housing liner	/R -89	1	M 637/M 639
(22)	928 504 381 05	wheel-housing liner	/L 90-	1	
(22)	928 504 382 05	wheel-housing liner	/R 90-	1	
23	999 049 022 40	plastic nut		2	
24	900 187 108 02	tapping screw BZ 6,3 X 16		4	
		- -- E N D -- -			

Pos	Part Number	Name	Remarks	Qty	Model

Model	Year	MG	SG	Illustration	Restrictions	Update				
928	91	8	01	801-30		179	15:48	02.09.2004	PORSCHE	PET	PORSCHE

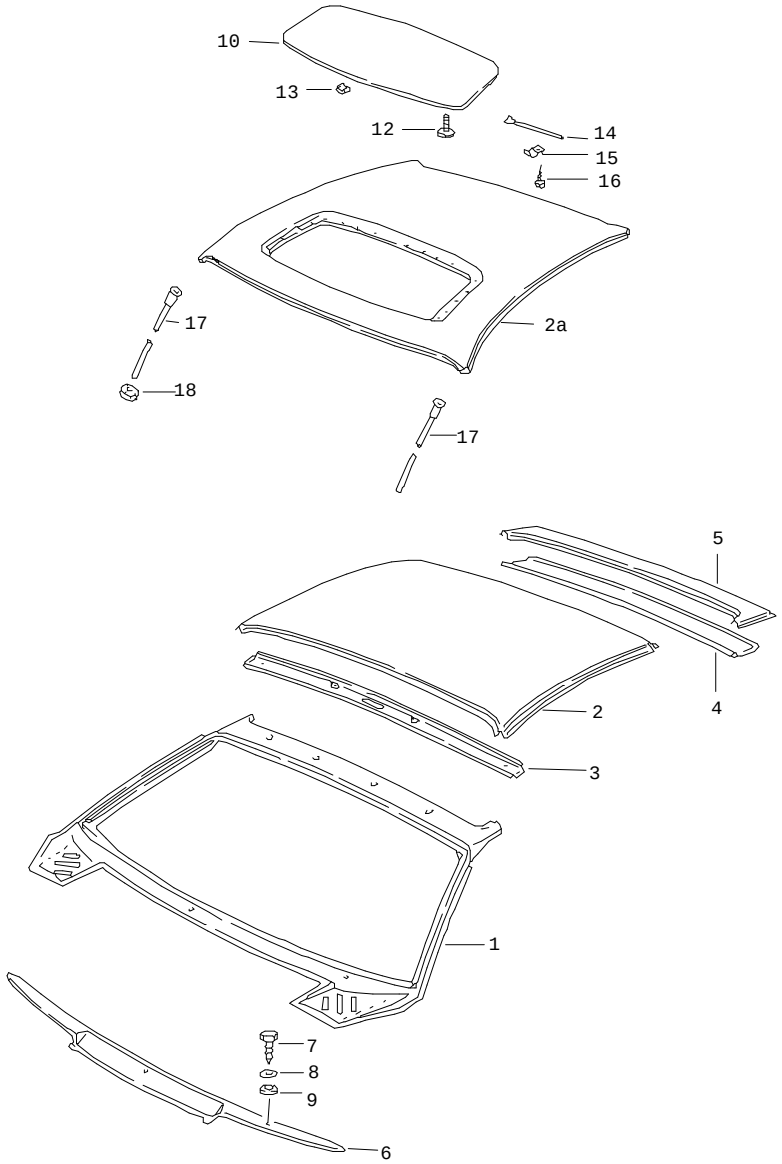

Pos	Part Number	Name	Remarks	Qty	Model
		roof cowl			
1	928 503 041 08	cowl	/LL	1	
(1)	927 503 041 04	cowl	/RL	1	
2	928 503 501 02	roof	-89	1	
(2)	928 503 501 03	outer roof panel	90-	1	
2A	928 503 027 60	roof	-88	1	M 650
2A	928 503 027 61	outer roof panel	89-	1	M 650
3	928 502 383 02	roof frame	/V	1	
4	928 502 393 02	roof frame lower	/H	1	
5	928 502 395 02	roof frame upper	/H	1	
6	928 559 117 02	cowl panel outer part	/LL	1	
(6)	927 559 117 02	cowl panel	/RL	1	
-	928 559 251 02	gasket cowl panel 1600 MM		1	
7	900 187 010 02	tapping screw BZ 6,3 X 19		2	
8	900 151 003 02	washer A 6,4		2	
9	999 704 157 40	washer		2	
10	928 564 033 41	cover		1	
12	900 072 003 02	adjusting screw M 5 X 12		2	
13	999 591 898 02	clamp	-90	18	
13	999 591 898 02	clamp	91	18	
14	928 564 081 02	spring		1	
15	928 564 379 02	clamping piece		1	

Pos	Part Number	Name	Remarks	Qty	Model	Pos	Part Number	Name	Remarks	Qty	Model
16	N 013 970 5	tapping screw B 4,8 X 9,5		1							
17	928 564 413 02	water drain hose		2							
18	021 119 569 A	rubber sleeve		2							
		- -- E N D -- -									

Model	Year	MG	SG	Illustration	Restrictions	Update	15:49	02.09.2004	PORSCHE	PET	PORSCHE
928	91	8	02	802-00		179					

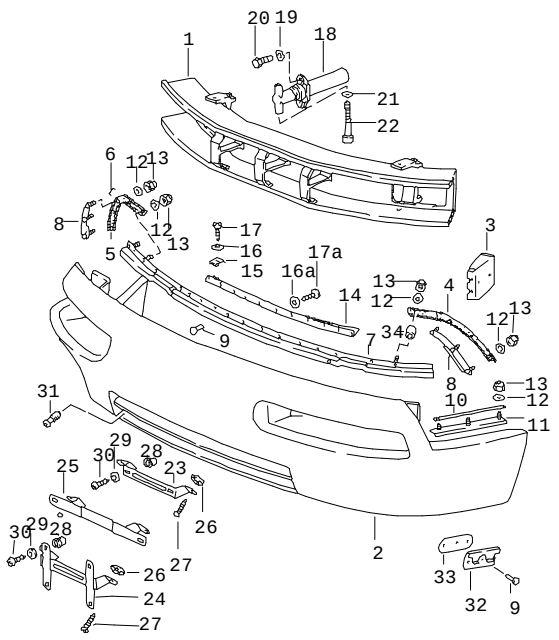

Pos	Part Number	Name	Remarks	Qty	Model
		bumper front			
1	928 505 010 20	bracket		1	
(1)	928 505 010 21	bracket		1	M 215
(2)	928 505 113 20	lining		1	
3	928 505 047 21	support	87	2	M 215
3	928 505 047 21	support	88-	2	M 215
(4)	928 505 051 00	piping	/L -89	1	
	70B	black			
(4)	928 505 051 01	piping		1	
	70B	black			
(4)	928 505 143 03	piping	/L 90-	1	
	01C	satin black			
(5)	928 505 052 00	piping	/R -89	1	
	70B	black			
(5)	928 505 052 01	piping	/R 91-	1	
	70B	black			
(5)	928 505 143 03	piping	/R 90-	1	
	01C	satin black			
-	928 505 191 00	cap		2	
6	999 591 539 07	clamp		X	
7	928 505 031 20	retaining strip upper		2	
8	928 505 033 20	retaining strip	/L	1	
(8)	928 505 034 20	retaining strip	/R	1	
9	A 999 190 104 30	blind rivet	-90	20	
(9)	999 190 114 30	rivet	90	20	
(9)	999 190 114 30	rivet	91-	31	

Pos	Part Number	Name	Remarks	Qty	Model
10	000 043 101 00	sealing cord		1	
11	928 505 049 00	attachment strip		2	
12	N 011 665 3	washer B 5,3		12	
13	N 021 196 1	lock nut M 5		16	
14	928 505 114 20	rail		1	
15	999 591 485 02	speed nut B 4,8		5	
16	900 025 003 02	washer A 5,3		5	
16A	900 025 044 07	washer A 4,3		6	
17	900 143 147 07	tapping screw B 4,8 X 16	-90	5	
(17)	900 143 147 07	tapping screw B 4,8X16	91-	11	
17A	900 143 113 07	tapping screw B 4,2 X 13		6	
18	993 505 019 00	impact pipe		2	
(18)	928 505 015 22	impact absorber		2	M 058/M 215
19	900 025 007 02	washer 8,4		4	
20	900 075 339 08	hexagon-head bolt M 8 X 30	-90	4	
(20)	999 062 009 02	stud M 8 X 28	91-	4	
21	900 025 009 02	washer A 13		2	
22	900 067 084 02	pan-head screw M 12 X 110		2	
23	928 701 121 04	support for number plate		1	
25	928 701 050 05	support for number plate		1	
26	914 571 903 10	sealing ring		2	
27	N 014 000 2	tapping screw B 4,8 X 19		2	
28	999 591 498 40	special nut		2	
29	N 011 522 8	washer		2	
30	900 143 134 00	tapping screw		2	
31	928 722 107 01	cap towing lug front		1	
32	999 591 861 02	clamp for front spoiler		6	
33	999 591 862 02	desk pad		6	
34	928 505 511 04	sleeve	90-	2	
		- -- E N D -- -			

Model	Year	MG	SG	Illustration	Restrictions	Update				
928	91	8	02	802-05		179	15:49	02.09.2004	PORSCHE	PET	PORSCHE

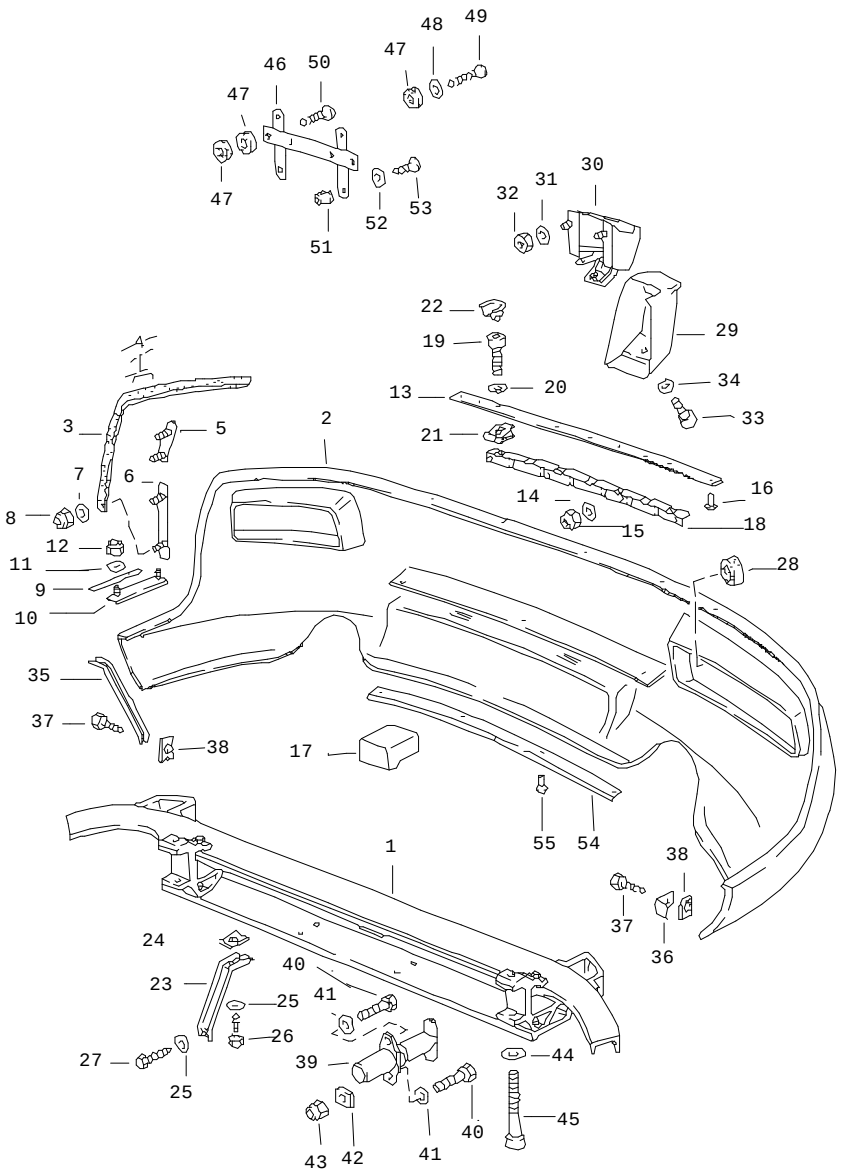

Pos	Part Number	Name	Remarks	Qty	Model
		bumper rear			
1	928 505 020 20	bracket		1	
(1)	928 505 020 21	bracket		1	M 215
2	928 505 123 20	lining		1	
(2)	928 505 123 21	lining		1	M 215
-	928 505 657 00	cap		1	
	G2X	prime coated for towing lug			
(3)	A 928 505 145 20	piping	/L	1	
3	A 928 505 146 20	piping	/R	1	
(3)	928 799 505 53	piping	-89	2	
	70B	black			
(3)	928 505 145 03	piping	90-	2	
	01C	black order also:			
-	928 505 191 00	cap		1	
4	999 591 539 07	clamp		X	
(5)	928 505 035 20	retaining strip upper	/L	1	
5	928 505 036 20	retaining strip upper	/R	1	
(6)	928 505 037 20	retaining strip lower	/L	1	
6	928 505 038 20	retaining strip lower	/R	1	
-	928 505 511 04	sleeve	90-	2	
7	N 011 665 3	washer B 5,3		8	
8	900 910 009 02	lock nut M 5		8	

Pos	Part Number	Name	Remarks	Qty	Model
9	000 043 101 00	sealing cord		X	
10	928 505 043 00	attachment strip		2	
11	N 011 665 3	washer B 5,3		4	
12	900 910 009 02	lock nut M 5		4	
13	928 505 447 00	reinforcement strip		1	
14	N 011 665 3	washer B 5,3		4	
15	900 910 009 02	lock nut M 5		4	
16	A 999 190 104 30	blind rivet	-90	X	
17	928 505 245 20	buffer		2	
18	928 505 273 02	retaining strip		1	
19	N 044 728 1	pan-head screw M 5 X 20		4	
20	N 011 665 3	washer B 5,3		4	
21	999 507 330 02	nut lock M 5		4	
22	928 505 389 00	cap		4	
23	928 505 279 02	rear support		2	
24	N 902 689 01	speed nut B 4,2		2	
25	900 025 002 02	washer A 4,3		4	
26	N 043 884 1	tapping screw B 4,2 X 13		2	
27	N 043 890 1	tapping screw B 4,2 X 9,5		2	
28	999 703 066 50	grommet	-89	2	
(28)	999 703 066 50	grommet	90-	2	
29	928 505 005 20	buffer	/L	1	M 215
	01C	black			
(29)	928 505 006 20	buffer	/R	1	M 215
	01C	black			
30	928 505 065 20	mounting piece		2	M 215
31	N 011 525 13	washer A 8,4		6	M 215
32	900 076 025 02	hexagon nut M 8		6	M 215
33	900 067 185 07	pan-head screw M 6 X 12		2	M 215
34	900 031 028 07	washer 6,4		2	M 215
35	928 505 522 02	bracket	/R	1	
36	928 505 523 00	retaining bracket	/L	1	
37	900 187 115 02	screw B 3,5 X 16		2	
38	999 591 487 02	speed nut B 5,5		2	
39	928 505 018 20	impact pipe		2	
(39)	928 505 016 22	impact absorber		2	M 058/M 215
40	900 075 339 08	hexagon-head bolt	-90	4	
(40)	900 075 222 02	screw	91-	4	
41	900 025 007 02	washer 8,4	-90	4	
42	928 505 321 02	desk pad		2	
43	900 910 095 02	lock nut M 8		2	
44	900 025 009 02	washer A 13		2	
45	900 067 084 02	pan-head screw M 12 X 110		2	

Pos	Part Number	Name	Remarks	Qty	Model
(46)	928 701 050 03	support for number plate		1	CH
47	914 571 903 10	sealing ring		2	
48	900 025 003 02	washer A 5,3		2	
49	N 013 971 3	tapping screw B 4,8 X 22		2	
54	928 505 269 02	reinforcement strip		1	
55	999 190 114 30	rivet		X	
		- -- E N D -- -			

Pos	Part Number	Name	Remarks	Qty	Model

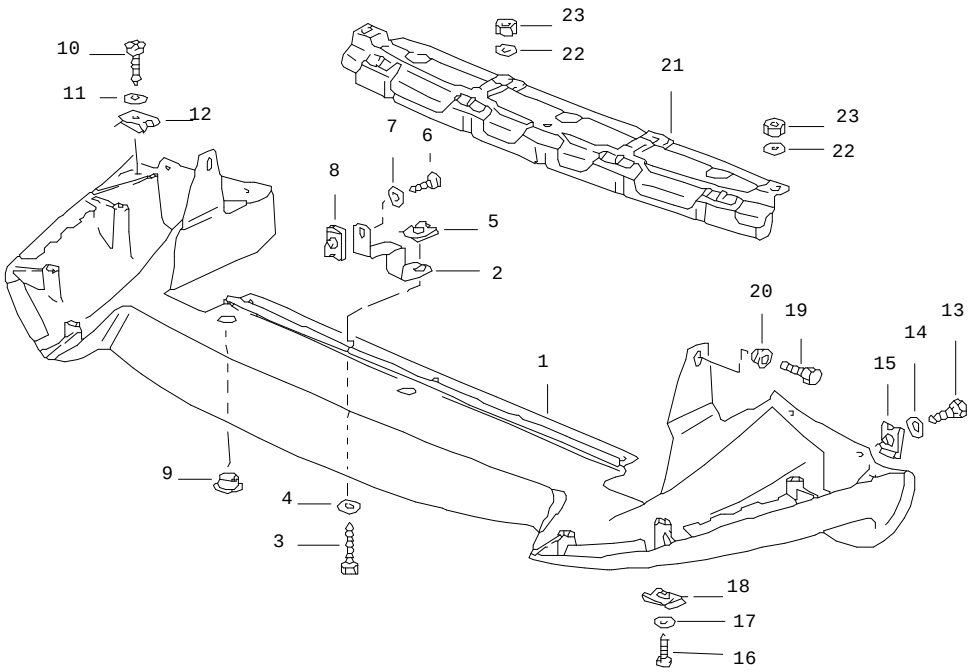

Pos	Part Number	Name	Remarks	Qty	Model
		spoiler front			
1	928 505 071 20	front spoiler	-89	1	
	70B	black			
(1)	928 505 071 21	front spoiler	90-	1	
	70B	black			
2	928 505 289 02	support	-89	3	
3	900 187 121 02	tapping screw B 4,8 X 22		3	
4	N 011 665 3	washer B 5,3	-89	3	
5	999 591 699 02	speed nut B 4,8	-89	3	
6	900 143 147 07	tapping screw B 4,8 X 16	-89	3	
7	N 011 665 3	washer B 5,3	-89	3	
8	999 591 699 02	speed nut B 4,8	-89	3	
9	999 703 343 40	plug F >>92HS8 41176 F >>92HS8 49649		1 (J)	
10	900 143 148 07	tapping screw B 4,8 X 19		2	
11	N 011 665 3	washer B 5,3		2	
12	999 591 699 02	speed nut B 4,8	-89	2	
(12)	999 591 938 02	clamp B 4,8	-90	2	
13	900 187 004 02	hexagon-head tapping screw 4,8 X 19		4	
14	N 011 665 3	washer B 5,3		4	

Pos	Part Number	Name	Remarks	Qty	Model
15	999 591 699 02	speed nut B 4,8		4	
16	900 143 147 07	tapping screw B 4,8 X 16		6	
17	900 025 003 02	washer A 5,3		6 6	
18	999 591 699 02	speed nut B 4,8		6	
19	N 010 215 13	hexagon-head bolt M 6 X 15		2	
20	937 503 255 00	spacer	-89	2	
20	900 151 027 02	washer B 5,3	90-	2	
21	928 505 059 02	bracket front spoiler	-89	1	
21	928 505 059 03	bracket front spoiler	90-	1	
22	N 011 666 6	washer B 6,4		4	
23	900 910 118 00	lock nut M 6		4	
		- -- E N D -- -			

Pos	Part Number	Name	Remarks	Qty	Model

Model	Year	MG	SG	Illustration	Restrictions	Update	15:49	02.09.2004	PORSCHE	PET	PORSCHE
928	91	8	02	802-15		179					

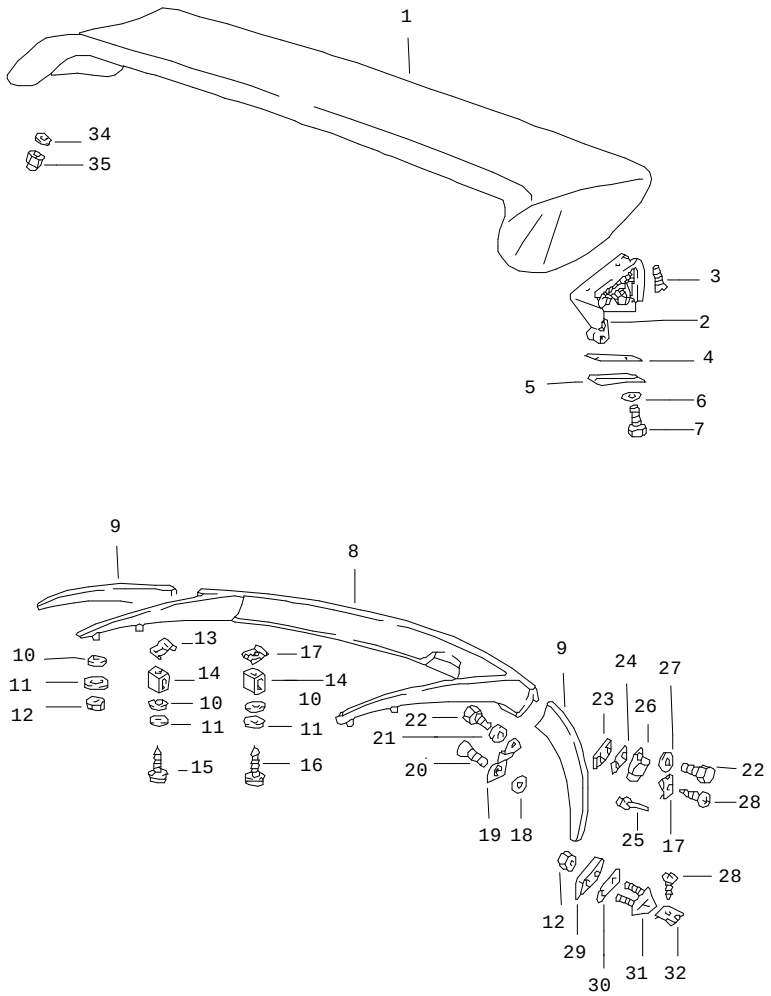

Pos	Part Number	Name	Remarks	Qty	Model
		spoiler rear			
		spoiler collapsible	87	1	
1	928 512 078 04 70C	rear spoiler		1	
2	928 512 111 02	hinge	/L	1	
2	928 512 112 02	hinge	/R	1	
3	900 249 008 02	countersunk-head screw M 6 X 12		4	
4	928 512 223 02	adhesive film	/L	1	
4	928 512 224 02	adhesive film	/R	1	
5	928 512 277 00	desk pad		2	
6	900 151 037 07	washer 6,4		4	
7	999 217 079 07	hexagon-head bolt M 6 X 12		4	
		spoiler fixed	88-	1	
1	928 512 078 03 70C	rear spoiler black		1	
34	900 151 037 07	washer A 6,4		4	
35	900 085 014 07	cap nut M 6		4	
		spoiler integrated		1	M471
8	928 512 071 02	rear spoiler		1	
9	928 512 073 02	rear spoiler	/L	1	
9	928 512 074 02	rear spoiler	/R	1	
10	928 559 143 02	sealing ring		10	

Pos	Part Number	Name	Remarks	Qty	Model
11	999 025 083 70	washer 3,7 X 11 X 0,5		10	
12	900 910 006 02	lock nut M 4		4	
13	928 512 307 02	speed nut		6	
14	928 512 199 02	spacer		12	
15	999 450 004 02	tapping screw B 4,2 X 28		4	
16	999 450 005 02	tapping screw B 4,2 X 32		6	
17	N 015 429 2	speed nut B 4,2		6	
18	928 512 611 02	desk pad		2	
19	928 512 589 02	retaining bracket		2	
20	999 219 003 07	countersunk-head screw M 6 X 16		2	
21	900 151 037 07	washer A 6,4		2	
22	999 217 006 07	hexagon-head bolt M 6 X 10		4	
23	928 512 601 02	threaded plate		2	
24	928 512 613 02	desk pad		2	
25	999 190 151 30	tubular rivet D 4 X 4,8 - 6		2	
26	928 512 595 02	bracket		2	
27	N 011 524 7	washer A 6,4		2	
28	N 013 965 9	oval-head sheetmetal screw BZ 4,2 X 9,5		4	
29	928 512 609 02	wedge		2	
30	928 512 615 02	desk pad		2	
31	928 512 605 02	bracket		2	
32	999 507 229 02	speed nut B 4,2		2	

- -- E N D -- -

Model	Year	MG	SG	Illustration	Restrictions	Update				
928	91	8	03	803-00		179	15:49	02.09.2004	PORSCHE	PET	PORSCHE

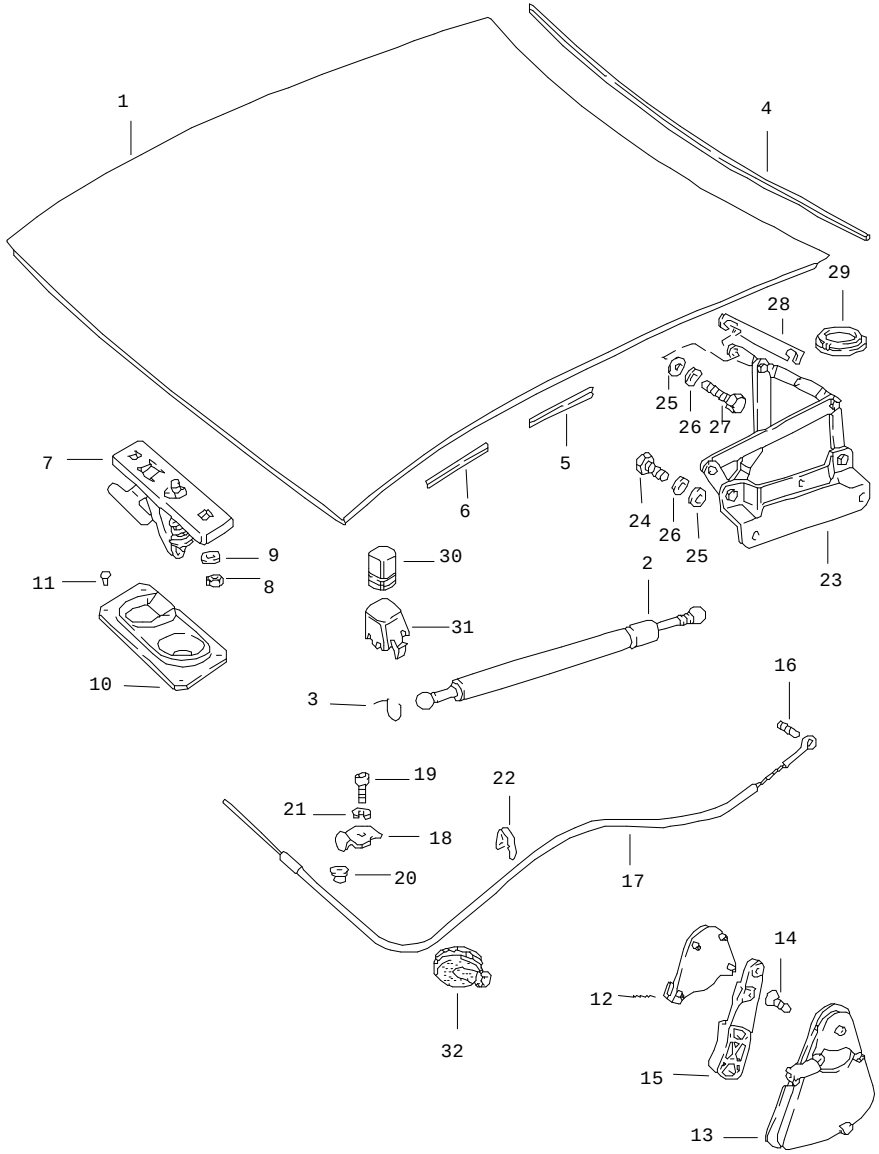

Pos	Part Number	Name	Remarks	Qty	Model
		bonnet installation parts			
1	928 511 005 03	bonnet	-90	1	
(1)	928 511 005 04	bonnet	90-	1	
2	928 511 139 03	gas-filled strut		2	
3	900 169 016 02	clip		4	
4	928 511 141 03	gasket		1	
5	928 504 551 03	gasket lateral	-88	2	
6	928 504 551 03	gasket lateral	-88	2	
(6)	928 504 551 03	gasket lateral	89-	2	
7	928 511 029 03	lid lock upper part		1	
8	900 076 010 02	hexagon nut M 6		2	
9	N 015 404 1	washer 6,4		2	
10	928 511 027 02	lid lock lower part		1	
11	999 190 128 30	blind rivet 4,8 X 7,4		4	
12	928 511 143 02	cover		1	
	70B	black			
13	928 511 173 02	cup		1	
	70B	black			
14	900 249 001 02	countersunk-head screw M 6 X 15		2	
15	928 511 175 02	pull handle		1	
	70B	black			
16	900 197 018 00	roll pin 4 X 12		1	

Pos	Part Number	Name	Remarks	Qty	Model
17	928 511 037 04	wire pull	/LL -89	1	
(17)	927 504 037 00	wire pull	/RL -89	1	
(17)	928 504 037 00	wire pull	/LL 90-	1	
(17)	927 504 037 00	wire pull	/RL 90-	1	
18	928 511 541 02	clamping piece		1	
19	900 067 008 02	pan-head screw M 6 X 12		1	
20	928 511 543 02	sleeve		1	
21	N 012 007 2	lock ring A 6		1	
22	999 513 007 40	tie-wrap		1	
23	928 511 041 04	lid hinge	/L -90	1	
(23)	928 511 041 04	lid hinge	/L 91	1	
(23)	928 511 042 04	lid hinge	/R -90	1	
(23)	928 511 042 04	lid hinge	/R 91	1	
24	N 010 237 6	hexagon-head bolt M 8 X 12		6	
25	900 025 007 02	washer 8,4		10	
27	900 075 309 08	hexagon-head bolt M 8 X 20		4	
28	928 511 419 02	compensating plate		X	
29	928 511 321 03	cap		2	
30	999 703 132 40	rubber buffer		2	
31	928 511 203 02	support		2	
32	111 957 861	grommet		1	
		- -- E N D -- -			

Pos	Part Number	Name	Remarks	Qty	Model

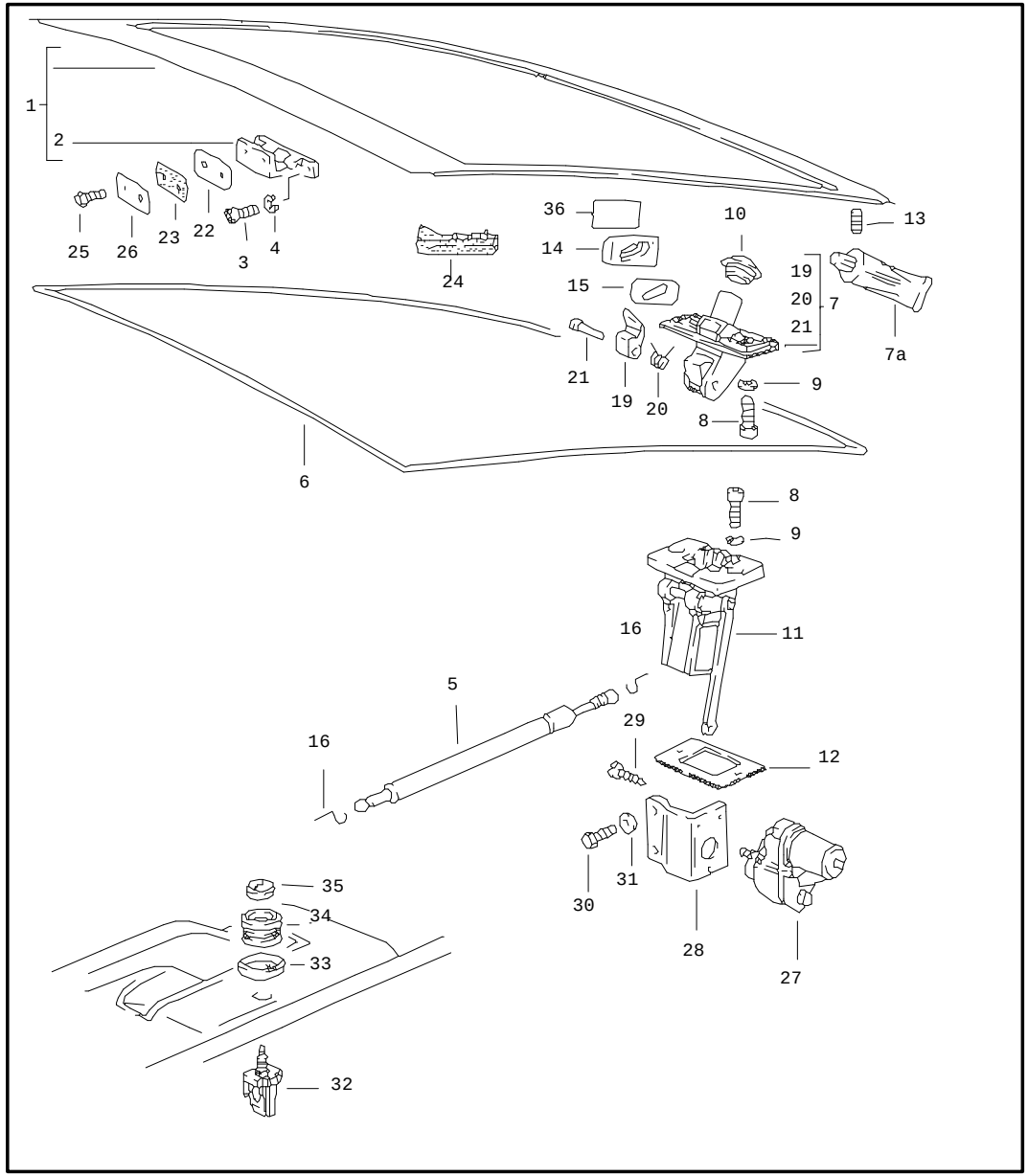

Pos	Part Number	Name	Remarks	Qty	Model
		rear lid installation parts			
		differing parts for cars with alarm system see group 8/04/20			
1	928 512 005 05	rear lid		1	
	GRV	prime coated			
(1)	928 512 005 06	rear lid	88-89	1	M 637
2	928 512 041 04	hinge	-90	2	
(2)	928 512 041 04	hinge	91-	2	
3	999 509 012 02	pan-head screw M 6 X 20		8	
4	N 012 026 3	lock ring A 6		8	
5	928 512 331 05	gas-filled strut		2	
6	928 512 129 04	gasket	-89	1	
(6)	928 512 129 04	gasket	90-	1	
7	928 512 903 02	lid lock upper part w/o stipulated lock number with 1 key		1	
(7)	928 512 901 02	lid lock upper part with stipulated lock-no. with 1 key state lock number		1	
7A	000 043 204 21	grease for lock cylinder		X	
8	N 014 770 3	pan-head screw M 8 X 15		4	
9	999 523 102 02	lock washer		4	
10	928 512 169 02	gasket	87	1	
(10)	928 512 169 03	gasket lock cylinder	88-	1	

Pos	Part Number	Name	Remarks	Qty	Model
11	928 512 055 20	lid lock lower part		1	
12	928 512 179 02	desk pad		X	
(12)	928 512 181 02	desk pad		X	
13	999 703 140 40	rubber buffer		2	
14	928 512 057 02	guide wedge		2	
-	928 512 531 02	adhesive film for guide wedge		2	
15	928 512 263 02	plate		2	
16	900 169 016 02	clip		4	
19	928 512 161 02	latch		1	
20	928 512 163 02	spring		1	
21	928 512 165 02	clinch pin		1	
22	928 512 409 02	desk pad		X	
23	928 512 413 07	gasket		2	
24	928 512 261 02	water deflector	/L	1	
(24)	928 512 262 02	water deflector	/R	1	
25	999 217 017 02	hexagon-head bolt M 8 X 18		4	
26	928 512 417 03	plate		2	
27	928 624 407 02	electric motor		1	
28	928 624 049 00	support		1	
29	N 013 954 2	oval-head sheetmetal screw B 2,9 X 13		3	
30	999 072 005 09	hexagon-head bolt M 6 X 12		2	
31	N 011 524 7	washer A 6,4		2	
32	928 613 114 00	switch rear lid unlocking device rear lid unlocking device	-92	2	
33	A 928 613 431 00	rose driver's side		1	
(33)	928 613 431 00	rose driver's side		1	
	70B	black			
(33)	A 928 613 431 01	rose passenger's side		1	
(33)	928 613 431 01	rose passenger's side	-92	1	
	70B	black			
34	A 928 613 433 00	knob		2	
(34)	928 613 433 00	knob	-92	2	
	70B	black			
35	A 928 613 437 00	cap with symbol		2	
(35)	928 613 437 00	cap with symbol	-92	2	
	70B	black			

- -- E N D -- -

Model	Year	MG	SG	Illustration	Restrictions	Update				
928	91	8	04	804-00		179	15:50	02.09.2004	PORSCHE	PET	PORSCHE

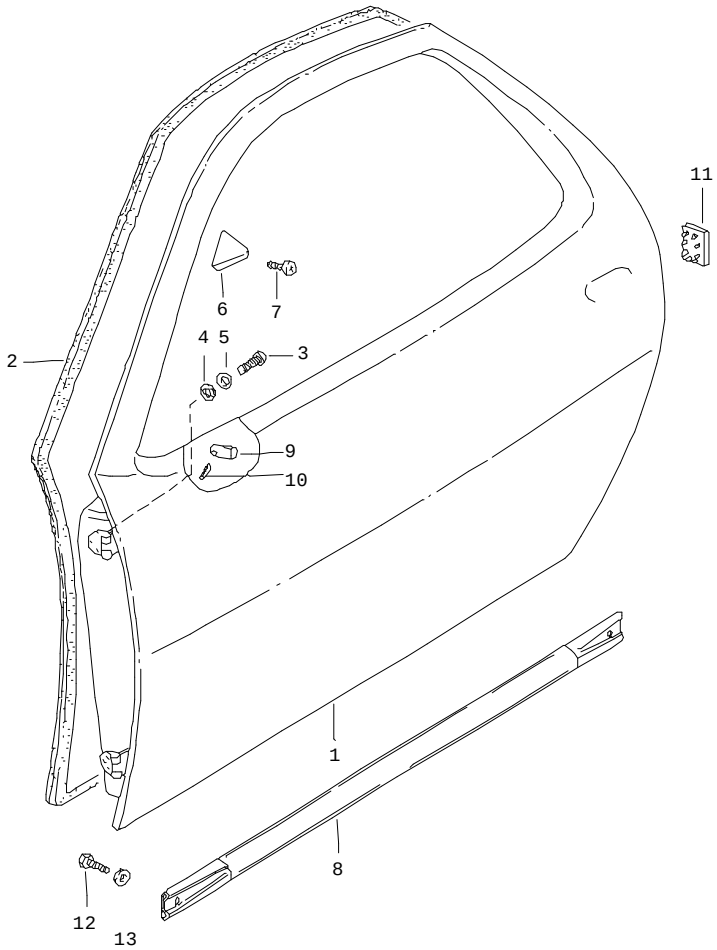

Pos	Part Number	Name	Remarks	Qty	Model
		door in white			
(1)	928 531 005 10	door in white prepared for mirror	/L	1	
	GRV	prime coated			
(1)	928 531 006 10	door in white not prepared for mirror	/R	1	
	GRV	prime coated			
(1)	927 531 005 10	door in white not prepared for mirror	/RL/L	1	
	GRV	prime coated			
(1)	927 531 006 10	driver's door prepared for mirror	/R	1	
	GRV	prime coated			
2	928 537 345 03	door seal	/L -90	1	
2	928 537 345 05	door seal	/L 91	1	
(2)	928 537 346 03	door seal	/R -90	1	
(2)	928 537 346 05	door seal	/R 91	1	
3	N 014 770 3	pan-head screw M 8 X 16		12	
4	900 025 007 02	washer A 8,4		12	
5	999 523 102 02	lock washer 8		12	
6	928 537 341 02	thrust wedge	/L	1	
(6)	928 537 342 02	thrust wedge	/R	1	
7	900 144 008 02	counters. head tapp. screw B 3,5 X 9,5		2	
8	928 531 601 03	reinforcement reinforcement		2	
9	928 531 235 03	threaded piece		1	
10	N 013 295 1	tensioning sleeve 3 X 12		1	

Pos	Part Number	Name	Remarks	Qty	Model	Pos	Part Number	Name	Remarks	Qty	Model
11	928 537 723 02	plug		2							
12	900 075 085 02	hexagon-head bolt M 8 X 20		4							
13	N 012 009 3	lock ring A 8		4							
		- -- E N D -- -									

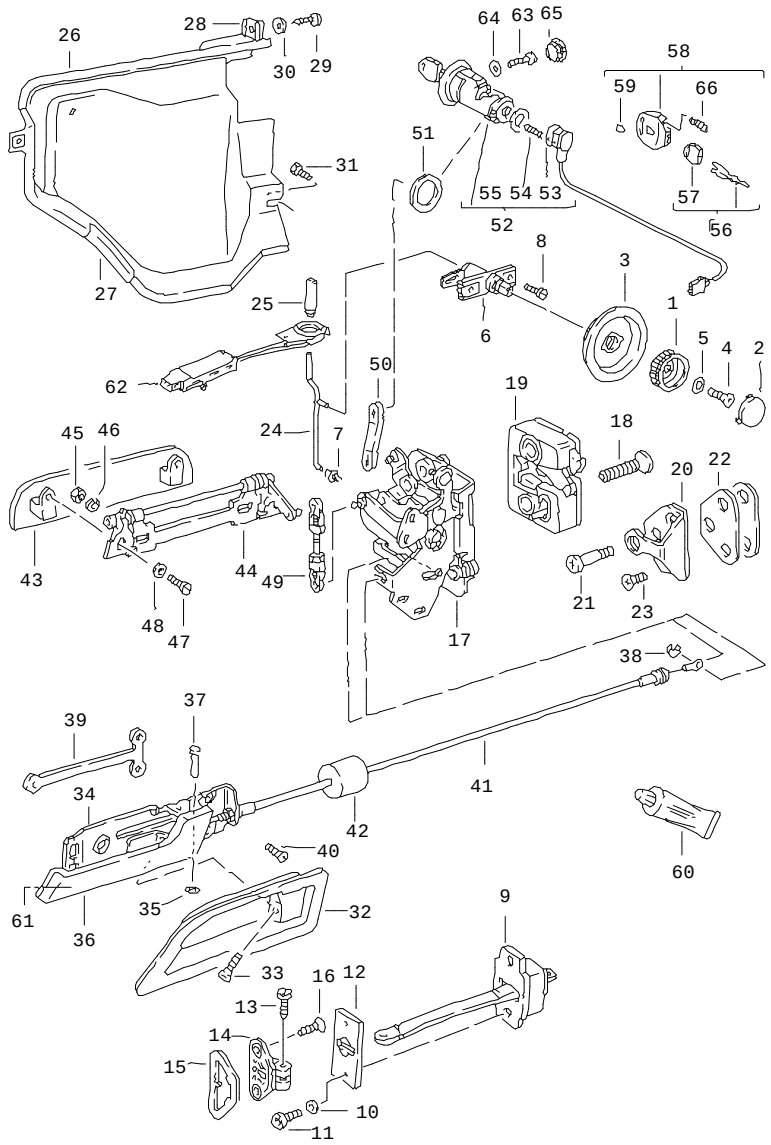

Pos	Part Number	Name	Remarks	Qty	Model
		installation parts for door			
		differing parts for cars with alarm system see group 8/04/20			
1	928 537 581 03	rotary knob		2	
2	911 531 703 00	cap		2	
3	928 537 585 02	bearing shell		2	
4	999 218 010 02	oval-head screw M 5 X 12		2	
5	N 011 665 3	washer B 5,3		2	
6	928 537 096 02	bearing		2	
7	993 531 563 00	linkage clip		2	
8	N 013 968 7	tapping screw B 4,8 X 13		4	
9	928 537 033 04	door support		2	
10	N 011 524 7	washer A 6,4		4	
11	928 537 451 02	pan-head screw		4	
12	928 537 371 02	desk pad		2	
13	928 537 419 03	pan-head screw		2	
14	928 537 417 02	bearing bracket	/L	1	
(14)	928 537 418 02	bearing bracket	/R	1	
15	928 537 425 02	desk pad	/L	1	
(15)	928 537 426 02	desk pad	/R	1	
16	928 537 459 02	oval-head screw M 6 X 25		4	
17	928 537 907 03	lock inner part	/L -88	1	

Pos	Part Number	Name	Remarks	Qty	Model
(17)	927 537 908 03	lock inner part	/R -88	1	
(17)	928 537 053 09	door lock inner part	/LL/L89-	1	
(17)	928 537 054 10	door lock inner part	/LL/R89-	1	
(17)	927 537 053 10	door lock inner part	/RL/L89-	1	
(17)	927 537 054 09	door lock inner part	/RL/R89-	1	
18	928 537 721 02	oval-head screw outer part		4	
(19)	928 537 153 03	door lock outer part	/L	1	
19	928 537 154 03	door lock outer part	/R	1	
20	928 537 133 02	door lock striker	-89	2	
20	928 537 133 04	door lock striker	90-	1	
21	928 537 131 03	lock pin	-89	2	
21	928 537 131 03	lock pin	90-	1	
22	928 537 135 04	desk pad	-90	2	
(22)	928 537 135 04	desk pad	91	2	
23	900 249 024 00	countersunk-head screw M 8 X 25		4	
24	928 537 160 04	locking rod		2	
(24)	928 537 160 05	locking rod	89-	2	
25	928 555 359 02	knob	-88	2	
(25)	928 637 138 00	knob	89-	2	
	01C	satin black			
26	928 537 333 03	covering for lock	/L -88	1	
(26)	928 537 333 04	covering for lock	/L 89-	1	
(26)	928 537 334 03	covering for lock	/R -88	1	
(26)	928 537 334 04	covering for lock	/R 89-	1	
-	999 911 037 50	tread		*	
27	-	70 MM		2	
28	999 507 348 02	speed nut B 4,8		4	
29	900 143 118 02	tapping screw B 4,8		4	
30	900 151 028 02	washer B 4,3		4	
31	N 010 239 11	hexagon-head bolt M 8 X 18		2	
(32)	928 537 545 02	finger plate	/L	1	
32	928 537 546 02	finger plate	/R	1	
33	900 269 006 07	countersunk-head screw M 4 X 8		2	
34	928 537 049 02	bearing plate	/L	1	
(34)	928 537 050 02	bearing plate	/R	1	
35	999 591 242 01	speed nut D = 4,0		2	
36	928 537 169 00	interior handle	/L	1	
	70B	satin black			
(36)	928 537 170 00	interior handle	/R	1	
	70B	satin black			
37	928 537 557 02	bolt		2	
38	900 116 002 01	lock washer		2	
39	928 537 157 02	nut lock		2	
40	900 269 015 02	countersunk-head screw M 5 X 10		6	
41	928 537 055 02	bowden cable		2	
42	911 613 636 00	damping piece		2	
43	928 537 661 02	plate		2	

Pos	Part Number	Name	Remarks	Qty	Model
44	928 537 063 04	bearing	/L	1	
(44)	928 537 064 04	bearing	/R	1	
45	900 076 010 02	hexagon nut M 6		4	
46	N 012 006 4	lock ring B 6		4	
47	N 014 761 2	pan-head screw M 6 X 12		4	
48	N 012 226 5	spring washer A 6		4	
49	928 537 140 03	connecting rod		1	
50	928 537 111 04	operating rod		2	
51	928 537 531 03	desk pad		2	
52	928 537 633 05	door lock cylinder with stipulated lock-no. without key state lock number		2	
52	928 537 903 02	door lock cylinder with 1 key w/o stipulated lock number		2	
53	928 537 713 02	contact switch	/L	1	
53	928 537 714 02	contact switch	/R	1	
54	928 537 493 02	compression spring		2	
55	928 537 495 03	gasket		2	
56	928 538 033 02	key state lock number with stipulated lock-no.		3	
57	944 538 431 00	key cap		2	
58	944 538 041 00	key lamp		2	
59	944 538 443 00	emblem		2	
60	000 043 204 21	grease for lock cylinder		X	
61	928 537 747 00	luminous point		2	
62	928 637 137 00	pulse sender	89-	2	
63	900 119 035 02	pan-head screw M 6X8		2	
64	N 011 524 7	washer		2	
65	999 703 224 40	cap		2	
66	928 537 630 02	bulb		1	

- -- E N D -- -

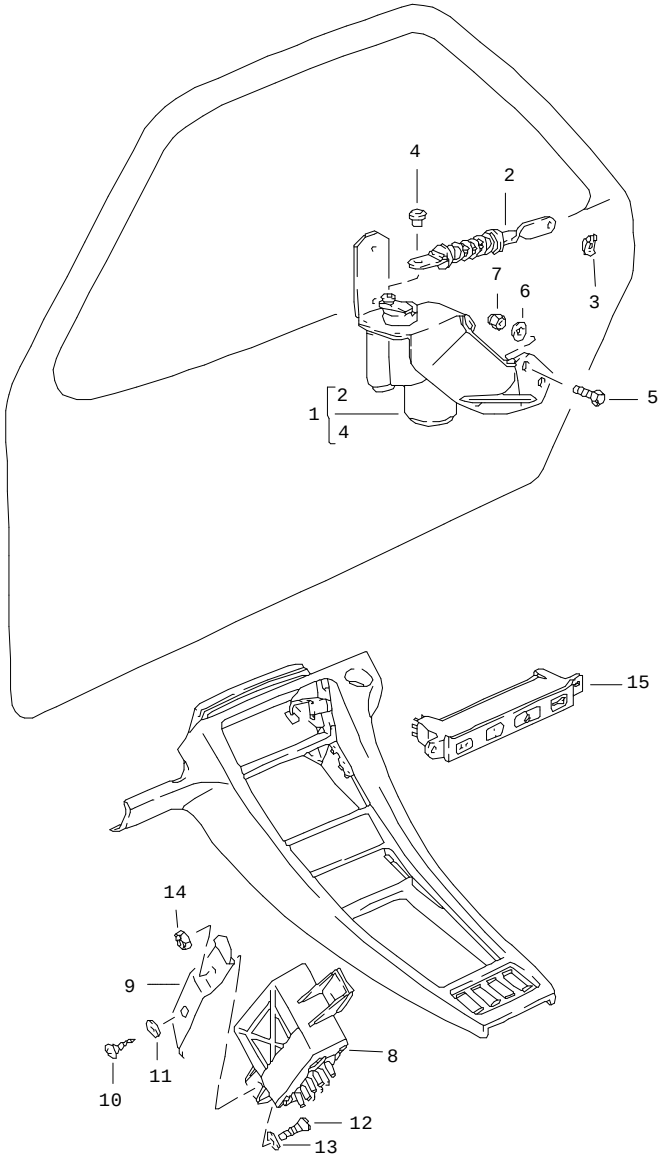

Pos	Part Number	Name	Remarks	Qty	Model
		central locking system	-88		
1	928 624 401 02	electric motor	/L	1	
1	928 624 402 02	electric motor	/R	1	
2	928 624 403 00	operating rod		2	
3	999 166 054 02	sl-lock		4	
4	999 591 570 40	clip		2	
5	N 010 207 6	hexagon-head bolt M5 X 12		4	
6	900 151 027 02	washer B5,3		4	
7	900 910 009 02	lock nut M5		4	
8	928 618 125 00	control unit		1	
9	928 618 135 00	support		1	
10	N 014 139 7	oval-head screw M 6 X 20		1	
11	N 011 524 7	washer A 6,4		1	
12	N 014 140 5	oval-head screw M 6 X 25		1	
13	N 011 524 7	washer A 6,4		1	
14	900 076 010 02	hexagon nut M 6 see group		1	
15	-	9/06/05			
		harnesses see group 9/02/11			
		- -- E N D -- -			

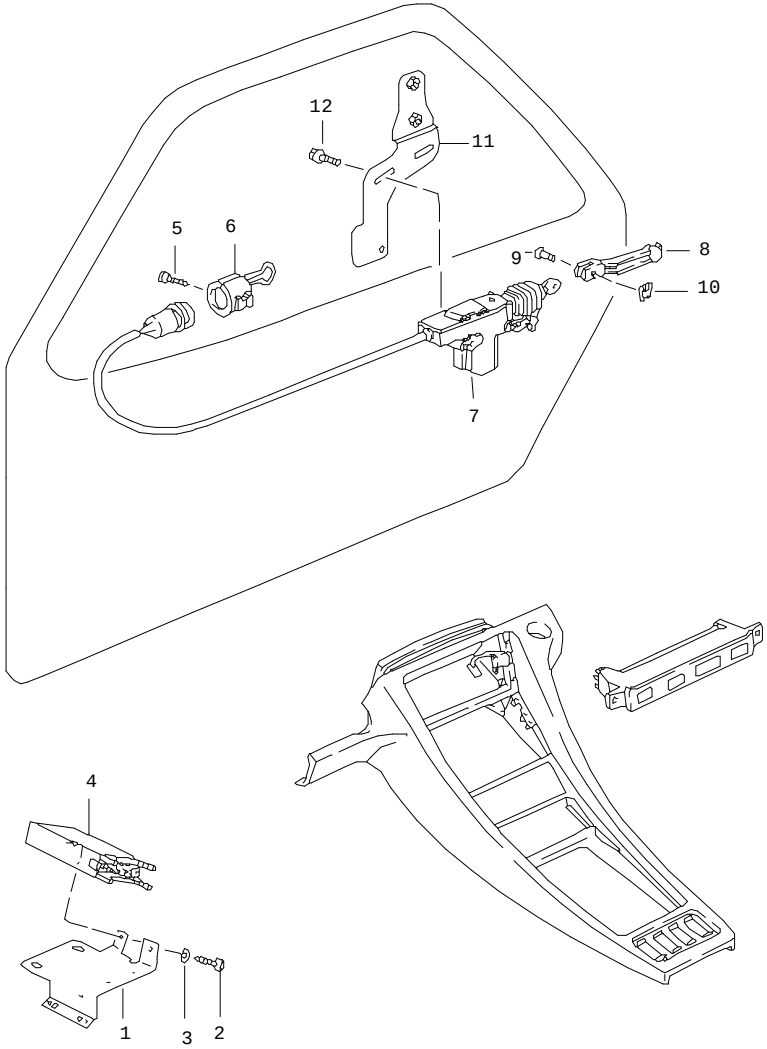

Pos	Part Number	Name	Remarks	Qty	Model
		central locking system	89-		
1	928 618 416 01	plate	89	1	
(1)	928 618 416 01	plate	90	1	
2	N 013 957 5	tapping screw BZ 3,5 X 9,5	-90	2	
3	N 011 521 3	washer A 3,7	-90	2	
4	911 618 113 01	control unit	-90	1	
5	900 143 104 02	oval-head sheetmetal screw BZ 3,5 X 9,5		2	
6	944 612 450 01	support		2	
7	928 624 211 00	element use also: for cars up to MOD.90 928 612 930 00		2 1	
8	928 537 571 00	operating rod		2	
9	N 100 438 01	bolt		2	
10	N 012 644 1	lock		2	
11	928 537 113 03	support	/L	1	
(11)	928 537 114 03	support	/R	1	
12	999 919 035 02	hexagon-head bolt		4	
		- -- E N D -- -			

Model	Year	MG	SG	Illustration	Restrictions	Update				
928	91	8	04	804-15		179	15:51	02.09.2004	PORSCHE	PET	PORSCHE

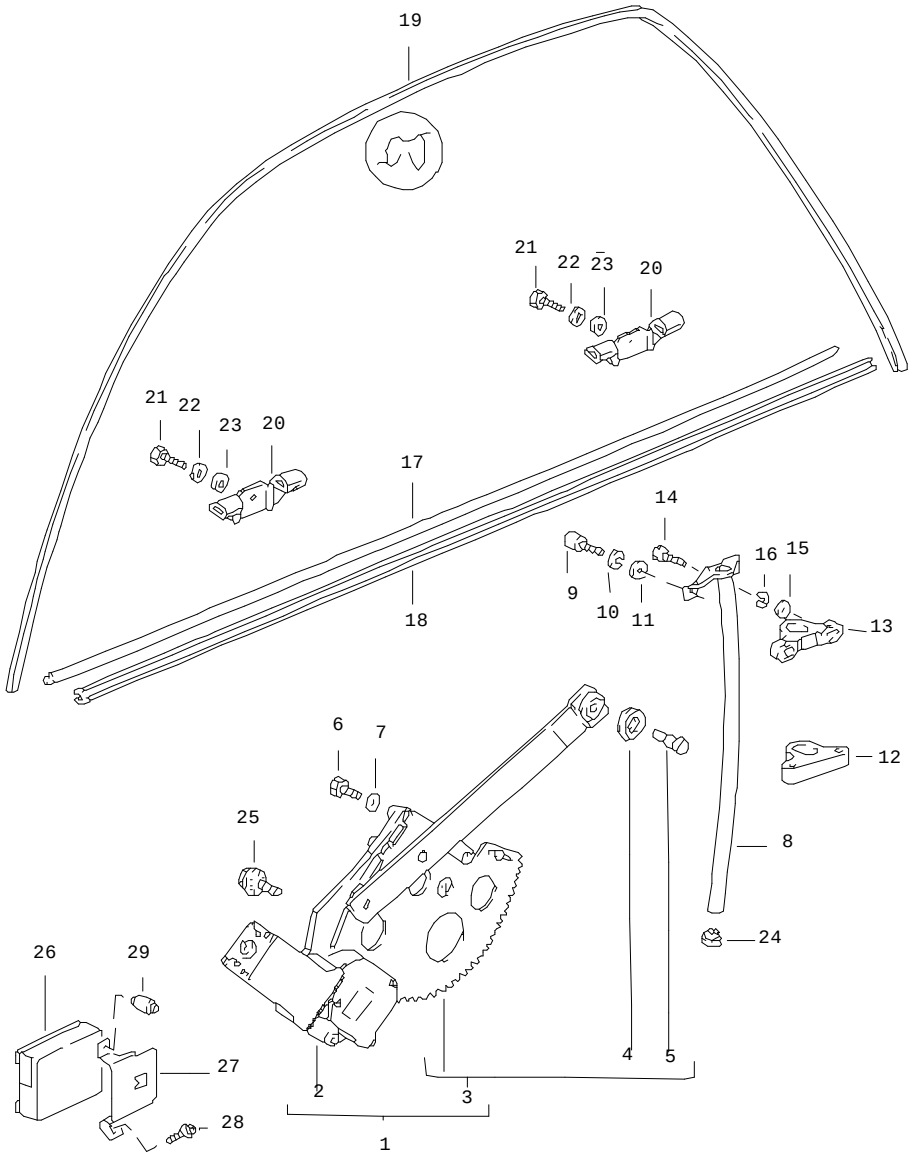

Pos	Part Number	Name	Remarks	Qty	Model
		power windows			
1	928 537 075 06	power windows with engine and transmission	/L -90	1	
(1)	928 537 076 06	power windows with engine and transmission	/R -90	1	
(1)	928 537 075 06	power windows with engine and transmission	/L 91	1	
(1)	928 537 076 06	power windows with engine and transmission	/R 91	1	
2	928 624 013 03	engine and transmission for window opener	/L	1	
(2)	928 624 014 03	engine and transmission for window opener	/R	1	
3	928 537 909 04	power windows without engine and transmission	/L	1	
(3)	928 537 910 04	power windows without engine and transmission	/R	1	
4	928 537 918 00	roller		2	
5	928 537 917 00	bolt		2	
6	N 010 210 13	hexagon-head bolt M 6 X 10		8	
7	N 012 226 5	spring washer A 6		8	
8	928 537 263 02	guide tube	/L	1	
(8)	928 537 264 02	guide tube	/R	1	
9	900 067 008 02	pan-head screw M 6 X 12		4	
10	900 151 007 02	washer B 7,4		4	
11	N 012 006 4	lock ring B 6		4	

Pos	Part Number	Name	Remarks	Qty	Model
12	928 537 259 02	slide lower	/L	2	
(12)	928 537 260 02	slide lower	/R	2	
13	928 537 289 02	slide upper	/L	2	
(13)	928 537 290 02	slide upper	/R	2	
14	900 075 016 02	hexagon-head bolt M 6 X 22		4	
15	N 011 524 7	washer B 6,4		4	
16	N 012 006 4	lock ring B 6		4	
17	928 537 319 03	sealing for door slot	/L	1	
(17)	928 537 320 03	sealing for door slot	/R	1	
18	928 537 321 03	sealing for door slot outer	/L	1	
18	928 537 322 03	sealing for door slot outer	/R	1	
19	928 537 323 03	window guide	/L	1	
(19)	928 537 324 03	window guide	/R	1	
-	999 920 004 02	u-clamp		10	
20	928 537 085 03	stop		4	
21	N 014 761 2	pan-head screw M 6 X 12		4	
22	N 012 226 5	spring washer B 6		4	
23	999 025 108 02	washer 6,4		4	
24	928 537 285 02	insert		2	
25	999 093 004 02	hexagon-head bolt		6	
26	928 618 040 00	control unit	90-	1	
27	928 618 241 00	support	90-	1	
28	900 143 143 02	tapping screw B 4,2 X 16	90-	1	
29	999 049 008 40	plastic nut	90-	1	

- -- E N D -- -

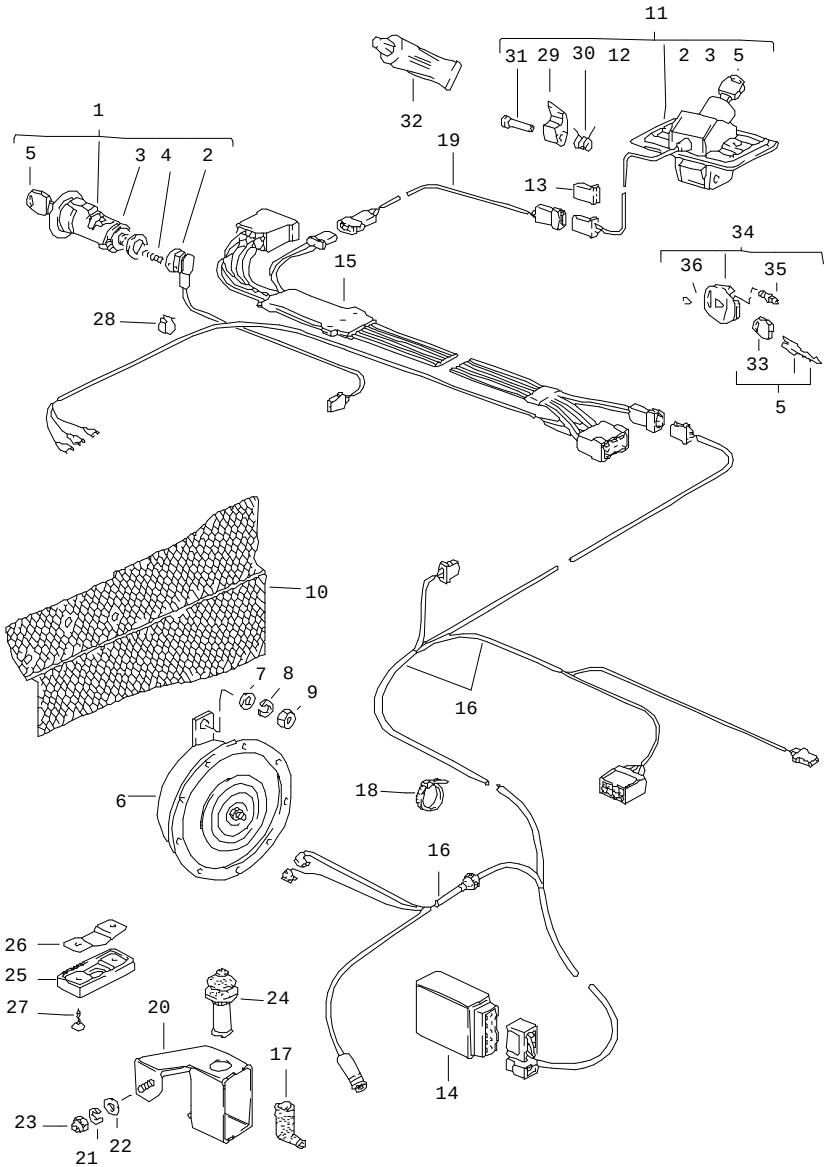

Pos	Part Number	Name	Remarks	Qty	Model
		alarm system			M 525/M 533
1	928 537 906 02	door lock cylinder with microswitch with stipulated lock-no. with 1 key state lock number	/R	1	
1	928 537 905 02	door lock cylinder with microswitch with stipulated lock-no. with 1 key state lock number	/L	1	
1	928 537 908 02	door lock cylinder with microswitch with 1 key	/R	1	
1	928 537 907 02	door lock cylinder with microswitch with 1 key	/L	1	
(2)	928 537 713 02	contact switch	/L	1	
2	928 537 714 02	contact switch	/R	1	
3	928 537 493 02	compression spring		3	
4	928 537 495 03	gasket		3	
5	928 538 032 02	key state lock number with stipulated lock-no.		3	
6	928 635 105 00	high volume horn	-89	1	
(6)	964 637 117 00	horn	90-	1	
7	900 025 008 09	washer A 10,5		1	
(7)	900 025 007 02	washer A 8,4	90-	1	
8	900 027 016 02	lock ring B 10	-89	1	
9	N 011 010 6	hexagon nut M 10	-89	1	

Pos	Part Number	Name	Remarks	Qty	Model
(9)	900 076 025 02	hexagon nut M 8	90-	1	
10	928 504 353 02	grille	/LL	1	
10	927 504 353 02	grille	/RL	1	
11	928 512 901 03	lid lock upper part with stipulated lock-no. with 1 key state lock number		1 1	
11	928 512 903 03	lid lock upper part w/o stipulated lock number with 1 key		1 1	
12	928 512 070 02	contact switch	/H	1	
13	171 971 999 B	terminal sleeve housing		3	
14	928 637 104 00	control unit	-88	1	
(14)	928 637 104 01	control unit	-88	1	(CH)
(14)	928 637 104 03	control unit	89-90	1	
(14)	928 637 104 04	control unit	89-90	1	(CH)
(14) A	928 618 260 00	control unit	91	1	
(14)	928 618 260 01	control unit	91	1	
-	928 618 261 00	support for control unit	91	1	
15	928 612 008 08	wiring harness	-89	1	
(15)	928 612 008 09	wiring harness	90-	1	
16	928 612 182 05	wiring harness	-88	1	
16	928 612 182 07	wiring harness	89-	1	
17	113 927 249	protection cap		1	
18	999 513 003 40	tie-wrap		4	
19	928 612 187 00	wiring harness	/LL	1	
19	928 612 183 00	wiring harness	/RL	1	

Pos	Part Number	Name	Remarks	Qty	Model
20	928 637 021 00	switch housing		1	
21	N 012 005 3	lock ring B 5		1	
22	900 151 027 02	washer A 5,3		1	
23	N 011 005 14	hexagon nut M 5		1	
24	928 613 173 00	contact switch		1	
25	928 637 121 00	protection cap		1	
26	928 637 123 00	plate		1	
27	N 014 098 6	tapping screw		2	
28	999 591 465 02	cable clamp		2	
29	928 512 161 03	latch		1	
30	928 512 163 02	spring		1	
31	928 512 165 02	clinch pin		1	
32	000 043 204 21	grease for lock cylinder		X	
33	944 538 431 00	key cap		3	
34	944 538 041 00	key lamp		2	
35	928 537 630 02	bulb		2	
36	944 538 443 00	emblem		2	
		- -- E N D -- -			

Model	Year	MG	SG	Illustration	Restrictions	Update	15:51	02.09.2004	PORSCHE	PET	PORSCHE
928	91	8	05	805-00		179					

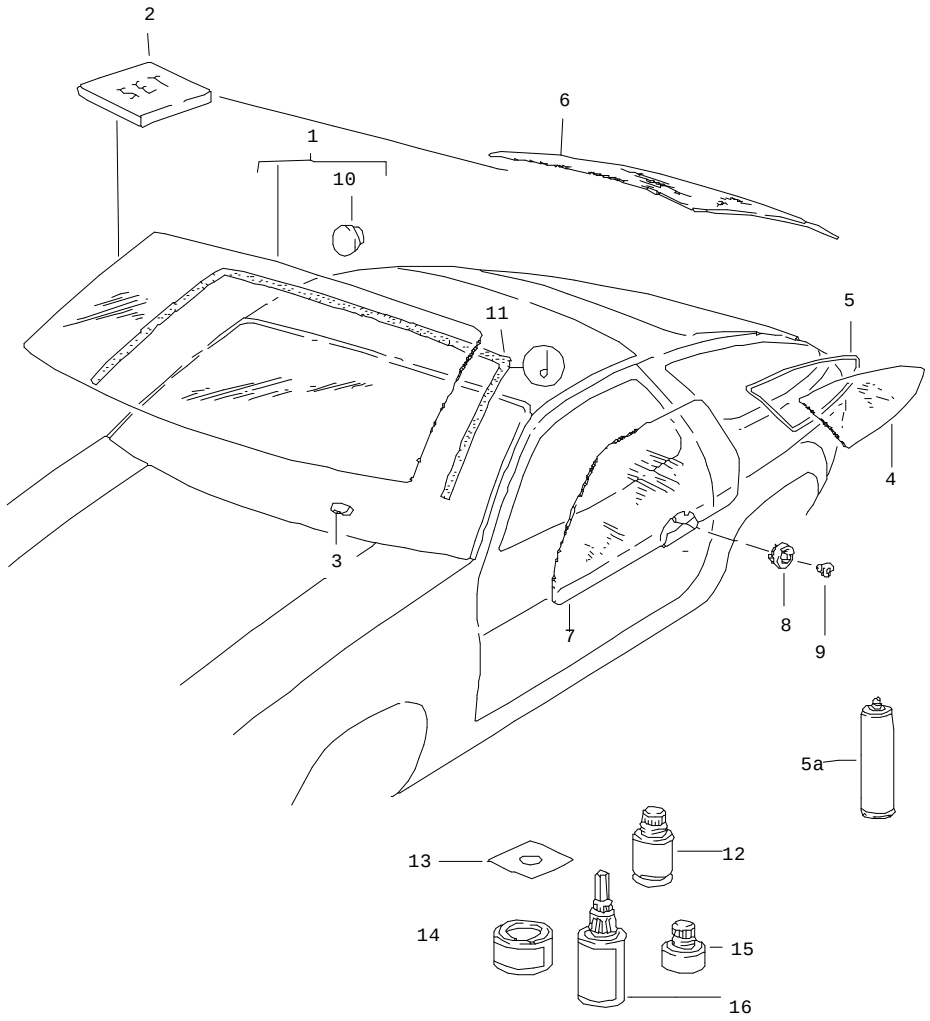

Pos	Part Number	Name	Remarks	Qty	Model
		windows			
1	928 541 011 06	windscreen clear with antenna	-88	1	
1	928 541 015 04	windscreen tinted green with antenna	-88	1	
1	928 541 015 04	windscreen sekuriflex tinted green with antenna	-88	1	
1	928 541 017 04	windscreen sekuriflex clear with antenna	-88	1	
1	928 541 016 05	windscreen green upper part: dark green with antenna	-88	1	
1	928 541 011 06	windscreen clear	89	1	
1	928 541 011 05	windscreen tinted green	89	1	
1	928 541 011 07	windscreen green upper part: dark green	89	1	
1	928 541 011 06	windscreen clear	90	1	
1	928 541 011 05	windscreen tinted green	90	1	
1	928 541 011 07	windscreen green upper part: dark green	90	1	

Pos	Part Number	Name	Remarks	Qty	Model
1	928 541 011 06	windscreen clear	91	1	
1	928 541 011 05	windscreen tinted green	91	1	
1	928 541 011 07	windscreen green upper part: dark green	91	1	
1	928 541 011 06	windscreen airbag clear	91	1	
1	928 541 011 05	windscreen airbag tinted green	91	1	
1	928 541 011 07	windscreen airbag green upper part: dark green	91	1	
-	911 541 112 02	film for stickers		X	
2	A 999 915 509 40	adhesive set		1	M 562
2	000 043 300 94	adhesive set windscreen		1	M 562
2	477 898 011 A	adhesive set windscreen		1	
3	928 541 121 04	spacer		2	
4	928 543 105 08	side window tinted green	/L	1 1	
(4)	928 543 105 09	side window tinted green	/L	1 1	M 471
(4)	928 543 106 08	side window tinted green	/R	1 1	
(4)	928 543 106 09	side window tinted green	/R	1 1	M 471
5	928 543 037 04	sealing frame	/L	1	
(5)	928 543 038 04	sealing frame without rear spoiler	/R	1	
(5)	928 543 045 04	sealing frame	/L -88	1	
(5)	928 543 046 04	sealing frame with rear spoiler	/R -88	1	
(5A)	A 000 043 204 82	adhesive		1	
(5A)	000 043 204 82	adhesive		1	
6	928 545 018 03	rear window tinted green		1	M 471
6	928 545 018 02	rear window tinted green		1	
(6)	928 545 018 04	rear window tinted green	89-	1	M 602
-	477 898 011 A	sealing set rear window		1	
7	928 537 101 02	door glass tinted green	/L	1 1	
(7)	928 537 102 02	door glass tinted green	/R	1 1	
8	928 537 281 04	plug		4	
9	928 537 277 02	threaded piece		4	
10	477 845 043	adhesive plate		1	
11	928 555 509 02	piping windscreen		1	
	01C	black			
		mounting parts for interior mirror see technical information GR.6 NR.2/91			

Pos	Part Number	Name	Remarks	Qty	Model	Pos	Part Number	Name	Remarks	Qty	Model
12	000 043 157 00	cleaning agents		X							
13	000 043 177 00	cover foil		1							
14	000 043 158 00	primer PRIMER		X							
15	000 043 202 65	loctite activator		X							
16	000 043 051 00	adhesive		X							
		- -- E N D -- -									

Model	Year	MG	SG	Illustration	Restrictions	Update	15:51	02.09.2004	PORSCHE	PET	PORSCHE
928	91	8	06	806-00		179					

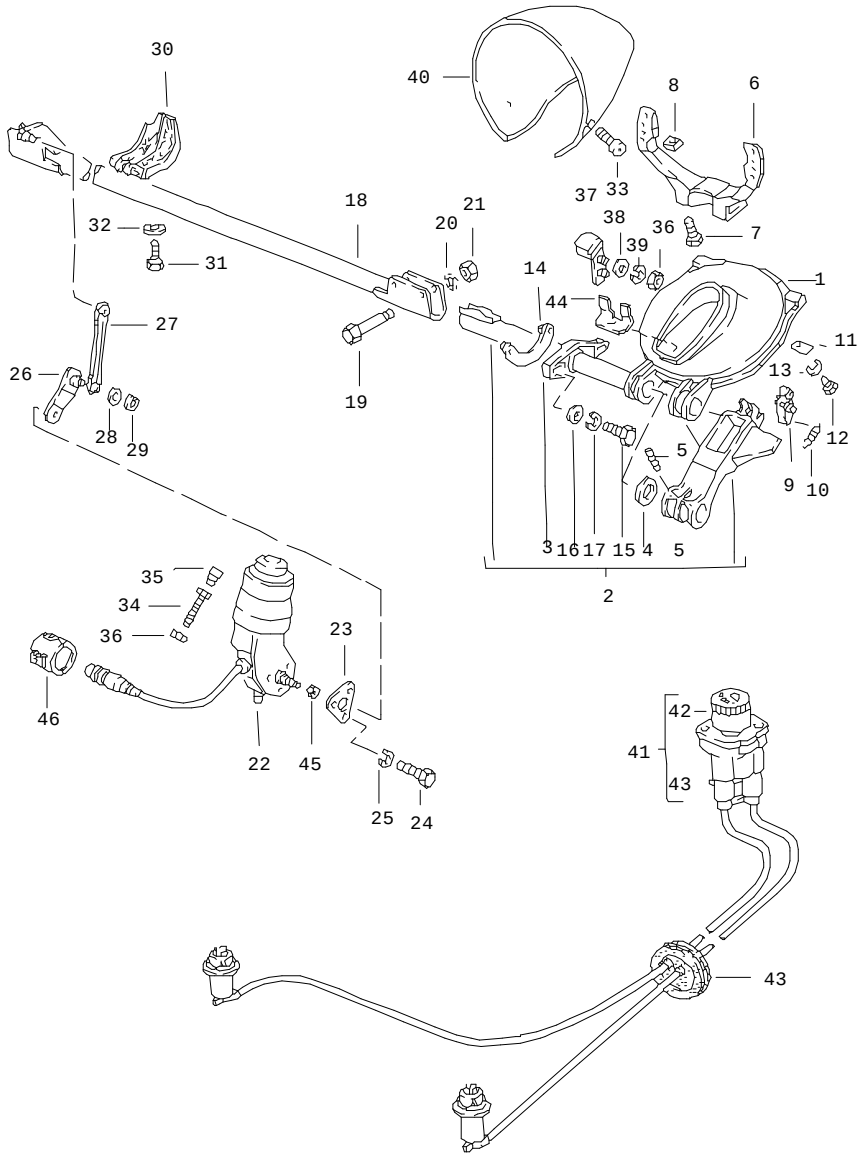

Pos	Part Number	Name	Remarks	Qty	Model
		pop-up headlight			
1	928 750 243 05	swivel frame	-89	2	
1	928 750 243 05	swivel frame	90-	2	
2	928 750 097 05	driving arm	/L -89	1	
(2)	928 750 097 05	driving arm	/L 90-	1	
2	928 750 098 05	driving arm	/R -89	1	
(2)	928 750 098 05	driving arm	/R 90-	1	
3	928 750 211 04	bearing headlamp shaft		2 1	
4	928 750 253 02	washer		4	
5	900 095 085 02	spiral clamping pin		4	
6	928 750 285 03	supporting arm	-89	2	
6	928 750 285 04	supporting arm	90-	2	
7	900 067 011 02	pan-head screw M 6 X 20		4	
-	999 025 108 02	washer 6,5		4	
8	900 076 010 02	hexagon nut M 6		4	
9	928 750 079 02	locking segment		2	
10	928 750 291 02	tension spring		2	
11	928 750 325 02	plate		4	
12	999 015 004 02	screw AM 5 X 10		4	
13	900 025 003 02	washer A 5,3		4	
14	928 750 071 02	plate		2	
15	900 074 015 02	hexagon-head bolt M 6 X 30		4	
16	N 011 666 7	washer B 6,4		4	

Pos	Part Number	Name	Remarks	Qty	Model
17	N 012 006 4	lock ring B 6		4	
18	928 750 041 05	shaft centre		1 1	
19	900 075 343 02	hexagon-head bolt M 6 X 45		4	
20	999 025 093 09	washer 6,4		4	
21	900 910 012 02	lock nut M 6		4	
22	928 624 023 00	engine		1	
23	928 750 207 02	plate		1	
24	999 072 005 09	hexagon-head bolt M 6 X 12		3	
25	N 012 006 4	lock ring B 6		3	
26	928 750 065 03	lever		1	
27	928 750 067 02	push rod		1	
28	900 031 001 02	washer 8,4		2	
29	900 116 009 01	lock washer 6		2	
30	928 750 183 03	guide		1	
31	999 218 016 02	screw M 6 X 16		2	
32	N 012 226 5	spring washer B6		2	
33	999 919 008 07	oval-head screw 3,9 X 13		2	
34	N 010 221 3	hexagon-head bolt M 6 X 35		2	
35	914 504 319 00	grommet		2	
36	900 076 010 02	hexagon nut M 6		2	
37	928 750 031 02	stop		2	
38	900 151 003 02	washer A 6,4		4	
39	N 012 006 4	lock ring B 6		4	
40	928 750 083 02	housing		2	
(41)	928 631 220 01	governor headlight levelling system manually adjustable	-89	1	
(41)	928 613 146 00	potentiometer	90-	1	
42	928 631 221 01	rotary knob	-89	1	
(42)	928 613 148 00	rotary knob	90-	1	
	01C	black			
-	928 631 223 02	rose	-89	1	
-	928 631 223 03	rose	90-	1	
-	928 799 750 07	tension spring	-89	2	
-	900 034 013 02	hexagon nut	90-	1	
43	927 631 224 01	grommet	-89	1	
44	928 750 255 05	bracket		2	
45	999 084 055 02	lock nut M 8		1	
46	944 612 450 01	support		1	
		- -- E N D -- -			

Model	Year	MG	SG	Illustration	Restrictions	Update				
928	91	8	07	807-00		179	15:51	02.09.2004	PORSCHE	PET	PORSCHE

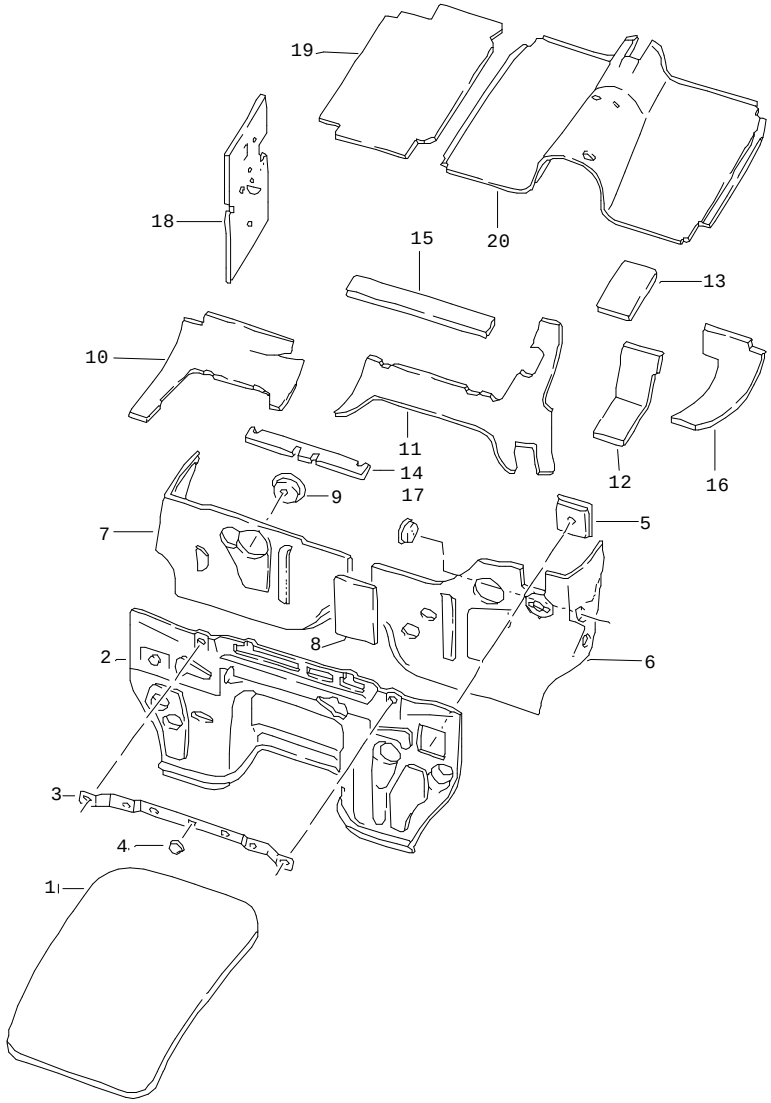

Pos	Part Number	Name	Remarks	Qty	Model
		body sound proofing 1			
1	928 556 285 02	insulation bonnet	/H	1	
2	928 556 089 06	insulation	/LL	1	
(2)	927 556 089 05	insulation engine compartment	/RL	1	
3	928 556 623 02	retaining strip		1	
4	999 591 590 02	speed nut		7	
5	928 556 057 03	insert firewall		1	
6	A 928 556 061 04	sound absorber	/LL/L-89	1	
(6)	928 556 061 05	sound absorber	/LL/L90-	1	
(6)	927 556 061 04	sound absorber firewall	/RL/L87-	1	
7	928 556 062 03	insulation	/LL/R-89	1	
(7)	928 556 062 06	sound absorber	/LL/R90-	1	
(7)	927 556 062 04	sound absorber firewall	/RL/R	1	
8	928 556 065 03	insulation firewall intermediate piece		1 1	
9	928 556 063 05	insert firewall		1	
10	928 556 155 04	insulation	/LL -89	1	
(10)	928 556 155 04	insulation	/LL 90-	1	
(10)	927 556 155 03	insulation cross panel right	/RL	1 1	
11	928 556 159 06	insulation	/LL -89	1	
(11)	928 556 159 06	insulation	/LL 90-	1	
(11)	927 556 159 04	insulation cross panel centre	/RL	1 1	

Pos	Part Number	Name	Remarks	Qty	Model
12	928 556 169 04	insert	/LL -89	1	
(12)	928 556 169 04	insert	/LL 90-	1	
(12)	927 556 169 03	insert steering shaft	/RL	1	
13	928 556 171 04	insert	-89	1	
(13)	928 556 171 04	insert brake booster	90-	1	
14	928 556 267 02	insulation cross panel		1	
15	928 556 387 03	insulation heater		1	
16	928 556 173 05	insulation	/LL -89	1	
(16)	928 556 173 05	insulation	/LL 90-	1	
(16)	927 556 173 03	insulation cross panel	/RL	1	
17	928 556 075 05	insert headlight levelling system	/RL	1	
(17)	928 556 075 06	insert headlight levelling system	/LL	1	
(17)	928 556 075 05	insert headlight levelling system	88-	1	(J)
18	928 556 353 04	insulation	/LL/L-88	1	
(18)	928 556 353 05	sound absorber	/LL 89-	1	
(18)	927 556 353 02	insulation	/RL/R-89	1	
(18)	927 556 354 04	insulation side section	/RL/R90-	1	
(19)	928 556 291 05	insulation	/LL/L-89	1	
(19)	928 556 253 00	insulation	/LL/L90-	1	
(19)	927 556 291 03	sound absorber	/RL/L	1	
19	928 556 292 03	sound absorber	/LL/R-89	1	
(19)	928 556 253 00	insulation	/LL/R90-	1	
(19)	927 556 292 05	insulation floor	/RL/R	1	
20	928 556 031 04	insulation	-89	1	
(20)	928 556 031 04	insulation tunnel front	90-	1	

- -- E N D -- -

Model	Year	MG	SG	Illustration	Restrictions	Update				
928	91	8	07	807-01		179	15:52	02.09.2004	PORSCHE	PET	PORSCHE

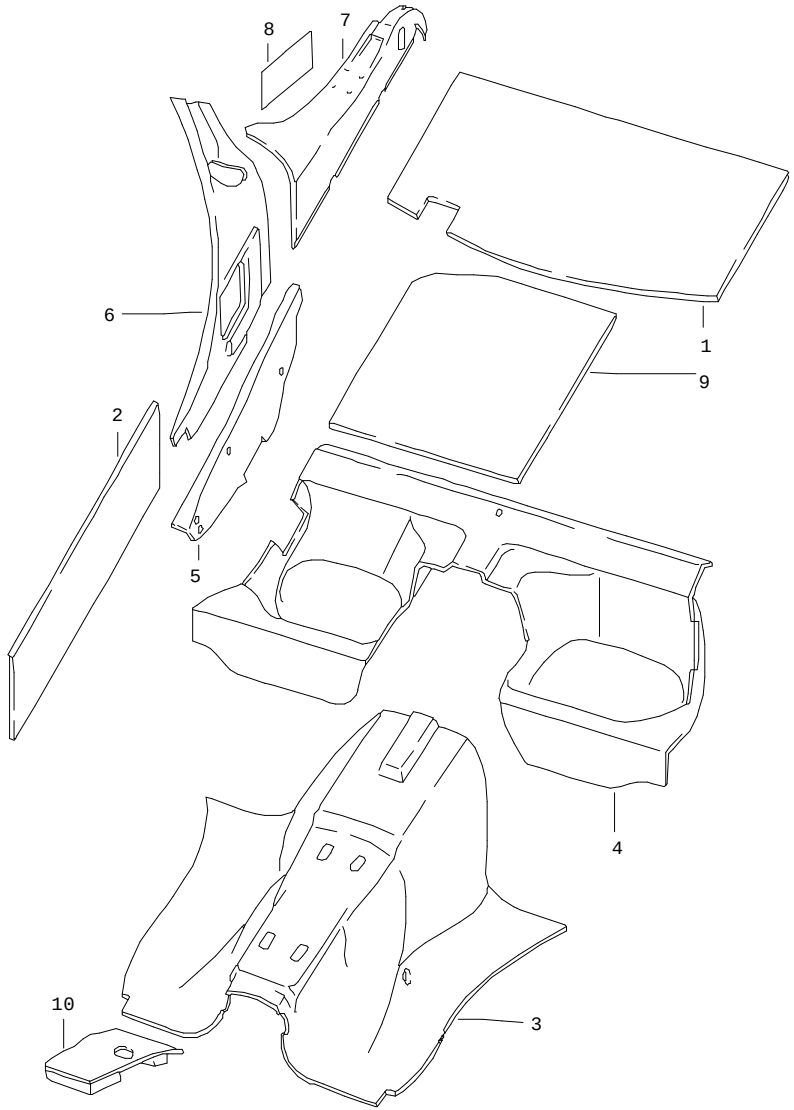

Pos	Part Number	Name	Remarks	Qty	Model
		body sound proofing 2			
1	928 556 233 02	insulation roof		1	
2	928 556 235 02	insulation door		2	
(3)	928 556 033 06	insulation tunnel		1	
(4)	928 556 055 05	sound absorber seat well		1	
5	928 556 205 04	insulation	/L	1	
5	927 556 206 04	insulation bracket	/R	1	
6	928 556 261 05	insulation	/V/L -88	1	
(6)	928 556 261 05	insulation	/V/L 89-	1	
6	928 556 262 05	insulation	/V/R -88	1	
(6)	928 556 262 05	insulation interior panel	/V/R 89-	1	
7	928 556 251 03	insulation	/H/L -88	1	
(7)	928 556 251 04	insulation	/H/L 89	1	
(7)	928 556 251 05	insulation	/H/L 90-	1	
7	928 556 252 03	insulation	/H/R -88	1	
(7)	928 556 252 04	insulation	/H/R 89	1	
(7)	928 556 252 05	insulation interior panel	/H/R 90-	1	
9	928 556 239 02	insulation		1	
(9)	928 556 239 03	insulation	6	1	M 293/295/ M 496
(9)	928 556 239 04	insulation boot floor plate		1 1	M 195
10	928 556 495 02	insulation	88-	1	M 195/495
		- -- E N D -- -			

Model	Year	MG	SG	Illustration	Restrictions	Update	15:52	02.09.2004	PORSCHE	PET	PORSCHE
928	91	8	07	807-05		179					

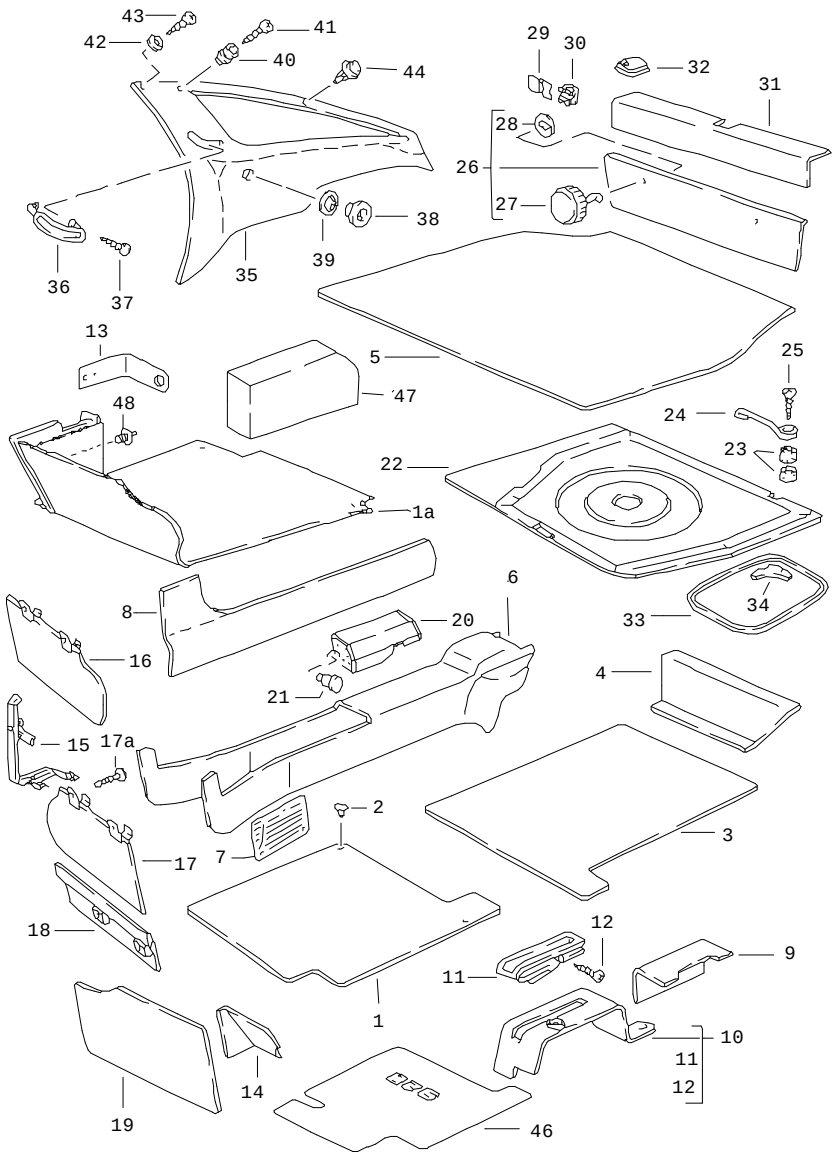

Pos	Part Number	Name	Remarks	Qty	Model
		linings			
1	928 551 011 06	carpet	/LL/L-89	1	
	70E	black	-88		
	5FV	black	89-		
	5MF	mahogany	-90		
	3KF	marine blue	-88		
	4KV	marine blue	89-		
	80E	burgundy	-88		
	8MD	burgundy	89-90		
	8JK	greyish green	-88		
	2XF	linen	-90		
	8UT	cashmere beige	89-		
	4MM	plum red	-88		
	7VM	silver-grey	-88		
	1VD	champagne	-88		
	5UM	caramel	-90		
	3KM	venetian blue	-90		
	3WT	slate grey	89-90		
	7VT	silk grey	89-90		
	9MT	velvet red	89-90		
(1)	928 551 011 08	carpet	/LL/L90-	1	
	5FV	black	89-		
	5MF	mahogany	-90		
	4KV	marine blue	89-		
	8MD	burgundy	89-90		
	2XF	linen	-90		
	8UT	cashmere beige	89-		

Pos	Part Number	Name	Remarks	Qty	Model
	5UM	caramel	-90		
	3KM	venetian blue	-90		
	3WT	slate grey	89-90		
	7VT	silk grey	89-90		
	9MT	velvet red	89-90		
	4XR	classic grey	91		
	4ZN	cobalt blue	91		
	8WZ	magenta	91		
	6YR	light grey	91		
	M33	matador red	91		
	D13	carrara grey	91		
	J23	sherwood green	91		
(1A)	928 551 010 05	carpet	/LL/R 87	1	
	70E	black	-88		
	5MF	mahogany	-90		
	3KF	marine blue	-88		
	80E	burgundy	-88		
	8JK	greyish green	-88		
	2XF	linen	-90		
	4MM	plum red	-88		
	7VM	silver-grey	-88		
	1VD	champagne	-88		
	5UM	caramel	-90		
	3KM	venetian blue	-90		
(1A)	928 551 010 07	carpet	/LL/R-89	1	
	70E	black	-88		
	5FV	black	89-		
	5MF	mahogany	-90		
	3KF	marine blue	-88		
	4KV	marine blue	89-		
	80E	burgundy	-88		
	8MD	burgundy	89-90		
	8JK	greyish green	-88		
	2XF	linen	-90		
	8UT	cashmere beige	89-		
	4MM	plum red	-88		
	7VM	silver-grey	-88		
	1VD	champagne	-88		
	5UM	caramel	-90		
	3KM	venetian blue	-90		
	3WT	slate grey	89-90		
	7VT	silk grey	89-90		
	9MT	velvet red	89-90		
(1A)	928 551 010 08	carpet	/LL/R90-	1	
	5FV	black	89-		
	5MF	mahogany	-90		
	4KV	marine blue	89-		
	8MD	burgundy	89-90		
	2XF	linen	-90		
	8UT	cashmere beige	89-		
	5UM	caramel	-90		
	3KM	venetian blue	-90		
	3WT	slate grey	89-90		
	7VT	silk grey	89-90		

Pos	Part Number	Name	Remarks	Qty	Model
	9MT	velvet red	89-90		
	4XR	classic grey	91		
	4ZN	cobalt blue	91		
	8WZ	magenta	91		
	6YR	light grey	91		
	M33	matador red	91		
	D13	carrara grey	91		
	J23	sherwood green	91		
(1A)	927 551 009 05	carpet	/RL/L87	1	
	70E	black	-88		
	5MF	mahogany	-90		
	3KF	marine blue	-88		
	80E	burgundy	-88		
	8JK	greyish green	-88		
	2XF	linen	-90		
	4MM	plum red	-88		
	7VM	silver-grey	-88		
	1VD	champagne	-88		
	5UM	caramel	-90		
	3KM	venetian blue	-90		
(1A)	927 551 009 07	carpet	/RL/L88-	1	
	70E	black	-88		
	5FV	black	89-		
	5MF	mahogany	-90		
	3KF	marine blue	-88		
	4KV	marine blue	89-		
	80E	burgundy	-88		

Pos	Part Number	Name	Remarks	Qty	Model
	8MD	burgundy	89-90		
	8JK	greyish green	-88		
	2XF	linen	-90		
	8UT	cashmere beige	89-		
	4MM	plum red	-88		
	7VM	silver-grey	-88		
	1VD	champagne	-88		
	5UM	caramel	-90		
	3KM	venetian blue	-90		
	3WT	slate grey	89-90		
	7VT	silk grey	89-90		
	9MT	velvet red	89-90		
	4XR	classic grey	91		
	4ZN	cobalt blue	91		
	8WZ	magenta	91		
	6YR	light grey	91		
	M33	matador red	91		
	D13	carrara grey	91		
	J23	sherwood green	91		
(1)	927 551 012 06	carpet	/RL/R89-	1	
	5FV	black	89-		
	5MF	mahogany	-90		
	4KV	marine blue	89-		
	8MD	burgundy	89-90		
	2XF	linen	-90		
	8UT	cashmere beige	89-		
	5UM	caramel	-90		

Pos	Part Number	Name	Remarks	Qty	Model
	3KM	venetian blue	-90		
	3WT	slate grey	89-90		
	7VT	silk grey	89-90		
	9MT	velvet red	89-90		
	4XR	classic grey	91		
	4ZN	cobalt blue	91		
	8WZ	magenta	91		
	6YR	light grey	91		
	M33	matador red	91		
	D13	carrara grey	91		
	J23	sherwood green	91		
-	928 551 342 00	cover for control units	90-	1	
	5FV	black	89-		
	5MF	mahogany	-90		
	4KV	marine blue	89-		
	8MD	burgundy	89-90		
	2XF	linen	-90		
	8UT	cashmere beige	89-		
	7VT	silk grey	89-90		
	9MT	velvet red	89-90		
	3WT	slate grey	89-90		
	5UM	caramel	-90		
	3KM	venetian blue	-90		
	4XR	classic grey	91		
	4ZN	cobalt blue	91		
	8WZ	magenta	91		

Pos	Part Number	Name	Remarks	Qty	Model
	6YR	light grey	91		
	M33	matador red	91		
	D13	carrara grey	91		
	J23	sherwood green	91		
2	N 900 685 01	rotary knob		4	
3	928 551 013 07	carpet	/LL/L-89	1	
	70E	black	-88		
	5FV	black	89-		
	5MF	mahogany	-90		
	3KF	marine blue	-88		
	4KV	marine blue	89-		
	80E	burgundy	-88		
	8MD	burgundy	89-90		
	8JK	greyish green	-88		
	2XF	linen	-90		
	4MM	plum red	-88		
	7VM	silver-grey	-88		
	1VD	champagne	-88		
	5UM	caramel	-90		
	3KM	venetian blue	-90		
	8UT	cashmere beige	89-		
	7VT	silk grey	89-90		
	9MT	velvet red	89-90		
	3WT	slate grey	89-90		
(3)	928 551 013 08	carpet	/LL/L90-	1	
	5FV	black	89-		
	5MF	mahogany	-90		

Pos	Part Number	Name	Remarks	Qty	Model
	4KV	marine blue	89-		
	8MD	burgundy	89-90		
	2XF	linen	-90		
	5UM	caramel	-90		
	3KM	venetian blue	-90		
	8UT	cashmere beige	89-		
	7VT	silk grey	89-90		
	9MT	velvet red	89-90		
	3WT	slate grey	89-90		
	4XR	classic grey	91		
	4ZN	cobalt blue	91		
	8WZ	magenta	91		
	6YR	light grey	91		
	M33	matador red	91		
	D13	carrara grey	91		
	J23	sherwood green	91		
(3)	928 551 014 07	carpet	/LL/R-89	1	
	70E	black	-88		
	5FV	black	89-		
	5MF	mahogany	-90		
	3KF	marine blue	-88		
	4KV	marine blue	89-		
	80E	burgundy	-88		
	8MD	burgundy	89-90		
	8JK	greyish green	-88		
	2XF	linen	-90		
	4MM	plum red	-88		

Pos	Part Number	Name	Remarks	Qty	Model
	7VM	silver-grey	-88		
	1VD	champagne	-88		
	5UM	caramel	-90		
	3KM	venetian blue	-90		
	8UT	cashmere beige	89-		
	7VT	silk grey	89-90		
	9MT	velvet red	89-90		
	3WT	slate grey	89-90		
(3)	928 551 014 08	carpet	/LL/R90-	1	
	5FV	black	89-		
	5MF	mahogany	-90		
	4KV	marine blue	89-		
	8MD	burgundy	89-90		
	2XF	linen	-90		
	5UM	caramel	-90		
	3KM	venetian blue	-90		
	8UT	cashmere beige	89-		
	7VT	silk grey	89-90		
	9MT	velvet red	89-90		
	3WT	slate grey	89-90		
	4XR	classic grey	91		
	4ZN	cobalt blue	91		
	8WZ	magenta	91		
	6YR	light grey	91		
	M33	matador red	91		
	D13	carrara grey	91		
	J23	sherwood green	91		

Pos	Part Number	Name	Remarks	Qty	Model
(3)	927 551 013 03	carpet	/RL/L	1	
	70E	black	-88		
	5FV	black	89-		
	5MF	mahogany	-90		
	3KF	marine blue	-88		
	4KV	marine blue	89-		
	80E	burgundy	-88		
	8MD	burgundy	89-90		
	8JK	greyish green	-88		
	2XF	linen	-90		
	4MM	plum red	-88		
	7VM	silver-grey	-88		
	1VD	champagne	-88		
	5UM	caramel	-90		
	3KM	venetian blue	-90		
	8UT	cashmere beige	89-		
	7VT	silk grey	89-90		
	9MT	velvet red	89-90		
	3WT	slate grey	89-90		
	2YN	white	-88		
	4XR	classic grey	91		
	4ZN	cobalt blue	91		
	8WZ	magenta	91		
	6YR	light grey	91		
	M33	matador red	91		
	D13	carrara grey	91		
	J23	sherwood green	91		

Pos	Part Number	Name	Remarks	Qty	Model
(3)	927 551 014 03	carpet	/RL/R	1	
	70E	black	-88		
	5FV	black	89-		
	5MF	mahogany	-90		
	3KF	marine blue	-88		
	4KV	marine blue	89-		
	80E	burgundy	-88		
	8MD	burgundy	89-90		
	8JK	greyish green	-88		
	2XF	linen	-90		
	4MM	plum red	-88		
	7VM	silver-grey	-88		
	1VD	champagne	-88		
	5UM	caramel	-90		
	3KM	venetian blue	-90		
	8UT	cashmere beige	89-		
	7VT	silk grey	89-90		
	9MT	velvet red	89-90		
	3WT	slate grey	89-90		
	2YN	white	-88		
	4XR	classic grey	91		
	4ZN	cobalt blue	91		
	8WZ	magenta	91		
	6YR	light grey	91		
	M33	matador red	91		
	D13	carrara grey	91		
	J23	sherwood green	91		

Pos	Part Number	Name	Remarks	Qty	Model
4	928 551 057 03	lining heel plate	/L	1	
	70E	black	-88		
	5FV	black	89-		
	5MF	mahogany	-90		
	3KF	marine blue	-88		
	4KV	marine blue	89-		
	80E	burgundy	-88		
	8MD	burgundy	89-90		
	8JK	greyish green	-88		
	2XF	linen	-90		
	4MM	plum red	-88		
	7VM	silver-grey	-88		
	1VD	champagne	-88		
	5UM	caramel	-90		
	3KM	venetian blue	-90		
	8UT	cashmere beige	89-		
	7VT	silk grey	89-90		
	9MT	velvet red	89-90		
	3WT	slate grey	89-90		
	4XR	classic grey	91		
	4ZN	cobalt blue	91		
	8WZ	magenta	91		
	6YR	light grey	91		
	M33	matador red	91		
	D13	carrara grey	91		
	J23	sherwood green	91		

Pos	Part Number	Name	Remarks	Qty	Model
(4)	928 551 058 03	lining heel plate	/R	1	
	70E	black	-88		
	5FV	black	89-		
	5MF	mahogany	-90		
	3KF	marine blue	-88		
	4KV	marine blue	89-		
	80E	burgundy	-88		
	8MD	burgundy	89-90		
	8JK	greyish green	-88		
	2XF	linen	-90		
	4MM	plum red	-88		
	7VM	silver-grey	-88		
	1VD	champagne	-88		
	5UM	caramel	-90		
	3KM	venetian blue	-90		
	8UT	cashmere beige	89-		
	7VT	silk grey	89-90		
	9MT	velvet red	89-90		
	3WT	slate grey	89-90		
	4XR	classic grey	91		
	4ZN	cobalt blue	91		
	8WZ	magenta	91		
	6YR	light grey	91		
	M33	matador red	91		
	D13	carrara grey	91		
	J23	sherwood green	91		
5	928 551 061 03	boot floor carpet	-89	1	

Pos	Part Number	Name	Remarks	Qty	Model
	70E	black	-88		
	5FV	black	89-		
	5MF	mahogany	-90		
	3KF	marine blue	-88		
	4KV	marine blue	89-		
	80E	burgundy	-88		
	8MD	burgundy	89-90		
	8JK	greyish green	-88		
	2XF	linen	-90		
	4MM	plum red	-88		
	7VM	silver-grey	-88		
	1VD	champagne	-88		
	5UM	caramel	-90		
	3KM	venetian blue	-90		
	8UT	cashmere beige	89-		
	7VT	silk grey	89-90		
	9MT	velvet red	89-90		
	3WT	slate grey	89-90		
(5)	928 551 061 10	boot floor carpet	90-	1	
	5FV	black	89-		
	5MF	mahogany	-90		
	4KV	marine blue	89-		
	8MD	burgundy	89-90		
	2XF	linen	-90		
	5UM	caramel	-90		
	3KM	venetian blue	-90		
	8UT	cashmere beige	89-		
	7VT	silk grey	89-90		
	9MT	velvet red	89-90		
	3WT	slate grey	89-90		
	4XR	classic grey	91		
	4ZN	cobalt blue	91		
	8WZ	magenta	91		
	6YR	light grey	91		
	M33	matador red	91		
	D13	carrara grey	91		
	J23	sherwood green	91		
(5)	928 551 061 04	boot floor carpet	-89	1	M 293/295/ M 496
	70E	black	-88		
	5FV	black	89-		
	5MF	mahogany	-90		
	3KF	marine blue	-88		
	4KV	marine blue	89-		
	80E	burgundy	-88		
	8MD	burgundy	89-90		
	8JK	greyish green	-88		
	2XF	linen	-90		
	4MM	plum red	-88		
	7VM	silver-grey	-88		
	1VD	champagne	-88		
	5UM	caramel	-90		
	3KM	venetian blue	-90		
	8WT	cashmere beige	89-		
	7VT	silk grey	89-90		

Pos	Part Number	Name	Remarks	Qty	Model
	9MT	velvet red	89-90		
	3WT	slate grey	89-90		
(5)	928 551 061 05	boot floor carpet	-89	1	(AUS)(CDN)
	70E	black	-88		
	5FV	black	89-		
	5MF	mahogany	-90		
	3KF	marine blue	-88		
	4KV	marine blue	89-		
	80E	burgundy	-88		
	8MD	burgundy	89-90		
	8JK	greyish green	-88		
	2XF	linen	-90		
	4MM	plum red	-88		
	7VM	silver-grey	-88		
	1VD	champagne	-88		
	5UM	caramel	-90		
	3KM	venetian blue	-90		
	8UT	cashmere beige	89-		
	7VT	silk grey	89-90		
	9MT	velvet red	89-90		
	3WT	slate grey	89-90		
(5)	928 551 061 13	boot floor carpet	90-	1	(AUS)(CDN)
	5FV	black	89-		
	5MF	mahogany	-90		
	4KV	marine blue	89-		
	8MD	burgundy	89-90		
	2XF	linen	-90		
	5UM	caramel	-90		
	3KM	venetian blue	-90		
	8UT	cashmere beige	89-		
	7VT	silk grey	89-90		
	9MT	velvet red	89-90		
	3WT	slate grey	89-90		
	4XR	classic grey	91		
	4ZN	cobalt blue	91		
	8WZ	magenta	91		
	6YR	light grey	91		
	M33	matador red	91		
	D13	carrara grey	91		
	J23	sherwood green	91		
(5)	928 551 061 07	boot floor carpet	-89	1	M 195
	70E	black	-88		
	5FV	black	89-		
	5MF	mahogany	-90		
	3KF	marine blue	-88		
	4KV	marine blue	89-		
	80E	burgundy	-88		
	8MD	burgundy	89-90		
	8JK	greyish green	-88		
	2XF	linen	-90		
	4MM	plum red	-88		
	7VM	silver-grey	-88		
	1VD	champagne	-88		
	5UM	caramel	-90		

Pos	Part Number	Name	Remarks	Qty	Model
	3KM	venetian blue	-90		
	8UT	cashmere beige	89-		
	7VT	silk grey	89-90		
	9MT	velvet red	89-90		
	3WT	slate grey	89-90		
6	928 551 113 05	lining tunnel for cars with with it is necessary to rework	-89	1	M 195/496
	70E	black	-88		
	5FV	black	89-		
	5MF	mahogany	-90		
	3KF	marine blue	-88		
	4KV	marine blue	89-		
	80E	burgundy	-88		
	8MD	burgundy	89-90		
	8JK	greyish green	-88		
	2XF	linen	-90		
	4MM	plum red	-88		
	7VM	silver-grey	-88		
	1VD	champagne	-88		
	5UM	caramel	-90		
	3KM	venetian blue	-90		
	8UT	cashmere beige	89-		
	7VT	silk grey	89-90		
	9MT	velvet red	89-90		
	3WT	slate grey	89-90		

Pos	Part Number	Name	Remarks	Qty	Model
(6)	928 551 113 06	lining tunnel for cars with with it is necessary to rework	90-	1	M 195/496
	5FV	black	89-		
	5MF	mahogany	-90		
	4KV	marine blue	89-		
	8MD	burgundy	89-90		
	2XF	linen	-90		
	5UM	caramel	-90		
	3KM	venetian blue	-90		
	8UT	cashmere beige	89-		
	7VT	silk grey	89-90		
	9MT	velvet red	89-90		
	3WT	slate grey	89-90		
	4XR	classic grey	91		
	4ZN	cobalt blue	91		
	8WZ	magenta	91		
	6YR	light grey	91		
	M33	matador red	91		
	D13	carrara grey	91		
	J23	sherwood green	91		
7	928 551 137 02	scuff plate	/LL	1	
(8)	927 551 031 05	lining side member	/RL/L	1	
	70E	black	-88		
	5FV	black	89-		
	5MF	mahogany	-90		
	3KF	marine blue	-88		

Pos	Part Number	Name	Remarks	Qty	Model
	4KV	marine blue	89-		
	80E	burgundy	-88		
	8MD	burgundy	89-90		
	8JK	greyish green	-88		
	2XF	linen	-90		
	4MM	plum red	-88		
	7VM	silver-grey	-88		
	1VD	champagne	-88		
	5UM	caramel	-90		
	3KM	venetian blue	-90		
	8UT	cashmere beige	89-		
	7VT	silk grey	89-90		
	9MT	velvet red	89-90		
	3WT	slate grey	89-90		
	4XR	classic grey	91		
	4ZN	cobalt blue	91		
	8WZ	magenta	91		
	6YR	light grey	91		
	M33	matador red	91		
	D13	carrara grey	91		
	J23	sherwood green	91		
8	927 551 032 03	lining side member	/RL/R	1	
	70E	black	-88		
	5FV	black	89-		
	5MF	mahogany	-90		
	3KF	marine blue	-88		
	4KV	marine blue	89-		

Pos	Part Number	Name	Remarks	Qty	Model
	80E	burgundy	-88		
	8MD	burgundy	89-90		
	8JK	greyish green	-88		
	2XF	linen	-90		
	4MM	plum red	-88		
	7VM	silver-grey	-88		
	1VD	champagne	-88		
	5UM	caramel	-90		
	3KM	venetian blue	-90		
	8UT	cashmere beige	89-		
	7VT	silk grey	89-90		
	9MT	velvet red	89-90		
	3WT	slate grey	89-90		
	4XR	classic grey	91		
	4ZN	cobalt blue	91		
	8WZ	magenta	91		
	6YR	light grey	91		
	M33	matador red	91		
	D13	carrara grey	91		
	J23	sherwood green	91		
(8)	928 551 031 07	lining side member	/LL/L-89	1	
	70E	black	-88		
	5FV	black	89-		
	5MF	mahogany	-90		
	3KF	marine blue	-88		
	4KV	marine blue	89-		
	80E	burgundy	-88		

Pos	Part Number	Name	Remarks	Qty	Model
	8MD	burgundy	89-90		
	8JK	greyish green	-88		
	2XF	linen	-90		
	4MM	plum red	-88		
	7VM	silver-grey	-88		
	1VD	champagne	-88		
	5UM	caramel	-90		
	3KM	venetian blue	-90		
	8UT	cashmere beige	89-		
	7VT	silk grey	89-90		
	9MT	velvet red	89-90		
	3WT	slate grey	89-90		
(8)	928 551 031 08	lining side member	/LL/L90-	1	
	5FV	black	89-		
	5MF	mahogany	-90		
	4KV	marine blue	89-		
	8MD	burgundy	89-90		
	2XF	linen	-90		
	5UM	caramel	-90		
	3KM	venetian blue	-90		
	8UT	cashmere beige	89-		
	7VT	silk grey	89-90		
	9MT	velvet red	89-90		
	3WT	slate grey	89-90		
	4XR	classic grey	91		
	4ZN	cobalt blue	91		
	8WZ	magenta	91		

Pos	Part Number	Name	Remarks	Qty	Model
	6YR	light grey	91		
	M33	matador red	91		
	D13	carrara grey	91		
	J23	sherwood green	91		
8	928 551 032 07	lining side member	/LL/R-89	1	
	70E	black	-88		
	5FV	black	89-		
	5MF	mahogany	-90		
	3KF	marine blue	-88		
	4KV	marine blue	89-		
	80E	burgundy	-88		
	8MD	burgundy	89-90		
	8JK	greyish green	-88		
	2XF	linen	-90		
	4MM	plum red	-88		
	7VM	silver-grey	-88		
	1VD	champagne	-88		
	5UM	caramel	-90		
	3KM	venetian blue	-90		
	8UT	cashmere beige	89-		
	7VT	silk grey	89-90		
	9MT	velvet red	89-90		
	3WT	slate grey	89-90		
(8)	928 551 032 08	lining side member	/LL/R90-	1	
	5FV	black	89-		
	5MF	mahogany	-90		

Pos	Part Number	Name	Remarks	Qty	Model
	4KV	marine blue	89-		
	8MD	burgundy	89-90		
	2XF	linen	-90		
	5UM	caramel	-90		
	3KM	venetian blue	-90		
	8UT	cashmere beige	89-		
	7VT	silk grey	89-90		
	9MT	velvet red	89-90		
	3WT	slate grey	89-90		
	4XR	classic grey	91		
	4ZN	cobalt blue	91		
	8WZ	magenta	91		
	6YR	light grey	91		
	M33	matador red	91		
	D13	carrara grey	91		
	J23	sherwood green	91		
9	928 551 091 02	lining parking-brake cable	/LL	1	
	70E	black	-88		
	5FV	black	89-		
	5MF	mahogany	-90		
	3KF	marine blue	-88		
	4KV	marine blue	89-		
	80E	burgundy	-88		
	8MD	burgundy	89-90		
	8JK	greyish green	-88		
	2XF	linen	-90		
	4MM	plum red	-88		

Pos	Part Number	Name	Remarks	Qty	Model
	7VM	silver-grey	-88		
	1VD	champagne	-88		
	5UM	caramel	-90		
	3KM	venetian blue	-90		
	8UT	cashmere beige	89-		
	7VT	silk grey	89-90		
	9MT	velvet red	89-90		
	3WT	slate grey	89-90		
	4XR	classic grey	91		
	4ZN	cobalt blue	91		
	8WZ	magenta	91		
	6YR	light grey	91		
	M33	matador red	91		
	D13	carrara grey	91		
	J23	sherwood green	91		
	L03	scala red	91		
	A43	greenwich grey	91		
(9)	927 551 091 02	lining parking-brake cable	/RL	1	
	70E	black	-88		
	5FV	black	89-		
	5MF	mahogany	-90		
	3KF	marine blue	-88		
	4KV	marine blue	89-		
	80E	burgundy	-88		
	8MD	burgundy	89-90		
	8JK	greyish green	-88		
	2XF	linen	-90		

Pos	Part Number	Name	Remarks	Qty	Model
	4MM	plum red	-88		
	7VM	silver-grey	-88		
	1VD	champagne	-88		
	5UM	caramel	-90		
	3KM	venetian blue	-90		
	8UT	cashmere beige	89-		
	7VT	silk grey	89-90		
	9MT	velvet red	89-90		
	3WT	slate grey	89-90		
	4XR	classic grey	91		
	4ZN	cobalt blue	91		
	8WZ	magenta	91		
	6YR	light grey	91		
	M33	matador red	91		
	D13	carrara grey	91		
	J23	sherwood green	91		
	L03	scala red	91		
	A43	greenwich grey	91		
10	928 551 089 04	lining handbrake	/LL -89	1	
	70E	black	-88		
	5FV	black	89-		
	5MF	mahogany	-90		
	3KF	marine blue	-88		
	4KV	marine blue	89-		
	80E	burgundy	-88		
	8MD	burgundy	89-90		
	8JK	greyish green	-88		

Pos	Part Number	Name	Remarks	Qty	Model
	2XF	linen	-90		
	4MM	plum red	-88		
	7VM	silver-grey	-88		
	1VD	champagne	-88		
	5UM	caramel	-90		
	3KM	venetian blue	-90		
	8UT	cashmere beige	89-		
	7VT	silk grey	89-90		
	9MT	velvet red	89-90		
	3WT	slate grey	89-90		
(10)	928 551 089 06	lining handbrake	/LL88-89	1	M 637
	70E	black	-88		
	5FV	black	89-		
	5MF	mahogany	-90		
	3KF	marine blue	-88		
	4KV	marine blue	89-		
	80E	burgundy	-88		
	8MD	burgundy	89-90		
	8JK	greyish green	-88		
	2XF	linen	-90		
	4MM	plum red	-88		
	7VM	silver-grey	-88		
	1VD	champagne	-88		
	5UM	caramel	-90		
	3KM	venetian blue	-90		
	8UT	cashmere beige	89-		
	7VT	silk grey	89-90		

Pos	Part Number	Name	Remarks	Qty	Model
	9MT	velvet red	89-90		
	3WT	slate grey	89-90		
(10)	928 551 089 08	lining handbrake	/LL 90	1	
	5FV	black	89-		
	5MF	mahogany	-90		
	4KV	marine blue	89-		
	8MD	burgundy	89-90		
	2XF	linen	-90		
	5UM	caramel	-90		
	3KM	venetian blue	-90		
	8UT	cashmere beige	89-		
	7VT	silk grey	89-90		
	9MT	velvet red	89-90		
	3WT	slate grey	89-90		
(10)	928 551 089 10	lining handbrake	/LL 91	1	
	5FV	black	89-		
	4KV	marine blue	89-		
	8UT	cashmere beige	89-		
	4XR	classic grey	91		
	4ZN	cobalt blue	91		
	8WZ	magenta	91		
	6YR	light grey	91		
	M33	matador red	91		
	D13	carrara grey	91		
	J23	sherwood green	91		
	L03	scala red	91		

Pos	Part Number	Name	Remarks	Qty	Model
	A43	greenwich grey	91		
10	928 551 089 05	lining handbrake	/LL -89	1	(J)
	70E	black	-88		
	5FV	black	89-		
	5MF	mahogany	-90		
	3KF	marine blue	-88		
	4KV	marine blue	89-		
	80E	burgundy	-88		
	8MD	burgundy	89-90		
	8JK	greyish green	-88		
	2XF	linen	-90		
	4MM	plum red	-88		
	7VM	silver-grey	-88		
	1VD	champagne	-88		
	5UM	caramel	-90		
	3KM	venetian blue	-90		
	8UT	cashmere beige	89-		
	7VT	silk grey	89-90		
	9MT	velvet red	89-90		
	3WT	slate grey	89-90		
(10)	928 551 089 09	lining handbrake	/LL 90	1	(J)
	5FV	black	89-		
	5MF	mahogany	-90		
	4KV	marine blue	89-		
	8MD	burgundy	89-90		
	2XF	linen	-90		

Pos	Part Number	Name	Remarks	Qty	Model
	5UM	caramel	-90		
	3KM	venetian blue	-90		
	8UT	cashmere beige	89-		
	7VT	silk grey	89-90		
	9MT	velvet red	89-90		
	3WT	slate grey	89-90		
(10)	928 551 089 11	lining handbrake	/LL 91	1	(J)
	5FV	black	89-		
	4KV	marine blue	89-		
	8UT	cashmere beige	89-		
	4XR	classic grey	91		
	4ZN	cobalt blue	91		
	8WZ	magenta	91		
	6YR	light grey	91		
	M33	matador red	91		
	D13	carrara grey	91		
	J23	sherwood green	91		
	L03	scala red	91		
	A43	greenwich grey	91		
(10)	928 551 089 07	lining handbrake	/LL88-89	1	M 637 (J)
	70E	black	-88		
	5FV	black	89-		
	5MF	mahogany	-90		
	3KF	marine blue	-88		
	4KV	marine blue	89-		
	80E	burgundy	-88		
	8MD	burgundy	89-90		
	8JK	greyish green	-88		
	2XF	linen	-90		
	4MM	plum red	-88		
	7VM	silver-grey	-88		
	1VD	champagne	-88		
	5UM	caramel	-90		
	3KM	venetian blue	-90		
	8UT	cashmere beige	89-		
	7VT	silk grey	89-90		
	9MT	velvet red	89-90		
	3WT	slate grey	89-90		
10	927 551 089 04	lining handbrake	/RL -89	1	
	70E	black	-88		
	5FV	black	89-		
	5MF	mahogany	-90		
	3KF	marine blue	-88		
	4KV	marine blue	89-		
	80E	burgundy	-88		
	8MD	burgundy	89-90		
	8JK	greyish green	-88		
	2XF	linen	-90		
	4MM	plum red	-88		
	7VM	silver-grey	-88		
	1VD	champagne	-88		
	5UM	caramel	-90		
	3KM	venetian blue	-90		

Pos	Part Number	Name	Remarks	Qty	Model
	8UT	cashmere beige	89-		
	7VT	silk grey	89-90		
	9MT	velvet red	89-90		
	3WT	slate grey	89-90		
(10)	927 551 089 05	lining handbrake	/RL 90	1	
	5FV	black	89-		
	5MF	mahogany	-90		
	4KV	marine blue	89-		
	8MD	burgundy	89-90		
	2XF	linen	-90		
	5UM	caramel	-90		
	3KM	venetian blue	-90		
	8UT	cashmere beige	89-		
	7VT	silk grey	89-90		
	9MT	velvet red	89-90		
	3WT	slate grey	89-90		
(10)	927 551 089 06	lining handbrake	/RL 91	1	
	5FV	black	89-		
	4KV	marine blue	89-		
	8UT	cashmere beige	89-		
	4XR	classic grey	91		
	4ZN	cobalt blue	91		
	8WZ	magenta	91		
	6YR	light grey	91		
	M33	matador red	91		
	D13	carrara grey	91		

Pos	Part Number	Name	Remarks	Qty	Model
	J23	sherwood green	91		
	L03	scala red	91		
	A43	greenwich grey	91		
11	928 551 325 02	rose	-90	1	
	70B	black			
(11)	928 551 325 03	rose	91	1	
	70B	black			
12	900 143 001 02	tapping screw B 2,9 X 6,5		2	
13	928 551 087 03	plate	-89	1	
14	928 551 035 02	lining foot support	/LL -89	1	
	70E	black	-88		
	5FV	black	89-		
	5MF	mahogany	-90		
	3KF	marine blue	-88		
	4KV	marine blue	89-		
	80E	burgundy	-88		
	8MD	burgundy	89-90		
	8JK	greyish green	-88		
	2XF	linen	-90		
	4MM	plum red	-88		
	7VM	silver-grey	-88		
	1VD	champagne	-88		
	5UM	caramel	-90		
	3KM	venetian blue	-90		
	8UT	cashmere beige	89-		
	7VT	silk grey	89-90		

Pos	Part Number	Name	Remarks	Qty	Model
	9MT	velvet red	89-90		
	3WT	slate grey	89-90		
(14)	928 551 035 03	lining foot support	/LL 90-	1	
	5FV	black	89-		
	5MF	mahogany	-90		
	4KV	marine blue	89-		
	8MD	burgundy	89-90		
	2XF	linen	-90		
	5UM	caramel	-90		
	3KM	venetian blue	-90		
	8UT	cashmere beige	89-		
	7VT	silk grey	89-90		
	9MT	velvet red	89-90		
	3WT	slate grey	89-90		
	4XR	classic grey	91		
	4ZN	cobalt blue	91		
	8WZ	magenta	91		
	6YR	light grey	91		
	M33	matador red	91		
	D13	carrara grey	91		
	J23	sherwood green	91		
(14)	927 551 036 02	lining foot support	/RL	1	
	70E	black	-88		
	5FV	black	89-		
	5MF	mahogany	-90		
	3KF	marine blue	-88		

Pos	Part Number	Name	Remarks	Qty	Model
	4KV	marine blue	89-		
	80E	burgundy	-88		
	8MD	burgundy	89-90		
	8JK	greyish green	-88		
	2XF	linen	-90		
	4MM	plum red	-88		
	7VM	silver-grey	-88		
	1VD	champagne	-88		
	5UM	caramel	-90		
	3KM	venetian blue	-90		
	8UT	cashmere beige	89-		
	7VT	silk grey	89-90		
	9MT	velvet red	89-90		
	3WT	slate grey	89-90		
	4XR	classic grey	91		
	4ZN	cobalt blue	91		
	8WZ	magenta	91		
	6YR	light grey	91		
	M33	matador red	91		
	D13	carrara grey	91		
	J23	sherwood green	91		
15	928 551 073 06	clip	/LL -89	2	
(15)	927 551 073 04	clip	/RL	2	
16	927 551 062 05	foot support	/RL -89	1	
(16)	927 551 062 06	foot support	/RL 90-	1	
17	928 551 062 05	foot support	/LL -89	1	
(17)	928 551 062 06	foot support	/LL 90-	1	

Pos	Part Number	Name	Remarks	Qty	Model
17A	999 703 369 40	plug 6,9 - 7,1	/LL 90-	2	
18	928 551 066 03	foot support	/LL -89	1	
19	928 551 049 02	lining firewall	/LL	1	
	70E	black	-88		
	5FV	black	89-		
	5MF	mahogany	-90		
	3KF	marine blue	-88		
	4KV	marine blue	89-		
	80E	burgundy	-88		
	8MD	burgundy	89-90		
	8JK	greyish green	-88		
	2XF	linen	-90		
	4MM	plum red	-88		
	7VM	silver-grey	-88		
	1VD	champagne	-88		
	5UM	caramel	-90		
	3KM	venetian blue	-90		
	8UT	cashmere beige	89-		
	7VT	silk grey	89-90		
	9MT	velvet red	89-90		
	3WT	slate grey	89-90		
	4XR	classic grey	91		
	4ZN	cobalt blue	91		
	8WZ	magenta	91		
	6YR	light grey	91		
	M33	matador red	91		
	D13	carrara grey	91		
	J23	sherwood green	91		
(19)	927 551 050 02	lining firewall	/RL	1	
	70E	black	-88		
	5FV	black	89-		
	5MF	mahogany	-90		
	3KF	marine blue	-88		
	4KV	marine blue	89-		
	80E	burgundy	-88		
	8MD	burgundy	89-90		
	8JK	greyish green	-88		
	2XF	linen	-90		
	4MM	plum red	-88		
	7VM	silver-grey	-88		
	1VD	champagne	-88		
	5UM	caramel	-90		
	3KM	venetian blue	-90		
	8UT	cashmere beige	89-		
	7VT	silk grey	89-90		
	9MT	velvet red	89-90		
	3WT	slate grey	89-90		
	4XR	classic grey	91		
	4ZN	cobalt blue	91		
	8WZ	magenta	91		
	6YR	light grey	91		
	M33	matador red	91		
	D13	carrara grey	91		

Pos	Part Number	Name	Remarks	Qty	Model
	J23	sherwood green	91		
20	928 551 505 06	cover	/LL	1	
	70E	black	-88		
	5FV	black	89-		
	5MF	mahogany	-90		
	3KF	marine blue	-88		
	4KV	marine blue	89-		
	80E	burgundy	-88		
	8MD	burgundy	89-90		
	8JK	greyish green	-88		
	2XF	linen	-90		
	4MM	plum red	-88		
	7VM	silver-grey	-88		
	1VD	champagne	-88		
	5UM	caramel	-90		
	3KM	venetian blue	-90		
	8UT	cashmere beige	89-		
	7VT	silk grey	89-90		
	9MT	velvet red	89-90		
	3WT	slate grey	89-90		
	4XR	classic grey	91		
	4ZN	cobalt blue	91		
	8WZ	magenta	91		
	6YR	light grey	91		
	M33	matador red	91		
	D13	carrara grey	91		
	J23	sherwood green	91		

Pos	Part Number	Name	Remarks	Qty	Model
(20)	928 551 505 07	cover	/LL88-89	1	M 637
	70E	black	-88		
	5FV	black	89-		
	5MF	mahogany	-90		
	3KF	marine blue	-88		
	4KV	marine blue	89-		
	80E	burgundy	-88		
	8MD	burgundy	89-90		
	8JK	greyish green	-88		
	2XF	linen	-90		
	4MM	plum red	-88		
	7VM	silver-grey	-88		
	1VD	champagne	-88		
	5UM	caramel	-90		
	3KM	venetian blue	-90		
	8UT	cashmere beige	89-		
	7VT	silk grey	89-90		
	9MT	velvet red	89-90		
	3WT	slate grey	89-90		
(20)	927 551 505 06	cover	/RL	1	
	70E	black	-88		
	5FV	black	89-		
	5MF	mahogany	-90		
	3KF	marine blue	-88		
	4KV	marine blue	89-		
	80E	burgundy	-88		
	8MD	burgundy	89-90		

Pos	Part Number	Name	Remarks	Qty	Model
	8JK	greyish green	-88		
	2XF	linen	-90		
	4MM	plum red	-88		
	7VM	silver-grey	-88		
	1VD	champagne	-88		
	5UM	caramel	-90		
	3KM	venetian blue	-90		
	8UT	cashmere beige	89-		
	7VT	silk grey	89-90		
	9MT	velvet red	89-90		
	3WT	slate grey	89-90		
	4XR	classic grey	91		
	4ZN	cobalt blue	91		
	8WZ	magenta	91		
	6YR	light grey	91		
	M33	matador red	91		
	D13	carrara grey	91		
	J23	sherwood green	91		
21	999 058 001 00	knurled screw M 6 X 10		2	
22	928 556 045 03	spare wheel covering	-89	1	
(22)	928 556 045 04	spare wheel covering	90-	1	
23	928 555 615 02	spacer sleeve		8	
24	477 885 761	holder		4	
25	900 269 050 07	countersunk-head screw M 5 X 25		8	
26	928 551 081 06	plate for tools rear	-90	1	
	70E	black	-88		

Pos	Part Number	Name	Remarks	Qty	Model
	5FV	black	89-90		
	5MF	mahogany	-90		
	3KF	marine blue	-88		
	4KV	marine blue	89-		
	80E	burgundy	-88		
	8MD	burgundy	89-90		
	8JK	greyish green	-88		
	2XF	linen	-90		
	4MM	plum red	-88		
	7VM	silver-grey	-88		
	1VD	champagne	-88		
	5UM	caramel	-90		
	3KM	venetian blue	-90		
	8UT	cashmere beige	89-90		
	7VT	silk grey	89-90		
	9MT	velvet red	89-90		
	3WT	slate grey	89-90		
(26)	928 551 081 08	plate for tools rear	91	1	
	5FV	black			
	8UT	cashmere beige			
	4XR	classic grey			
	4ZN	cobalt blue			
	8WZ	magenta			
	6YR	light grey			
	M33	matador red			
	D13	carrara grey			
	J23	sherwood green			

Pos	Part Number	Name	Remarks	Qty	Model
	4KV	marine blue			
27	928 551 221 02	knob		2	
28	999 591 483 40	lock washer		2	
29	928 551 199 02	cap		2	
30	928 551 203 02	cam		2	
31	928 551 653 02	lining terminal piece		1	
	70E	black	-88		
	5FV	black	89-		
	5MF	mahogany	-90		
	3KF	marine blue	-88		
	4KV	marine blue	89-		
	80E	burgundy	-88		
	8MD	burgundy	89-90		
	8JK	greyish green	-88		
	2XF	linen	-90		
	4MM	plum red	-88		
	7VM	silver-grey	-88		
	1VD	champagne	-88		
	5UM	caramel	-90		
	3KM	venetian blue	-90		
	8UT	cashmere beige	89-		
	7VT	silk grey	89-90		
	9MT	velvet red	89-90		
	3WT	slate grey	89-90		
	4XR	classic grey	91		
	4ZN	cobalt blue	91		
	8WZ	magenta	91		

Pos	Part Number	Name	Remarks	Qty	Model
	6YR	light grey	91		
	M33	matador red	91		
	D13	carrara grey	91		
	J23	sherwood green	91		
(32)	928 551 185 02	rubber stop	/L	1	
	70B	black			
(32)	928 551 186 02	rubber stop	/R	1	
	70B	black			
33	928 504 105 02	gasket for cover		1	
34	928 504 107 02	sealing rubber for battery cover		1	
35	928 555 021 07	side trim panel with loudspeaker opening leatherette	/L -88	1	
	05T	black			
	1MX	mahogany			
	1KX	marine blue			
	3MX	burgundy			
	4JX	greyish green			
(35)	928 555 022 07	side trim panel with loudspeaker opening leatherette	/R -88	1	
	05T	black			
	1MX	mahogany			
	1KX	marine blue			
	3MX	burgundy			
	4JX	greyish green			

Pos	Part Number	Name	Remarks	Qty	Model
(35)	928 555 921 00	side trim panel with loudspeaker opening leatherette	/L -88	1	M 490
	05T	black			
	1MX	mahogany			
	1KX	marine blue			
	3MX	burgundy			
	4JX	greyish green			
(35)	928 555 922 00	side trim panel with loudspeaker opening leatherette	/R -88	1	M 490
	05T	black			
	1MX	mahogany			
	1KX	marine blue			
	3MX	burgundy			
	4JX	greyish green			
(35)	928 555 921 02	side trim panel with loudspeaker opening leatherette	/L 89-90	1	
	70A	black			
	1MX	mahogany			
	1KX	marine blue			
	3MX	burgundy			
(35)	928 555 922 02	side trim panel with loudspeaker opening leatherette	/R 89-90	1	
	70A	black			
	1MX	mahogany			
	1KX	marine blue			
	3MX	burgundy			
(35)	928 555 921 02	side trim panel with loudspeaker opening leatherette	/L 91	1	
	70A	black			
	2WJ	classic grey			
	9ZH	cobalt blue			
	4WY	magenta			
(35)	928 555 922 02	side trim panel with loudspeaker opening leatherette	/R 91	1	
	70A	black			
	2WJ	classic grey			
	9ZH	cobalt blue			
	4WY	magenta			
(35)	928 555 021 57	side trim panel with loudspeaker opening leather	/L -88	1	
	KZ2	black			
	TV1	mahogany			
	TS1	marine blue			
	LG7	burgundy			
	QC2	greyish green			
	UD5	caramel			
	UD6	venetian blue			
(35)	928 555 022 57	side trim panel with loudspeaker opening leather	/R -88	1	
	KZ2	black			
	TV1	mahogany			
	TS1	marine blue			
	LG7	burgundy			

Pos	Part Number	Name	Remarks	Qty	Model
	QC2	greyish green			
	UD5	caramel			
	UD6	venetian blue			
(35)	928 555 921 01	side trim panel with loudspeaker opening leather	/L -88	1	M 490
	KZ2	black			
	TV1	mahogany			
	TS1	marine blue			
	LG7	burgundy			
	QC2	greyish green			
	UD5	caramel			
	UD6	venetian blue			
(35)	928 555 922 01	side trim panel with loudspeaker opening leather	/R -88	1	M 490
	KZ2	black			
	TV1	mahogany			
	TS1	marine blue			
	LG7	burgundy			
	QC2	greyish green			
	UD5	caramel			
	UD6	venetian blue			
(35)	928 555 921 03	side trim panel with loudspeaker opening leather	/L 89-90	1	M 680
	KZ2	black			
	TV1	mahogany			
	TS1	marine blue			
	LG7	burgundy			
	4MT	velvet red			
	2WT	slate grey			
	UD5	caramel			
	UD6	venetian blue			
(35)	928 555 922 03	side trim panel with loudspeaker opening leather	/R 89-90	1	M 680
	KZ2	black			
	TV1	mahogany			
	TS1	marine blue			
	LG7	burgundy			
	4MT	velvet red			
	2WT	slate grey			
	UD5	caramel			
	UD6	venetian blue			
(35)	928 555 921 03	side trim panel with loudspeaker opening leather	/L 91	1	M 680
	8YR	black			
	6XL	classic grey			
	9YL	cobalt blue			
	6YL	magenta			
	M05	matador red			
	D35	carrara grey			
	J25	sherwood green			
	H05	marine blue			
(35)	928 555 922 03	side trim panel with loudspeaker opening leather	/R 91	1	M 680
	8YR	black			

Pos	Part Number	Name	Remarks	Qty	Model
	6XL	classic grey			
	9YL	cobalt blue			
	6YL	magenta			
	M05	matador red			
	D35	carrara grey			
	J25	sherwood green			
	H05	marine blue			
36	928 555 275 04	rose	/L	1	
	70B	black			
(36)	928 555 276 04	rose	/R	1	
	70B	black			
37	900 143 007 02	tapping screw B 4,2 X 13		4	
38	-	see group 8/09/15 POS.9		2	
39	-	see group 8/09/15 POS.10		2	
40	928 555 469 03	knob for coat hook		2	
41	900 145 091 07	tapping screw B 4,8 X 32		2	
42	999 591 102 07	protection washer		5	
43	900 145 062 07	tapping screw B 3,5 X 25		5	
44	823 867 299	clip		6	
-	928 555 631 02	luggage net		1	
46	A 928 551 911 01	floor mat	/LL/L-88	1	
	70A	black			
	40A	brown			
(46)	A 928 551 912 01	floor mat	/LL/R-88	1	
	70A	black			
	40A	brown			
47	928 551 099 00	cover	-89	1	M 293/295/ M 496
	70E	black	-88		
	5FV	black	89-		
	5MF	mahogany	-90		
	3KF	marine blue	-88		
	4KV	marine blue	89		
	80E	burgundy	-88		
	8MD	burgundy	89		
	8JK	greyish green	-88		
	2XF	linen	-90		
	4MM	plum red	-88		
	7VM	silver-grey	-88		
	1VD	champagne	-88		
	5UM	caramel	-90		
	3KM	venetian blue	-90		
	8UT	cashmere beige	89-		
	7VT	silk grey	89-90		
	9MT	velvet red	89-90		
	3WT	slate grey	89-90		
(47)	928 551 099 01	cover	-89	1	M 195
	70E	black	-88		
	5FV	black	89-		
	5MF	mahogany	-90		
	3KF	marine blue	-88		
	4KV	marine blue	89-90		

Pos	Part Number	Name	Remarks	Qty	Model
	80E	burgundy	-88		
	8MD	burgundy	89-90		
	8JK	greyish green	-88		
	2XF	linen	-90		
	4MM	plum red	-88		
	7VM	silver-grey	-88		
	1VD	champagne	-88		
	5UM	caramel	-90		
	3KM	venetian blue	-90		
	8UT	cashmere beige	89-		
	7VT	silk grey	89-90		
	9MT	velvet red	89-90		
	3WT	slate grey	89-90		
48	999 591 957 40	fastening screw cover control units	89-	1	
		- -- E N D -- -			

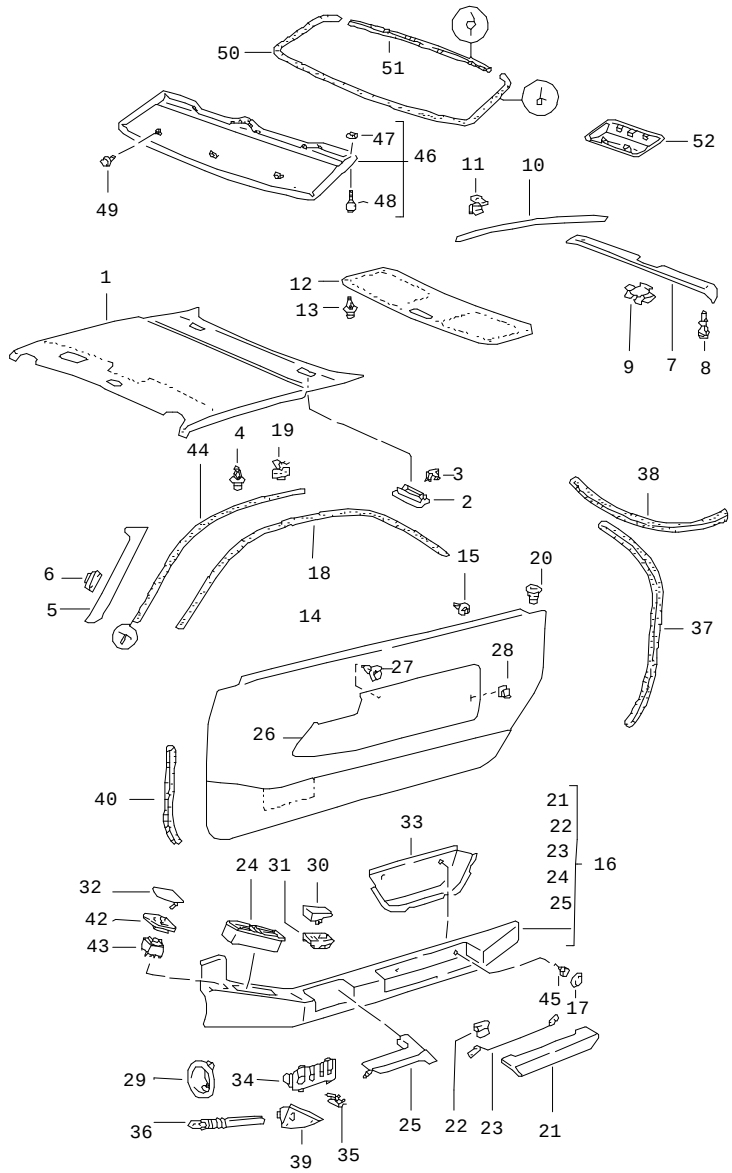

Pos	Part Number	Name	Remarks	Qty	Model
		door trim panel rooflining			
1	928 555 071 08	rooflining leatherette		1	
	70A	black			
	3MX	burgundy	-90		
	2KA	greyish green	-88		
	5MA	mahogany	-90		
	3KA	marine blue			
	6WG	classic grey	91		
	6YU	cobalt blue	91		
	6WW	magenta	91		
(1)	928 555 071 54	rooflining leather		1	
	KZ2	black	-90		
	LG7	burgundy	-90		
	QC2	greyish green	-88		
	TV1	mahogany	-90		
	TS1	marine blue	-90		
	UD5	caramel	-90		
	UD6	venetian blue	-90		
	4MT	velvet red	-90		
	2WT	slate grey	-90		
	8YR	black	91		
	6XL	classic grey	91		
	9YL	cobalt blue	91		
	6YL	magenta	91		
	M05	matador red	91		
	D35	carrara grey	91		

Pos	Part Number	Name	Remarks	Qty	Model
	J25	sherwood green	91		
	H05	marine blue	90-		
(1)	928 555 071 62	rooflining leatherette		1	M 650
	70A	black			
	5MA	mahogany	-90		
	3KA	marine blue			
	3MX	burgundy	-90		
	1JL	greyish green	-88		
	8WL	classic grey	91		
	6YJ	cobalt blue	91		
	6WZ	magenta	91		
(1)	928 555 071 63	rooflining leather	-90	1	M 650
	KZ2	black			
	TV1	mahogany			
	TS1	marine blue			
	LG7	burgundy			
	QC2	greyish green			
	UD5	caramel			
	UD6	venetian blue			
(1)	928 555 071 63	rooflining leather	91	1	M 650
	8YR	black			
	6XL	classic grey			
	9YL	cobalt blue			
	6YL	magenta			
	M05	matador red			
	D35	carrara grey			

Pos	Part Number	Name	Remarks	Qty	Model
	J25	sherwood green			
	H05	marine blue			
2	928 555 355 02	cap	-89	2	
(2)	928 555 254 50	cap	90-	2	
	1AJ	black	90		
	2LX	mahogany	90		
	7JX	marine blue	90		
	7LD	burgundy	90		
	4MT	velvet red	90		
	2WT	slate grey	90		
	4UC	caramel	90		
	7KC	venetian blue	90		
	8YR	black	91		
	6XL	classic grey	91		
	9YL	cobalt blue	91		
	6YL	magenta	91		
	M05	matador red	91		
	D35	carrara grey	91		
	J25	sherwood green	91		
	H05	marine blue			
3	928 555 365 03	spring clamp		4	
4	823 867 299	clip		15	
-	999 591 559 40	clip		10	M 650
5	928 555 073 02	lining windscreen frame leatherette	/L	1	
	70A	black			
	3MX	burgundy	-90		

Pos	Part Number	Name	Remarks	Qty	Model
	4JX	greyish green	-88		
	1MX	mahogany	-90		
	1KX	marine blue			
	9WH	classic grey	91		
	7YG	cobalt blue	91		
	9YF	magenta	91		
(5)	928 555 074 02	lining windscreen frame leatherette	/R	1	
	70A	black			
	3MX	burgundy	-90		
	4JX	greyish green	-88		
	1MX	mahogany	-90		
	1KX	marine blue			
	9WH	classic grey	91		
	7YG	cobalt blue	91		
	9YF	magenta	91		
(5)	928 555 251 50	lining windscreen frame leather	/L -90	1	
	KZ2	black	-90		
	LG7	burgundy	-90		
	QC2	greyish green	-88		
	TV1	mahogany	-90		
	TS1	marine blue	-90		
	UD5	caramel	-90		
	UD6	venetian blue	-90		
	4MT	velvet red	89-90		
	2WT	slate grey	89-90		

Pos	Part Number	Name	Remarks	Qty	Model
5	928 555 252 50	lining windscreen frame leather	/R -90	1	
	KZ2	black	-90		
	LG7	burgundy	-90		
	QC2	greyish green	-88		
	TV1	mahogany	-90		
	TS1	marine blue	-90		
	UD5	caramel	-90		
	UD6	venetian blue	-90		
	4MT	velvet red	89-90		
	2WT	slate grey	89-90		
(5)	928 555 251 51	lining windscreen frame leather	/L 91	1	
	8YR	black			
	6XL	classic grey			
	9YL	cobalt blue			
	6YL	magenta			
	M05	matador red			
	D35	carrara grey			
	J25	sherwood green			
	H05	marine blue			
(5)	928 555 252 51	lining windscreen frame leather	/R 91	1	
	8YR	black			
	6XL	classic grey			
	9YL	cobalt blue			
	6YL	magenta			

Pos	Part Number	Name	Remarks	Qty	Model
	M05	matador red			
	D35	carrara grey			
	J25	sherwood green			
	H05	marine blue			
6	999 591 749 02	clamp		4	
7	928 555 047 05	lining cover lower leatherette	/H	1	
	5CT	black	-90		
	1MA	burgundy	-90		
	1JL	greyish green	-88		
	5MA	mahogany	-90		
	3KA	marine blue			
	8WL	classic grey	91		
	6YJ	cobalt blue	91		
	6WZ	magenta	91		
7	928 555 047 53	lining cover lower leather	/H	1	
	KZ2	black	-90		
	LG7	burgundy	-90		
	QC2	greyish green	-88		
	TV1	mahogany	-90		
	TS1	marine blue	-90		
	UD5	caramel	-90		
	UD6	venetian blue	-90		
	4MT	velvet red	89-90		
	2WT	slate grey	89-90		

Pos	Part Number	Name	Remarks	Qty	Model
	8YR	black	91		
	6XL	classic grey	91		
	9YL	cobalt blue	91		
	6YL	magenta	91		
	M05	matador red	91		
	D35	carrara grey	91		
	J25	sherwood green	91		
	H05	marine blue	91		
8	999 591 564 40	expansion rivet black		8	
9	928 555 438 02	clamp		5	
10	928 555 037 02	lining cover lateral leatherette	/L	1	
	5CT	black			
	1MA	burgundy	-90		
	1JL	greyish green	-88		
	5MA	mahogany	-90		
	3KA	marine blue			
	8WL	classic grey	91		
	6YJ	cobalt blue	91		
	6WZ	magenta	91		
(10)	928 555 038 02	lining cover lateral leatherette	/R	1	
	5CT	black			
	1MA	burgundy	-90		
	1JL	greyish green	-88		
	5MA	mahogany	-90		

Pos	Part Number	Name	Remarks	Qty	Model
	3KA	marine blue			
	8WL	classic grey	91		
	6YJ	cobalt blue	91		
	6WZ	magenta	91		
(10)	928 555 037 50	lining cover lateral leather	/L	1	
	KZ2	black	-90		
	LG7	burgundy	-90		
	QC2	greyish green	-88		
	TV1	mahogany	-90		
	TS1	marine blue	-90		
	UD5	caramel	-90		
	UD6	venetian blue	-90		
	4MT	velvet red	89-90		
	2WT	slate grey	89-90		
	8YR	black	91		
	6XL	classic grey	91		
	9YL	cobalt blue	91		
	6YL	magenta	91		
	M05	matador red	91		
	D35	carrara grey	91		
	J25	sherwood green	91		
	H05	marine blue	91		
(10)	928 555 038 50	lining cover lateral leather	/R	1	
	KZ2	black	-90		
	LG7	burgundy	-90		
	QC2	greyish green	-88		
	TV1	mahogany	-90		
	TS1	marine blue	-90		
	UD5	caramel	-90		
	UD6	venetian blue	-90		
	4MT	velvet red	89-90		
	2WT	slate grey	89-90		
	8YR	black	91		
	6XL	classic grey	91		
	9YL	cobalt blue	91		
	6YL	magenta	91		
	M05	matador red	91		
	D35	carrara grey	91		
	J25	sherwood green	91		
	H05	marine blue	91		
11	928 555 437 02	clamp		12	
12	928 555 527 02	lining cover upper leatherette	/H	1	
	5CT	black			
	1MA	burgundy	-90		
	1JL	greyish green	-88		
	5MA	mahogany	-90		
	3KA	marine blue			
	8WL	classic grey	91		
	6YJ	cobalt blue	91		
	6WZ	magenta	91		

Pos	Part Number	Name	Remarks	Qty	Model
(12)	928 555 527 50	lining cover upper leather	/H	1	
	KZ2	black	-90		
	LG7	burgundy	-90		
	QC2	greyish green	-88		
	TV1	mahogany	-90		
	TS1	marine blue	-90		
	UD5	caramel	-90		
	UD6	venetian blue	-90		
	4MT	velvet red	89-90		
	2WT	slate grey	89-90		
	8YR	black	91		
	6XL	classic grey	91		
	9YL	cobalt blue	91		
	6YL	magenta	91		
	M05	matador red	91		
	D35	carrara grey	91		
	J25	sherwood green	91		
	H05	marine blue	91		
13	999 591 559 40	clip		8	
14	928 555 225 00	door trim panel leatherette/carpet	/L -88	1	
	BB2	black/black			
	JP8	burgundy/burgundy			
	QC6	greyish green/grey-green			
	TY3	mahogany/mahogany			
	TY2	marine blue/marine blue			
	TY4	black/linen			
	TY6	mahogany/linen			
	TY5	marine blue/linen			
	TY7	burgundy/linen			
	TY8	greyish green/linen			
(14)	928 555 226 00	door trim panel leatherette/carpet	/R -88	1	
	BB2	black/black			
	JP8	burgundy/burgundy			
	QC6	greyish green/grey-green			
	TY3	mahogany/mahogany			
	TY2	marine blue/marine blue			
	TY4	black/linen			
	TY6	mahogany/linen			
	TY5	marine blue/linen			
	TY7	burgundy/linen			
	TY8	greyish green/linen			
14	928 555 225 02	door trim panel leatherette/carpet	/L 89-90	1	
	SM3	black/black			
	TY3	mahogany/mahogany			
	SM5	marine blue/marine blue			
	SM7	burgundy/burgundy			
	TY4	black/linen			
	TY6	mahogany/linen			
	TY5	marine blue/linen			
	TY7	burgundy/linen			
	SL2	black/cashmere beige			

Pos	Part Number	Name	Remarks	Qty	Model
	SL3	marine blue/cashmere beige			
(14)	928 555 226 02	door trim panel leatherette/carpet	/R 89-90	1	
	SM3	black/black			
	TY3	mahogany/mahogany			
	SM5	marine blue/marine blue			
	SM7	burgundy/burgundy			
	TY4	black/linen			
	TY6	mahogany/linen			
	TY5	marine blue/linen			
	TY7	burgundy/linen			
	SL2	black/cashmere beige			
	SL3	marine blue/cashmere beige			
(14)	928 555 225 01	door trim panel leatherette/carpet	/L -88	1	M 490
	BB2	black/black			
	JP8	burgundy/burgundy			
	QC6	greyish green/grey-green			
	TY3	mahogany/mahogany			
	TY2	marine blue/marine blue			
	TY4	black/linen			
	TY6	mahogany/linen			
	TY5	marine blue/linen			
	TY7	burgundy/linen			
	TY8	greyish green/linen			
(14)	928 555 226 01	door trim panel leatherette/carpet	/R -88	1	M 490
	BB2	black/black			
	JP8	burgundy/burgundy			

Pos	Part Number	Name	Remarks	Qty	Model
	QC6	greyish green/grey-green			
	TY3	mahogany/mahogany			
	TY2	marine blue/marine blue			
	TY4	black/linen			
	TY6	mahogany/linen			
	TY5	marine blue/linen			
	TY7	burgundy/linen			
	TY8	greyish green/linen			
(14)	928 555 225 03	door trim panel leatherette/carpet	/L 89-90	1	M 680
	SM3	black/black			
	TY3	mahogany/mahogany			
	SM5	marine blue/marine blue			
	SM7	burgundy/burgundy			
(14)	928 555 226 03	door trim panel leatherette/carpet	/R 89-90	1	M 680
	SM3	black/black			
	TY3	mahogany/mahogany			
	SM5	marine blue/marine blue			
	SM7	burgundy/burgundy			
(14)	928 555 225 03	door trim panel leatherette/carpet	/L 91	1	
	SM3	black/black			
	SM5	marine blue/marine blue			
	APU	classic grey/classic grey			
	ARU	cobalt blue/cobalt blue			
	ASU	magenta/magenta			
	AQQ	black/light grey			
	APW	classic grey/light grey			

Pos	Part Number	Name	Remarks	Qty	Model
	ARW	cobalt blue/light grey			
	ASW	magenta/light grey			
	SL2	black/cashmere beige			
(14)	928 555 226 03	door trim panel leatherette/carpet	/R 91	1	
	SM3	black/black			
	SM5	marine blue/marine blue			
	APU	classic grey/classic grey			
	ARU	cobalt blue/cobalt blue			
	ASU	magenta/magenta			
	AQQ	black/light grey			
	APW	classic grey/light grey			
	ARW	cobalt blue/light grey			
	ASW	magenta/light grey			
	SL2	black/cashmere beige			
(14)	928 555 225 50	door trim panel leather/carpet	/L -88	1	
	LA2	black/black			
	LL1	burgundy/burgundy			
	QC7	greyish green/grey-green			
	TZ2	mahogany/mahogany			
	TY9	marine blue/marine blue			
	TZ4	black/linen			
	TZ6	mahogany/linen			
	TZ5	marine blue/linen			
	TZ7	burgundy/linen			
	TZ8	greyish green/linen			
	UC3	black/lipstick red			
	UC6	marine blue/lipstick red			
	UC4	black/silver grey			
	UC5	marine blue/silver-grey			
	RV9	black/champagne			
	UC9	marine blue/champagne			
	UC7	caramel/caramel			
	UC8	venetian bl./venetian blue			
(14)	928 555 226 50	door trim panel leather/carpet	/R -88	1	
	LA2	black/black			
	LL1	burgundy/burgundy			
	QC7	greyish green/grey-green			
	TZ2	mahogany/mahogany			
	TY9	marine blue/marine blue			
	TZ4	black/linen			
	TZ6	mahogany/linen			
	TZ5	marine blue/linen			
	TZ7	burgundy/linen			
	TZ8	greyish green/linen			
	UC3	black/lipstick red			
	UC6	marine blue/lipstick red			
	UC4	black/silver grey			
	UC5	marine blue/silver-grey			
	RV9	black/champagne			
	UC9	marine blue/champagne			
	UC7	caramel/caramel			
	UC8	venetian bl./venetian blue			

Pos	Part Number	Name	Remarks	Qty	Model
(14)	928 555 225 52	door trim panel leather/carpet	/L 89-90	1	
	SM4	black/black			
	TZ2	mahogany/mahogany			
	SM6	marine blue/marine blue			
	SM8	burgundy/burgundy			
	TZ4	black/linen			
	TZ6	mahogany/linen			
	TZ5	marine blue/linen			
	TZ7	burgundy/linen			
	SL5	marine blue/cashmere beige			
	SL6	black/silk grey			
	SL7	marine blue/silk grey			
	SL8	velvet red/velvet red			
	SL9	slate grey/slate grey			
	UC7	caramel/caramel			
	UC8	venetian bl./venetian blue			
(14)	928 555 226 52	door trim panel leather/carpet	/R 89-90	1	
	SM4	black/black			
	TZ2	mahogany/mahogany			
	SM6	marine blue/marine blue			
	SM8	burgundy/burgundy			
	TZ4	black/linen			
	TZ6	mahogany/linen			
	TZ5	marine blue/linen			
	TZ7	burgundy/linen			
	SL5	marine blue/cashmere beige			
	SL6	black/silk grey			
	SL7	marine blue/silk grey			
	SL8	velvet red/velvet red			
	SL9	slate grey/slate grey			
	UC7	caramel/caramel			
	UC8	venetian bl./venetian blue			
(14)	928 555 225 51	door trim panel leather/carpet	/L -88	1	M 490
	LA2	black/black			
	LL1	burgundy/burgundy			
	QC7	greyish green/grey-green			
	TZ2	mahogany/mahogany			
	TY9	marine blue/marine blue			
	TZ4	black/linen			
	TZ6	mahogany/linen			
	TZ5	marine blue/linen			
	TZ7	burgundy/linen			
	TZ8	greyish green/linen			
	UC3	black/lipstick red			
	UC6	marine blue/lipstick red			
	UC4	black/silver grey			
	UC5	marine blue/silver-grey			
	RV9	black/champagne			
	UC9	marine blue/champagne			
	UC7	caramel/caramel			
	UC8	venetian bl./venetian blue			
(14)	928 555 226 51	door trim panel leather/carpet	/R -88	1	M 490

Pos	Part Number	Name	Remarks	Qty	Model
	LA2	black/black			
	LL1	burgundy/burgundy			
	QC7	greyish green/grey-green			
	TZ2	mahogany/mahogany			
	TY9	marine blue/marine blue			
	TZ4	black/linen			
	TZ6	mahogany/linen			
	TZ5	marine blue/linen			
	TZ7	burgundy/linen			
	TZ8	greyish green/linen			
	UC3	black/lipstick red			
	UC6	marine blue/lipstick red			
	UC4	black/silver grey			
	UC5	marine blue/silver-grey			
	RV9	black/champagne			
	UC9	marine blue/champagne			
	UC7	caramel/caramel			
	UC8	venetian bl./venetian blue			
(14)	A 928 555 225 23	door trim panel leather/carpet	/L 89-90	1	M 680
	SM4	black/black			
	TZ2	mahogany/mahogany			
	SM6	marine blue/marine blue			
	SM8	burgundy/burgundy			
	TZ4	black/linen			
	TZ6	mahogany/linen			
	TZ5	marine blue/linen			
	TZ7	burgundy/linen			
	SL4	black/cashmere beige			
	SL5	marine blue/cashmere beige			
	SL6	black/silk grey			
	SL7	marine blue/silk grey			
	SL8	velvet red/velvet red			
	SL9	slate grey/slate grey			
	UC7	caramel/caramel			
	UC8	venetian bl./venetian blue			
14	A 928 555 226 23	door trim panel leather/carpet	/R 89-90	1	M 680
	SM4	black/black			
	TZ2	mahogany/mahogany			
	SM6	marine blue/marine blue			
	SM8	burgundy/burgundy			
	TZ4	black/linen			
	TZ6	mahogany/linen			
	TZ5	marine blue/linen			
	TZ7	burgundy/linen			
	SL4	black/cashmere beige			
	SL5	marine blue/cashmere beige			
	SL6	black/silk grey			
	SL7	marine blue/silk grey			
	SL8	velvet red/velvet red			
	SL9	slate grey/slate grey			
	UC7	caramel/caramel			
	UC8	venetian bl./venetian blue			
(14)	928 555 225 53	door trim panel leather/carpet	/L 89-90	1	M 680

Pos	Part Number	Name	Remarks	Qty	Model
	SM4	black/black			
	TZ2	mahogany/mahogany			
	SM6	marine blue/marine blue			
	SM8	burgundy/burgundy			
	TZ4	black/linen			
	TZ6	mahogany/linen			
	TZ5	marine blue/linen			
	TZ7	burgundy/linen			
	SL4	black/cashmere beige			
	SL5	marine blue/cashmere beige			
	SL6	black/silk grey			
	SL7	marine blue/silk grey			
	SL8	velvet red/velvet red			
	SL9	slate grey/slate grey			
	UC7	caramel/caramel			
	UC8	venetian bl./venetian blue			
(14)	928 555 226 53	door trim panel leather/carpet	/R 89-90	1	M 680
	SM4	black/black			
	TZ2	mahogany/mahogany			
	SM6	marine blue/marine blue			
	SM8	burgundy/burgundy			
	TZ4	black/linen			
	TZ6	mahogany/linen			
	TZ5	marine blue/linen			
	TZ7	burgundy/linen			
	SL4	black/cashmere beige			
	SL5	marine blue/cashmere beige			
	SL6	black/silk grey			
	SL7	marine blue/silk grey			
	SL8	velvet red/velvet red			
	SL9	slate grey/slate grey			
	UC7	caramel/caramel			
	UC8	venetian bl./venetian blue			
(14)	928 555 225 53	door trim panel leather/carpet	/L 91	1	
	ATZ	black/black			
	CFQ	marine blue/marine blue			
	APV	classic grey/classic grey			
	ARV	cobalt blue/cobalt blue			
	ASV	magenta/magenta			
	AQR	black/light grey			
	APX	classic grey/light grey			
	ARX	cobalt blue/light grey			
	ASX	magenta/light grey			
	AQS	black/cashmere beige			
	AVA	matador red/matador red			
	AVB	carrara grey/carrara grey			
	AVC	sherwood gr./sherw. green			
(14)	928 555 226 53	door trim panel leather/carpet	/R 91	1	
	ATZ	black/black			
	CFQ	marine blue/marine blue			
	APV	classic grey/classic grey			
	ARV	cobalt blue/cobalt blue			
	ASV	magenta/magenta			

Pos	Part Number	Name	Remarks	Qty	Model
	AQR	black/light grey			
	APX	classic grey/light grey			
	ARX	cobalt blue/light grey			
	ASX	magenta/light grey			
	AQS	black/cashmere beige			
	AVA	matador red/matador red			
	AVB	carrara grey/carrara grey			
	AVC	sherwood gr./sherw. green			
15	823 867 299	clip		4	
(16)	A 928 555 017 03	armrest leatherette	/L -88	1	
	70A	black			
	3MX	burgundy			
	2KA	greyish green			
	5MA	mahogany			
	3KA	marine blue			
16	A 928 555 018 03	armrest leatherette	/R -88	1	
	70A	black			
	3MX	burgundy			
	2KA	greyish green			
	5MA	mahogany			
	3KA	marine blue			
(16)	928 555 101 03	armrest leatherette	/L	1	
	WR4	black			
	WR5	mahogany	-90		
	WR6	marine blue	-91		
	WR7	burgundy	-90		
	WR8	greyish green	-88		
	9WH	classic grey			
	7YG	cobalt blue			
	9YF	magenta			
16	928 555 102 03	armrest leatherette	/R	1	
	WR4	black			
	WR5	mahogany	-90		
	WR6	marine blue	-91		
	WR7	burgundy	-90		
	WR8	greyish green	-88		
	9WH	classic grey			
	7YG	cobalt blue			
	9YF	magenta			
16	A 928 555 049 51	armrest leather	/L -88	1	
	KZ2	black			
	7LD	burgundy			
	QC2	greyish green			
	TV1	mahogany			
	TS1	marine blue			
	UD5	caramel			
	UD6	venetian blue			
(16)	A 928 555 050 51	armrest leather	/R -88	1	
	KZ2	black			
	7LD	burgundy			
	QC2	greyish green			
	TV1	mahogany			

Pos	Part Number	Name	Remarks	Qty	Model
	TS1	marine blue			
	UD5	caramel			
	UD6	venetian blue			
(16)	928 555 101 52	armrest leather	/L	1	
	WS1	black	-90		
	WS2	mahogany	-90		
	WS3	marine blue	-90		
	WS4	burgundy	-90		
	WS5	greyish green	-88		
	WS6	caramel	-90		
	WS7	venetian blue	-90		
	SM1	velvet red	89-90		
	SM2	slate grey	89-90		
	8YR	black	91		
	H05	marine blue			
	6XL	classic grey	91		
	9YL	cobalt blue	91		
	6YL	magenta	91		
(16)	928 555 102 52	armrest leather	/R	1	
	WS1	black	-90		
	WS2	mahogany	-90		
	WS3	marine blue	-90		
	WS4	burgundy	-90		
	WS5	greyish green	-88		
	WS6	caramel	-90		
	WS7	venetian blue	-90		

Pos	Part Number	Name	Remarks	Qty	Model
	SM1	velvet red	89-90		
	SM2	slate grey	89-90		
	8YR	black	91		
	H05	marine blue			
	6XL	classic grey	91		
	9YL	cobalt blue	91		
	6YL	magenta	91		
17	928 555 383 02	cap		4	
(18)	928 555 025 02	lining door frame leatherette	/L	1	
	70A	black			
	3MX	burgundy	-90		
	2KA	greyish green	-88		
	5MA	mahogany	-90		
	3KA	marine blue	-91		
	6WG	classic grey	91		
	6YU	cobalt blue	91		
	6WW	magenta	91		
18	928 555 026 02	lining door frame leatherette	/R	1	
	70A	black			
	3MX	burgundy	-90		
	2KA	greyish green	-88		
	5MA	mahogany	-90		
	3KA	marine blue	-91		
	6WG	classic grey	91		
	6YU	cobalt blue	91		

Pos	Part Number	Name	Remarks	Qty	Model
	6WW	magenta	91		
(18)	928 555 025 50	lining door frame leather	/L	1	
	KZ2	black	-90		
	LG6	dark green	-88		
	QC2	greyish green	-88		
	TV1	mahogany	-90		
	TS1	marine blue	-90		
	UD5	caramel	-90		
	UD6	venetian blue	-90		
	4MT	velvet red	89-90		
	2WT	slate grey	89-90		
	LG7	burgundy	89-90		
	8YR	black	91-		
	6XL	classic grey	91-		
	9YL	cobalt blue	91-		
	6YL	magenta	91-		
	M05	matador red	91-		
	D35	carrara grey	91-		
	J25	sherwood green	91-		
	H05	marine blue			
(18)	928 555 026 50	lining door frame leather	/R	1	
	KZ2	black	-90		
	LG6	dark green	-88		
	QC2	greyish green	-88		
	TV1	mahogany	-90		
	TS1	marine blue	-90		
	UD5	caramel	-90		
	UD6	venetian blue	-90		
	4MT	velvet red	89-90		
	2WT	slate grey	89-90		
	LG7	burgundy	89-90		
	8YR	black	91-		
	6XL	classic grey	91-		
	9YL	cobalt blue	91-		
	6YL	magenta	91-		
	M05	matador red	91-		
	D35	carrara grey	91-		
	J25	sherwood green	91-		
	H05	marine blue			
19	999 591 760 02	clamp		14	
20	928 555 569 02	guide bush		2	
21	928 555 043 03	cover leatherette		2	
	05T	black			
	3MX	burgundy	-90		
	4JX	greyish green	-88		
	1MX	mahogany	-90		
	1KX	marine blue	-91		
	9WH	classic grey	91		
	7YG	cobalt blue	91		
	9YF	magenta	91		
21	928 555 233 50	cover leather		2	

Pos	Part Number	Name	Remarks	Qty	Model
	KZ2	black	-90		
	LL1	burgundy	-90		
	QC2	greyish green	-88		
	TV1	mahogany	-90		
	TS1	marine blue	-90		
	UD5	caramel	-90		
	UD6	venetian blue	-90		
	4MT	velvet red	89-90		
	2WT	slate grey	89-90		
	8YR	black	91		
	6XL	classic grey	91		
	9YL	cobalt blue	91		
	6YL	magenta	91		
	M05	matador red	91		
	D35	carrara grey	91		
	J25	sherwood green	91		
	H05	marine blue			
22	928 555 607 02	adjusting lever		2	
(23)	928 555 553 02	steering linkage	/L	1	
23	928 555 554 02	steering linkage	/R	1	
(24)	928 574 087 03	side vent	/L	1	
24	928 574 088 03	side vent	/R	1	
(25)	928 555 053 04	handle leatherette	/L	1	
	05T	black			
	3MX	burgundy	-90		
	4JX	greyish green	-88		
	1MX	mahogany	-90		
	1KX	marine blue	-91		
	9WH	classic grey	91		
	7YG	cobalt blue	91		
	9YF	magenta	91		
25	928 555 054 04	handle leatherette	/R	1	
	05T	black			
	3MX	burgundy	-90		
	4JX	greyish green	-88		
	1MX	mahogany	-90		
	1KX	marine blue	-91		
	9WH	classic grey	91		
	7YG	cobalt blue	91		
	9YF	magenta	91		
(25)	928 555 267 52	handle leather	/L	1	
	KZ2	black	-90		
	LL1	burgundy	-90		
	QC2	greyish green	-88		
	TV1	mahogany	-90		
	TS1	marine blue	-90		
	UD5	caramel	-90		
	UD6	venetian blue	-90		
	4MT	velvet red	89-90		
	2WT	slate grey	89-90		
	8YR	black	91		
	6XL	classic grey	91		
	9YL	cobalt blue	91		

Pos	Part Number	Name	Remarks	Qty	Model
	6YL	magenta	91		
	M05	matador red	91		
	D35	carrara grey	91		
	J25	sherwood green	91		
	H05	marine blue			
25	928 555 268 52	handle leather	/R	1	
	KZ2	black	-90		
	LL1	burgundy	-90		
	QC2	greyish green	-88		
	TV1	mahogany	-90		
	TS1	marine blue	-90		
	UD5	caramel	-90		
	UD6	venetian blue	-90		
	4MT	velvet red	89-90		
	2WT	slate grey	89-90		
	8YR	black	91		
	6XL	classic grey	91		
	9YL	cobalt blue	91		
	6YL	magenta	91		
	M05	matador red	91		
	D35	carrara grey	91		
	J25	sherwood green	91		
	H05	marine blue			
26	928 555 051 02	cover pin stripe velour	/L -90	1	
	7BN	black-white	-88		
	8GJ	blue-white	-88		
	1MJ	burgundy-white	-88		
	3JV	greyish green-white	-88		
	6LN	mahogany-white	-88		
	2LN	black-red	88		M 637 (GB)
	4TN	cashmere beige-white	89-90		
	7BN	black-white	89-90		
	6LN	mahogany-white	89-90		
	8GJ	blue-white	89-90		
	1MJ	burgundy-white	89-90		
	4WJ	linen white	89-90		
(26)	928 555 052 02	cover pin stripe velour	/R -90	1	
	7BN	black-white	-88		
	8GJ	blue-white	-88		
	1MJ	burgundy-white	-88		
	3JV	greyish green-white	-88		
	6LN	mahogany-white	-88		
	2LN	black-red	88		M 637 (GB)
	4TN	cashmere beige-white	89-90		
	7BN	black-white	89-90		
	6LN	mahogany-white	89-90		
	8GJ	blue-white	89-90		
	1MJ	burgundy-white	89-90		
	4WJ	linen white	89-90		
26	928 555 051 02	cover porsche lettering cloth	/L -90	1	
	2CZ	black	-90		
	6HZ	blue	-90		

Pos	Part Number	Name	Remarks	Qty	Model
	5LZ	burgundy	-90		
	1JK	greyish green	-88		
	4MR	mahogany	-90		
	7TH	cashmere beige	89-90		
	5WZ	linen	89-90		
(26)	928 555 052 02	cover porsche lettering cloth	/R -90	1	
	2CZ	black	-90		
	6HZ	blue	-90		
	5LZ	burgundy	-90		
	1JK	greyish green	-88		
	4MR	mahogany	-90		
	7TH	cashmere beige	89-90		
	5WZ	linen	89-90		
26	928 555 051 02	cover pin stripe flannel	/L -90	1	
	8BF	anthracite	-88		
	6GF	blue	-88		
	1MF	burgundy	-88		
	9JF	greyish green	-88		
	9LF	mahogany	-88		
(26)	928 555 052 02	cover pin stripe flannel	/R -90	1	
	8BF	anthracite	-88		
	6GF	blue	-88		
	1MF	burgundy	-88		
	9JF	greyish green	-88		
	9LF	mahogany	-88		

Pos	Part Number	Name	Remarks	Qty	Model
26	928 555 051 02	cover multicolour	/L -90	1	
	5TC	cashmere beige	89-90		
	2VV	black	89-90		
	8XV	mahogany	89-90		
	9JV	marine blue	89-90		
	1MV	burgundy	89-90		
	6UV	linen	89-90		
(26)	928 555 052 02	cover multicolour	/R -90	1	
	5TC	cashmere beige	89-90		
	2VV	black	89-90		
	8XV	mahogany	89-90		
	9JV	marine blue	89-90		
	1MV	burgundy	89-90		
	6UV	linen	89-90		
26	928 555 051 50	cover leather	/L -90	1	
	KZ2	black	-90		
	LG7	burgundy	-90		
	LG5	champagne	-88		
	QC2	greyish green	-88		
	TV1	mahogany	-90		
	TS1	marine blue	-90		
	TW1	linen	-90		
	UD3	plum red	-88		
	UD4	silver-grey	-88		
	UD5	caramel	-90		
	UD6	venetian blue	-90		

Pos	Part Number	Name	Remarks	Qty	Model
	2WH	cashmere beige	89-90		
	5VT	silk grey	89-90		
	4MT	velvet red	89-90		
	2WT	slate grey	89-90		
(26)	928 555 052 50	cover leather	/R -90	1	
	KZ2	black	-90		
	LG7	burgundy	-90		
	LG5	champagne	-88		
	QC2	greyish green	-88		
	TV1	mahogany	-90		
	TS1	marine blue	-90		
	TW1	linen	-90		
	UD3	plum red	-88		
	UD4	silver-grey	-88		
	UD5	caramel	-90		
	UD6	venetian blue	-90		
	2WH	cashmere beige	89-90		
	5VT	silk grey	89-90		
	4MT	velvet red	89-90		
	2WT	slate grey	89-90		
(26)	928 555 051 51	cover leather	/L 91	1	
	8YR	black			
	6XL	classic grey			
	9YL	cobalt blue			
	6YL	magenta			
	M05	matador red			
	D35	carrara grey			
	J25	sherwood green			
	H05	marine blue			
(26)	928 555 052 51	cover leather	/R 91	1	
	8YR	black			
	6XL	classic grey			
	9YL	cobalt blue			
	6YL	magenta			
	M05	matador red			
	D35	carrara grey			
	J25	sherwood green			
	H05	marine blue			
27	433 867 299 A	clip		4	
28	928 555 327 02	clamp		4	
29	928 555 317 02	rose		2	
30	928 555 363 02	cover	/LL	1	
(30)	927 555 363 02	cover	/RL	1	
31	928 555 461 03	mounting piece door mirror switch	/LL	1	
	70B	satin black			
(31)	927 555 462 03	mounting piece door mirror switch	/RL	1	
	70B	satin black			
32	928 555 361 02	cover memory switch	/L	1	
	70B	satin black			
(32)	928 555 362 02	cover memory switch	/R	1	
	70B	satin black			

Pos	Part Number	Name	Remarks	Qty	Model
33	928 555 087 03	package box	/L	1	
	71B	black			
(33)	928 555 088 03	package box	/R	1	
	71B	black			
-	928 555 479 03	sealing film	/L -90	1	
-	928 555 480 03	sealing film	/R -90	1	
-	928 555 479 03	sealing film	/L 91	1	
-	928 555 480 03	sealing film door	/R 91	1	
36	928 555 551 02	cable guide		2	
37	928 555 579 02	protective edging	/L	1	
(37)	928 555 580 02	protective edging	/R	1	
38	928 555 425 02	lining side window	/L	1	
	05T	black	89-		
(38)	928 555 426 02	lining side window	/R	1	
	05T	black	89-		
39	928 555 263 02	cover	/L	1	
(39)	928 555 264 02	cover cable guide	/R	1	
40	928 551 315 03	piping		2	
42	928 613 245 00	mounting piece	/L	1	M 537
	01C	satin black			
(42)	928 613 246 00	mounting piece	/R	1	M 538
	01C	satin black			
43	928 613 235 00	memory switch	/L	1	M 537
	01C	satin black			
(43)	928 613 235 00	memory switch	/R	1	M 538

Pos	Part Number	Name	Remarks	Qty	Model
	01C	satin black			
44	999 911 314 40	piping		2	
45	900 187 032 02	tapping screw		4	
46	928 564 069 40	roof frame leatherette		1	M 650
	70A	black	88-		
	3MX	burgundy	-90		
	2KA	greyish green	-88		
	5MA	mahogany	-90		
	3KA	marine blue	-91		
	6WJ	classic grey	91		
	7YU	cobalt blue	91		
	6YU	cobalt blue	91		
	8YA	magenta	91		
(46)	928 564 069 50	roof frame leather	-90	1	M 650
	KZ2	black			
	LG7	burgundy			
	QC2	greyish green			
	TV1	mahogany			
	TS1	marine blue			
	UD1	caramel			
	UD2	venetian blue			
(46)	928 564 069 50	roof frame leather	91	1	M 650
	8YR	black			
	6XL	classic grey			
	9YL	cobalt blue			
	6YL	magenta			

Pos	Part Number	Name	Remarks	Qty	Model
	M05	matador red			
	D35	carrara grey			
	J25	sherwood green			
	H05	marine blue			
47	999 591 377 02	speed nut		3	
48	928 564 399 40	sliding piece		3	
49	900 146 114 07	screw M 3,5 X 8		3	
50	928 564 259 02	gasket		1	
51	928 564 261 02	gasket		1	
52	928 555 301 60	engine cover sunroof leatherette		1	
	70A	black			
	3MX	burgundy	-90		
	2KA	greyish green	-88		
	5MA	mahogany	-90		
	3KA	marine blue	-90		
	6WG	classic grey	91		
	6YU	cobalt blue	91		
	6WW	magenta	91		
(52)	928 555 301 61	cover sunroof leather	-90	1	
	1AJ	black			
	7LD	burgundy			
	5JX	greyish green			
	2LX	mahogany			
	H05	marine blue			
	4UC	caramel			
	7KC	venetian blue			
(52)	928 555 301 61	cover sunroof leather	91	1	
	8YR	black			
	H05	marine blue			
	6XL	classic grey			
	9YL	cobalt blue			
	6YL	magenta			
	M05	matador red			
	D35	carrara grey			
	J25	sherwood green			

- -- E N D -- -

Model	Year	MG	SG	Illustration	Restrictions	Update				
928	91	8	07	807-20		179	15:53	02.09.2004	PORSCHE	PET	PORSCHE

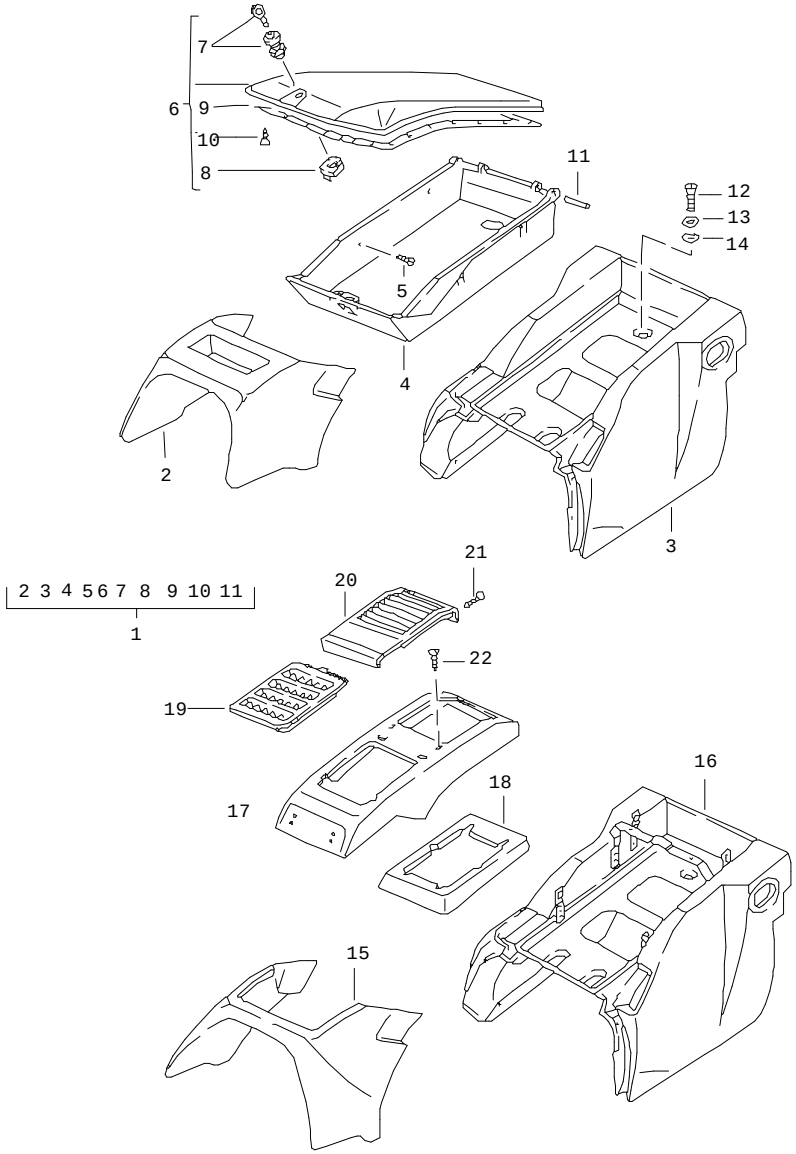

Pos	Part Number	Name	Remarks	Qty	Model
		package box rear			
1	928 522 065 60	package box rear leather	-90	1	
	KZ2	black			
	LG7	burgundy			
	QC2	greyish green	-88		
	LG5	champagne	-88		
	TV1	mahogany			
	TS1	marine blue			
	TW1	linen			
	UD3	plum red	-88		
	UD4	silver-grey	-88		
	UD5	caramel			
	UD6	venetian blue			
	2WH	cashmere beige			
	5VT	silk grey			
	4MT	velvet red			
	2WT	slate grey			
(1)	928 522 065 62	package box rear leather	91	1	
	8YR	black			
	6XL	classic grey			
	9YL	cobalt blue			
	6YL	magenta			
	8ZL	light grey			
	4YU	cashmere beige			
	M05	matador red			

Pos	Part Number	Name	Remarks	Qty	Model
	D35	carrara grey			
	J25	sherwood green			
1	928 522 065 10	package box leatherette	-90	1	
	05T	black			
	3MX	burgundy			
	4JX	greyish green	-88		
	1MX	mahogany			
	1KX	marine blue			
	4WX	linen			
	7RT	cashmere beige			
(1)	928 522 065 10	package box rear leatherette	91	1	
	05T	black			
	2WJ	classic grey			
	9ZH	cobalt blue			
	4WY	magenta			
	1ZU	light grey			
	7RT	cashmere beige			
2	928 522 063 55	package box front part leather	-90	1	
	KZ2	black			
	LG7	burgundy			
	QC2	greyish green	-88		
	LG5	champagne	-88		
	TV1	mahogany			
	TS1	marine blue			
	TW1	linen			
	UD3	plum red	-88		
	UD4	silver-grey	-88		
	UD5	caramel			
	UD6	venetian blue			
	2WH	cashmere beige			
	5VT	silk grey			
	4MT	velvet red			
	2WT	slate grey			
(2)	928 522 063 57	package box front part leather	91	1	
	8YR	black			
	6XL	classic grey			
	9YL	cobalt blue			
	6YL	magenta			
	8ZL	light grey			
	4YU	cashmere beige			
	M05	matador red			
	D35	carrara grey			
	J25	sherwood green			
(2)	928 522 063 07	package box rear front part leatherette		1	
	4JX	greyish green	-88		
	3MX	burgundy	-90		
	1MX	mahogany	-90		
	1KX	marine blue	-90		
	4WX	linen	-90		
	7RT	cashmere beige	89-		

Pos	Part Number	Name	Remarks	Qty	Model
	05T	black	87-		
	2WJ	classic grey	91		
	9ZH	cobalt blue	91		
	4WY	magenta	91		
	1ZU	light grey	91		
3	928 522 067 57	package box rear leather	-90	1	
	KZ2	black			
	LG7	burgundy			
	QC2	greyish green	-88		
	LG5	champagne	-88		
	TV1	mahogany			
	TS1	marine blue			
	TW1	linen			
	UD3	plum red	-88		
	UD4	silver-grey	-88		
	UD5	caramel			
	UD6	venetian blue			
	2WH	cashmere beige			
	5VT	silk grey			
	4MT	velvet red			
	2WT	slate grey			
(3)	928 522 067 59	package box rear leather	91	1	
	8YR	black			
	6XL	classic grey			
	9YL	cobalt blue			
	6YL	magenta			
	8ZL	light grey			
	4YU	cashmere beige			
	M05	matador red			
	D35	carrara grey			
	J25	sherwood green			
3	928 522 067 07	package box rear leatherette		1	
	4JX	greyish green	-88		
	3MX	burgundy	-90		
	4WX	linen	-90		
	1MX	mahogany	-90		
	1KX	marine blue	-90		
	05T	black	87-		
	7RT	cashmere beige	89-		
	2WJ	classic grey	91		
	9ZH	cobalt blue	91		
	4WY	magenta	91		
	1ZU	light grey	91		
4	928 522 279 02	insert package box		1	
5	900 144 017 07	tapping screw B 2,9 X 13		6	
6	928 522 061 50	cover package box leather	-90	1	
	KZ2	black			
	LG7	burgundy			
	QC2	greyish green	-88		

Pos	Part Number	Name	Remarks	Qty	Model
	LG5	champagne	-88		
	TV1	mahogany			
	TS1	marine blue			
	TW1	linen			
	UD3	plum red	-88		
	UD4	silver-grey	-88		
	UD5	caramel			
	UD6	venetian blue			
	2WH	cashmere beige			
	5VT	silk grey			
	4MT	velvet red			
	2WT	slate grey			
(6)	928 522 061 51	cover package box leather	91	1	
	8YR	black			
	6XL	classic grey			
	9YL	cobalt blue			
	6YL	magenta			
	8ZL	light grey			
	4YU	cashmere beige			
	M05	matador red			
	D35	carrara grey			
	J25	sherwood green			
6	928 522 061 02	cover package box leatherette		1	
	4WX	linen	-90		
	3MX	burgundy	-90		
	4JX	greyish green	-88		
	1MX	mahogany	-90		
	1KX	marine blue	-90		
	05T	black			
	7RT	cashmere beige	89-		
	2WJ	classic grey	91		
	9ZH	cobalt blue	91		
	4WY	magenta	91		
	1ZU	light grey	91		
7	928 522 015 02	push-button lock with 1 key		1	
8	928 522 069 02	catch		1	
9	928 522 269 02	cover strip for cover		1	
10	900 143 066 07	tapping screw 7 X 7		3	
(10)	999 141 010 07	countersunk-head screw 7 X 7		14	
11	900 309 010 00	roll pin 3 X 32		2	
12	N 014 139 11	oval-head screw M 6 X 12		4	
13	900 089 005 02	washer 6		4	
14	N 012 226 5	spring washer A 6		4	
15	928 522 063 08	front part for auxiliary air conditioner rear leatherette		1	M 570
	4WX	linen	-90		
	3MX	burgundy	-90		

Pos	Part Number	Name	Remarks	Qty	Model
	4JX	greyish green	-88		
	1MX	mahogany	-90		
	1KX	marine blue	-90		
	05T	black			
	7RT	cashmere beige	89-		
	2WJ	classic grey	91		
	9ZH	cobalt blue	91		
	4WY	magenta	91		
	1ZU	light grey	91		
(15)	928 522 063 56	front part for auxiliary air conditioner rear leather	-90	1	M 570
	KZ2	black			
	LG7	burgundy			
	QC2	greyish green	-88		
	LG5	champagne	-88		
	TV1	mahogany			
	TS1	marine blue			
	TW1	linen			
	UD3	plum red	-88		
	UD4	silver-grey	-88		
	UD5	caramel			
	UD6	venetian blue			
	2WH	cashmere beige			
	5VT	silk grey			
	4MT	velvet red			
	2WT	slate grey			

Pos	Part Number	Name	Remarks	Qty	Model
(15)	928 522 063 58	front part for auxiliary air conditioner rear leather	91	1	M 570
	8YR	black			
	6XL	classic grey			
	9YL	cobalt blue			
	6YL	magenta			
	8ZL	light grey			
	4YU	cashmere beige			
	M05	matador red			
	D35	carrara grey			
	J25	sherwood green			
16	928 522 067 08	package box rear leatherette		1	M 570
	4WX	linen	-90		
	3MX	burgundy	-90		
	4JX	greyish green	-88		
	1MX	mahogany	-90		
	1KX	marine blue	-90		
	05T	black	87-		
	7RT	cashmere beige	89-		
	2WJ	classic grey	91		
	9ZH	cobalt blue	91		
	4WY	magenta	91		
	1ZU	light grey	91		
(16)	928 522 067 58	package box rear leather	-90	1	M 570

Pos	Part Number	Name	Remarks	Qty	Model
	KZ2	black			
	LG7	burgundy			
	QC2	greyish green	-88		
	LG5	champagne	-88		
	TV1	mahogany			
	TS1	marine blue			
	TW1	linen			
	UD3	plum red	-88		
	UD4	silver-grey	-88		
	UD5	caramel			
	UD6	venetian blue			
	2WH	cashmere beige			
	5VT	silk grey			
	4MT	velvet red			
	2WT	slate grey			
(16)	928 522 067 60	package box rear leather	91	1	M 570
	8YR	black			
	6XL	classic grey			
	9YL	cobalt blue			
	6YL	magenta			
	8ZL	light grey			
	4YU	cashmere beige			
	M05	matador red			
	D35	carrara grey			
	J25	sherwood green			

Pos	Part Number	Name	Remarks	Qty	Model
17	928 570 031 00	cover auxiliary air conditioner rear leatherette		1	M 570
	4WX	linen	-90		
	1MA	burgundy	-90		
	1JL	greyish green	-88		
	5MA	mahogany	-90		
	3KA	marine blue	-90		
	5CT	black	87-		
	7RT	cashmere beige	89-		
	2WJ	classic grey	91		
	9ZH	cobalt blue	91		
	4WY	magenta	91		
	1ZU	light grey	91		
(17)	928 570 031 50	cover for auxiliary air conditioner rear leather	-90	1	M 570
	KZ2	black			
	LG7	burgundy			
	QC2	greyish green	-88		
	LG5	champagne	-88		
	TV1	mahogany			
	TS1	marine blue			
	TW1	linen			
	UD3	plum red	-88		
	UD4	silver-grey	-88		
	UD5	caramel			
	UD6	venetian blue			

Pos	Part Number	Name	Remarks	Qty	Model
	2WH	cashmere beige			
	5VT	silk grey			
	4MT	velvet red			
	2WT	slate grey			
(17)	928 570 031 51	cover for auxiliary air conditioner rear leather	91	1	M 570
	8YR	black			
	6XL	classic grey			
	9YL	cobalt blue			
	6YL	magenta			
	8ZL	light grey			
	4YU	cashmere beige			
	M05	matador red			
	D35	carrara grey			
	J25	sherwood green			
18	928 570 293 01	gasket	-90	1	M 570
(18)	928 570 293 01	gasket	91	1	M 570
19	928 570 033 00	nozzle		1	M 570
20	928 570 053 00	grille		1	M 570
	1DB	black			
21	900 145 097 07	tapping screw B 3,5 X 16		2	M 570
22	999 591 716 02	tapping nut 3,0		4	M 570
		- -- E N D -- -			

Model	Year	MG	SG	Illustration	Restrictions	Update				
928	91	8	08	808-00		179	15:53	02.09.2004	PORSCHE	PET	PORSCHE

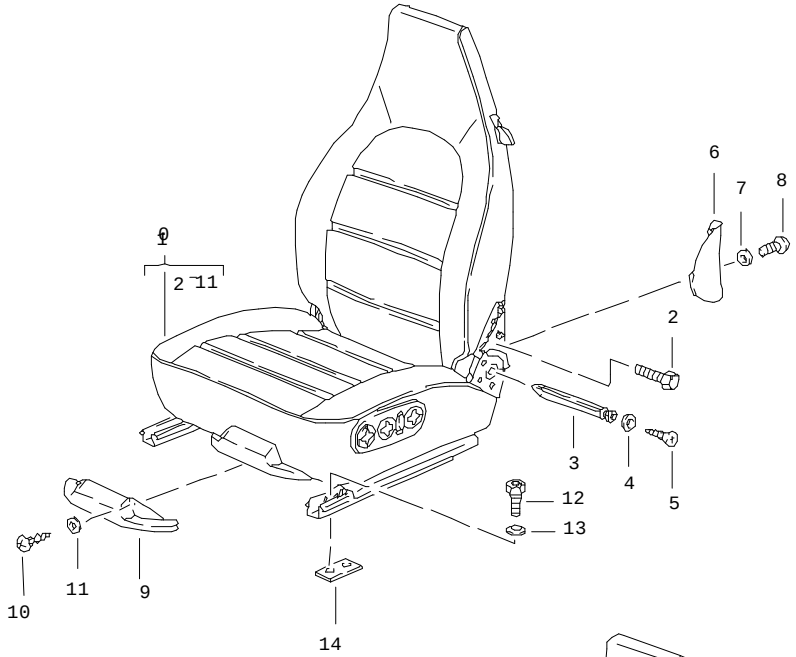

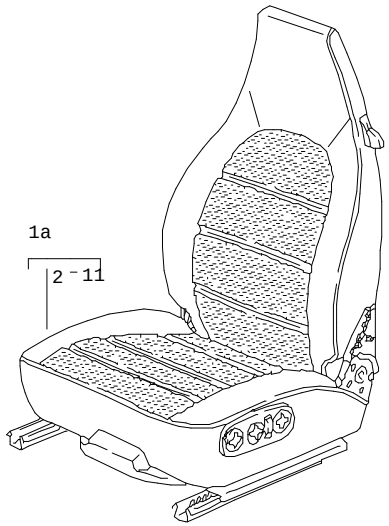

Pos	Part Number	Name	Remarks	Qty	Model
		seat complete group 8/08/00 - 8/08/50 see group 8/08/00 - 8/08/95 catalogue STZ.18 - -- E N D -- -			

Model	Year	MG	SG	Illustration	Restrictions	Update				
928	91	8	09	809-00		179	15:53	02.09.2004	PORSCHE	PET	PORSCHE

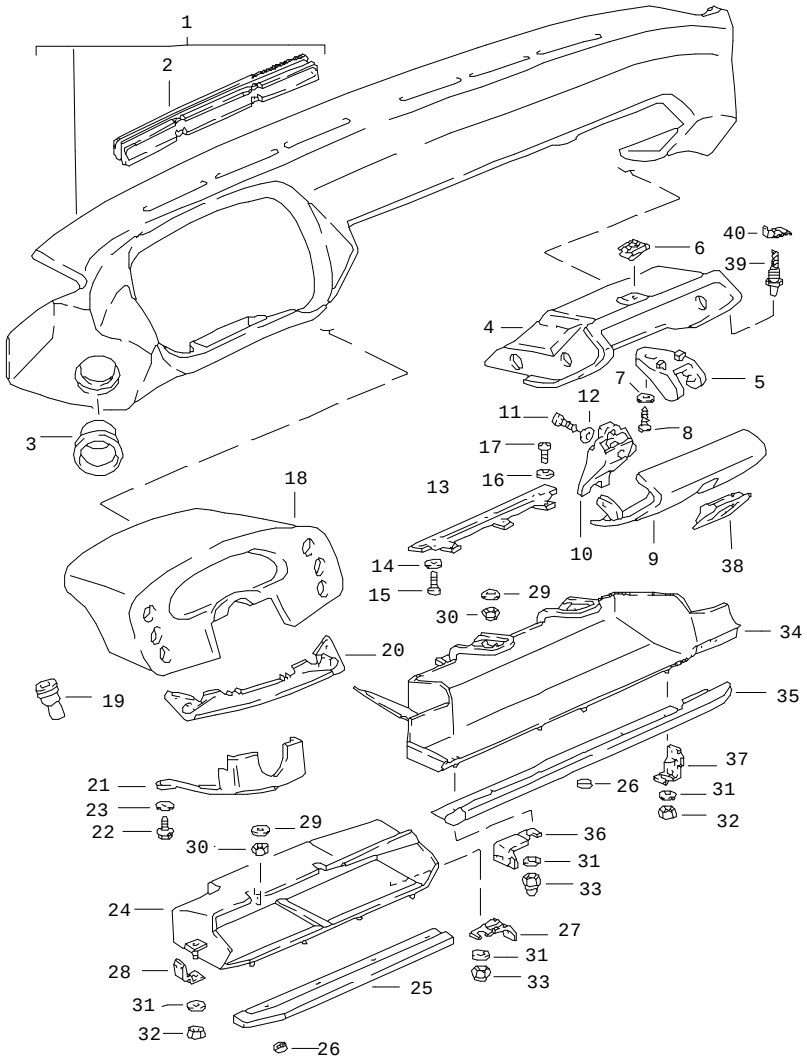

Pos	Part Number	Name	Remarks	Qty	Model
		dashboard trim	-89		
1	928 552 023 04	dashboard trim leatherette	/LL	1	
	05T	black			
	3MX	burgundy			
	4JX	greyish green			
	1MX	mahogany			
	1KX	marine blue			
1	927 552 023 04	dashboard trim leatherette	/RL	1	
	05T	black			
	3MX	burgundy			
	4JX	greyish green			
	1MX	mahogany			
	1KX	marine blue			
1	928 552 021 52	dashboard trim leather	/LL	1	
	KZ2	black			
	LG7	burgundy			
	NY3	greyish green			
	TV1	mahogany			
	TS1	marine blue			
	UD5	caramel			
	UD6	venetian blue			
	4MT	velvet red			
	2WT	slate grey			
1	927 552 021 52	dashboard trim leather	/RL	1	
	KZ2	black			

Pos	Part Number	Name	Remarks	Qty	Model
	LG7	burgundy			
	NY3	greyish green			
	TV1	mahogany			
	TS1	marine blue			
	UD5	caramel			
	UD6	venetian blue			
	4MT	velvet red			
	2WT	slate grey			
2	928 552 309 50	defroster trim	/L	1	
	70B	black			
(2)	928 552 310 50	defroster trim	/R	1	
	70B	black			
2	928 552 309 50	defroster trim for 928.552.021.52 927.552.021.52 leather	/L /LL /RL	1	
(2)	928 552 310 50	defroster trim for 928.552.021.52 927.552.021.52 leather	/R /LL /RL	1	
3	928 552 057 03	cover air duct		2	
4	928 552 051 05	glove compartment	/LL	1	
	71B	black			
(4)	927 552 051 05	glove compartment	/RL	1	
	71B	black			
5	928 552 253 03	end plate		1	
6	999 507 029 02	speed nut		2	
7	900 151 002 07	washer A 5,3		2	
8	900 143 019 07	oval-head sheetmetal screw B 4,8 X 22		2	
9	928 552 053 04	cover leatherette	/LL	1	
	CA1	black			
	JQ5	burgundy			
	NY1	greyish green	-88		
	TV4	mahogany			
	TS4	marine blue			
(9)	927 552 053 04	cover leatherette	/RL	1	
	CA1	black			
	JQ5	burgundy			
	NY1	greyish green	-88		
	TV4	mahogany			
	TS4	marine blue			
(9)	928 552 059 52	cover leather	/LL	1	
	LA1	black			
	LL6	burgundy			
	NY3	greyish green	-88		
	TT9	mahogany			
	TT8	marine blue			
	UD5	caramel			
	UD6	venetian blue			
	SM1	velvet red	89		
	SM2	slate grey	89		
(9)	927 552 059 52	cover leather	/RL	1	
	LA1	black			

Pos	Part Number	Name	Remarks	Qty	Model
	LL6	burgundy			
	NY3	greyish green	-88		
	TT9	mahogany			
	TT8	marine blue			
	UD5	caramel			
	UD6	venetian blue			
	SM1	velvet red	89		
	SM2	slate grey	89		
10	928 552 903 02	catch with lock cylinder with stipulated lock-no. state lock number		1	
11	900 143 113 07	tapping screw B 4,2 X 13		2	
12	N 011 523 11	washer A 5,3		2	
13	928 552 055 03	hinge		1	
14	900 151 002 07	washer A 5,3		3	
15	N 014 133 8	oval-head screw M 5 X 12		3	
16	N 011 523 11	washer A 5,3		3	
17	N 014 128 13	oval-head screw M 5 X 8		3	
18	928 552 031 03	instrument box		1	
	05T	black			
	3MX	burgundy			
	4JX	greyish green	-88		
	1MX	mahogany			
	1KX	marine blue			
19	928 552 049 02	spacer sleeve		4	
20	928 552 321 02	cover		1	
21	928 552 135 03	cover	-88	1	
	01C	black			
	9MM	burgundy			
	1DJ	greyish green			
	4MJ	mahogany			
	9JJ	marine blue			
(21)	928 552 135 04	cover	89	1	
	9MM	burgundy			
	4MJ	mahogany			
	01C	black			
	9JJ	marine blue			
(21)	928 552 135 05	cover	89	1	M 454
	9MM	burgundy			
	4MJ	mahogany			
	01C	satin black			
	9JJ	marine blue			
22	211 829 155	screw M 8		2	
23	900 025 007 02	washer 8,4		2	
24	928 552 117 02	shelf driver's side	/LL	1	
	71B	black			
(24)	927 552 118 02	shelf driver's side	/RL	1	AUT.
	71B	black			
(24)	927 552 118 03	shelf driver's side	/RL	1	
	71B	black			

Pos	Part Number	Name	Remarks	Qty	Model
25	928 552 127 02	protective edging shelf leatherette	/LL	1	
	05T	black			
	3MX	burgundy			
	4JX	greyish green	-88		
	1MX	mahogany			
	1KX	marine blue			
(25)	927 552 128 02	protective edging shelf leatherette	/RL	1	
	05T	black			
	3MX	burgundy			
	4JX	greyish green	-88		
	1MX	mahogany			
	1KX	marine blue			
25	928 552 127 50	protective edging shelf leather	/LL	1	
	KZ2	black			
	LG7	burgundy			
	NY3	greyish green	-88		
	TV1	mahogany			
	TS1	marine blue			
	UD5	caramel			
	UD6	venetian blue			
	4MT	velvet red	89		
	2WT	slate grey	89		
(25)	927 552 128 50	protective edging shelf leather	/RL	1	
	KZ2	black			
	LG7	burgundy			
	NY3	greyish green	-88		
	TV1	mahogany			
	TS1	marine blue			
	UD5	caramel			
	UD6	venetian blue			
	4MT	velvet red	89		
	2WT	slate grey	89		
26	999 507 251 02	mecano-speed-fix $ 5 MM		7	
(27)	927 552 381 02	bracket	/R	1	
(28)	928 552 395 02	bracket	/L	1	
29	N 011 524 7	washer A 6,4		2	
30	900 085 003 02	cap nut M 6		2	
31	900 151 027 02	washer A 5,3		2	
32	N 011 005 14	hexagon nut M 5		1	
33	N 011 141 2	cap nut M 5		1	
34	928 552 077 02	shelf	/LL	1	
	71B	black			
(34)	927 552 077 02	shelf	/RL	1	
	71B	black			
35	928 552 079 02	protective edging shelf leatherette	/LL	1	
	05T	black			

Pos	Part Number	Name	Remarks	Qty	Model
	3MX	burgundy			
	4JX	greyish green	-88		
	1MX	mahogany			
	1KX	marine blue			
(35)	927 552 079 02	protective edging shelf leatherette	/RL	1	
	05T	black			
	3MX	burgundy			
	4JX	greyish green	-88		
	1MX	mahogany			
	1KX	marine blue			
(35)	928 552 097 50	protective edging shelf leather	/LL	1	
	KZ2	black			
	LG7	burgundy			
	NY3	greyish green	-88		
	TV1	mahogany			
	TS1	marine blue			
	UD5	caramel			
	UD6	venetian blue			
	4MT	velvet red	89		
	2WT	slate grey	89		
(35)	927 552 097 50	protective edging shelf leather	/RL	1	
	KZ2	black			
	LG7	burgundy			
	NY3	greyish green	-88		
	TV1	mahogany			
	TS1	marine blue			
	UD5	caramel			
	UD6	venetian blue			
	4MT	velvet red	89		
	2WT	slate grey	89		
(36)	928 552 382 02	bracket	/L	1	
(37)	928 552 395 02	bracket	/R	1	
38	928 552 315 50	rose for cover		1	M 981
39	964 613 601 00	door contact switch		1	
40	999 507 245 02	speed nut		1	
		- -- E N D -- -			

Model	Year	MG	SG	Illustration	Restrictions	Update	15:53	02.09.2004	PORSCHE	PET	PORSCHE
928	91	8	09	809-01		179					

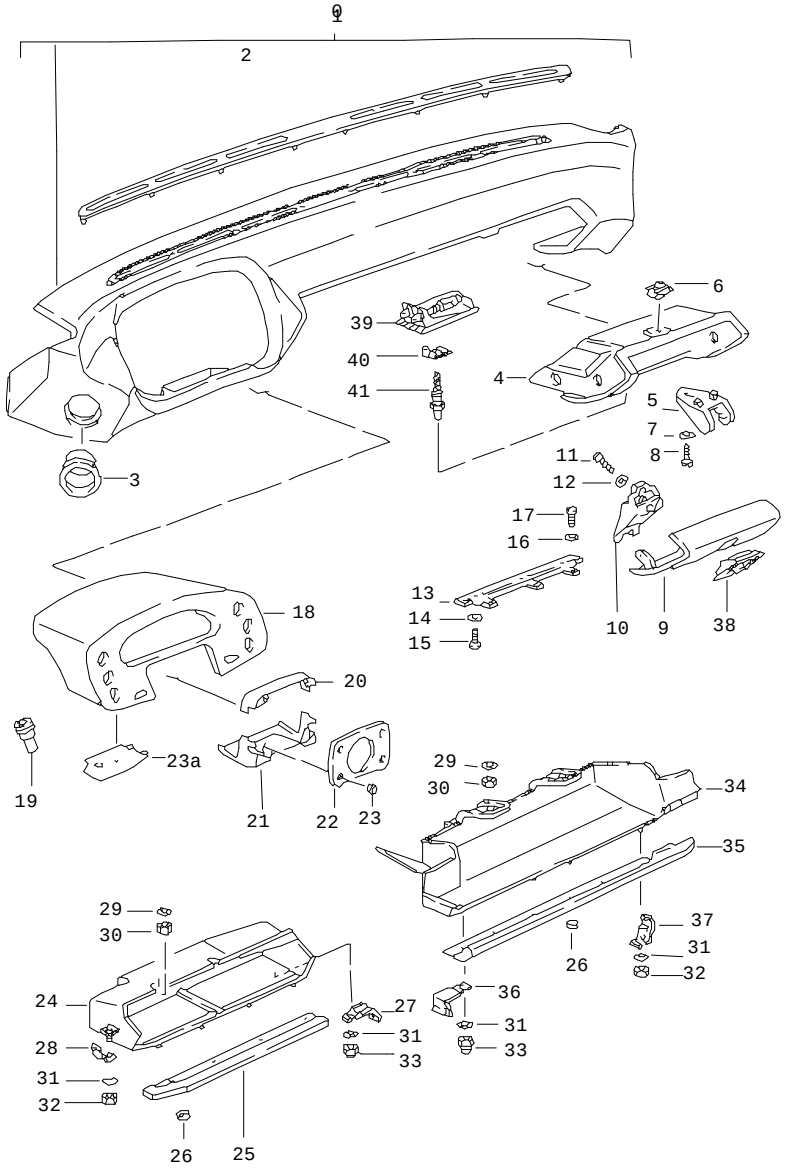

Pos	Part Number	Name	Remarks	Qty	Model
		dashboard trim	90-		
1	928 552 023 06	dashboard trim leatherette	/LL	1	
	05T	black			
	3MX	burgundy	90		
	1MX	mahogany	90		
	1KX	marine blue	90		
	9WH	classic grey	91		
	7YG	cobalt blue	91		
	9YF	magenta	91		
(1)	927 552 023 06	dashboard trim leatherette	/RL	1	
	05T	black			
	3MX	burgundy	90		
	1MX	mahogany	90		
	1KX	marine blue	90		
	9WH	classic grey	91		
	7YG	cobalt blue	91		
	9YF	magenta	91		
1	928 552 021 54	dashboard trim leather	/LL	1	
	KZ2	black	90		
	LG7	burgundy	90		
	TV1	mahogany	90		
	TS1	marine blue	90		
	UD5	caramel	90		
	UD6	venetian blue	90		
	4MT	velvet red	90		
	2WT	slate grey	90		

Pos	Part Number	Name	Remarks	Qty	Model
	8YR	black	91		
	6XL	classic grey	91		
	9YL	cobalt blue	91		
	6YL	magenta	91		
	M05	matador red	91		
	D35	carrara grey	91		
	J25	sherwood green	91		
(1)	927 552 021 54	dashboard trim leather	/RL	1	
	KZ2	black	90		
	LG7	burgundy	90		
	TV1	mahogany	90		
	TS1	marine blue	90		
	UD5	caramel	90		
	UD6	venetian blue	90		
	4MT	velvet red	90		
	2WT	slate grey	90		
	8YR	black	91		
	6XL	classic grey	91		
	9YL	cobalt blue	91		
	6YL	magenta	91		
	M05	matador red	91		
	D35	carrara grey	91		
	J25	sherwood green	91		
2	928 552 309 51	defroster trim		1	
	5XJ	black			
	7UJ	mahogany	90		
	8KM	marine blue	90		
	9MJ	burgundy	90		
	5XL	classic grey	91		
	6ZH	cobalt blue	91		
	5XW	magenta	91		
-	900 336 001 02	washer 4		8	
-	999 919 100 02	screw 4,0 X 10		8	
3	928 552 057 03	cover		1	
	70B	black			
4	928 552 051 05	glove compartment	/LL	1	
	71B	black			
(4)	927 552 051 05	glove compartment	/RL	1	
	71B	black			
5	928 552 253 03	end plate		1	
	70B	black			
6	999 507 029 02	speed nut		2	
7	900 151 002 07	washer		2	
8	900 143 019 07	oval-head sheetmetal screw B 4,8 X 22		2	
9	928 552 053 04	glove box cover leatherette	/LL	1	
	CA1	black			
	JQ5	burgundy	90		
	TV4	mahogany	90		
	TS4	marine blue	90		
	9WH	classic grey	91		
	7YG	cobalt blue	91		
	9YF	magenta	91		

Pos	Part Number	Name	Remarks	Qty	Model
(9)	927 552 053 04	glove box cover leatherette	/RL	1	
	CA1	black			
	JQ5	burgundy	90		
	TV4	mahogany	90		
	TS4	marine blue	90		
	9WH	classic grey	91		
	7YG	cobalt blue	91		
	9YF	magenta	91		
9	928 552 059 52	glove box cover leather	/LL 90	1	
	LA1	black	90		
	LL6	burgundy			
	TT9	mahogany			
	TT8	marine blue			
	UD5	caramel			
	UD6	venetian blue			
	SM1	velvet red			
	SM2	slate grey			
(9)	927 552 059 52	glove box cover leather	/RL 90	1	
	LA1	black	90		
	LL6	burgundy			
	TT9	mahogany			
	TT8	marine blue			
	UD5	caramel			
	UD6	venetian blue			
	SM1	velvet red			
	SM2	slate grey			

Pos	Part Number	Name	Remarks	Qty	Model
9	928 552 059 54	glove box cover leather	/LL 91	1	
	8YR	black			
	6XL	classic grey			
	9YL	cobalt blue			
	6YL	magenta			
	M05	matador red			
	D35	carrara grey			
	J25	sherwood green			
(9)	927 552 059 54	glove box cover leather	/RL 91	1	
	8YR	black			
	6XL	classic grey			
	9YL	cobalt blue			
	6YL	magenta			
	M05	matador red			
	D35	carrara grey			
	J25	sherwood green			
10	928 552 903 02	catch with lock cylinder with stipulated lock-no. state lock number		1	
11	900 143 113 07	tapping screw B 4,2 X 13		2	
12	N 011 523 11	washer A 5,0		2	
13	928 552 055 03	hinge		1	
14	900 151 002 07	washer A 5,3		3	
15	N 014 133 8	oval-head screw M 5 X 12		3	

Pos	Part Number	Name	Remarks	Qty	Model
16	N 011 523 11	washer A 5,3		3	
17	N 014 128 13	oval-head screw M 5 X 8		3	
18	928 552 031 04	instrument box		1	
	05T	black			
	3MX	burgundy	90		
	1MX	mahogany	90		
	1KX	marine blue			
	9WH	classic grey	91		
	7YG	cobalt blue	91		
	9YF	magenta	91		
19	928 552 049 02	spacer sleeve		4	
20	928 552 569 02	cover		1	
	9MM	burgundy	90		
	4MJ	mahogany	90		
	9JJ	marine blue			
	01C	black			
	4XC	classic grey	91		
	6ZF	cobalt blue	91		
	6WX	magenta	91		
21	928 552 579 02	cover		1	
	9MM	burgundy	90		
	4MJ	mahogany	90		
	9JJ	marine blue			
	01C	black			
	4XC	classic grey	91		
	6ZF	cobalt blue	91		
	6WX	magenta	91		
22	928 552 567 02	cover		1	
	9MM	burgundy	90		
	4MJ	mahogany	90		
	9JJ	marine blue			
	01C	black			
	4XC	classic grey	91		
	6ZF	cobalt blue	91		
	6WX	magenta	91		
23	928 552 767 00	cap		4	
	9MM	burgundy	90		
	4MJ	mahogany	90		
	9JJ	marine blue			
	01C	black			
	4XC	classic grey	91		
	6ZF	cobalt blue	91		
	6WX	magenta	91		
(23A)	928 552 521 00	cover	/L	1	
	9MM	burgundy	90		
	4MJ	mahogany	90		
	9JJ	marine blue			
	01C	satin black			
	4XC	classic grey	91		
	6ZF	cobalt blue	91		
	6WX	magenta	91		
(23A)	928 552 522 00	cover	/R	1	
	9MM	burgundy	90		

Pos	Part Number	Name	Remarks	Qty	Model
	4MJ	mahogany	90		
	9JJ	marine blue			
	01C	satin black			
	4XC	classic grey	91		
	6ZF	cobalt blue	91		
	6WX	magenta	91		
24	928 552 117 02	shelf	/LL	1	
	71B	black			
(24)	927 552 118 02	shelf	/RL	1	M 249
(24)	927 552 118 03	shelf driver's side	/RL	1	
25	928 552 127 02	protective edging shelf leatherette	/LL	1	
	05T	black			
	3MX	burgundy	90		
	1MX	mahogany	90		
	9WH	classic grey	91		
	7YG	cobalt blue	91		
	9YF	magenta	91		
(25)	927 552 128 02	protective edging shelf leatherette	/RL	1	
	05T	black			
	3MX	burgundy	90		
	1MX	mahogany	90		
	9WH	classic grey	91		
	7YG	cobalt blue	91		
	9YF	magenta	91		
(25)	928 552 127 50	protective edging shelf leather	/LL	1	
	KZ2	black	90		
	LG7	burgundy	90		
	TV1	mahogany	90		
	TS1	marine blue			
	UD5	caramel	90		
	UD6	venetian blue	90		
	4MT	velvet red	90		
	2WT	slate grey	90		
	8YR	black	91		
	6XL	classic grey	91		
	9YL	cobalt blue	91		
	6YL	magenta	91		
	M05	matador red	91		
	D35	carrara grey	91		
	J25	sherwood green	91		
(25)	927 552 128 50	protective edging shelf leather	/RL	1	
	KZ2	black	90		
	LG7	burgundy	90		
	TV1	mahogany	90		
	TS1	marine blue			
	UD5	caramel	90		
	UD6	venetian blue	90		
	4MT	velvet red	90		
	2WT	slate grey	90		

Pos	Part Number	Name	Remarks	Qty	Model
	8YR	black	91		
	6XL	classic grey	91		
	9YL	cobalt blue	91		
	6YL	magenta	91		
	M05	matador red	91		
	D35	carrara grey	91		
	J25	sherwood green	91		
26	999 507 251 02	mecano-speed-fix $ 5 MM		7	
27	927 552 381 02	bracket	/R	1	
28	928 552 395 02	bracket	/L	1	
29	N 011 524 7	washer A 6,4		2	
30	900 085 003 02	cap nut M 6		2	
31	900 151 027 02	washer A 5,3		2	
32	N 011 005 14	hexagon nut M 5		1	
33	N 011 141 2	cap nut M 5		1	
34	928 552 077 02	shelf	/LL	1	
	71B	black			
(34)	927 552 077 02	shelf	/RL	1	
	71B	black			
35	928 552 079 02	protective edging shelf leatherette	/LL	1	
	05T	black			
	3MX	burgundy	90		
	1MX	mahogany	90		
	1KX	marine blue			
	9WH	classic grey	91		
	7YG	cobalt blue	91		
	9YF	magenta	91		
(35)	927 552 079 02	protective edging shelf leatherette	/RL	1	
	05T	black			
	3MX	burgundy	90		
	1MX	mahogany	90		
	1KX	marine blue			
	9WH	classic grey	91		
	7YG	cobalt blue	91		
	9YF	magenta	91		
(35)	928 552 097 50	protective edging shelf leather	/LL	1	
	KZ2	black	90		
	LG7	burgundy	90		
	TV1	mahogany	90		
	TS1	marine blue			
	UD5	caramel	90		
	UD6	venetian blue	90		
	4MT	velvet red	90		
	2WT	slate grey	90		
	8YR	black	91		
	6XL	classic grey	91		
	9YL	cobalt blue	91		
	6YL	magenta	91		

Pos	Part Number	Name	Remarks	Qty	Model
	M05	matador red	91		
	D35	carrara grey	91		
	J25	sherwood green	91		
(35)	927 552 097 50	protective edging shelf leather	/RL	1	
	KZ2	black	90		
	LG7	burgundy	90		
	TV1	mahogany	90		
	TS1	marine blue			
	UD5	caramel	90		
	UD6	venetian blue	90		
	4MT	velvet red	90		
	2WT	slate grey	90		
	8YR	black	91		
	6XL	classic grey	91		
	9YL	cobalt blue	91		
	6YL	magenta	91		
	M05	matador red	91		
	D35	carrara grey	91		
	J25	sherwood green	91		
36	928 552 382 02	bracket	/L	1	
37	928 552 395 02	bracket	/R	1	
38	928 552 315 50	rose		1	
	70B	black			
39	928 632 111 01	light central electrical system		1	
40	964 613 601 00	door contact switch		1	
41	999 507 245 02	speed nut		1	

Pos	Part Number	Name	Remarks	Qty	Model
		- -- E N D -- -			

Model	Year	MG	SG	Illustration	Restrictions	Update				
928	91	8	09	809-02		179	15:54	02.09.2004	PORSCHE	PET PORSCHE

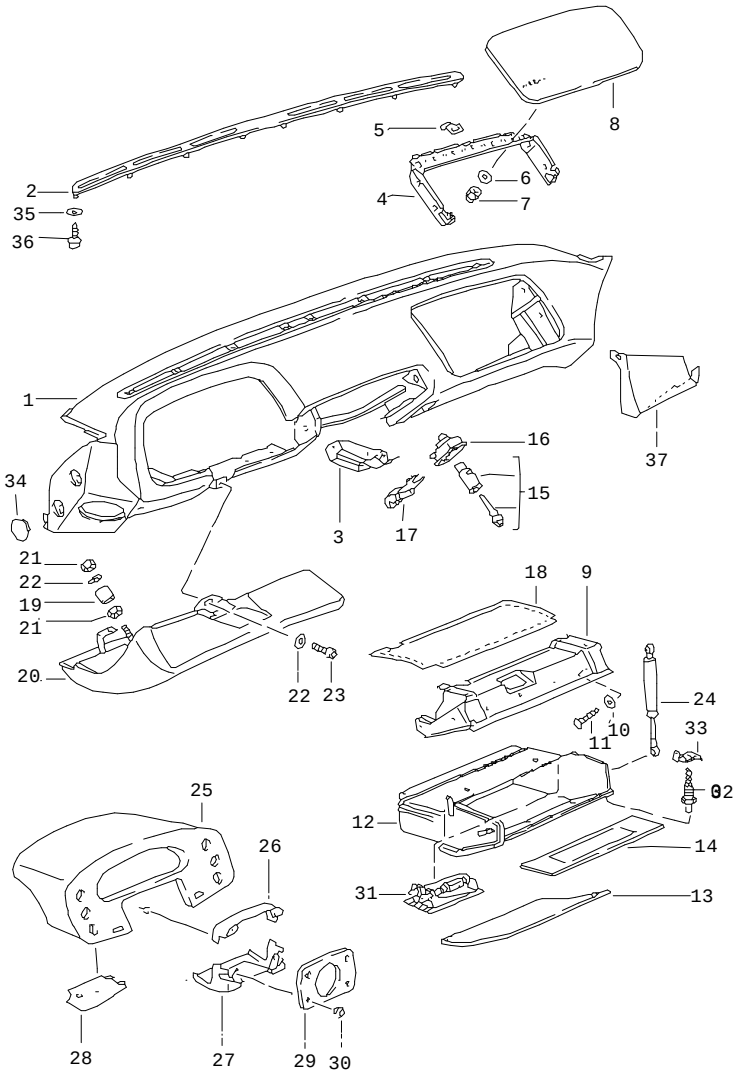

Pos	Part Number	Name	Remarks	Qty	Model
		dashboard trim airbag	91		
1	928 552 023 07	dashboard trim leatherette		1	
	05T	black			
	1KX	marine blue			
	9WH	classic grey	91		
	7YG	cobalt blue	91		
	9YF	magenta	91		
(1)	928 552 021 53	dashboard trim leather		1	
	TS1	marine blue			
	8YR	black	91		
	6XL	classic grey	91		
	9YL	cobalt blue	91		
	6YL	magenta	91		
	M05	matador red	91		
	D35	carrara grey	91		
	J25	sherwood green	91		
2	928 552 309 51	frame		1	
	5XJ	black			
	8KM	marine blue			
	5XL	classic grey	91		
	6ZH	cobalt blue	91		
	5XW	magenta	91		
3	928 552 483 00	retaining bracket		1	
4	928 552 113 00	frame		1	
5	928 552 582 02	hook		2	

Pos	Part Number	Name	Remarks	Qty	Model
6	900 151 027 02	washer A 5,3		7	
7	900 096 014 02	cap nut		4	
8	928 552 105 00	cover airbag leatherette		1	
	05T	black			
	1KX	marine blue			
	9WH	classic grey	91		
	7YG	cobalt blue	91		
	9YF	magenta	91		
(8)	928 552 015 00	cover airbag leather		1	
	TT8	marine blue			
	8YR	black	91		
	6XL	classic grey	91		
	9YL	cobalt blue	91		
	6YL	magenta	91		
	M05	matador red	91		
	D35	carrara grey	91		
	J25	sherwood green	91		
9	928 552 419 00	glove compartment		1	
	71B	black upper part			
10	N 011 665 10	washer		7	
11	900 143 019 07	oval-head sheetmetal screw B 4,8 X 22		7	
12	928 552 051 07	glove compartment		1	
	71B	black			
(13)	A 928 552 267 03	carpet		1	
	4KV	marine blue			
	8UT	cashmere beige			
	5FV	black			
	4XR	classic grey	91		
	4ZN	cobalt blue	91		
	8WZ	magenta	91		
	6YR	light grey	91		
	M33	matador red	91		
	D13	carrara grey	91		
	J23	sherwood green	91		
13	928 552 053 05	cover lower carpet		1	
	4KV	marine blue			
	8UT	cashmere beige			
	5FV	black			
	4XR	classic grey	91		
	4ZN	cobalt blue	91		
	8WZ	magenta	91		
	6YR	light grey	91		
	M33	matador red	91		
	D13	carrara grey	91		
	J23	sherwood green	91		
14	928 552 689 00	rubber pad		1	
15	928 537 901 00	lock cylinder for glove compartment lock state lock number		1	
16	928 538 051 00	finger plate		1	
	01C	satin black			

Pos	Part Number	Name	Remarks	Qty	Model
17	928 538 061 01	catch		1	
(17)	928 538 061 01	catch		1	M 981
(18)	A 928 552 099 01	cover glove compartment	91	1	
(18)	928 552 099 01	cover		1	
	70B	black			
19	999 924 061 02	bush		1	
(19)	999 924 082 02	bush		1	M 981
20	928 552 131 00	knee protection trim leatherette		1	
	1KX	marine blue			
	05T	black			
	7YG	cobalt blue	91		
	9YF	magenta	91		
	9WH	classic grey	91		
(20)	928 552 131 50	knee protection trim leather		1	M 981
	TT8	marine blue			
	8YR	black	91		
	6XL	classic grey	91		
	9YL	cobalt blue	91		
	6YL	magenta	91		
	M05	matador red	91		
	D35	carrara grey	91		
	J25	sherwood green	91		
21	900 076 010 02	hexagon nut		1	
22	900 031 011 02	washer		1	
23	N 014 701 7	pan-head screw		1	
24	928 552 752 00	damper		1	
25	928 552 031 04	instrument box		1	
	1KX	marine blue			
	05T	black			
	9WH	classic grey	91		
	7YG	cobalt blue	91		
	9YF	magenta	91		
26	928 552 569 02	cover		1	
	8JJ	marine blue			
	01C	black			
	4XC	classic grey	91		
	6ZF	cobalt blue	91		
	6WX	magenta	91		
27	928 552 579 02	cover		1	
	9JJ	marine blue			
	01C	black			
	4XC	classic grey	91		
	6ZF	cobalt blue	91		
	6WX	magenta	91		
28	928 552 521 00	cover instrument box lower		1	
	9JJ	marine blue			
	01C	satin black			
	4XC	classic grey	91		
	6ZF	cobalt blue	91		
	6WX	magenta	91		
(28)	928 552 522 00	cover instrument box lower		1	

Pos	Part Number	Name	Remarks	Qty	Model
	9JJ	marine blue			
	01C	satin black			
	4XC	classic grey	91		
	6ZF	cobalt blue	91		
	6WX	magenta	91		
29	928 552 567 03	cover steering column switch		1	
	9JJ	marine blue			
	01C	black			
	4XC	classic grey	91		
	6ZF	cobalt blue	91		
	6WX	magenta	91		
30	928 552 767 00	cap		4	
	9JJ	marine blue			
	01C	black			
	4XC	classic grey	91		
	6ZF	cobalt blue	91		
	6WX	magenta	91		
31	928 632 111 01	light central electrical system		1	
32	964 613 601 00	door contact switch		1	
33	999 507 245 02	speed nut		1	
34	999 703 381 40	plug		1	
	01C	satin black 25-27 X 33 X 5			
35	900 336 001 02	washer 4		8	
36	999 919 100 02	screw 4,0 X 10		8	
37	928 552 360 00	terminal piece carpet	/R	1	
	5FV	black			
	4KV	marine blue			
	8UT	cashmere beige			
	4XR	classic grey	91		
	4ZN	cobalt blue	91		
	8WZ	magenta	91		
	6YR	light grey	91		
	M33	matador red	91		
	D13	carrara grey	91		
	J23	sherwood green	91		
		- -- E N D -- -			

Model	Year	MG	SG	Illustration	Restrictions	Update				
928	91	8	09	809-03		179	15:54	02.09.2004	PORSCHE	PET	PORSCHE

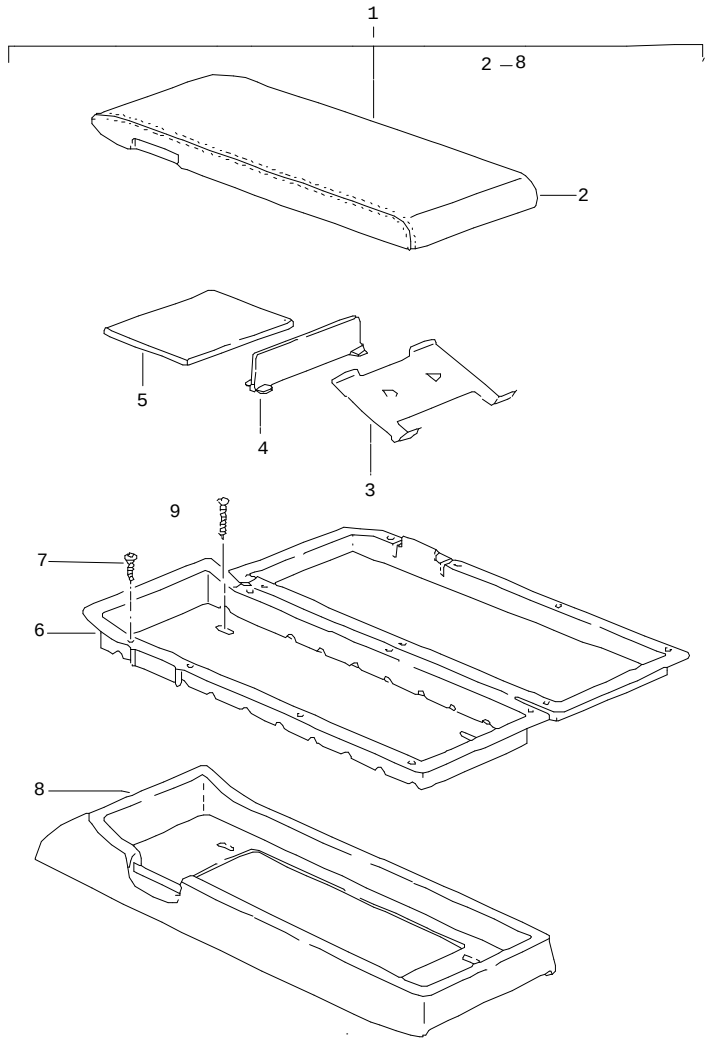

Pos	Part Number	Name	Remarks	Qty	Model
		cassette box			
1	928 555 701 53	cassette box leather	/LL -90	1	
	KZ2	black			
	LG7	burgundy			
	QC2	greyish green	-88		
	TV1	mahogany			
	TS1	marine blue			
	UD5	caramel			
	UD6	venetian blue			
	4MT	velvet red	89-90		
	2WT	slate grey	89-90		
(1)	927 555 701 53	cassette box leather	/RL -90	1	
	KZ2	black			
	LG7	burgundy			
	QC2	greyish green	-88		
	TV1	mahogany			
	TS1	marine blue			
	UD5	caramel			
	UD6	venetian blue			
	4MT	velvet red	89-90		
	2WT	slate grey	89-90		
(1)	928 555 701 54	cassette box leather	/LL 91	1	
	8YR	black			
	6XL	classic grey			
	9YL	cobalt blue			
	6YL	magenta			

Pos	Part Number	Name	Remarks	Qty	Model
	M05	matador red			
	D35	carrara grey			
	J25	sherwood green			
(1)	927 555 701 54	cassette box leather	/RL 91	1	
	8YR	black			
	6XL	classic grey			
	9YL	cobalt blue			
	6YL	magenta			
	M05	matador red			
	D35	carrara grey			
	J25	sherwood green			
(1)	928 555 701 55	cassette box leather	/LL 91	1	
	8YR	black			
	6XL	classic grey			
	9YL	cobalt blue			
	6YL	magenta			
	M05	matador red			
	D35	carrara grey			
	J25	sherwood green			
(1)	927 555 701 55	cassette box leather	/RL 91	1	
	8YR	black			
	6XL	classic grey			
	9YL	cobalt blue			
	6YL	magenta			
	M05	matador red			
	D35	carrara grey			
	J25	sherwood green			
2	928 555 705 51	cover leather	/LL	1	
	KZ2	black	-90		
	8YR	black	91-		
	LG7	burgundy	-90		
	QC2	greyish green	-88		
	TV1	mahogany	-90		
	TS1	marine blue	-90		
	UD5	caramel	-90		
	UD6	venetian blue	-90		
	4MT	velvet red	89-90		
	2WT	slate grey	89-90		
	6XL	classic grey	91		
	9YL	cobalt blue	91		
	6YL	magenta	91		
	M05	matador red	91		
	D35	carrara grey	91		
	J25	sherwood green	91		
(2)	927 555 705 51	cover leather	/RL	1	
	KZ2	black	-90		
	8YR	black	91-		
	LG7	burgundy	-90		
	QC2	greyish green	-88		
	TV1	mahogany	-90		
	TS1	marine blue	-90		
	UD5	caramel	-90		

Pos	Part Number	Name	Remarks	Qty	Model
	UD6	venetian blue	-90		
	4MT	velvet red	89-90		
	2WT	slate grey	89-90		
	6XL	classic grey	91		
	9YL	cobalt blue	91		
	6YL	magenta	91		
	M05	matador red	91		
	D35	carrara grey	91		
	J25	sherwood green	91		
3	928 555 731 02	cassette support		8	
	01C	satin black			
4	928 555 741 02	partition panel		1	
5	928 555 735 03	cover 82 X 108		1	
6	928 555 729 03	insert	/LL	1	
	01C	satin black			
(6)	927 555 729 03	insert	/RL	1	
	01C	satin black			
7	900 143 065 07	tapping screw B 2,9 X 9,5		14	
8	928 555 703 51	lower part leather	/LL	1	
	KZ2	black	-90		
	8YR	black	91-		
	LG7	burgundy	-90		
	QC2	greyish green	-88		
	TV1	mahogany	-90		
	TS1	marine blue	-90		
	UD5	caramel	-90		

Pos	Part Number	Name	Remarks	Qty	Model
	UD6	venetian blue	-90		
	4MT	velvet red	89-90		
	2WT	slate grey	89-90		
	6XL	classic grey	91		
	9YL	cobalt blue	91		
	6YL	magenta	91		
	M05	matador red	91		
	D35	carrara grey	91		
	J25	sherwood green	91		
(8)	927 555 703 51	lower part leather	/RL	1	
	KZ2	black	-90		
	8YR	black	91-		
	LG7	burgundy	-90		
	QC2	greyish green	-88		
	TV1	mahogany	-90		
	TS1	marine blue	-90		
	UD5	caramel	-90		
	UD6	venetian blue	-90		
	4MT	velvet red	89-90		
	2WT	slate grey	89-90		
	6XL	classic grey	91		
	9YL	cobalt blue	91		
	6YL	magenta	91		
	M05	matador red	91		
	D35	carrara grey	91		
	J25	sherwood green	91		

Pos	Part Number	Name	Remarks	Qty	Model	Pos	Part Number	Name	Remarks	Qty	Model
9	999 450 001 07	round head screw B 4,2 X 25		4							
		- -- E N D -- -									

Model	Year	MG	SG	Illustration	Restrictions	Update				
928	91	8	09	809-05		179	15:54	02.09.2004	PORSCHE	PET	PORSCHE

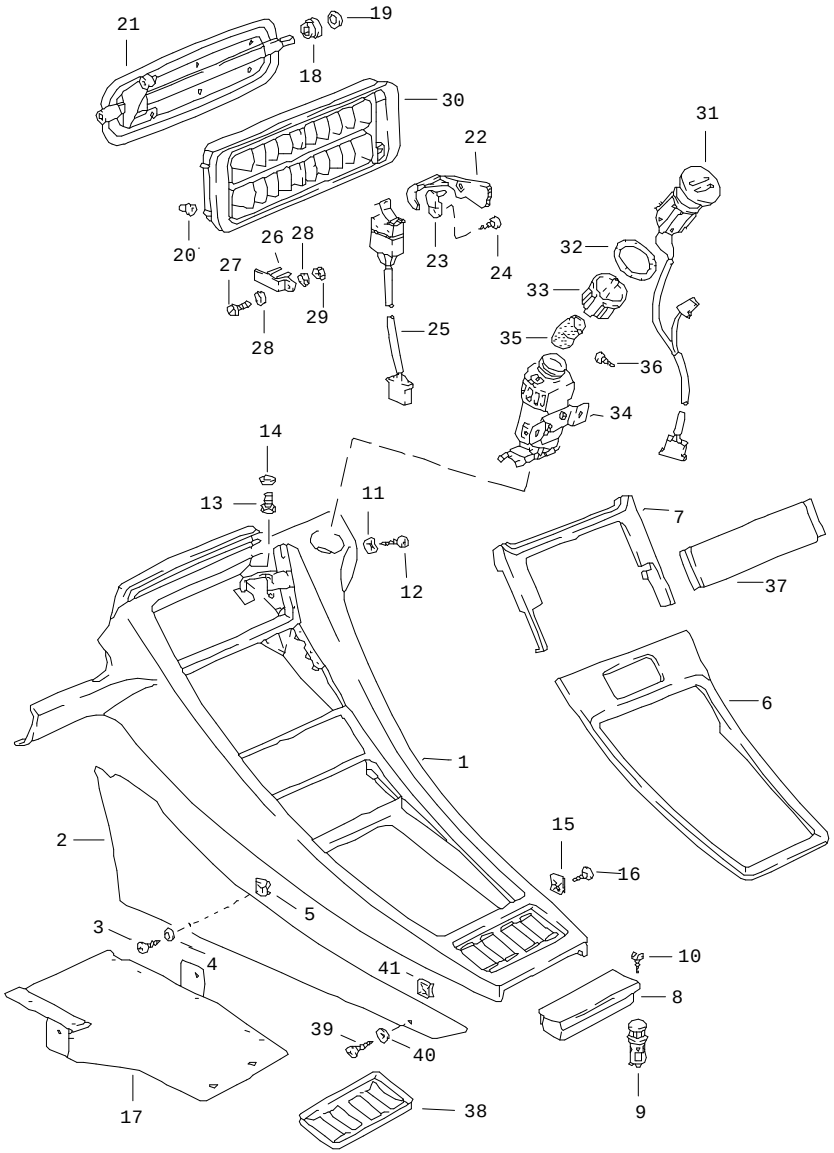

Pos	Part Number	Name	Remarks	Qty	Model
		centre console			
1	928 552 043 08	centre console leatherette	/LL	1	
	TS4	marine blue	-90		
	JQ5	burgundy	-90		
	NY1	greyish green	-88		
	TV4	mahogany	-90		
	TS4	marine blue	-90		
	CA4	black			
	9WH	classic grey	91		
	7YG	cobalt blue	91		
	9YF	magenta	91		
(1)	928 552 043 10	centre console leatherette	91	1	M 562
	CA4	black			
	9WH	classic grey	91		
	7YG	cobalt blue	91		
	9YF	magenta	91		
(1)	927 552 043 08	centre console leatherette	/RL	1	
	TS4	marine blue	-90		
	JQ5	burgundy	-90		
	NY1	greyish green	-88		
	TV4	mahogany	-90		
	TS4	marine blue	-90		
	CA4	black			
	9WH	classic grey	91		
	7YG	cobalt blue	91		
	9YF	magenta	91		

Pos	Part Number	Name	Remarks	Qty	Model
(1)	928 552 045 55	centre console leather	/LL -90	1	
	LA1	black	-90		
	LL6	burgundy	-90		
	NY3	greyish green	-88		
	TT9	mahogany	-90		
	TT8	marine blue	-90		
	UD5	caramel	-90		
	UD6	venetian blue	-90		
	SM1	velvet red	89-90		
	SM2	slate grey	89-90		
(1)	927 552 045 55	centre console leather	/RL -90	1	
	LA1	black	-90		
	LL6	burgundy	-90		
	NY3	greyish green	-88		
	TT9	mahogany	-90		
	TT8	marine blue	-90		
	UD5	caramel	-90		
	UD6	venetian blue	-90		
	SM1	velvet red	89-90		
	SM2	slate grey	89-90		
(1)	928 552 045 55	centre console leather	/LL 91	1	
	8YR	black			
	6XL	classic grey			
	9YL	cobalt blue			
	6YL	magenta			
	M05	matador red			
	D35	carrara grey			
	J25	sherwood green			
(1)	928 552 045 56	centre console leather	91	1	M 562
	8YR	black			
	6XL	classic grey			
	9YL	cobalt blue			
	6YL	magenta			
	M05	matador red			
	D35	carrara grey			
	J25	sherwood green			
(1)	927 552 045 55	centre console leather	/RL 91	1	
	8YR	black			
	6XL	classic grey			
	9YL	cobalt blue			
	6YL	magenta			
	M05	matador red			
	D35	carrara grey			
	J25	sherwood green			
2	927 552 073 02	side section carpet centre console	/L	1	M 564
	70E	black	-88		
	5FV	black	89-		
	80E	burgundy	-88		
	8MD	burgundy	89-90		
	8JK	greyish green	-88		
	1VD	champagne	-88		

Pos	Part Number	Name	Remarks	Qty	Model
	5MF	mahogany	-90		
	3KF	marine blue	-88		
	4KV	marine blue	89-90		
	2XF	linen	-90		
	4MM	plum red	-88		
	7VM	silver-grey	-88		
	5UM	caramel	-90		
	3KM	venetian blue	-90		
	8UT	cashmere beige	90-		
	7VT	silk grey	89-90		
	9MT	velvet red	89-90		
	3WT	slate grey	89-90		
	4XR	classic grey	91		
	4ZN	cobalt blue	91		
	8WZ	magenta	91		
	6YR	light grey	91		
	M33	matador red	91		
	D13	carrara grey	91		
	J23	sherwood green	91		
(2)	927 552 073 03	side section carpet centre console	/L 91	1	M 562
	5FV	black	89-		
	8UT	cashmere beige	90-		
	4XR	classic grey	91		
	4ZN	cobalt blue	91		
	8WZ	magenta	91		
	6YR	light grey	91		

Pos	Part Number	Name	Remarks	Qty	Model
	M33	matador red	91		
	D13	carrara grey	91		
	J23	sherwood green	91		
(2)	928 552 074 02	side section carpet centre console	/R	1	M 564
	70E	black	-88		
	5FV	black	89-		
	80E	burgundy	-88		
	8MD	burgundy	89-90		
	8JK	greyish green	-88		
	1VD	champagne	-88		
	5MF	mahogany	-90		
	3KF	marine blue	-88		
	4KV	marine blue	89-90		
	2XF	linen	-90		
	4MM	plum red	-88		
	7VM	silver-grey	-88		
	5UM	caramel	-90		
	3KM	venetian blue	-90		
	8UT	cashmere beige	90-		
	7VT	silk grey	89-90		
	9MT	velvet red	89-90		
	3WT	slate grey	89-90		
	4XR	classic grey	91		
	4ZN	cobalt blue	91		
	8WZ	magenta	91		
	6YR	light grey	91		

Pos	Part Number	Name	Remarks	Qty	Model
	M33	matador red	91		
	D13	carrara grey	91		
	J23	sherwood green	91		
(2)	928 552 074 03	side section carpet centre console	/R 91	1	M 562
	5FV	black	89-		
	8UT	cashmere beige	90-		
	4XR	classic grey	91		
	4ZN	cobalt blue	91		
	8WZ	magenta	91		
	6YR	light grey	91		
	M33	matador red	91		
	D13	carrara grey	91		
	J23	sherwood green	91		
3	N 014 098 6	tapping screw 4,8 X 16		4	
4	999 591 437 07	washer 4,8		4	
5	999 507 002 02	speed nut		2	
6	928 552 047 07	cover lower for interior equipment leather		1	
(6)	928 552 047 09	cover lower for interior equipment leather		1	M 570
6	928 552 047 08	cover lower for interior equipment leatherette		1	
(6)	928 552 047 10	cover lower for interior equipment leatherette		1	M 570
7	928 552 362 00	cover upper for interior equipment leatherette		1	
7	928 552 362 50	cover upper for interior equipment leather		1	
8	A 928 552 060 02	ashtray	-90	1	
8	928 552 060 02	ashtray		1	
	70B	black			
9	928 652 103 00	cigarette lighter		1	
10	900 144 017 07	tapping screw		2	
11	999 507 030 02	speed nut 4,8		3	
12	900 187 018 02	hexagon-head tapping screw 4,8 X 16		1	
13	900 075 145 02	hexagon-head bolt M 5 X 16		2	
14	900 025 003 02	washer A 5,3		2	
15	999 507 002 02	speed nut		2	
16	900 143 046 07	tapping screw B 4,8 X 16		6	
17	928 552 389 02	plate for cruise control regulator and receiving part		1	
18	928 574 291 02	bearing sleeve		2	
19	999 591 459 02	mecano-speed-fix		2	

Pos	Part Number	Name	Remarks	Qty	Model
20	999 702 111 50	grommet		4	
(21)	928 574 125 02	flap		1	
--	928 574 434 02	shaft		1	
22	928 574 649 02	actuating lever		1	
	70B	satin black			
23	928 574 645 02	fastening part		1	
24	900 143 031 02	oval-head sheetmetal screw B 4,2 X 9,5		1	
25	928 613 049 01	micro-changeover switch		1	
26	928 573 747 04	support		1	
27	900 119 024 02	pan-head screw M 4 X 12		1	
28	N 042 122 2	shake-proof washer		2	
29	N 011 004 6	hexagon nut M 4		1	
30	928 574 040 03	frame for interior equipment leatherette		1	
30	928 574 040 50	frame for interior equipment leather		1	
31	928 624 041 00	interior sensor		1	
32	928 573 344 02	sealing ring		1	
33	928 573 527 02	connecting piece		1	
34	928 624 113 01	interior sensor blower		1	
35	928 624 312 01	hose	/LL	1	
(35)	928 624 312 00	hose	/RL	1	
36	N 013 968 7	tapping screw B 4,8 X 13		2	
37	928 552 270 05	cover		1	
	70B	black radio			
38	928 552 313 50	frame		1	
	70B	black for tip switch for interior equipment leather			
39	N 014 098 6	tapping screw 4,8 X 16		2	
40	999 591 437 07	washer 4,8		2	
41	999 507 002 02	speed nut		2	
		- -- E N D -- -			

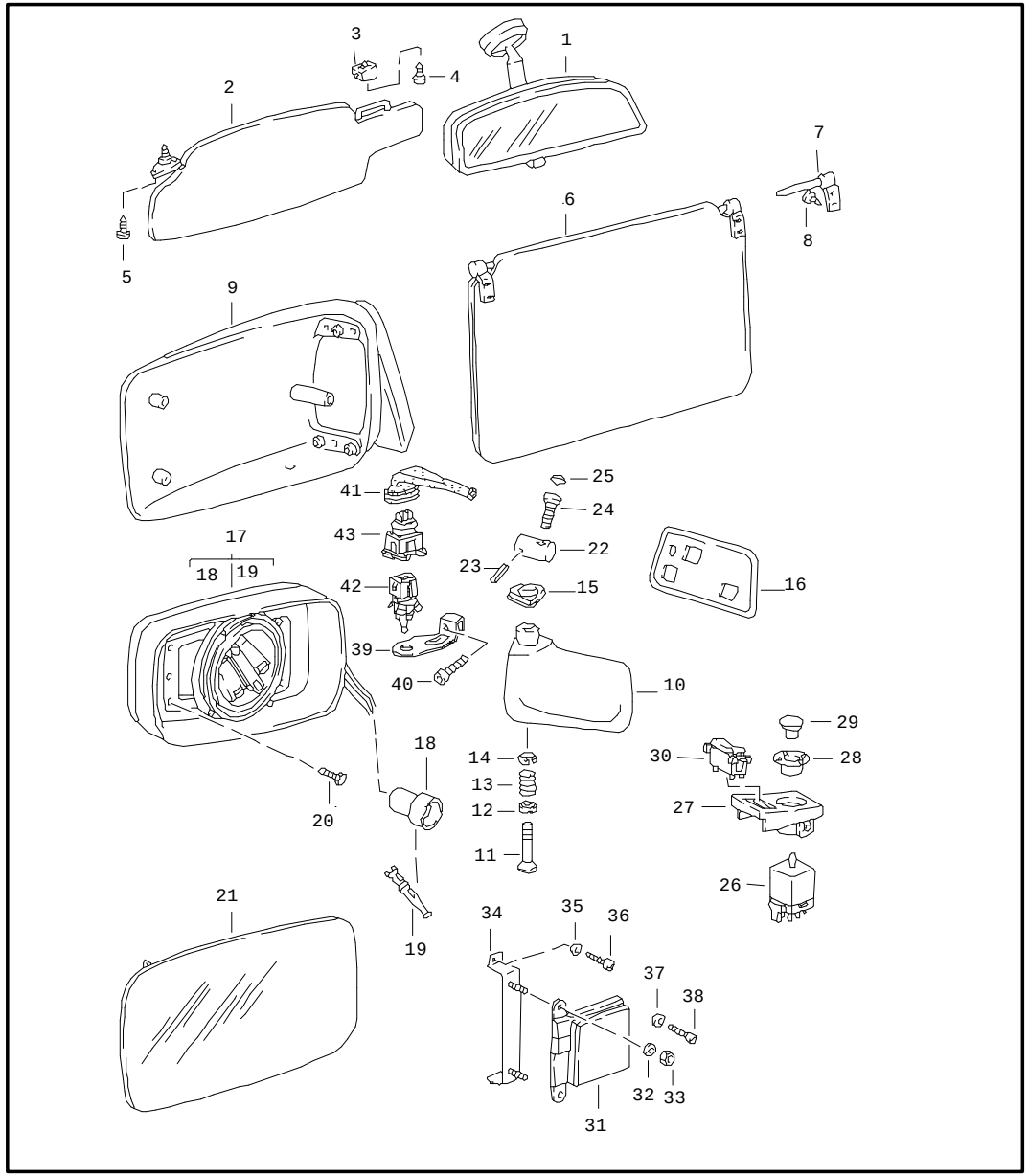

Pos	Part Number	Name	Remarks	Qty	Model
		sun visor interior mirror door mirror			
1	477 857 511 A	interior mirror		1	
	70B	black			
(2)	928 731 031 11	sun visor with mirror leatherette	/L	1	
	CA9	black			
	RS8	burgundy	-90		
	RS9	greyish green	-88		
	TV3	mahogany	-90		
	TS3	marine blue	-90		
	6WJ	classic grey	91		
	7YU	cobalt blue	91		
	8YA	magenta	91		
(2)	928 731 032 11	sun visor with mirror leatherette	/R	1	
	CA9	black			
	RS8	burgundy	-90		
	RS9	greyish green	-88		
	TV3	mahogany	-90		
	TS3	marine blue	-90		
	6WJ	classic grey	91		
	7YU	cobalt blue	91		
	8YA	magenta	91		
(2)	928 731 031 12	sun visor with mirror leatherette	/L	1	(S)(AUS)
	CA9	black			

Pos	Part Number	Name	Remarks	Qty	Model
	RS8	burgundy	-90		
	RS9	greyish green	-88		
	TV3	mahogany	-90		
	TS3	marine blue	-90		
	6WJ	classic grey	91		
	7YU	cobalt blue	91		
	8YA	magenta	91		
(2)	928 731 032 12	sun visor with mirror leatherette	/R	1	(S)(AUS)
	CA9	black			
	RS8	burgundy	-90		
	RS9	greyish green	-88		
	TV3	mahogany	-90		
	TS3	marine blue	-90		
	6WJ	classic grey	91		
	7YU	cobalt blue	91		
	8YA	magenta	91		
(2)	928 731 053 50	sun visor with mirror leather	/L	1	
	LA1	black	-90		
	TZ1	burgundy	-90		
	UA1	greyish green	-88		
	TY1	mahogany	-90		
	TW9	marine blue	-90		
	UD1	caramel	-90		
	UD2	venetian blue	-90		
	SM1	velvet red	-90		
	SM2	slate grey	-90		
(2)	928 731 054 50	sun visor with mirror leather	/R	1	
	LA1	black	-90		
	TZ1	burgundy	-90		
	UA1	greyish green	-88		
	TY1	mahogany	-90		
	TW9	marine blue	-90		
	UD1	caramel	-90		
	UD2	venetian blue	-90		
	SM1	velvet red	-90		
	SM2	slate grey	-90		
(2)	928 731 053 50	sun visor with mirror leather	/L	1	
	8YR	black	91		
	6XL	classic grey	91		
	9YL	cobalt blue	91		
	6YL	magenta	91		
	M05	matador red	91		
	D35	carrara grey	91		
	J25	sherwood green	91		
(2)	928 731 054 50	sun visor with mirror leather	/R	1	
	8YR	black	91		
	6XL	classic grey	91		
	9YL	cobalt blue	91		
	6YL	magenta	91		

Pos	Part Number	Name	Remarks	Qty	Model
	M05	matador red	91		
	D35	carrara grey	91		
	J25	sherwood green	91		
(2)	928 731 053 51	sun visor with mirror leather	/L	1	(S)(AUS)
	LA1	black	-90		
	TZ1	burgundy	-90		
	UA1	greyish green	-88		
	TY1	mahogany	-90		
	TW9	marine blue	-90		
	UD1	caramel	-90		
	UD2	venetian blue	-90		
(2)	928 731 054 51	sun visor with mirror leather	/R	1	(S)(AUS)
	LA1	black	-90		
	TZ1	burgundy	-90		
	UA1	greyish green	-88		
	TY1	mahogany	-90		
	TW9	marine blue	-90		
	UD1	caramel	-90		
	UD2	venetian blue	-90		
(2)	928 731 053 51	sun visor with mirror leather	/L	1	(S)(AUS)
	8YR	black	91		
	6XL	classic grey	91		
	9YL	cobalt blue	91		
	6YL	magenta	91		

Pos	Part Number	Name	Remarks	Qty	Model
	M05	matador red	91		
	D35	carrara grey	91		
	J25	sherwood green	91		
(2)	928 731 054 51	sun visor with mirror leather	/R	1	(S)(AUS)
	8YR	black	91		
	6XL	classic grey	91		
	9YL	cobalt blue	91		
	6YL	magenta	91		
	M05	matador red	91		
	D35	carrara grey	91		
	J25	sherwood green	91		
3	911 731 331 00	support		2	
3	911 731 331 00	support		2	M 650
4	900 143 034 07	oval-head sheetmetal screw 3,9 X 19		2	
5	900 145 016 07	tapping screw 4,2 X 19		6	
6	928 731 035 04	sun visor leatherette rear	/H -91	2	
	70A	black			
	3MX	burgundy	-90		
	2KA	greyish green	-88		
	5MA	mahogany	-90		
	3KA	marine blue	-90		
	6WJ	classic grey	91		
	7YU	cobalt blue	91		
	8YA	magenta	91		

Pos	Part Number	Name	Remarks	Qty	Model
(6)	928 731 035 52	sun visor leather rear	/H -91	2	
	LA1	black	-90		
	LL6	burgundy	-90		
	NY3	greyish green	-88		
	TT9	mahogany	-90		
	TT8	marine blue	-90		
	UD1	caramel	-90		
	UD2	venetian blue	-90		
	SM1	velvet red	-90		
	SM2	slate grey	-90		
(6)	928 731 035 52	sun visor leather rear	/H -91	2	
	8YR	black	91		
	6XL	classic grey	91		
	9YL	cobalt blue	91		
	6YL	magenta	91		
	M05	matador red	91		
	D35	carrara grey	91		
	J25	sherwood green	91		
7	928 731 043 02	bearing bracket	/L	1	
7	928 731 044 02	bearing bracket	/R	1	
8	900 145 016 07	tapping screw 4,2 X 19	90-	4	
9	911 731 043 03	mirror housing	/L	1	
9	911 731 044 03	mirror housing	/R	1	
10	928 731 141 06	mirror base	/LL/L	1	
(10)	928 731 143 08	mirror base	/LL/R	1	

Pos	Part Number	Name	Remarks	Qty	Model
(10)	927 731 141 06	mirror base	/RL/R	1	
(10)	927 731 143 08	mirror base	/RL/L	1	
11	911 731 257 02	guide tube		2	
12	911 731 345 02	adjusting washer lower		2 2	
13	911 731 029 01	compression spring		2	
14	911 731 347 00	adjusting washer upper		2	
15	944 731 143 00	seal		2	
16	928 731 247 03	desk pad	/LL/L	1	
(16)	928 731 249 04	desk pad	/LL/R	1	
(16)	927 731 247 03	desk pad	/RL/R	1	
(16)	927 731 249 04	desk pad	/RL/L	1	
17	944 731 027 01	electric installation set		2	
(17)	928 624 067 00	frame with transmission		2	M 537/538
18	803 971 980	connector 7-pole		2	
19	N 017 564 1	round connector 1,6 - 1		X	
20	999 143 003 02	hexagon-head bolt M 5 X 10		6	
21	944 731 035 02	mirror glass plan		1	
(21)	944 731 035 04	mirror glass plan		1	(S)
(21)	944 731 035 03	mirror glass convex		1	
(21)	944 731 035 05	mirror glass convex		1	(S)
22	928 531 235 03	threaded piece		2	
23	N 013 295 1	tensioning sleeve		1	

Pos	Part Number	Name	Remarks	Qty	Model
24	999 218 019 02	screw M 5 X 45	-90	2	
(24)	999 218 073 02	pan-head screw M 5 X 45	91	2	
25	999 703 137 40	cap		2	
26	928 613 241 00	switch		1	
27	928 555 461 03	mounting piece	/LL	1	
	70B	satin black			
(27)	927 555 462 03	mounting piece	/RL	1	
	70B	satin black			
28	928 555 463 02	threaded bush		1	
29	928 613 082 00	knob		1	
30	928 613 240 00	switch		1	
	01C	satin black			
31	928 618 136 00	control unit	-89	1	M 537/538
31	928 618 136 02	control unit	90-	1	M 537/538
32	N 011 525 13	washer A 8,4	/LL	2	M 537
33	900 076 025 02	hexagon nut M 8	/LL	2	M 537
34	928 618 431 00	retaining bracket	/LL	1	M 537
35	N 011 524 7	washer A 6,4	/LL	2	M 537
36	N 014 138 7	oval-head screw M 6 X 10	/LL	2	M 537
37	N 011 666 7	washer B 6,4	/RL	2	M 538
38	N 014 142 3	oval-head screw M 6 X 20	/RL	2	M 538
39	928 641 342 00	support	/LL	1	
(39)	927 641 342 00	support	/RL	1	
40	N 014 760 3	pan-head screw M 5 X 12		1	
41	911 612 817 00	protection cap		1	
42	928 641 142 00	temperature sensor		1	
43	443 906 232	connector housing		1	

- -- E N D -- -

Model	Year	MG	SG	Illustration	Restrictions	Update				
928	91	8	09	809-15		179	15:54	02.09.2004	PORSCHE	PET	PORSCHE

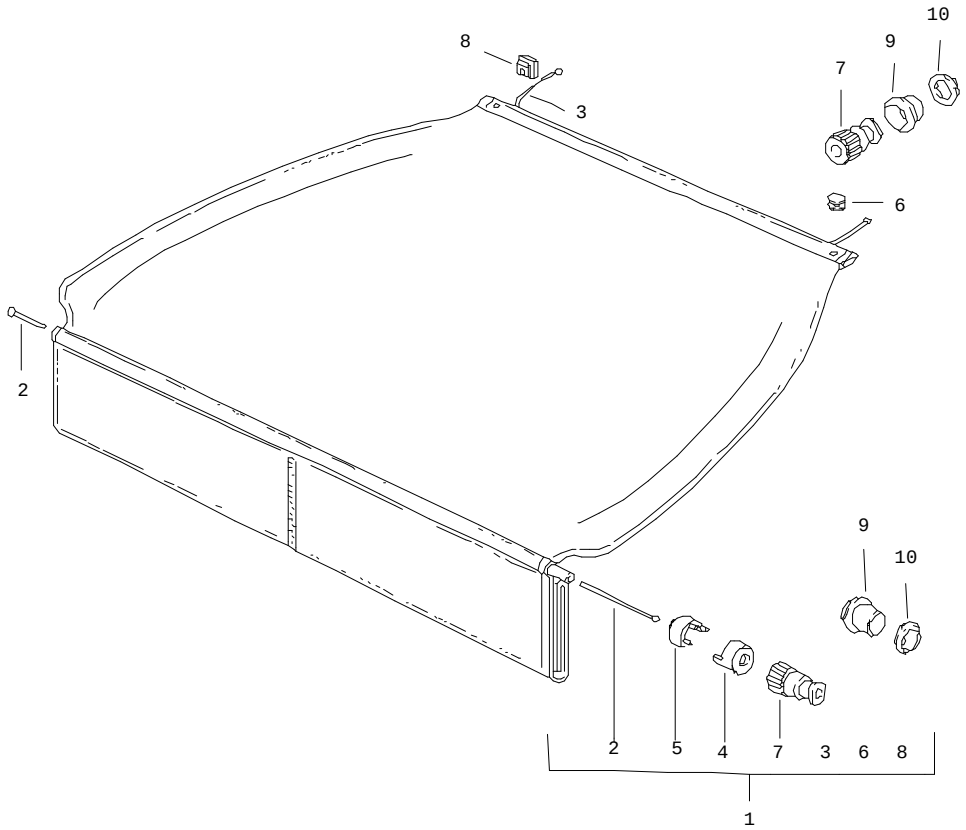

Pos	Part Number	Name	Remarks	Qty	Model
		luggage boot cover			
1	928 555 179 02	luggage boot cover		1	
	70G	black			
	30D	blue	-88		
	40B	brown	-88		
	2LB	burgundy	-90		
	6JG	greyish green	-90		
	7MG	mahogany	-90		
	5KG	marine blue	-90		
	5WG	classic grey	91		
	7ZF	cobalt blue	91		
	7YM	magenta	91		
(1)	928 555 179 03	luggage boot cover		1	M 293/295/ M 496
	70G	black			
	7MG	mahogany			
	5KG	marine blue			
	2LB	burgundy			
	6JG	greyish green	-88		
-	999 701 639 40	round rubber cord		*	
2	-	1150 MM		1	
3	-	740 MM		2	
4	928 555 795 02	end piece of pipe		2	
5	928 555 785 02	clamp		2	
6	900 190 005 03	tubular rivet B 4 X 9 X 6		2	
7	928 555 775 02	end piece		4	
8	928 555 791 02	rose		2	

Pos	Part Number	Name	Remarks	Qty	Model
	70B	black			
9	928 555 777 02	end piece of rope		4	
10	999 591 484 02	clamping washer		4	
		- -- E N D -- -			

Model	Year	MG	SG	Illustration	Restrictions	Update	15:54	02.09.2004	PORSCHE	PET	PORSCHE
928	91	8	10	810-00		179					

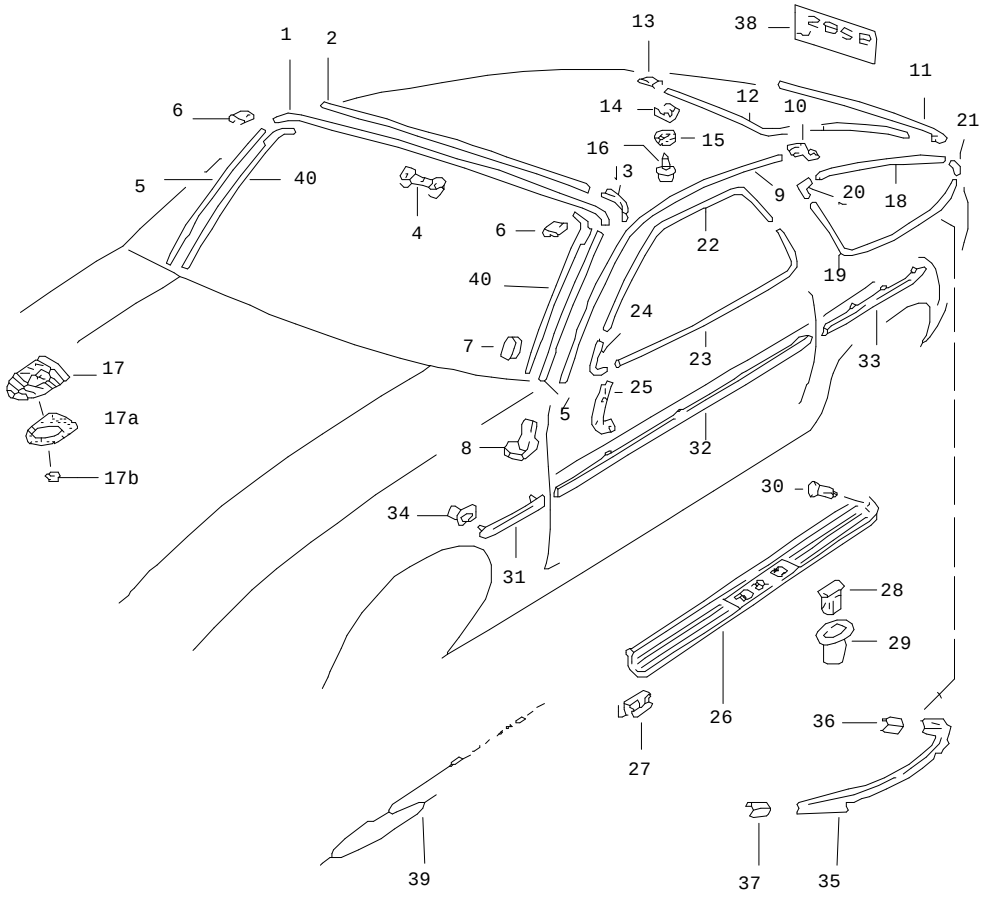

Pos	Part Number	Name	Remarks	Qty	Model
		decorative fittings exterior equipment			
1	928 559 103 04	cover strip		1	
	70K	black			
2	928 559 295 02	adhesive tape		1	
3	928 559 245 03	sealing strap		2	
4	928 559 285 02	clamp		9	
5	928 559 105 05	water drain strip	/L -90	1	
	70K	black			
(5)	928 559 106 05	water drain strip	/R -90	1	
	70K	black			
(5)	928 559 105 07	water drain strip	/L 91	1	
	70K	black			
(5)	928 559 106 07	water drain strip	/R 91	1	
	70K	black			
6	928 559 213 05	sleeve	/L	1	
	70K	black			
6	928 559 214 05	sleeve	/R	1	
	70K	black			
7	928 559 107 02	clamp		8	
8	928 559 111 05	end piece	/L	1	
	70B	black			
(8)	928 559 112 05	end piece	/R	1	
	70B	black			
9	928 559 119 04	roof edge strip	/L	1	
(9)	928 559 120 04	roof edge strip	/R	1	
10	928 559 121 03	roof edge strip	/L	1	

Pos	Part Number	Name	Remarks	Qty	Model
(10)	928 559 122 03	roof edge strip end piece	/R	1	
11	928 559 151 04	cover strip	-87	1	
	70K	black lower			
(11)	928 559 151 05	cover strip	88-	1	
	70K	black lower			
12	928 559 153 06	cover strip	/L	1	
	70K	black lateral for cover with spoiler			
(12)	928 559 153 05	cover strip	/L -89	1	M 471
	70K	black lateral for cover with spoiler			
(12)	928 559 154 06	cover strip	/R	1	
	70K	black lateral for cover with spoiler			
(12)	928 559 154 05	cover strip	/R -89	1	M 471
	70K	black lateral for cover with spoiler			
13	928 559 155 03	sleeve		3	
	70K	black			
14	928 559 133 04	retaining clip	-89	8	M 471
14	928 559 133 04	retaining clip		19	
15	928 559 143 02	sealing ring	-89	8	M 471
15	928 559 143 02	sealing ring		19	
16	999 919 030 02	screw	-89	8	M 471
16	999 919 030 02	screw		19	
17	A 901 559 210 20	lid emblem		1	
17	993 559 211 00	lid emblem		1	
17A	901 559 215 20	desk pad		1	
17B	999 591 423 03	tapping nut		2	
18	928 543 419 10	moulding	/L	1	
	70K	black upper			
(18)	928 543 419 09	moulding	/L -89	1	M 471
	70K	black upper			
(18)	928 543 420 10	moulding	/R	1	
	70K	black upper			
(18)	928 543 420 09	moulding	/R -89	1	M 471
	70K	black upper			
19	928 543 417 10	moulding	/L	1	
	70K	black lower			
(19)	928 543 417 09	moulding	/L -89	1	M 471
	70K	black lower			
(19)	928 543 418 10	moulding	/R	1	
	70K	black lower			
(19)	928 543 418 09	moulding	/R -89	1	M 471
	70K	black lower			

Pos	Part Number	Name	Remarks	Qty	Model
20	928 543 413 04	end piece		2	
	70K	black upper			
21	928 543 415 05	end piece		2	
	70K	black lower			
22	928 537 311 04	moulding	/L	1	
	70K	black upper			
(22)	928 537 312 04	moulding	/R	1	
	70K	black upper			
23	928 537 313 04	moulding	/L	1	
	70K	black lower			
(23)	928 537 314 04	moulding	/R	1	
	70K	black lower			
24	928 537 301 05	moulding connection	/L	1	
	70K	black			
(24)	928 537 302 05	moulding connection	/R	1	
	70K	black			
25	A 928 537 369 03	filler piece	/L -87	1	
(25)	A 928 537 370 03	filler piece	/R -87	1	
25	928 537 369 03	desk pad	/L	1	
25	928 537 370 03	desk pad	/R	1	
-	900 143 114 07	tapping screw B 3,5 X 9,5		2	
26	928 551 055 02	scuff plate	/L	1	
(26)	928 551 056 02	scuff plate	/R	1	
27	928 551 123 02	clamp		12	
28	999 591 451 40	clamp		12	
29	999 702 116 40	grommet oval		12	
(29)	999 702 115 40	grommet round		2	
30	999 591 519 40	expansion rivet		2	
31	928 559 037 03	protective moulding	/L	1	
(31)	928 559 038 03	protective moulding	/R	1	
-	928 559 175 03	adhesive tape wing		2	
32	928 559 033 03	protective moulding	/L	1	
(32)	928 559 034 03	protective moulding door	/R	1	
-	928 559 965 00	adhesive tape door		2	
33	928 559 041 03	protective moulding	/L	1	
(33)	928 559 042 03	protective moulding side section rear	/R	1	
-	928 559 181 03	adhesive tape side section rear		2	
34	928 559 281 02	bush		10	
35	928 543 437 03	trim frame	/L -89	1	M 471
	70K	black rear spoiler			
(35)	928 543 438 03	trim frame	/R -89	1	M 471
	70K	black rear spoiler			
36	928 543 439 03	sleeve	-89	2	M 471
	70K	black trim frame rear spoiler			
37	928 543 439 04	sleeve	/L -89	1	M 471

Pos	Part Number	Name	Remarks	Qty	Model
	70K	black trim frame rear spoiler			
(37)	928 543 440 04	sleeve	/R -89	1	M 471
	70K	black trim frame rear spoiler			
38	928 505 335 06	logo dark grey		1	928 S4
38	928 505 335 07	logo light grey		1	928 S4
38	928 559 921 00	logo prime coated -GT- order also:		1	M 481
-	928 559 421 00	adhesive tape		2	
(38)	928 559 921 01	logo prime coated -S4- order also:		1	M 249
-	928 559 421 01	adhesive tape		2	
39	928 559 339 00	logo black	-89	1	M 637
(39)	928 559 339 01	logo silver	-89	1	M 637
40	928 559 519 00	sealing rubber	91	1	
	70C	black water drain strip windscreen			
(40)	928 559 520 00	sealing rubber	91	1	
	70C	black water drain strip windscreen			
		- -- E N D -- -			

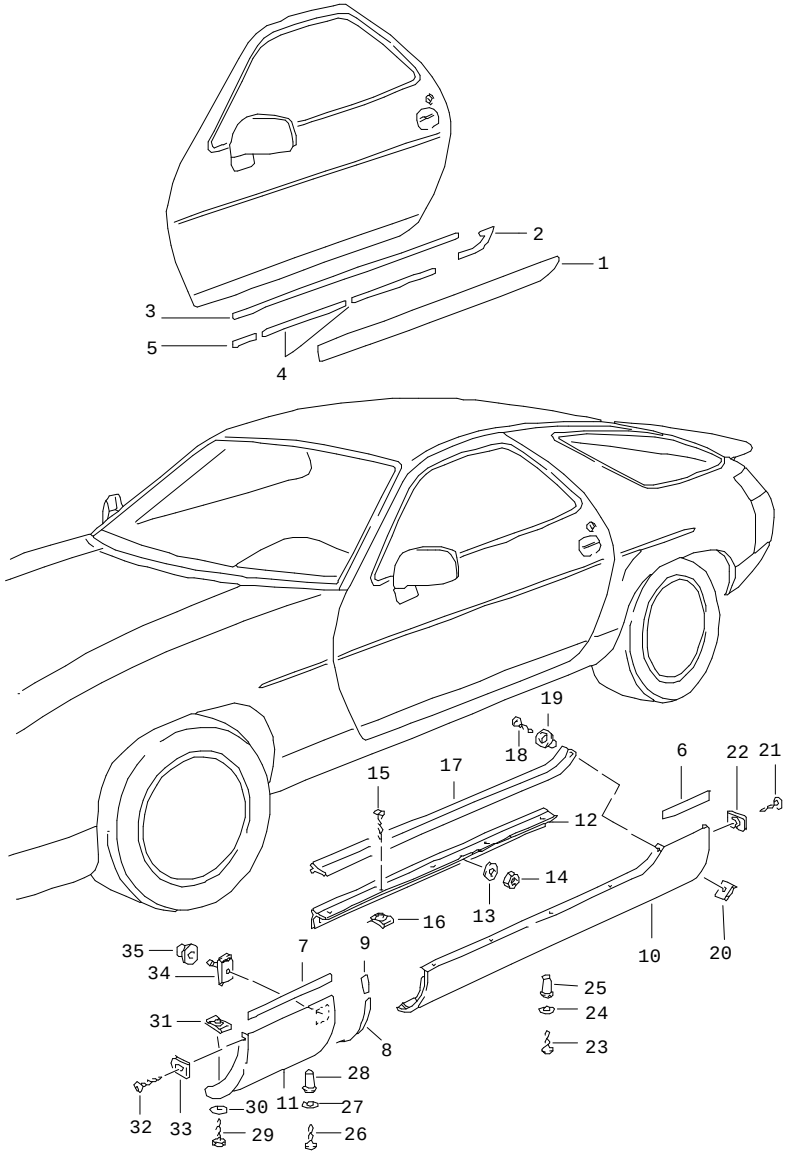

Pos	Part Number	Name	Remarks	Qty	Model
		sill cover			
1	928 559 197 02	sill cover	/L	1	
(1)	928 559 198 02	sill cover door	/R	1	
2	928 559 397 03	adhesive tape	/L	1	
(2)	928 559 398 03	adhesive tape corner panel	/R	1	
-	000 043 113 00	adhesive tape 1120 MM 470 MM 62 MM 185 MM 368 MM 165 MM 78 MM		1	
10	928 559 085 02	sill cover	/L	1	
(10)	928 559 086 02	sill cover door sill	/R	1	
11	928 559 083 02	sill cover	/L	1	
(11)	928 559 084 02	sill cover wing	/R	1	
12	928 504 483 04	door sill rail F >>92HS8 40626 F >>92HS8 49605 F >>92HS8 60788	/L -87	1	(J)
(12)	928 504 483 05	door sill rail F 92HS8 40627>>> F 92HS8 49606>>> F 92HS8 60789>>	/L	1	(J)
(12)	928 504 484 04	door sill rail F >>92HS8 40626 F >>92HS8 49605 F >>92HS8 60788	/R -87	1	(J)
(12)	928 504 484 05	door sill rail F 92HS8 40627>>> F 92HS8 49606>>> F 92HS8 60789>>	/R	1	(J)
13	N 011 524 7	washer A 6,4		10	

Pos	Part Number	Name	Remarks	Qty	Model
14	900 910 096 02	lock nut M 6		10	
15	900 144 034 07	tapping screw B 4,2 X 16		10	
16	999 591 797 02	speed nut B 4,2		10	
17	928 559 289 04	cover strip F >>92HS8 40626 F >>92HS8 49605 F >>92HS8 60788	/L -87	1	(J)
(17)	928 559 290 04	cover strip F >>92HS8 40626 F >>92HS8 49605 F >>92HS8 60788	/R -87	1	(J)
(17)	928 559 289 05	cover strip F 92HS8 40627>> F 92HS8 49606>> F 92HS8 60789>>	/L	1	(J)
	70B	black			
(17)	928 559 290 05	cover strip F 92HS8 40627>> F 92HS8 49606>> F 92HS8 60789>>	/R	1	(J)
	70B	black			
18	900 144 035 07	tapping screw B 4,2 X 19		2	
19	928 559 314 00	spacer sleeve		2	
20	999 591 873 02	speed nut B 4,2		2	
21	900 144 033 07	tapping screw B 4,2 X 13 F >>92HS8 40080 F >>92HS8 49560 F >>92HS8 60065		2	(J)
22	999 591 787 09	speed nut B 4,2 F >>92HS8 40080 F >>92HS8 49560 F >>92HS8 60065		2	(J)
23	900 143 085 07	tapping screw B 4,2 X 16		12	
24	N 011 665 3	washer B 5,3		12	
25	999 591 717 40	expander nut B 4,2		12	
26	900 143 147 07	tapping screw B 4,8 X 16		2	
27	N 011 665 3	washer B 5,3		2	
28	999 591 779 40	expander nut B 4,8		2	
29	900 187 010 02	tapping screw BZ 6,3 X 19		2	
30	900 151 008 02	washer B 8,4		2	
31	999 507 003 02	speed nut B 6,3		2	
32	900 144 033 07	tapping screw B 4,2 X 13 F >>92HS8 40080 F >>92HS8 49560 F >>92HS8 60065		2	(J)
33	999 591 787 09	speed nut B 4,2 F >>92HS8 40080 F >>92HS8 49560 F >>92HS8 60065		2	(J)
34	928 559 281 02	bush		2	
35	928 559 273 00	support		2	
		- -- E N D -- -			

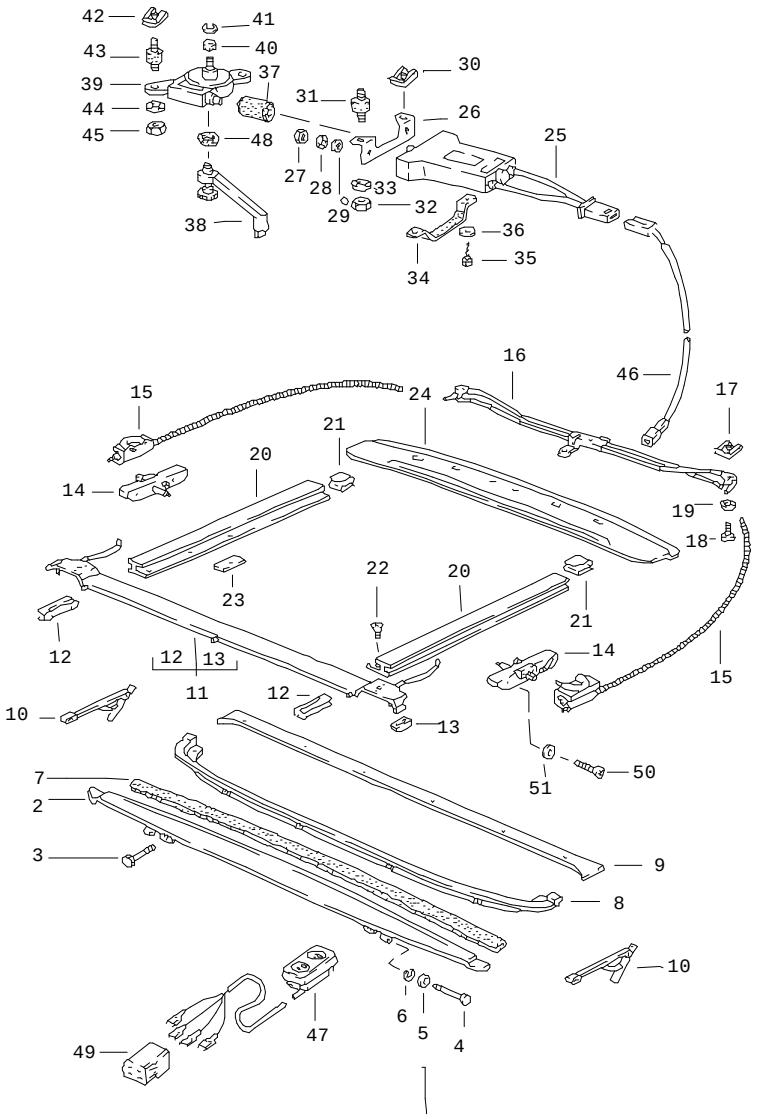

Pos	Part Number	Name	Remarks	Qty	Model
		sunroof electrically adjustable			
2	928 564 023 03	wind deflector plate		1	
	70K	black			
3	999 217 078 07	hexagon-head bolt M 4 X 6		2	
4	999 088 009 07	bolt		2	
5	900 089 015 07	washer		2	
6	900 116 001 07	lock washer		2	
7	928 564 358 02	protective edging		1	
8	928 564 341 03	cover		1	
9	928 564 105 03	cover strip		1	
10	928 564 057 02	hinge	/L	1	
10	928 564 058 02	hinge	/R	1	
11	928 564 061 40	guide	/V	1	
12	928 564 267 02	slide		2	
13	928 564 268 03	guide shoe		2	
14	928 564 045 42	guide	/L	1	
14	928 564 046 42	guide	/R	1	
15	928 564 083 43	guide	/L	1	
15	928 564 084 43	guide	/R	1	
16	928 564 209 40	guide tube		1	
17	999 507 248 02	speed nut M 5		2	
18	N 014 133 8	oval-head screw M 5 X 12		3	
19	N 012 005 3	lock ring B 5		2	
20	928 564 015 42	guide rail	/L	1	
20	928 564 016 42	guide rail	/R	1	

Pos	Part Number	Name	Remarks	Qty	Model
21	999 591 448 02	fixing clip		2	
22	900 269 052 07	countersunk-head screw M 4 X 10		6	
23	928 502 617 60	threaded plate M 4		2	
24	928 564 167 41	water drain plate		1	
25	911 624 016 03	motor		1	
26	928 624 105 02	motor console		1	
27	N 011 005 14	hexagon nut M 5		2	
28	N 012 005 3	lock ring B 5		2	
29	900 025 003 02	washer A 5,3		2	
30	999 507 248 02	speed nut M 5		1	
31	999 703 308 00	bonded rubber mounting		2	
32	N 011 005 14	hexagon nut M 5		2	
33	N 012 005 3	lock ring B 5		2	
34	928 624 011 02	motor mount		1	
35	N 013 883 3	tapping screw B 4,8 X 9,5		1	
36	900 025 003 02	washer A 5,3		1	
37	911 624 103 00	clutch		1	
38	901 564 085 05	crank		1	
39	928 564 025 02	transmission		1	
40	928 564 125 02	drive pinion		1	
41	900 116 003 02	circlip		1	
42	999 507 248 02	speed nut		2	
43	999 703 306 00	bonded rubber mounting		2	
44	N 012 005 3	lock ring B 5		2	
45	N 011 005 14	hexagon nut M 5		2	
46	928 612 006 01	wiring harness		1	
47	928 613 120 00	tip switch	-89	1	M 650
(47)	928 613 120 02	tip switch	90-	1	M 650
	01C	black			
48	901 564 663 05	cap		1	
49	928 612 413 03	connector housing		1	
50	999 217 008 02	hexagon-head bolt M 5 X 10		4	
51	900 025 003 02	washer A 5,3		4	
		- -- E N D -- -			

Model	Year	MG	SG	Illustration	Restrictions	Update	15:55	02.09.2004	PORSCHE	PET	PORSCHE
928	91	8	12	812-00		179					

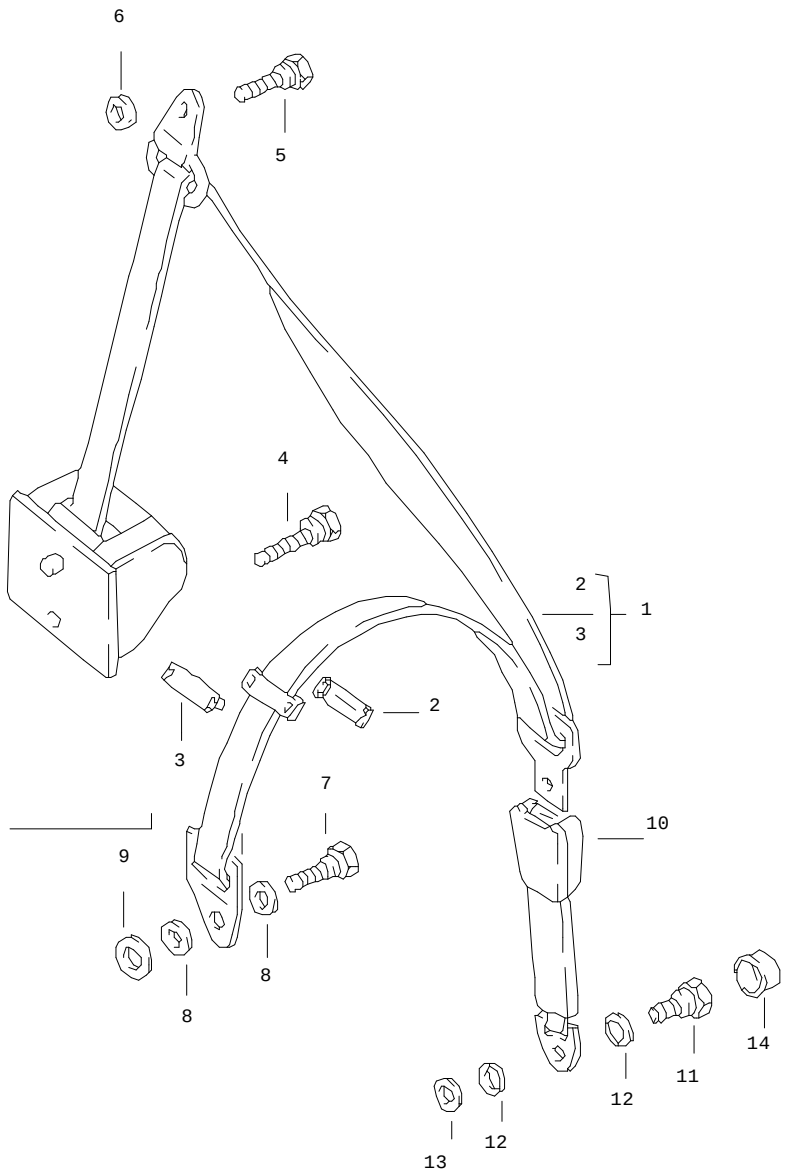

Pos	Part Number	Name	Remarks	Qty	Model
		seat belt automatic front			
1	928 803 126 10	seat belt	-90	2	
	70B	black			
(1)	928 803 033 00	seat belt	91	2	
	70B	black			
2	928 803 151 02	clip upper part	-90	2	
3	928 803 153 02	clip lower part	-90	2	
4	928 803 121 02	fastening screw		2	
5	111 857 793 E	fastening screw for relay lever		2	
6	928 803 212 02	spacer		2	
7	111 857 793 E	fastening screw		2	
8	211 857 771	washer		4	
9	928 803 212 02	spacer		2	
10	928 803 183 13	seat-belt buckle driver's side F >>92KS8 41283		1	
	70B	black			
10	928 803 183 12	seat-belt buckle passenger's side F >>92KS8 41283		1	
	70B	black			
10	964 803 183 01	seat-belt buckle		1	
	70B	black driver's side F 92KS8 41284>>			
10	964 803 183 00	seat-belt buckle		1	

Pos	Part Number	Name	Remarks	Qty	Model
	70B	black passenger's side F 92KS8 41284>>			
(10)	964 803 183 05	seat-belt buckle		1	
	70B	black driver's side for sports seat F 92KS8 41284>>			
(10)	964 803 183 04	seat-belt buckle		1	
	70B	black passenger's side for sports seat F 92KS8 41284>>			
11	914 803 468 10	screw F >>92KS8 41283		2	
(11)	959 803 701 00	hexagon-head bolt F 92KS8 41284>>		2	
12	911 803 533 00	cup spring F >>92KS8 41283		4	
(12)	999 028 014 02	spring washer F 92KS8 41284>>		2	
13	911 803 531 00	paper washer F >>92KS8 41283		2	
(13)	N 011 655 2	washer F 92KS8 41284>>		2	
14	811 857 845	cap		2	
	70B	black			
		- -- E N D -- -			

Model	Year	MG	SG	Illustration	Restrictions	Update	15:55	02.09.2004	PORSCHE	PET	PORSCHE
928	91	8	12	812-05		179					

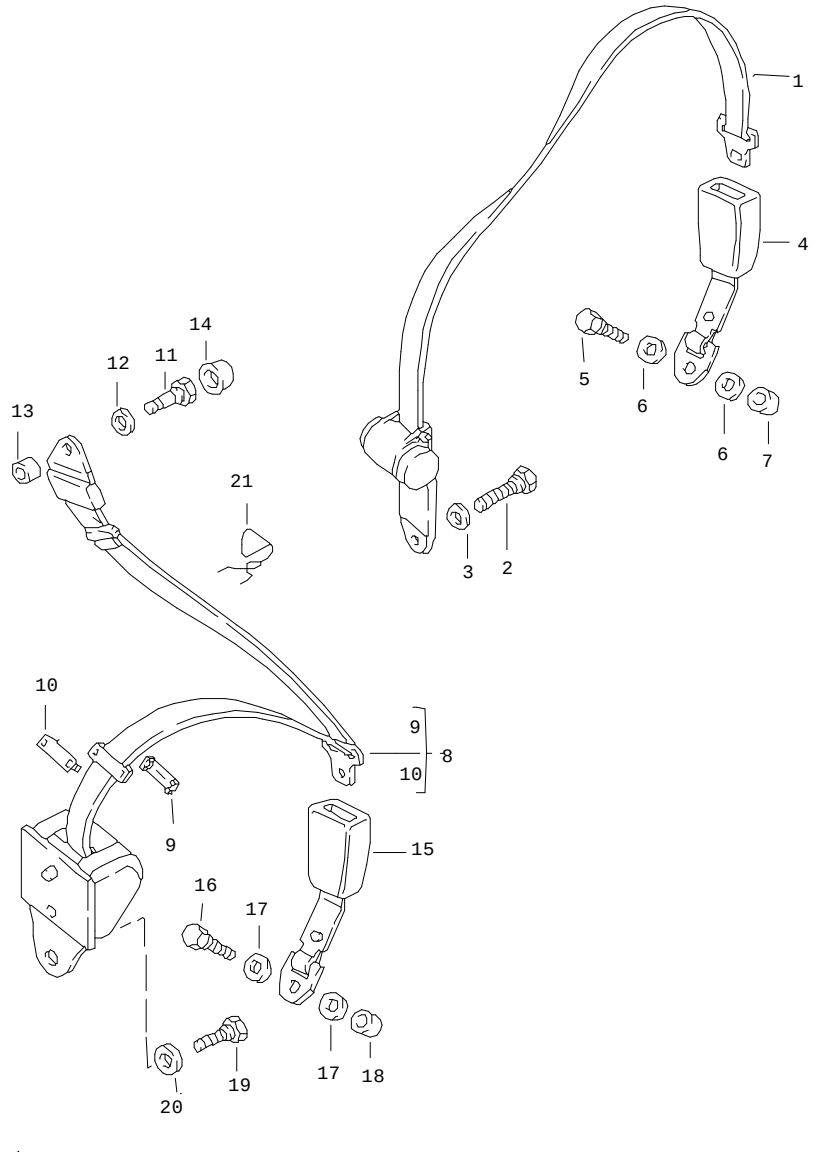

Pos	Part Number	Name	Remarks	Qty	Model
		seat belt rear			
1	928 803 015 06	lap belt automatic	/L -88	1	
	70B	black			
(1)	928 803 016 06	lap belt automatic	/R -88	1	
	70B	black			
1	928 803 015 07	lap belt automatic	/L 89	1	
	70B	black			
(1)	928 803 016 07	lap belt automatic	/R 89	1	
	70B	black			
2	111 857 799 A	fastening screw		2	
3	111 857 707 A	spacer		2	
4	928 803 091 02	lock		2	
5	111 857 793 E	fastening screw		2	
6	211 857 771	washer		4	
7	928 803 259 02	spacer sleeve		2	
8	927 803 021 03	seat belt automatic	/L -87	1	M 335
(8)	927 803 021 04	seat belt automatic	/L -88	1	M 335
	70B	black			
(8)	927 803 021 05	seat belt automatic	/L 89-	1	M 335
	70B	black			
(8)	927 803 022 03	seat belt automatic	/R -87	1	M 335
(8)	927 803 022 04	seat belt automatic	/R -88	1	M 335

Pos	Part Number	Name	Remarks	Qty	Model
	70B	black			
(8)	927 803 022 05	seat belt automatic	/R 89-	1	M 335
	70B	black			
9	928 803 151 02	clip upper part		2	
10	928 803 153 02	clip lower part		2	
11	111 857 793 E	fastening screw		2	
(11)	111 857 793 C	fastening screw		2	
12	211 857 771	washer		2	
13	901 803 116 40	spacer sleeve		2	
14	811 857 845	cap		2	
	70B	black			
15	928 803 091 02	lock		2	
16	111 857 793 E	fastening screw		2	
17	211 857 771	washer		4	
18	928 803 259 02	spacer sleeve		2	
19	111 857 799 A	fastening screw		2	
20	111 857 707 A	spacer		2	
21	928 803 243 05	eye		2	(AUS)
		- -- E N D -- -			

Pos	Part Number	Name	Remarks	Qty	Model

Model	Year	MG	SG	Illustration	Restrictions	Update				
928	91	8	13	813-05		179	15:55	02.09.2004	PORSCHE	PET	PORSCHE

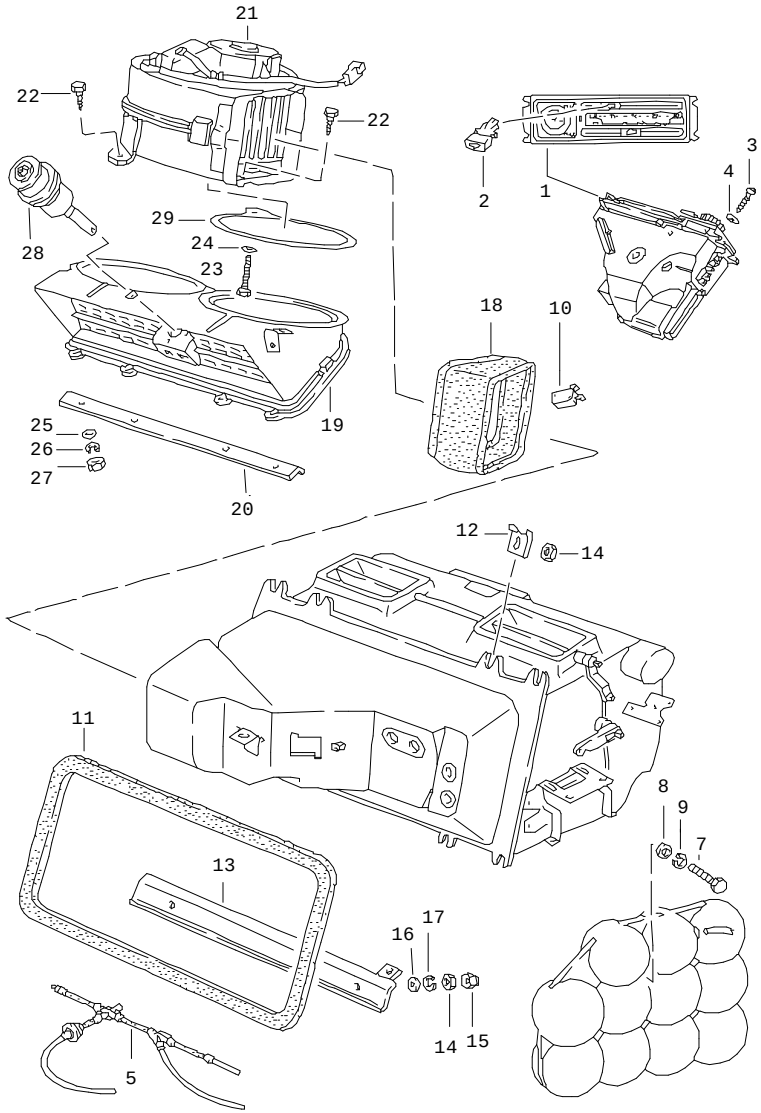

Pos	Part Number	Name	Remarks	Qty	Model
		air conditioner control switch lines air duct			
1	928 573 060 08	control switch	-90	1	
(1)	928 573 060 10	control switch	91	1	
2	928 574 093 03	control button blower switch and rotary knob see group 9/03/00 POS. 10+12		2	
	70B	black			
3	999 919 008 07	oval-head screw 3,9 X 13		4	
4	N 011 522 14	washer A 4,3		4	
5	928 574 710 09	vacuum line	/LL -90	1	
(5)	928 574 710 10	vacuum line	/LL	1	M 454
(5)	927 574 710 08	vacuum line	/RL -90	1	
(5)	927 574 710 09	vacuum line	/RL	1	M 454
6	171 820 601	vacuum tank		1	
7	N 010 221 3	hexagon-head bolt M 6 X 35		1	
8	N 011 524 7	washer A 6,4		1	
9	N 012 006 4	lock ring B 6,4		1	
10	928 613 049 01	micro-changeover switch		1	
11	928 574 387 02	gasket		1	
12	928 574 581 02	clip		2	
13	928 556 301 02	reinforcement bracket	-89	1	
14	900 076 010 02	hexagon nut M 6	-89	6	

Pos	Part Number	Name	Remarks	Qty	Model
15	900 070 002 02	cap nut M 6	-89	2	
16	N 011 524 7	washer A 6,4	-89	4	
17	N 012 006 4	lock ring B 6	-89	6	
18	928 574 389 04	rubber		1	
19	928 573 031 05	suction housing	/LL	1	
(19)	927 573 031 03	suction housing	/RL	1	
20	928 556 303 02	reinforcement bracket		1	
21	928 574 033 05	blower	/LL	1	
(21)	927 574 033 04	blower	/RL	1	
22	900 187 104 02	tapping screw B 4,8 X 13		2	
23	900 187 033 02	tapping screw B 4,8 X 50		1	
24	900 151 002 07	washer A 5,3		1	
25	N 011 524 7	washer A 6,4		4	
26	N 012 006 4	lock ring B 6		4	
27	900 076 010 02	hexagon nut M 6		4	
28	928 573 077 04	vacuum unit suction housing		1	
-	999 915 270 40	gasket 6 X 15		*	
29	928 574 133 02	gasket		1	
		- -- E N D -- -			

Pos	Part Number	Name	Remarks	Qty	Model

Model	Year	MG	SG	Illustration	Restrictions	Update	15:56	02.09.2004	PORSCHE	PET	PORSCHE
928	91	8	13	813-10		179					

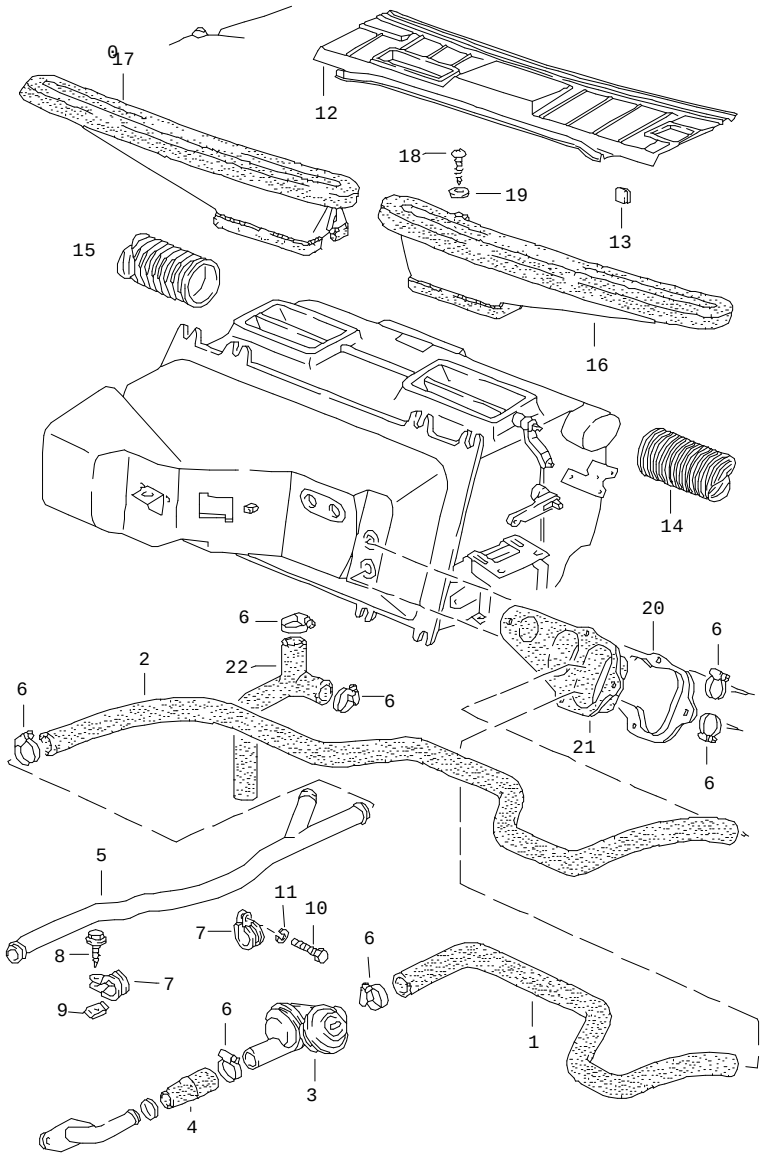

Pos	Part Number	Name	Remarks	Qty	Model
		air conditioner hoses heating nozzles			
1	928 574 587 03	heater hose intake	/LL	1	
(1)	927 574 587 03	heater hose intake	/RL	1	
(2)	928 574 589 04	heater hose return	/LL	1	
(2)	927 574 589 03	heater hose return	/RL	1	
3	A 928 574 573 03	disc valve		1	
3	928 574 573 03	disc valve		1	
(4)	928 574 567 03	connecting hose		1	
5	928 574 106 03	heater pipeline	/LL	1	
(5)	927 574 106 04	heater pipeline	/RL	1	
6	999 512 346 00	hose clamp		6	
7	999 511 066 02	clamp		2	
8	900 187 108 02	tapping screw BZ 6,3 X 16		1	
9	999 507 003 02	speed nut B 6,3 X 16		1	
10	900 075 014 02	hexagon-head bolt M 6 X 18		1	
11	N 012 006 4	lock ring B 6		1	
12	928 574 553 05	cowl panel covering	/LL -91	1	
(12)	927 574 157 00	cowl panel covering	/RL -91	1	
13	999 920 005 02	u-clamp		4	
14	928 574 626 02	flexible pipe	LL/L	1	M 573
(14)	928 572 228 00	air duct	90-	1	
15	928 574 625 02	flexible pipe	-89	1	

Pos	Part Number	Name	Remarks	Qty	Model
(15)	928 572 227 00	air duct	90-	1	
(15)	928 572 625 00	flexible pipe	90-	1	
16	928 574 631 02	defroster vent	-89	1	
(16)	928 574 632 02	defroster vent	90-	1	
17	928 574 631 02	defroster vent	-89	1	
(17)	928 574 632 02	defroster vent	90-	1	
-	928 574 652 05	gasket lower	90-	2	
18	900 143 031 02	oval-head sheetmetal screw B 4,2 X 9,5		4	
19	900 025 002 02	washer A 4,3		4	
20	928 573 065 03	cover	/LL	1	
(20)	927 573 065 03	cover	/RL	1	
21	928 573 551 03	plate	/LL	1	
(21)	927 573 551 03	plate	/RL	1	
22	928 574 583 04	water drain hose		1	
		- -- E N D -- -			

Pos	Part Number	Name	Remarks	Qty	Model

Model	Year	MG	SG	Illustration	Restrictions	Update	15:56	02.09.2004	PORSCHE	PET	PORSCHE
928	91	8	13	813-15		179					

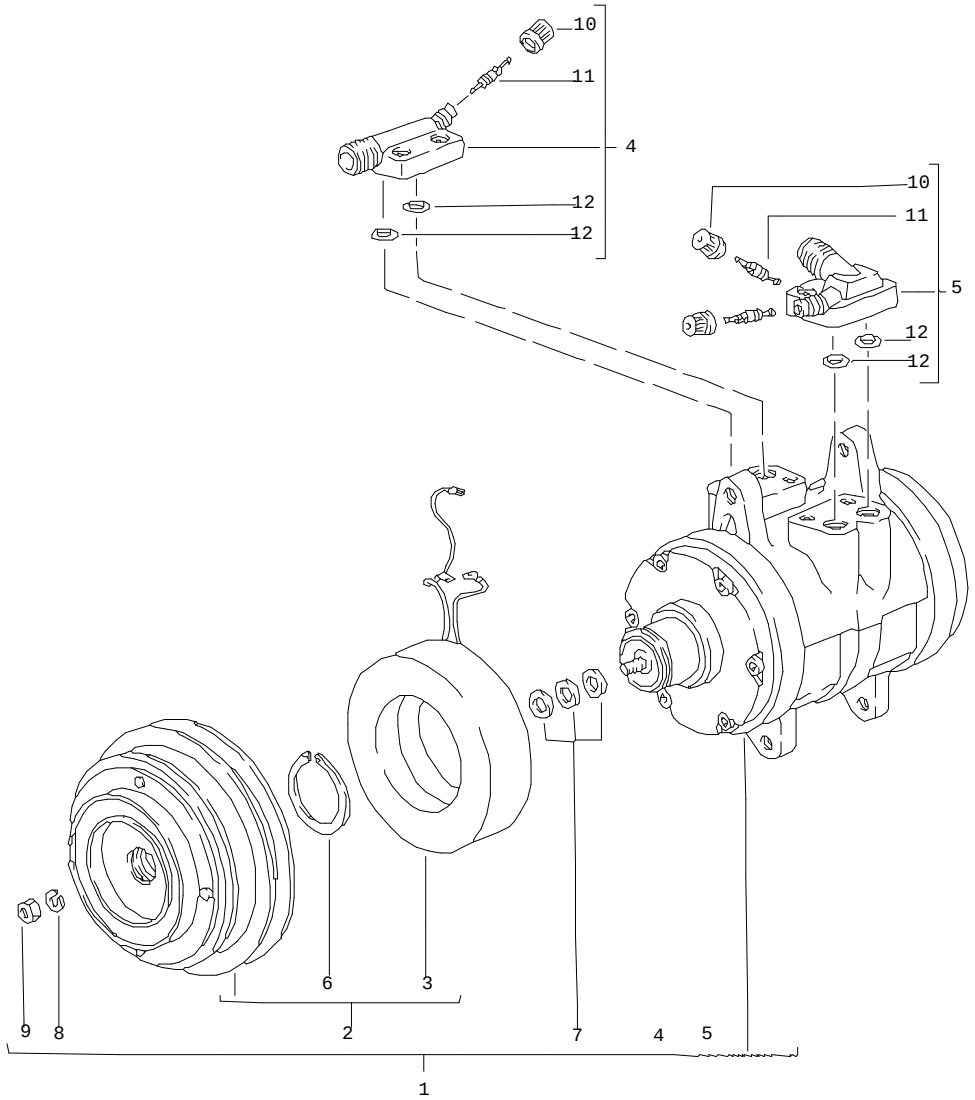

Pos	Part Number	Name	Remarks	Qty	Model
		air conditioner compressor	-89		
1	928 126 010 06	compressor		1	
2	928 126 901 00	clutch		1	
3	928 126 925 00	solenoid coil		1	
4	928 126 904 00	pressure valve		1	
5	928 126 903 00	suction valve		1	
6	477 298 843	circlip		1	
7	477 298 829	spacer 0,1 MM		X	
(7)	477 298 829 A	spacer 0,2 MM		X	
(7)	477 298 829 B	spacer 0,5 MM		X	
(7)	477 298 829 C	spacer 0,8 MM		X	
(7)	477 298 829 B	spacer 1,0 MM		X	
8	900 027 015 02	lock ring B8		1	
9	N 011 008 8	hexagon nut M8		1	
10	928 573 909 02	cap		2	
11	928 573 908 03	valve insert		2	
12	944 126 935 01	o-ring		4	
		- -- E N D -- -			

Model	Year	MG	SG	Illustration	Restrictions	Update				
928	91	8	13	813-20		179	15:56	02.09.2004	PORSCHE	PET	PORSCHE

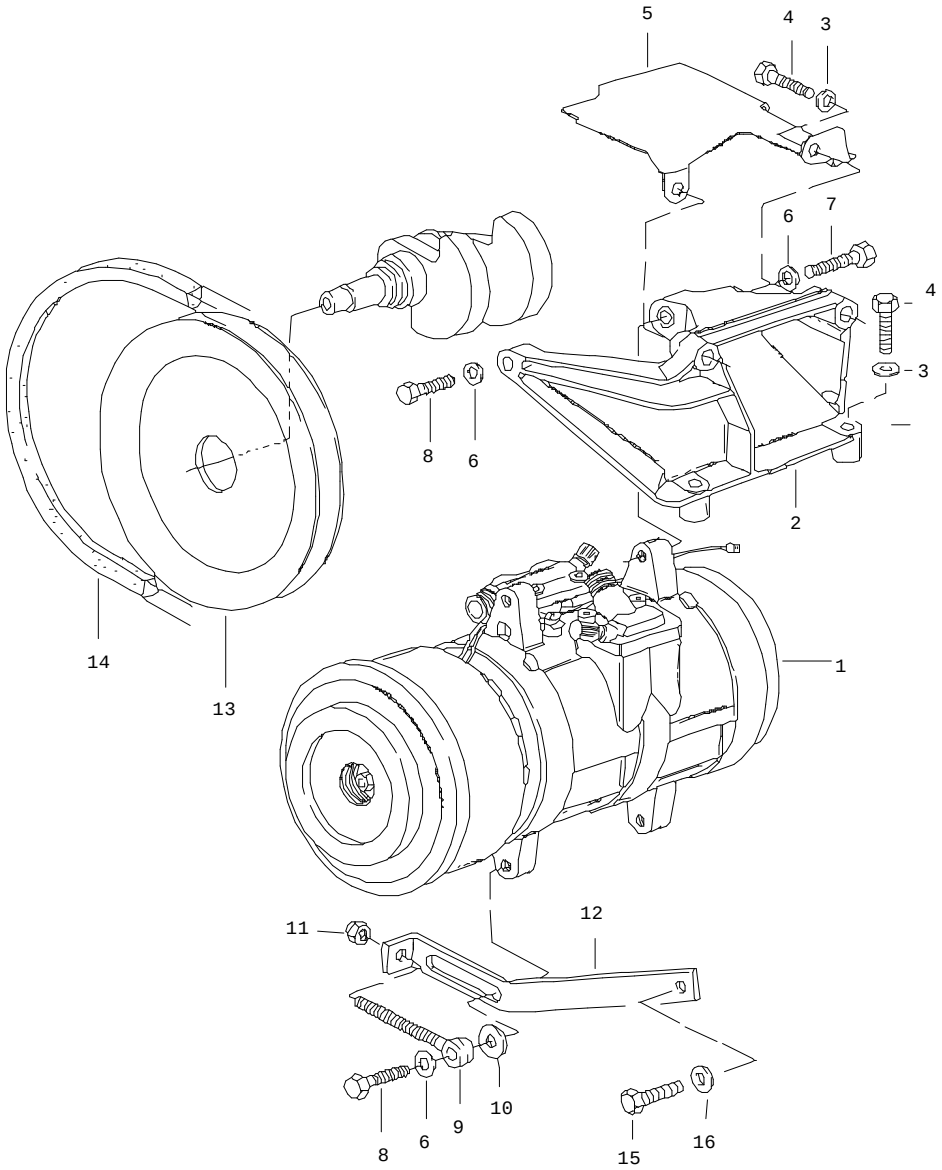

Pos	Part Number	Name	Remarks	Qty	Model
		compressor assembly	-89		
1	928 126 010 06	compressor		1	
2	928 126 017 04	bracket		1	
3	900 025 007 02	washer A 8,4		4	
4	N 010 340 6	hexagon-head bolt M 8 X 40		4	
5	928 126 116 02	cover plate		1	
6	900 025 008 09	washer A 10,5		3	
7	900 083 059 02	hexagon-head bolt M 10 X 45		1	
8	900 083 057 02	hexagon-head bolt M 10 X 33		2	
9	999 460 003 02	eye screw		1	
10	928 101 303 00	washer		1	
11	900 084 004 02	hexagon nut M 8		1	
12	928 126 123 03	strut		1	
13	928 102 118 03	v-belt pulley	-89	1	
14	999 192 305 50	narrow v-belt 12,5 X 1125		1	
15	N 010 233 6	hexagon-head bolt M 8 X 28		1	
16	900 025 007 02	washer A 8,4		1	
		- -- E N D -- -			

Model	Year	MG	SG	Illustration	Restrictions	Update				
928	91	8	13	813-21		179	15:56	02.09.2004	PORSCHE	PET	PORSCHE

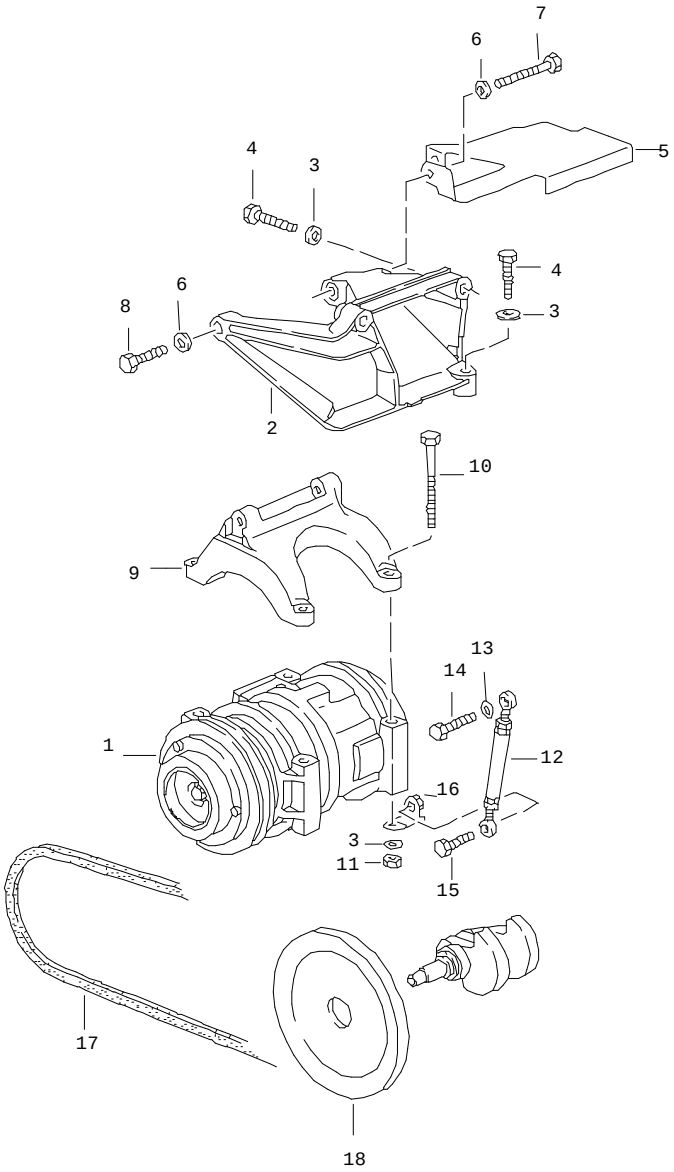

Pos	Part Number	Name	Remarks	Qty	Model
		compressor assembly	90-		
1	928 126 113 00	compressor		1	
2	928 126 017 04	bracket		1	
3	900 025 007 02	washer A 8,4		4	
4	N 010 340 6	hexagon-head bolt M 8 X 40		4	
5	928 126 116 02	cover plate		1	
6	900 025 008 09	washer A 10,5		3	
7	900 083 059 02	hexagon-head bolt M 10 X 45		1	
8	900 083 057 02	hexagon-head bolt M 10 X 33		2	
(8)	900 083 048 02	hexagon-head bolt M 10 X 1,25 X 40	90-	1	
9	928 126 035 00	support		1	
10	N 101 111 01	hexagon-head bolt M 8 X 95		4	
(10)	N 101 111 01	hexagon-head bolt M 8 X 95	90-	1	
(10)	900 074 195 02	hexagon-head bolt M 8 X 100	90-	3	
11	900 076 025 02	hexagon nut M 8		4	
12	928 126 123 04	strut		1	
13	900 025 007 02	washer A 8,4		1	
14	N 040 222 2	hexagon-head bolt M 8 X 32		1	
(14)	N 010 233 6	hexagon-head bolt M 8 X 28	90-	1	
15	N 100 067 01	hexagon-head bolt M 8 X 22		1	

Model	Year	MG	SG	Illustration	Restrictions	Update				
928	91	8	13	813-21		179	15:56	02.09.2004	PORSCHE	PET	PORSCHE

Pos	Part Number	Name	Remarks	Qty	Model	Pos	Part Number	Name	Remarks	Qty	Model
(15)	900 074 321 02	hexagon-head bolt M 8 X 40	90-	1							
16	928 126 139 01	bracket	90-	1							
18	928 102 118 04	v-belt pulley		1							
17	999 192 335 50	narrow v-belt 12,5 X 1080		1							
		- -- E N D -- -									

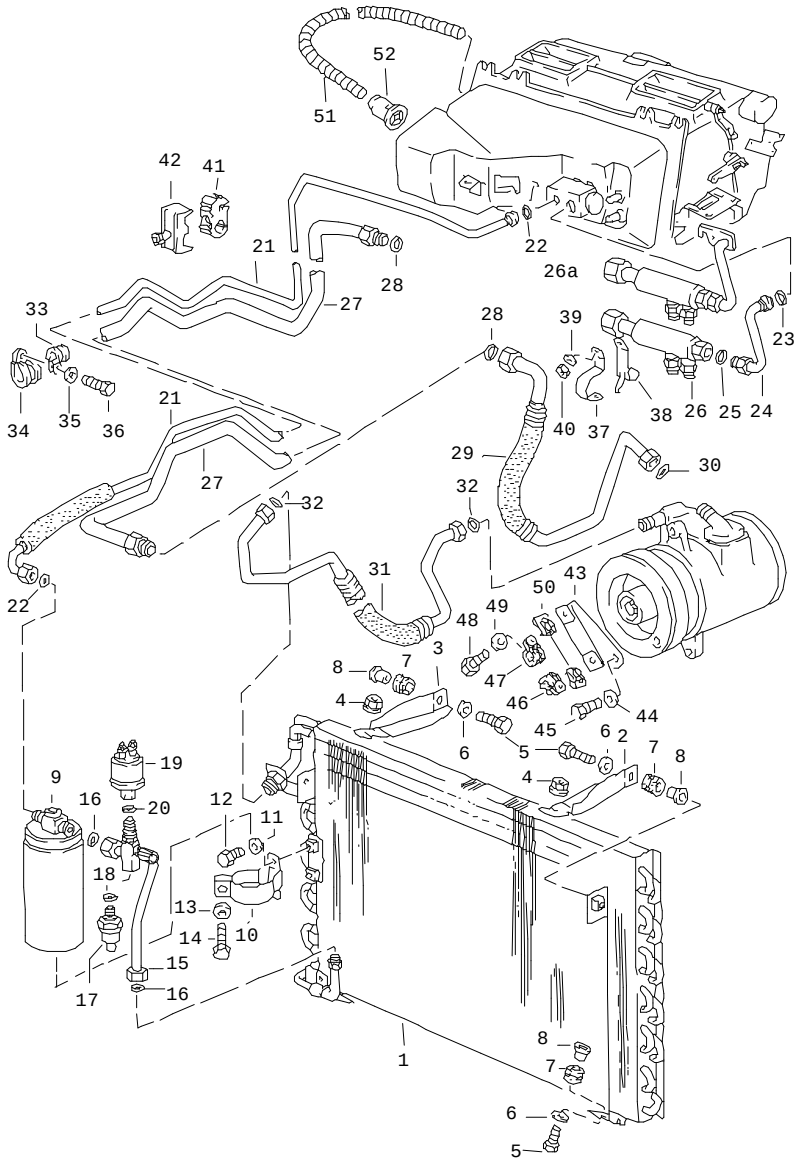

Pos	Part Number	Name	Remarks	Qty	Model
		air conditioner lines auxiliary units			
1	928 573 011 06	condenser		1	M 481
(1)	928 573 021 00	condenser		1	M 249
2	928 573 101 03	retaining bracket	/L	1	
3	928 573 102 03	retaining bracket	/R	1	
4	999 084 613 02	lock nut M 6		2	
5	N 010 217 9	hexagon-head bolt M 6 X 20		4	
6	900 151 003 02	washer A 6,4		4	
7	999 702 046 50	rubber sleeve		4	
8	928 573 347 03	spacer tube		4	
(9)	944 573 943 00	desiccator		1	
10	944 573 081 00	support		1	
11	900 025 003 02	washer A 5,3		2	
12	N 010 207 6	hexagon-head bolt M 5 X 12		2	
13	900 025 003 02	washer A 5,3		1	
14	900 075 145 02	hexagon-head bolt M 5 X 15		1	
15	928 573 095 04	connecting tube		1	
16	999 707 247 40	o-ring		2	
17	959 613 137 00	low pressure switch		1	
18	900 174 011 40	o-ring		1	
19	928 606 150 00	pressure transmitter		1	
20	999 707 261 40	o-ring		1	

Pos	Part Number	Name	Remarks	Qty	Model
21	928 573 093 08	pressure line NW 8	/LL	1	
(21)	927 573 093 09	pressure line NW 8	/RL	1	
22	999 707 247 40	o-ring		2	
23	999 707 251 40	o-ring		1	
24	928 573 092 03	intake pipe NW 13 F >>92HS8 41972 F >>92HS8 49744	/LL	1	 (J)
(24)	927 573 092 03	intake pipe NW 13 F >>92HS8 41972	/RL	1	
25	999 707 252 40	o-ring F >>92HS8 41972 F >>92HS8 41972 F >>92HS8 49744	 /LL /RL	1	 (J)
26	928 573 063 03	fuel cooler F >>92HS8 41972 F >>92HS8 49744	/LL	1	 (J)
26A	928 573 063 05	fuel cooler F 92HS8 41973>> F 92HS8 49745>>	/LL	1	 (J)
(26A)	927 573 063 01	fuel cooler	/RL 88	1	
(26A)	927 573 063 01	fuel cooler	/RL 89-	1	
27	928 573 091 10	intake pipe NW 16		1	
28	999 707 252 40	o-ring		2	
29	928 573 098 05	hose line NW 16	-89	1	
(29)	928 573 098 05	hose line NW 16	-89	1	M 637 M 637
(29)	928 573 098 06	hose line NW 13	90-	1	
30	999 707 251 40	o-ring		1	
31	928 573 097 06	hose line NW 10	-89	1	
(31)	928 573 097 09	refrigerant line NW 10	-89	1	M 637 M 637
(31)	928 573 097 09	refrigerant line NW 10	90-	1	
32	999 707 250 40	o-ring		2	
33	999 511 116 02	clamp		1	
34	999 511 066 02	clamp		1	
35	N 012 006 4	lock ring B 6		1	
36	900 075 014 02	hexagon-head bolt M 6 X 18		1	
37	928 573 809 02	support fuel cooler	/V	1	
38	928 573 807 02	support fuel cooler	/H	1	
39	N 011 524 7	washer A 6,4		1	
40	900 076 010 02	hexagon nut M 6		1	
41	999 703 353 40	damping piece		1	
42	999 591 863 40	clamp		1	
43	928 573 411 02	angle	-89	1	
44	900 025 008 09	washer A 10,5		1	
45	900 083 026 02	hexagon-head bolt M 10 X 1,25 X 20		1	
46	N 020 601 1	clip		1	
47	999 511 118 02	clip		1	
48	900 075 057 02	hexagon-head bolt M 6 X 16		2	
49	N 011 524 7	washer A 6,4		2	
50	999 507 326 02	captive nut M 6		2	

Model	Year	MG	SG	Illustration	Restrictions	Update			
928	91	8	13	813-25		179	15:56	02.09.2004	PORSCHE PET PORSCHE

Pos	Part Number	Name	Remarks	Qty	Model	Pos	Part Number	Name	Remarks	Qty	Model
51	928 573 357 02	hose 850 MM		1							
52	928 573 355 02	intake socket		1							
		- -- E N D -- -									

Model	Year	MG	SG	Illustration	Restrictions	Update				
928	91	8	13	813-26		179	15:57	02.09.2004	PORSCHE	PET	PORSCHE

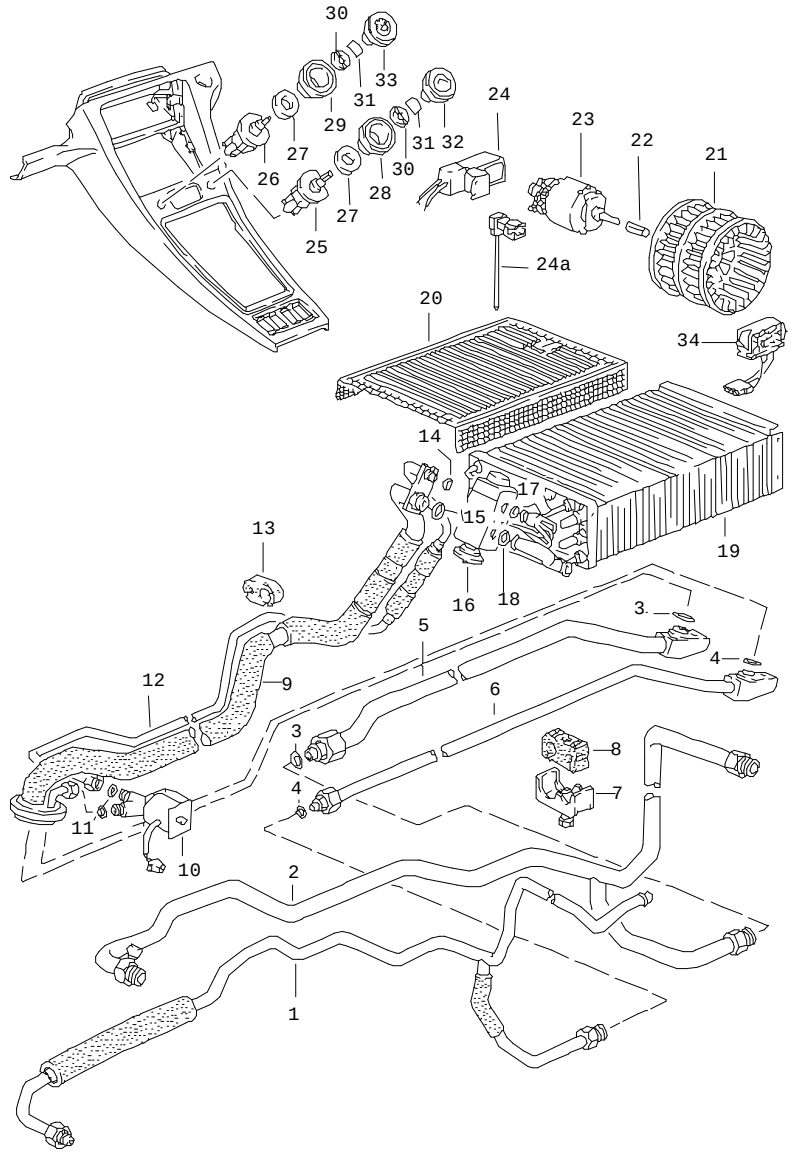

Pos	Part Number	Name	Remarks	Qty	Model
		air conditioner lines auxiliary units			M 570
1	928 570 093 04	pressure line NW 8	/LL	1	
(1)	927 570 093 03	pressure line NW 8	/RL	1	
2	928 570 091 03	intake pipe NW 16		1	
3	999 707 251 40	o-ring		2	
4	999 707 247 40	o-ring		2	
5	928 570 101 02	refrigerant line NW 13		1	
6	928 570 103 02	refrigerant line NW 8		1	
7	999 591 863 40	clamp		1	
8	999 591 864 40	rubber mounting		1	
9	928 570 105 01	refrigerant line		1	
10	928 615 201 01	solenoid valve		1	
11	999 707 284 40	o-ring		2	
12	928 570 109 03	refrigerant line		1	
13	928 570 455 00	rubber mounting		1	
14	999 707 247 40	o-ring		1	
15	999 707 251 40	o-ring		1	
16	928 573 123 05	expansion valve		1	
17	999 707 250 40	o-ring		1	
18	999 707 251 40	o-ring		1	
19	928 570 211 00	evaporator		1	
20	928 570 291 00	grille		1	
21	928 570 212 00	impeller		1	
22	928 570 295 00	bush		1	

Pos	Part Number	Name	Remarks	Qty	Model
23	928 624 117 00	blower motor		1	
24	928 618 041 01	control unit		1	
-	928 612 222 01	wiring harness control unit connection point		1	
24A	928 612 222 01	wiring harness		1	
-	928 612 221 01	wiring harness connection point centre console		1	
25	928 613 153 00	potentiometer		1	
26	911 613 243 00	blower switch		1	
27	928 613 171 00	spacer		2	
28	928 613 178 00	rose interior equipment leatherette	/R	1	
(28)	928 613 178 01	rose interior equipment leather	/R	1	
29	928 613 177 00	rose interior equipment leatherette	/L	1	
(29)	928 613 177 01	rose interior equipment leather	/L	1	
30	911 613 119 02	rose		2	
31	928 613 219 00	spring clip		2	
32	928 613 154 01	knob	/R	1	
33	928 613 155 01	knob	/L	1	
-	928 570 425 01	water drain hose		1	
34	928 618 137 00	series resistor		1	
		- -- E N D -- -			

Pos	Part Number	Name	Remarks	Qty	Model

Model	Year	MG	SG	Illustration	Restrictions	Update				
928	91	8	13	813-30		179	15:57	02.09.2004	PORSCHE	PET	PORSCHE

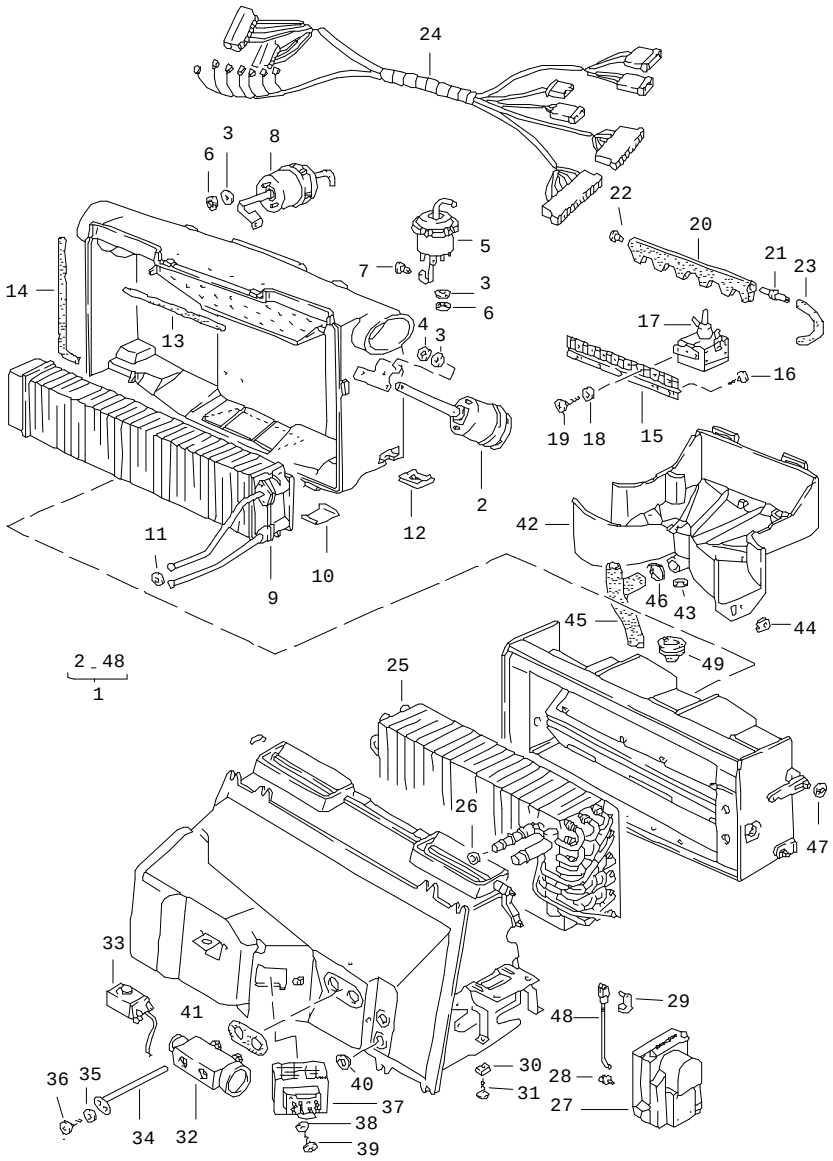

Pos	Part Number	Name	Remarks	Qty	Model
		air conditioner air conditioner			
1	A 928 573 036 06	air conditioner	/LL -88	1	
(1)	A 927 573 036 06	air conditioner	/RL -88	1	
(1)	A 928 573 036 07	air conditioner	/LL -89	1	
(1)	A 927 573 036 08	air conditioner	/RL -89	1	
(1)	928 573 036 08	air conditioner	/LL 90	1	
(1)	927 573 036 08	air conditioner	/RL 90-	1	
(1)	928 573 036 09	air conditioner	/LL 91-	1	
2	928 574 077 02	vacuum unit defroster vent		1	
3	928 574 465 02	rubber washer		9	
4	999 507 243 02	kronen-fix		6	
5	928 574 079 06	vacuum unit footwell		1	
6	999 507 247 02	mecano-speed-fix		6	
7	928 574 735 02	bolt		1	
8	928 573 309 03	vacuum unit centre nozzle		1	
9	928 574 047 02	heat exchanger	/LL	1	
(9)	927 574 047 02	heat exchanger	/RL	1	
10	928 574 423 02	clamp		8	
11	999 701 615 40	o-ring		2	
12	999 591 368 02	speed nut 4,2		2	
-	999 911 214 50	sealing cord		*	
13	-	152 MM		1	
14	-	800 MM		1	
15	928 573 693 04	support		1	

Pos	Part Number	Name	Remarks	Qty	Model
16	999 919 010 02	oval-head sheetmetal screw B 4,2 X 9,5		3	
17	928 573 691 02	solenoid valve	/LL	5	
(17)	928 573 692 02	change-over valve	/RL	5	
18	900 025 001 02	washer A 3,2		5	
19	N 013 932 1	tapping screw B 2,9 X 6,5		5	
20	928 573 695 03	connection		1	
21	928 574 689 02	connecting piece		4	
22	928 574 721 02	plug		2	
23	928 574 717 02	hose		4	
24	928 612 921 04	wiring harness		1	
25	928 573 013 04	evaporator	/LL	1	
(25)	927 573 013 04	evaporator	/RL	1	
26	999 707 251 40	o-ring		1	
(26)	999 707 250 40	o-ring		1	
27	928 624 129 00	control mechanism		1	
28	993 531 563 00	linkage clip		1	
29	999 166 050 02	bolt		1	
30	999 507 037 02	speed nut 4,2		2	
31	900 143 121 07	tapping screw B 4,2 X 16		2	
32	928 573 123 05	expansion valve		1	
33	928 613 133 00	temperature switch		1	
34	928 573 581 02	capillary tube		1	
35	900 028 006 01	washer A 3		1	
36	N 013 953 2	tapping screw B 2,9 X 9,5		1	
37	928 618 101 01	thermo bi-metal switch	-88	1	
37	928 616 101 00	series resistor	89-	1	
38	N 012 224 3	spring washer A 4		2	
39	900 146 025 02	screw M 4 X 18		2	
40	928 574 383 02	grommet		2	
41	928 573 383 03	grommet		1	
42	928 574 027 02	housing	-89	1	
(42)	928 574 027 03	housing	90-	1	
43	999 507 244 02	kronen-fix		1	
44	999 507 020 02	speed nut 4,2		1	
45	928 574 583 04	water drain hose		1	
-	928 423 523 00	spacer sleeve		1	
46	999 513 001 40	tie-wrap		1	
47	999 591 425 03	mecano-speed-fix		1	
-	928 573 299 02	plastic foam strip 9,5 X 211		2	
48	928 573 313 02	gear shift rod		1	
49	928 573 531 02	grommet		1	
		- -- E N D -- -			

Model	Year	MG	SG	Illustration	Restrictions	Update		
928	91	8	98	REP		179	16:21	02.09.2004

Pos	Part Number	Name	Remarks	Qty	Model
		repair kits			
>>	> 928 799 537 13	set of locks	-89	1	
>>	> 928 799 537 15	set of locks	-89	1	M 533
		comprising:			
		steering outer tube		1	
		with			
		steering lock			
		door lock cylinder		2	
		lid lock		1	
		upper part			
		fuel tank cap		1	
		with lock cylinder			
		glove compartment lock		1	
		with lock cylinder			
		key		3	
		when required order also:			
		key lamp			
		see group			
		8/04/05 POS.59			
>>	> 928 537 902 00	set of locks	90-	1	
		comprising:			
		lock cylinder		1	
		for			
		steering lock			
		door lock cylinder		2	
		lid lock		1	
		upper part			
		fuel tank cap		1	
		with lock cylinder			
		glove compartment lock		1	
		with lock cylinder			
		key		3	
>>	> 928 537 902 01	set of locks	91	1	M 562
		comprising:			
		lock cylinder		1	
		for			
		steering lock			
		door lock cylinder		2	
		lid lock		1	
		upper part			
		fuel tank cap		1	
		with lock cylinder			
		glove compartment lock		1	
		with lock cylinder			
		key		3	
>>	> 928 559 075 02	stone guard film	/L	1	
		1 set			
>>	> 928 559 076 02	stone guard film	/R	1	
		1 set			
		- -- E N D -- -			

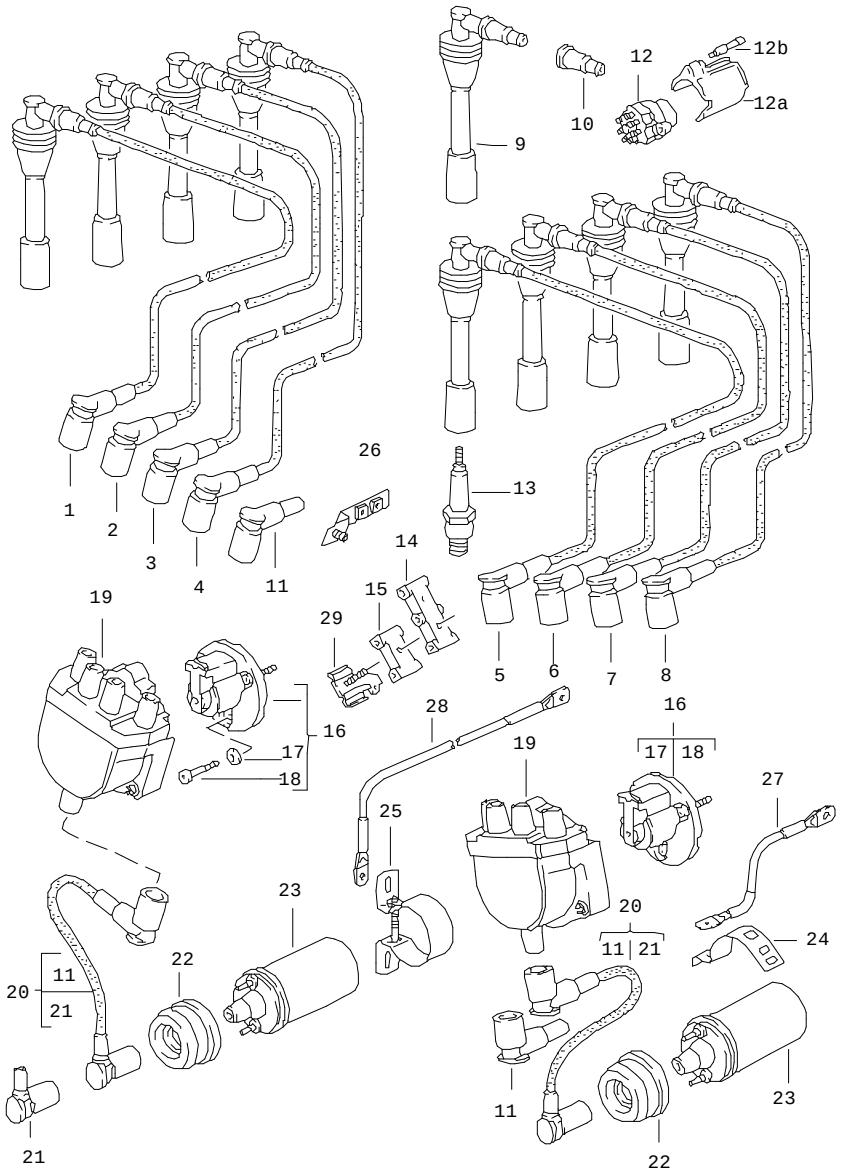

Pos	Part Number	Name	Remarks	Qty	Model
		engine electric. equipment			
1	928 602 060 19	ignition lead cylinder 1		1	
2	928 602 060 20	ignition lead cylinder 2		1	
3	928 602 060 21	ignition lead cyl. 3		1	
4	928 602 060 22	ignition lead cyl. 4		1	
5	928 602 060 23	ignition lead cylinder 5		1	
6	928 602 060 24	ignition lead cyl. 6		1	
7	928 602 060 25	ignition lead cyl. 7		1	
8	928 602 060 26	ignition lead cyl. 8		1	
9	928 602 311 00	spark plug socket		8	
10	999 659 001 40	protective cap		8	
11	928 602 557 00	suppressor cap		8	
(11)	944 602 557 00	distributor plug cylinder 1 and cylinder 5		2	
12	964 613 012 00	ignition starter switch		1	
-	928 613 223 00	retainer spring for ignition starter switch	-89	1	
12A	928 612 088 02	cap	90-	1	
12B	928 612 883 00	bolt	90-	1	
13	999 170 156 90	spark plug WR 7DC		8	M28.41/42 M28.47
14	928 602 323 00	support		5	
15	928 602 322 00	cable holder		9	

Pos	Part Number	Name	Remarks	Qty	Model
(16)	928 602 213 00	rotor		2	
17	N 012 005 3	lock ring		6	
18	928 602 223 00	screw		6	
19	928 602 211 01	distributor cap		2	
20	928 602 039 00	ignition lead	-88	2	
21	928 602 131 00	ignition coil plug	-88	2	
22	927 602 801 00	protection cap	-88	2	
23	944 602 115 00	ignition coil	-88	2	
20	928 602 039 00	ignition lead	89	2	
21	928 602 131 00	ignition coil plug	89	2	
22	927 602 801 00	protection cap	89	2	
23	944 602 115 00	ignition coil	89	2	
(20)	928 602 040 00	ignition lead	89	2	M 298/299
(21)	928 602 557 00	suppressor cap	89	2	M 298/299
(22)	927 602 801 00	protection cap	89	2	M 298/299
(23)	928 602 116 00	ignition coil	89	1	M 298/299
(20)	928 602 040 01	ignition lead	/L 90-	1	
(20)	928 602 040 00	ignition lead	/R 90-	2	
(21)	928 602 557 00	suppressor cap	90-	2	
(22)	927 602 801 00	protection cap	90-	2	
(23)	928 602 116 00	ignition coil	90-	2	
24	928 602 511 00	clamping bow		1	
25	944 602 117 00	clamp		1	
26	928 602 067 00	support		1	
27	928 612 819 00	ground cable	/L	1	
28	928 612 814 00	ground cable	/R	1	
29	928 602 041 00	support	/L	2	
(29)	928 602 042 00	support	/R	2	
		- -- E N D -- -			

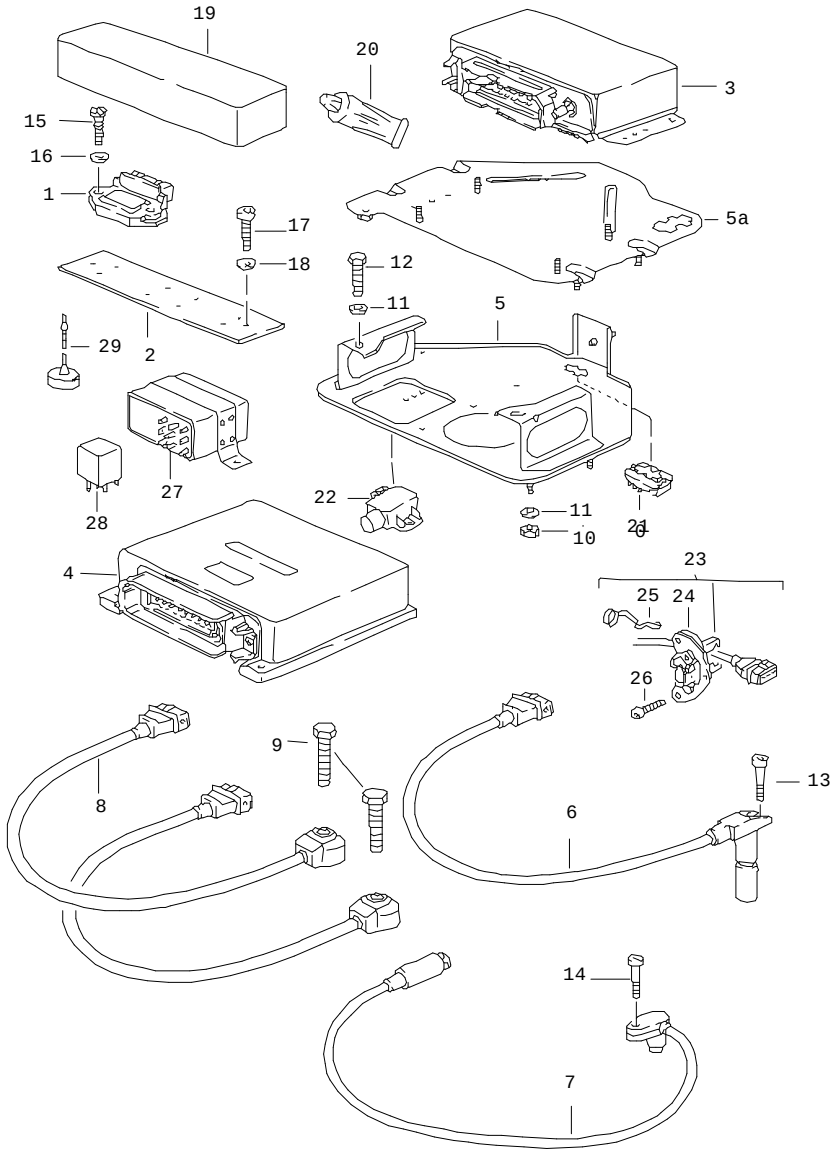

Pos	Part Number	Name	Remarks	Qty	Model
		engine electric. equipment lh-jetronic			
1	928 602 706 01	ignition switch unit		2	
2	928 602 716 00	heat dissipator		1	
3	928 618 124 11	ignition control unit see q-information GR.2 NR.3/86	87	1	
(3) A	928 618 124 12	ignition control unit	88	1	
(3) A	928 618 124 15	ignition control unit	88	1	
(3)	928 618 124 15	ignition control unit	88-	1	
(3)	928 618 124 16	ignition control unit	88	1	M 637
(3)	928 618 124 16	ignition control unit	89	1	M 637
(3)	928 618 124 22	ignition control unit	89	1	M 639
(3)	928 618 124 22	ignition control unit	90-	1	M 481
(3)	928 618 124 15	ignition control unit	90-	1	M 249
-	911 612 422 00	adapter plug for cars without catalytic converter		1	
-	928 618 951 00	retaining clip	87	1	
(4)	928 618 123 13	control unit lh-jetronic		1	
(4)	928 618 123 13	control unit lh-jetronic	88	1	
(4)	928 618 123 12	control unit	88	1	M 637
(4) >	928 618 123 13	control unit lh-jetronic	89 90	1	
(4) >	928 618 123 14	control unit lh-jetronic	89 90	1	M 637/639
(4) >	928 618 123 25	control unit lh-jetronic	91	1	M 249
(4) >	928 618 123 26	control unit lh-jetronic	91	1	M 481
5	928 618 010 01	bracket	-88	1	

Pos	Part Number	Name	Remarks	Qty	Model
(5)	928 618 010 02	bracket	89	1	
(5)	928 618 010 02	bracket	/RL 90-	1	
(5)	928 618 231 01	bracket	/LL 90-	1	
5A	928 618 130 01	bracket	/LL 90-	1	
-	928 618 411 00	grommet		1	
6	944 606 115 00	pulse sender		1	
7	911 606 108 00	timing mark sender	-88	1	
8	911 606 141 00	knock sensor	-90	2	
(8)	928 606 144 00	knock sensor	91-	2	
9	999 217 082 02	hexagon-head bolt M 8 X 30		2	
10	N 011 005 14	hexagon nut M 5		5	
11	900 025 003 02	washer A 5,3		4	
12	N 010 205 6	hexagon-head bolt M 5 X 10		4	
13	999 218 005 02	pan-head screw M 6 X 16		1	
14	900 067 089 02	pan-head screw M 6 X 25	-88	1	
15	900 075 260 02	hexagon-head bolt M 6 X 15		4	
16	N 011 524 7	washer A 6,4		4	
17	900 075 260 02	hexagon-head bolt M 6 X 15		2	
18	N 011 524 7	washer A 6,4		2	
19	928 602 707 00	cover		1	
20	999 915 031 00	sealing compound CURIL K 2 1 tube 100 g		X	

Pos	Part Number	Name	Remarks	Qty	Model
21	928 607 431 00	coding plug	-88	1	M 481
(21)	928 607 432 00	coding plug	-88	1	M 249
(21)	928 607 435 00	coding plug	-88	1	M 481 (AUS)
(21)	928 607 436 00	coding plug	-88	1	M 249 (AUS)
(21)	928 607 431 00	coding plug	89-	1	M 481
(21)	928 607 432 00	coding plug	89-	1	M 249
(21)	928 607 438 00	coding plug	89-	1	M 481/298
(21)	928 607 439 00	coding plug	89-	1	M 249/299
(21)	928 607 440 00	coding plug	89	1	M 481/298 (AUS)
(21)	928 607 441 00	coding plug	89	1	M 249/299 (AUS)
22	928 606 303 00	potentiometer for cars without catalytic converter		1	
23	944 606 170 01	hall sender cyl. 1 - 4		1	
24	928 606 180 01	cap		1	
25	928 606 282 00	tensioning spring		1	
26	900 067 255 02	pan-head screw M 5 X 12		2	
27	928 618 175 00	relay ignition circuit monitor.	89-	1	M 298/299
27	928 618 175 00	relay ignition circuit monitor.	89-	1	(J)
28	928 615 175 00	bridge for cars without catalytic converter	89-	1	
29	928 612 273 00	cap for socket	89-	1	
		mounting parts			
		timing mark sender			

Pos	Part Number	Name	Remarks	Qty	Model	Pos	Part Number	Name	Remarks	Qty	Model
-	N 011 524 7	washer A 6,4		1							
-	N 010 212 4	hexagon-head bolt M 6 X 12		1							
-	999 511 142 02	clamp 17 X 15		1							
		sensor									
-	477 971 851	cable clip		1							
-	N 020 904 4	tie-wrap		1							
		- -- E N D -- -									

Model	Year	MG	SG	Illustration	Restrictions	Update	15:57	02.09.2004	PORSCHE	PET	PORSCHE
928	91	9	01	901-05		179					

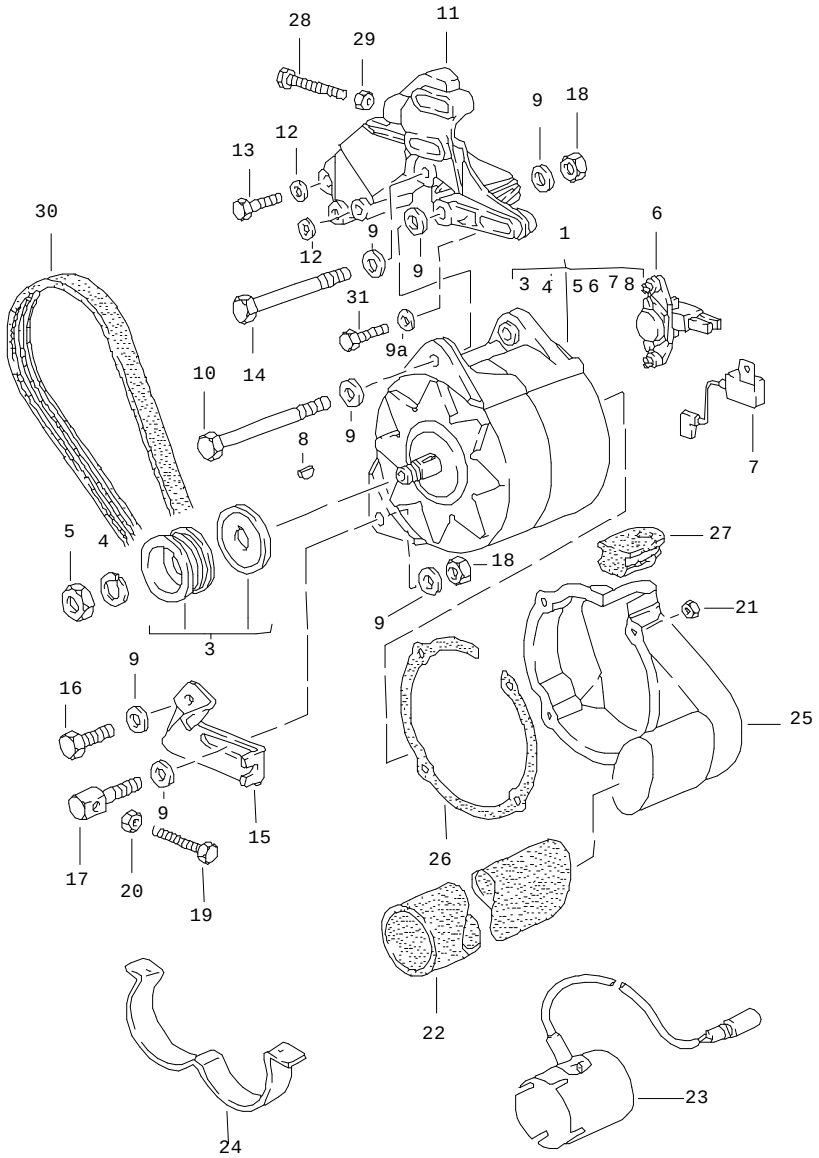

Pos	Part Number	Name	Remarks	Qty	Model
		generator			
1	928 603 011 01	generator	-89	1	
(1)	928 603 049 00	generator	88-	1	M 637
(1)	928 603 011 05	generator	90-	1	
3	928 603 021 01	pulley	-89	1	
(3)	928 603 021 01	pulley 1990 without spacer	90-	1	
4	N 012 016 1	lock ring		1	
(4)	N 011 542 2	washer A 17	88-	1	M 637
5	900 034 013 02	hexagon nut M 16 X 1,5		1	
(5)	N 011 022 1	hexagon nut M 16 X 1,5	88-	1	M 637
6	A 944 603 141 01	regulator		1	
(6)	928 603 142 00	regulator		1	
(6)	928 603 153 00	regulator	88-	1	M 637
7	944 603 143 00	condenser		1	
8	928 603 903 00	woodruff key		1	
9	900 025 008 09	washer A 10,5		7	
9A	928 101 302 00	washer A 8,4		3	
10	900 074 197 02	hexagon-head bolt M 10 X 130		1	
11	928 101 123 02	support		1	
12	900 025 007 02	washer A 8,4		2	
13	N 010 335 5	hexagon-head bolt M 8 X 35		1	

Pos	Part Number	Name	Remarks	Qty	Model
14	900 074 197 02	hexagon-head bolt M 10 X 130		1	
15	928 101 127 00	support		1	
16	900 075 041 09	hexagon-head bolt M 10 X 25		1	
17	928 101 129 00	threaded bolt		1	
18	900 910 031 09	lock nut VM 10		2	
19	N 010 248 1	hexagon-head bolt M 8 X 60		1	
20	900 076 025 02	hexagon nut M 8		1	
21	N 011 005 14	hexagon nut M 5		4	
-	900 025 003 02	washer A 5,3		4	
22	928 603 143 01	flexible pipe 320 MM		1	
(22)	928 603 143 04	flexible pipe 900 MM		1	
23	928 659 021 01	outer sensor for automatic air conditioner		1	
24	928 603 139 00	holder		1	
25	928 603 133 07	ventilation element		1	
(25)	928 603 035 02	ventilation element	88-	1	M 637
26	928 603 135 03	sealing ring		1	
(26)	928 603 135 04	gasket	88-	1	M 637
27	928 612 865 03	hose piece		1	
(27)	U 928 612 865 04	hose piece	88-	1	M 637
(27)	928 612 865 06	hose piece		1	M 637
28	N 010 361 4	hexagon-head bolt M 8 X 65		1	
29	900 076 025 02	hexagon nut M 8		1	
30	999 192 266 50	poly-rib belt K 6 - 858 - LW	-89	1	
(30)	999 192 266 50	poly-rib belt K 6 - 858 - LW	90-	1	M 481
(30)	999 192 347 50	poly-rib belt K 6 - 872 - LW M 81L 51763 >>	90-	1	M 249
31	N 010 353 3	hexagon-head bolt M 8 X 42		3	
		- -- E N D -- -			

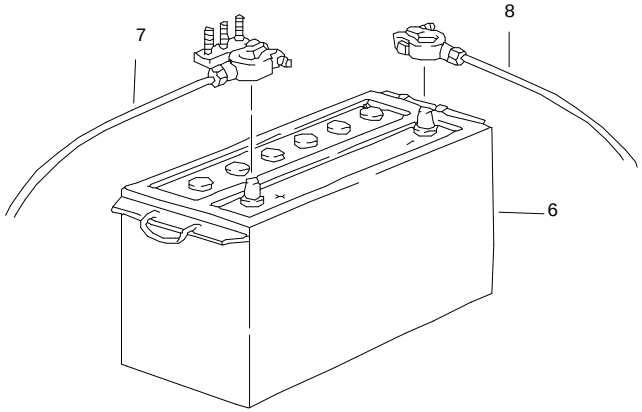

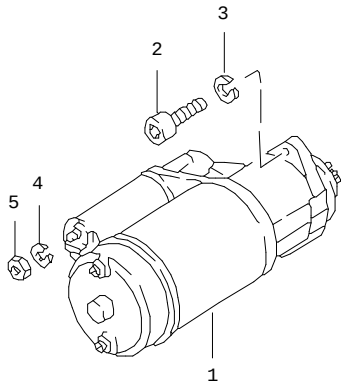

Pos	Part Number	Name	Remarks	Qty	Model
		starter battery			
1	928 604 103 04	starter		1	
2	900 067 124 02	pan-head screw M 10 X 35		2	
3	900 027 016 02	lock ring B 10		2	
4	N 012 009 3	lock ring A 8		1	
5	900 076 025 02	hexagon nut M 8		1	
6	A 928 611 105 01	battery 12V - 72 AH		1	
(6)	928 611 173 02	battery 12V - 72AH		1	
(6)	928 611 175 03	battery 12V - 75AH		1	
(6)	999 611 053 20	battery 12V - 50 AH	88-	1	M 637
7	___ ___ ___ __	see group 9/02/12		.	
8	___ ___ ___ __	see group 9/02/12		.	
-	999 611 104 00	pole covering battery	-89	1	
-	928 611 851 01	pole covering battery	90-	1	
		mounting parts battery			
-	928 611 209 02	clamp		1	
-	900 067 147 02	pan-head screw M 8 X 25		1	
-	N 011 525 13	washer		1	
-	911 611 209 00	bracket	88-	1	M 637

Pos	Part Number	Name	Remarks	Qty	Model	Pos	Part Number	Name	Remarks	Qty	Model
-	N 014 725 2	pan-head screw M 8 X 25	88-	1	M 637						
-	N 011 525 13	washer	88-	2	M 637						
		- -- E N D -- -									

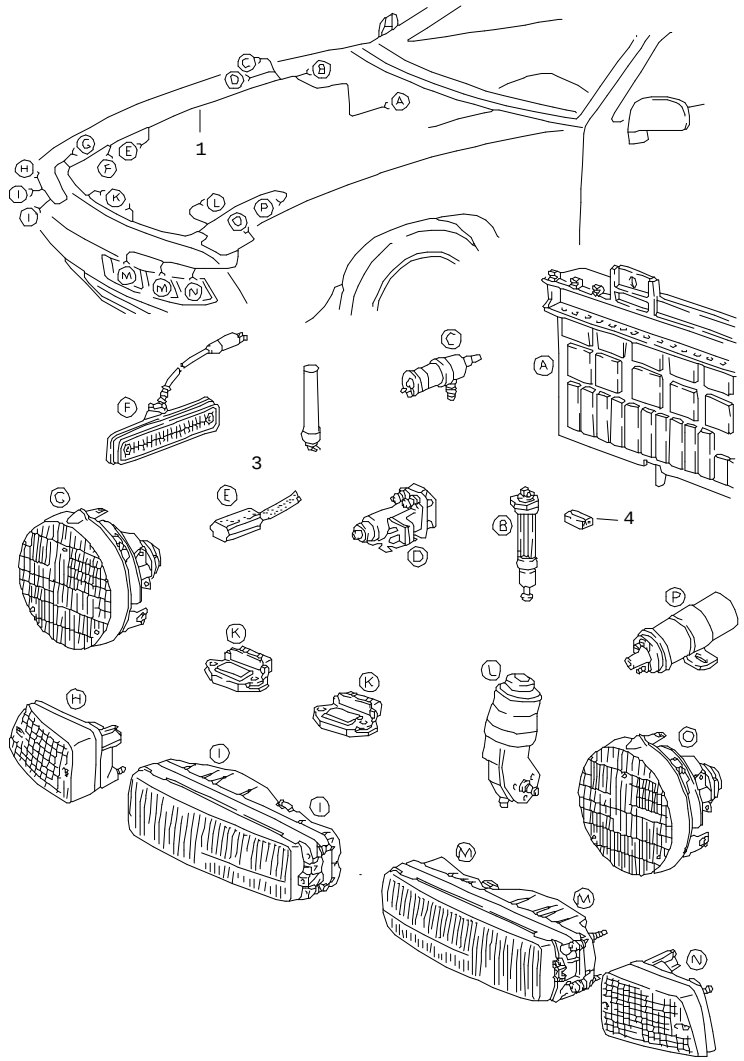

Pos	Part Number	Name	Remarks	Qty	Model
		wiring harness front			
1	928 612 001 22	wiring harness	/LL -88	1	
(1)	928 612 001 26	wiring harness	/LL 89	1	
(1)	928 612 001 30	wiring harness	/LL 90	1	
(1)	928 612 001 34	wiring harness	/LL 91-	1	
1 A	927 612 001 06	wiring harness	/RL -88	1	
(1)	927 612 001 06	wiring harness	/RL -88	1	
(1)	927 612 001 08	wiring harness	/RL 89	1	
(1)	927 612 001 10	wiring harness	/RL 90-	1	
(1)	927 612 001 12	wiring harness	/RL 91-	1	
3	911 612 115 02	connector housing		1	
4	810 971 989	connector housing		1	
		mounting parts			
-	999 511 138 02	clip		1	
-	928 503 113 02	hexagon-head bolt M 6 X 25		1	
-	999 513 023 40	tie-wrap 120 MM		13	
-	999 513 007 40	tie-wrap 88 MM		8	
-	999 513 023 40	tie-wrap 160 MM		2	
		- -- E N D -- -			

Model	Year	MG	SG	Illustration	Restrictions	Update				
928	91	9	02	902-06		179	15:58	02.09.2004	PORSCHE	PET	PORSCHE

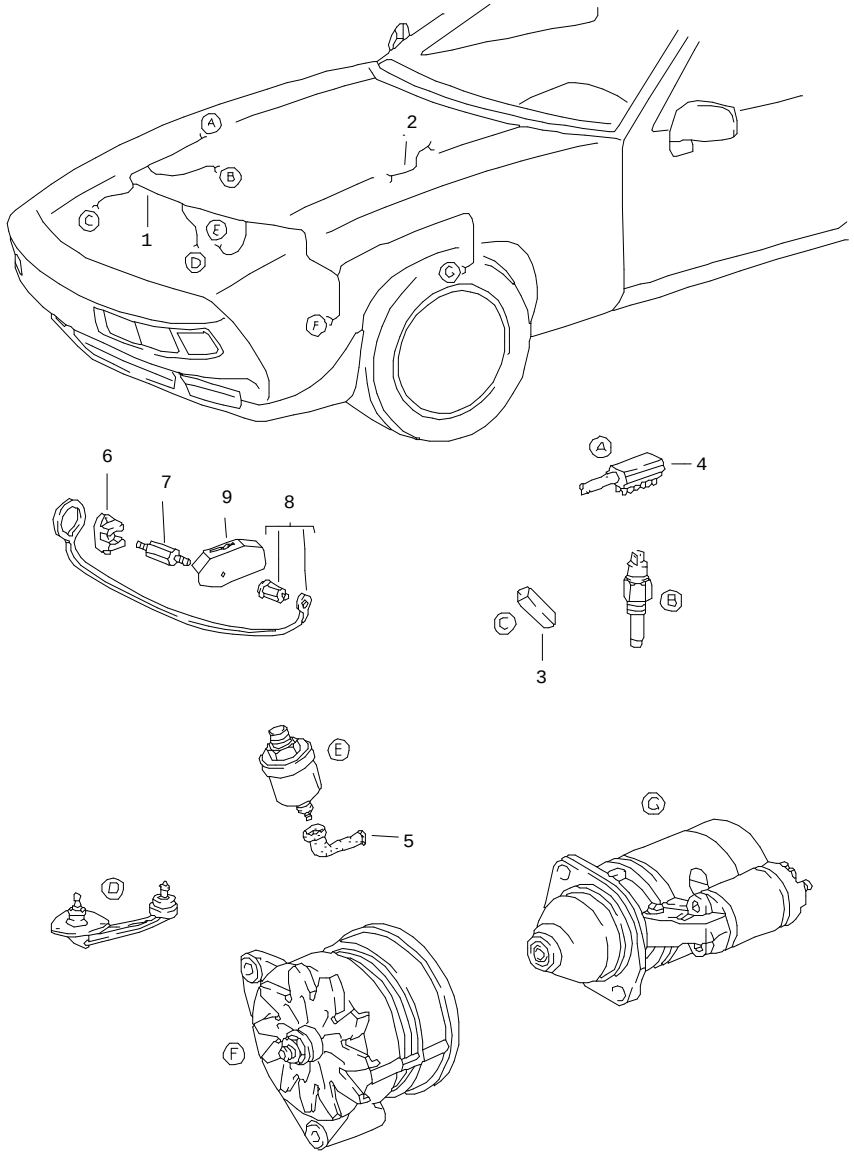

Pos	Part Number	Name	Remarks	Qty	Model
		wiring harness engine			
(1)	928 607 002 14	wiring harness M >> 81H 00957 M >> 81H 07304	87	1	 M28.41 M28.42
(1)	928 607 002 15	wiring harness M 81H 00958 >> M 81H 07305 >>	87	1	 M28.41 M28.42
(1)	928 607 002 15	wiring harness	88	1	
(1)	928 607 002 16	wiring harness	88	1	M 637
1	928 607 002 17	wiring harness	89-	1	
2	928 612 011 00	ground cable		1	
3	111 971 977	plug with guide		1	
4	911 612 113 05	connector housing		1	
5	928 612 497 00	protection cap		2	
6	928 612 867 00	cable connection		1	
7	928 612 868 01	hexagon-head bolt		1	
8	928 612 073 00	protection cap		1	
9	928 612 871 02	cover		1	
		- -- E N D -- -			

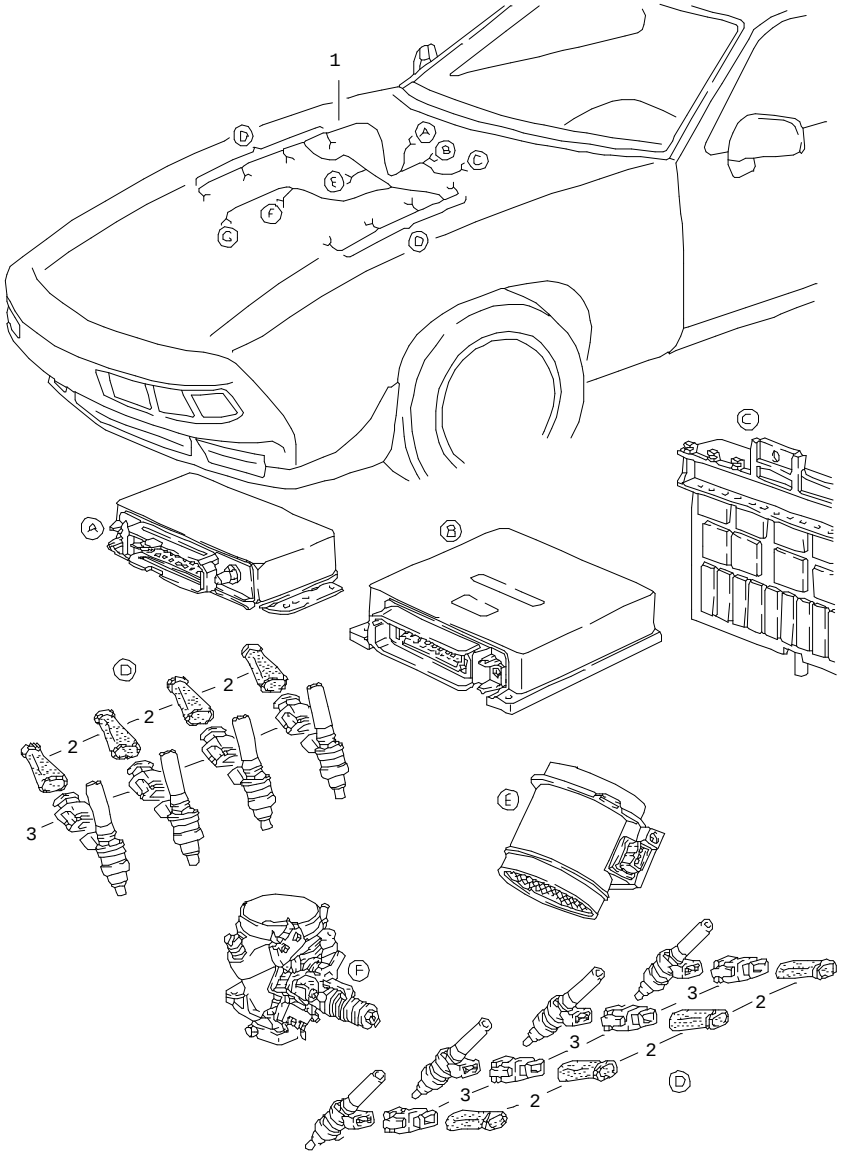

Pos	Part Number	Name	Remarks	Qty	Model
		wiring harness lh-jetronic			
1	928 607 015 04	wiring harness see q-information GR.2 NR.3/86	/LL -88	1	
(1)	928 607 015 08	wiring harness	/LL 89	1	
(1)	928 607 015 09	wiring harness	/LL 90	1	
(1)	928 607 015 11	wiring harness	/LL 91-	1	
(1)	927 607 015 00	wiring harness see q-information GR.2 NR.3/86	/RL -88	1	
(1)	927 607 015 03	wiring harness	/RL 89-	1	
(1)	927 607 015 05	wiring harness	/RL 91-	1	
2	944 612 128 00	protection cap		10	
3	928 612 825 00	connector housing		8	
		mounting parts			
-	N 020 904 4	tie-wrap		X	
-	N 020 626 2	clamp B 15 X 16		2	
-	999 651 159 02	cable clamp		1	
-	999 511 177 02	clamp B 20 X 15	/RL	1	
-	999 511 076 02	clamp B 20 X 18		1	
		- -- E N D -- -			

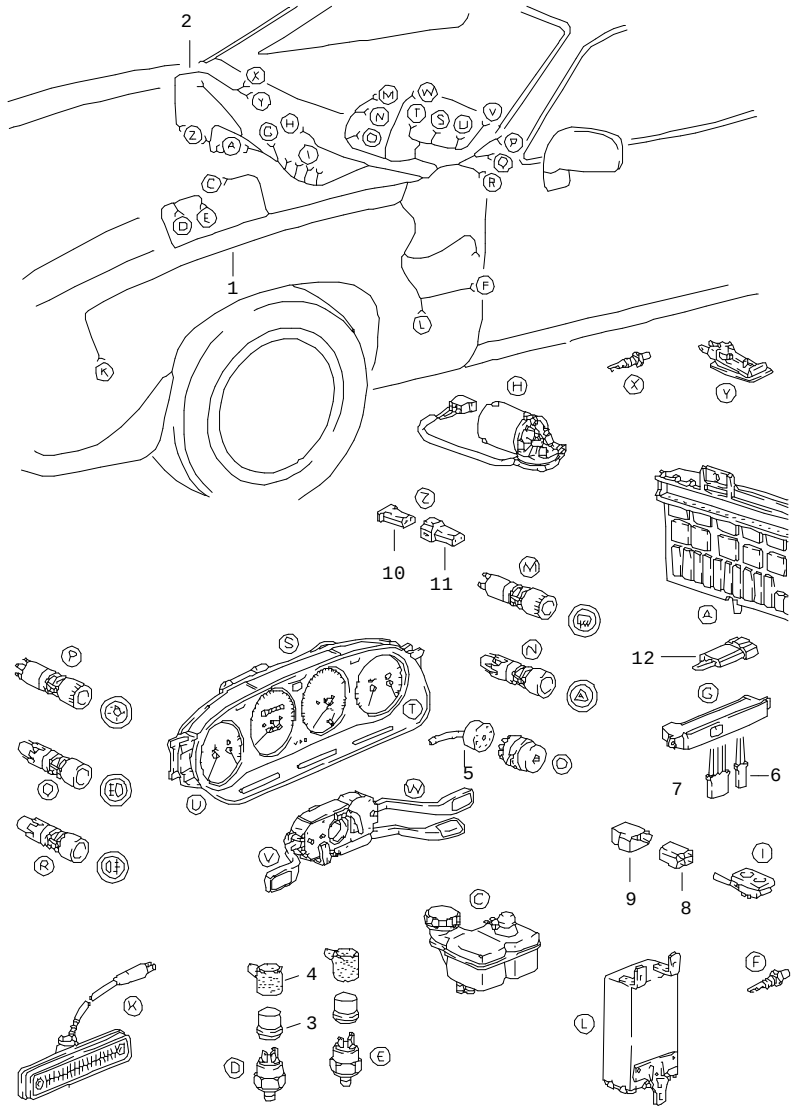

Pos	Part Number	Name	Remarks	Qty	Model
		wiring harness dashboard			
1	A 928 612 003 31	wiring harness	/LL 87	1	
(1)	928 612 003 31	wiring harness	/LL 87	1	
(1)	A 928 612 003 37	wiring harness	/LL 88	1	
(1)	928 612 003 37	wiring harness	/LL 88	1	
(1)	928 612 003 41	wiring harness	/LL 89	1	
(1)	A 928 612 003 51	wiring harness	/LL 90	1	
(1)	928 612 003 51	wiring harness	/LL 90	1	
(1)	A 928 612 003 65	wiring harness	/LL 91	1	
(1)	928 612 003 65	wiring harness	/LL 91-	1	
(1)	A 928 612 003 30	wiring harness	/LL 87	1	M 537
(1)	928 612 003 30	wiring harness	/LL 87	1	M 537
(1)	A 928 612 003 36	wiring harness	/LL 88	1	M 537
(1)	928 612 003 36	wiring harness	/LL 88	1	M 537
(1)	928 612 003 40	wiring harness	/LL 89	1	M 537
(1)	A 928 612 003 50	wiring harness	/LL 90	1	M 537
(1)	928 612 003 50	wiring harness	/LL 90	1	M 537
(1)	A 928 612 003 64	wiring harness	/LL 91	1	M 537
(1)	928 612 003 64	wiring harness	/LL 91-	1	M 537
(1)	A 928 612 003 38	wiring harness	/LL 88	1	M 637
(1)	928 612 003 38	wiring harness	/LL 88-	1	M 637
(1)	A 928 612 003 39	wiring harness	/LL 88	1	M 637
(1)	928 612 003 39	wiring harness	/LL 88-	1	M 637 M 607
1	A 927 612 003 20	wiring harness F >>92HS8 41006	/RL 87	1	
(1)	927 612 003 20	wiring harness F >>92HS8 41006	/RL 87	1	

Pos	Part Number	Name	Remarks	Qty	Model
(1)	927 612 003 22	wiring harness F 92HS8 41007>>	/RL 87	1	
(1)	A 927 612 003 26	wiring harness	/RL 88	1	
(1)	927 612 003 26	wiring harness	/RL 88	1	
(1)	927 612 003 28	wiring harness	/RL 89	1	
(1)	A 927 612 003 37	wiring harness	/RL 90	1	
(1)	927 612 003 37	wiring harness	/RL 90	1	
(1)	A 927 612 003 49	wiring harness	/RL 91	1	
(1)	927 612 003 49	wiring harness	/RL 91-	1	
1	A 927 612 003 19	wiring harness F >>92HS8 40937	/RL 87	1	M 538
(1)	927 612 003 19	wiring harness F >>92HS8 40937	/RL 87	1	M 538
(1)	927 612 003 21	wiring harness F 92HS8 40938>>	/RL 87	1	M 538
(1)	A 927 612 003 25	wiring harness	/RL 88	1	M 538
(1)	927 612 003 25	wiring harness	/RL 88	1	M 538
(1)	927 612 003 29	wiring harness	/RL 89	1	M 538
(1)	A 927 612 003 36	wiring harness	/RL 90	1	M 538
(1)	927 612 003 36	wiring harness	/RL 90	1	M 538
(1)	A 927 612 003 48	wiring harness	/RL 91	1	M 538
(1)	927 612 003 48	wiring harness	/RL 91-	1	M 538
-	A 928 612 043 05	wiring harness	/LL 90	1	
-	928 612 043 05	wiring harness for instrument box	/LL 90-	1	
-	A 927 612 043 02	wiring harness	/RL 90	1	
-	927 612 043 02	wiring harness for instrument box	/RL 90-	1	
2	928 612 038 00	wiring harness glove compartment light	-90	1	
(2)	928 612 038 02	wiring harness glove compartment light	91-	1	
3	113 945 525	terminal sleeve housing		2	
4	211 945 521 C	protection cap		2	
5	911 612 889 00	connector housing		1	
6	171 971 998 A	connector housing		1	
7	171 971 998 C	connector housing		1	
8	928 612 414 04	connector housing		X	
9	928 612 413 00	connector housing blue		X	
(9)	928 612 413 03	connector housing yellow		X	
10	171 971 999 A	terminal sleeve housing		1	
11	171 971 998 A	connector housing		1	
12	928 607 422 00	coding plug	/RL -89	1	
(12)	928 607 421 00	coding plug	/RL -88	1	M 061
(12)	928 607 421 00	coding plug	/RL 89	1	M 061
-	928 612 202 03	wiring harness switch unit - EX -	-88	1	(J)
-	928 612 202 04	wiring harness switch unit - EX -	-89	1	(J)
-	928 612 202 06	wiring harness switch unit - EX -	90-	1	(J)
-	928 612 204 01	single line switch unit - EX -	-88	1	(J)
-	911 617 108 00	diode	-88	1	(J)
		mounting parts			
-	999 513 002 40	tie-wrap 286 MM		1	

Pos	Part Number	Name	Remarks	Qty	Model	Pos	Part Number	Name	Remarks	Qty	Model
-	999 513 023 40	tie-wrap 293 MM		1							
-	999 513 007 40	tie-wrap 80 MM		8							
-	999 651 152 02	cable clamp		1							
-	999 591 380 02	cable clamp		5							
-	477 971 939	cable terminal		5							
-	928 612 091 00	bridge for central electrical system		1							
12A	928 612 088 02	cap	90-	1							
12B	928 612 883 00	bolt	90-	1							
		- -- E N D -- -									

Model	Year	MG	SG	Illustration	Restrictions	Update				
928	91	9	02	902-11		179	15:59	02.09.2004	PORSCHE	PET	PORSCHE

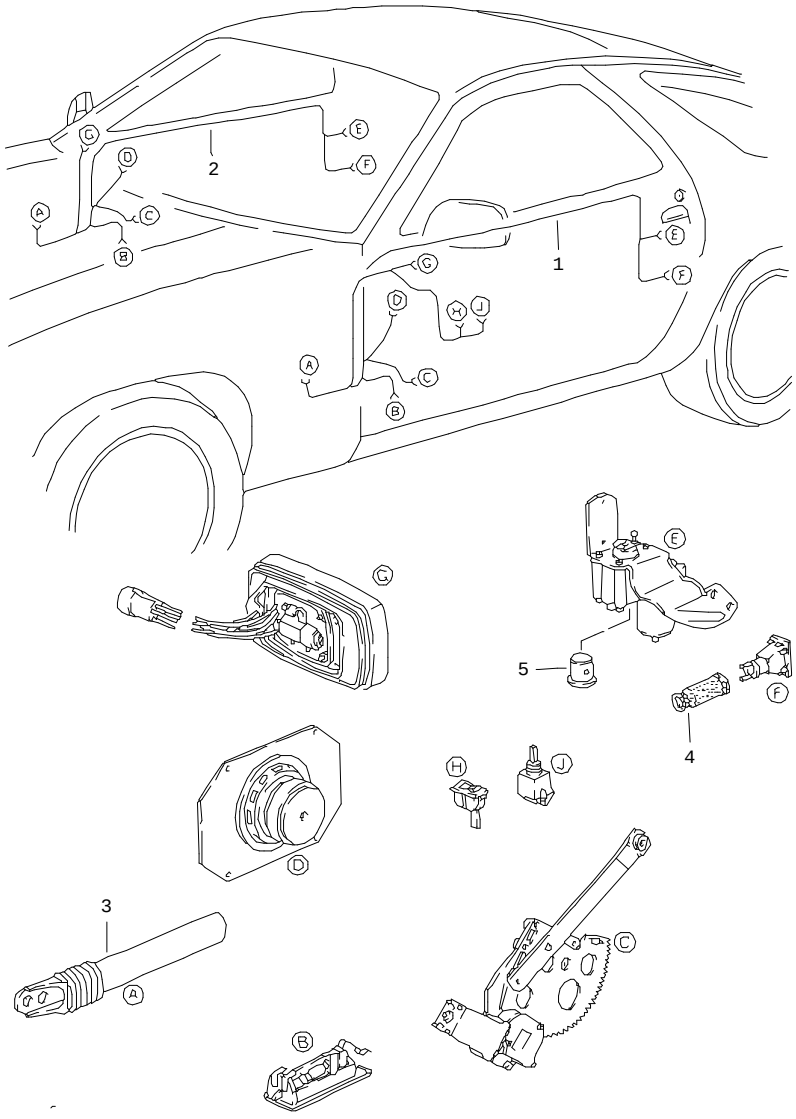

Pos	Part Number	Name	Remarks	Qty	Model
		wiring harness door			
1	928 612 167 05	wiring harness	/LL -88	1	
(1)	928 612 167 11	wiring harness	/LL 89	1	
(1)	928 612 167 17	wiring harness	/LL 90	1	
(1)	928 612 167 21	wiring harness	/LL 91	1	
(1)	928 612 167 07	wiring harness	/LL 88	1	M 637
(1)	927 612 167 02	wiring harness	/RL -88	1	
(1)	927 612 167 06	wiring harness	/RL 89	1	
(1)	928 612 167 17	wiring harness	/RL 90	1	
(1)	928 612 167 22	wiring harness	/RL 91	1	
(1)	928 612 167 03	wiring harness	/LL -88	1	M 537
(1)	928 612 167 09	wiring harness	/LL 89	1	M 537
(1)	928 612 167 15	wiring harness	/LL 90	1	M 537
(1)	928 612 167 19	wiring harness	/LL 91	1	M 537
(1)	927 612 167 00	wiring harness	/RL -88	1	M 538
(1)	927 612 167 04	wiring harness	/RL 89	1	M 538
(1)	928 612 167 15	wiring harness	/RL 90	1	M 538
(1)	928 612 167 20	wiring harness	/RL 91	1	M 538
2	928 612 167 06	wiring harness	/LL -88	1	
(2)	928 612 167 12	wiring harness	/LL 89	1	
(2)	928 612 167 18	wiring harness	/LL 90	1	
(2)	928 612 167 22	wiring harness	/LL 91	1	
(2)	928 612 167 08	wiring harness	/LL 88-	1	M 637
(2)	927 612 167 03	wiring harness	/RL -88	1	
(2)	927 612 167 07	wiring harness	/RL 89	1	
(2)	928 612 167 18	wiring harness	/RL 90	1	
(2)	928 612 167 21	wiring harness	/RL 91	1	

Pos	Part Number	Name	Remarks	Qty	Model	Pos	Part Number	Name	Remarks	Qty	Model
(2)	928 612 167 04	wiring harness	/LL -88	1	M 537						
(2)	928 612 167 10	wiring harness	/LL 89	1	M 537						
(2)	928 612 167 16	wiring harness	/LL 90	1	M 537						
(2)	928 612 167 20	wiring harness	/LL 91	1	M 537						
(2)	927 612 167 01	wiring harness	/RL -88	1	M 538						
(2)	927 612 167 05	wiring harness	/RL 89	1	M 538						
(2)	928 612 167 16	wiring harness	/RL 90	1	M 538						
(2)	928 612 167 19	wiring harness	/RL 91	1	M 538						
3	928 555 551 02	cable guide		2							
4	999 659 002 50	protective cap		2							
5	928 612 131 00	connector housing		2							
		mounting parts									
-	477 971 851	cable clip		4							
-	928 537 411 02	cable clamp GRAU		4							
		- -- E N D -- -									

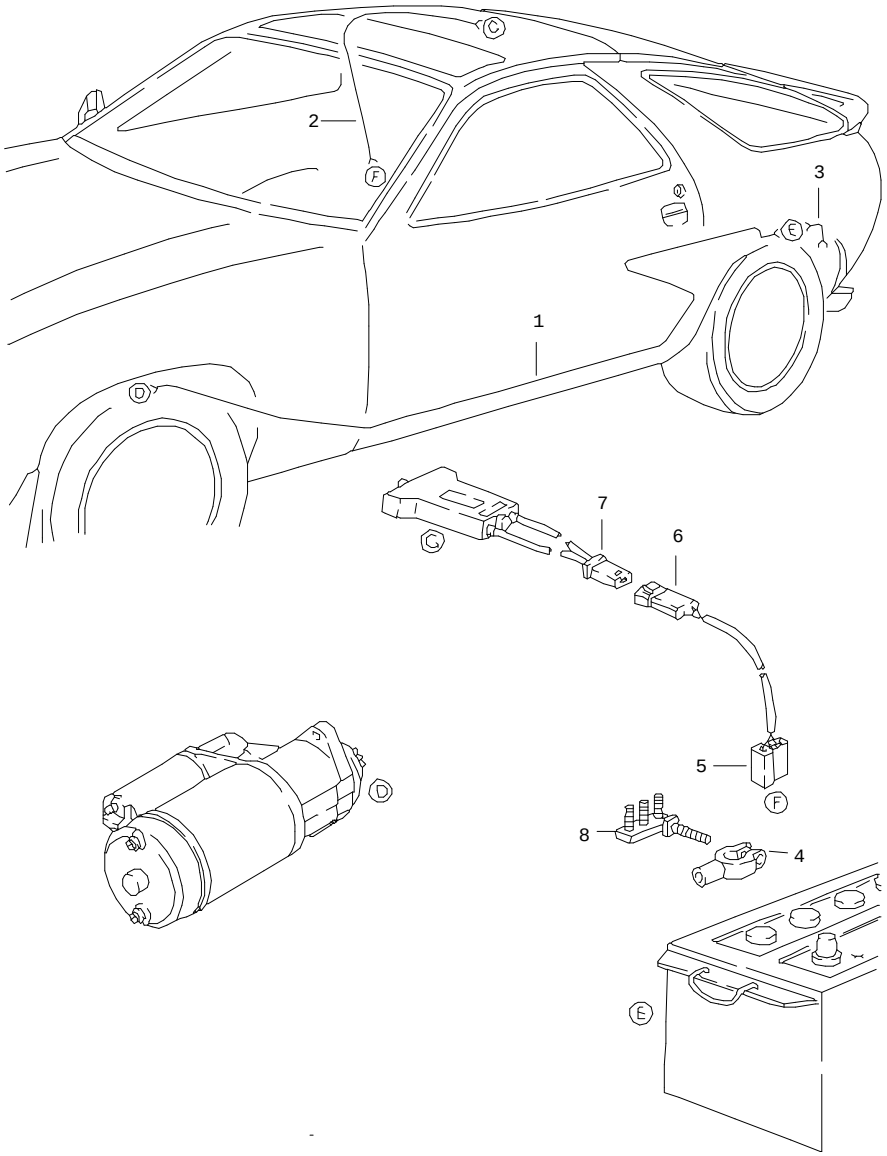

Pos	Part Number	Name	Remarks	Qty	Model
		wiring harness passenger compartment			
1	928 612 007 03	wiring harness starter battery	-89	1	
(1)	928 612 007 04	wiring harness starter battery	90-	1	
2	928 612 006 01	wiring harness sunroof	-89	1	
3	928 612 009 13	ground cable battery body		1	
4	928 611 898 01	terminal clamp	-89	1	
(4)	928 611 898 02	terminal clamp	90-	1	
5	999 652 167 40	terminal sleeve housing		1	
6	171 971 998 A	connector housing		1	
7	171 971 999 A	terminal sleeve housing		1	
8	928 611 850 03	distributing piece	90	1	
(8)	928 611 085 00	distributing piece	91-	1	
		mounting parts			
		battery-starter cable			
-	999 513 003 40	tie-wrap		1	
-	999 511 156 00	clamp 13/15 W 5		13	
-	999 591 839 40	hexagon nut T 5		13	
-	999 702 124 50	grommet		1	
		mounting parts ground cable			
-	900 075 398 02	hexagon-head bolt M 8 X 16 SB		1	
-	N 012 241 8	spring washer B 8		1	

Pos	Part Number	Name	Remarks	Qty	Model	Pos	Part Number	Name	Remarks	Qty	Model
-	900 151 008 02	washer A 8,4		1							
-	999 702 128 50	grommet 8 X 10 X 15		1							
		- -- E N D -- -									

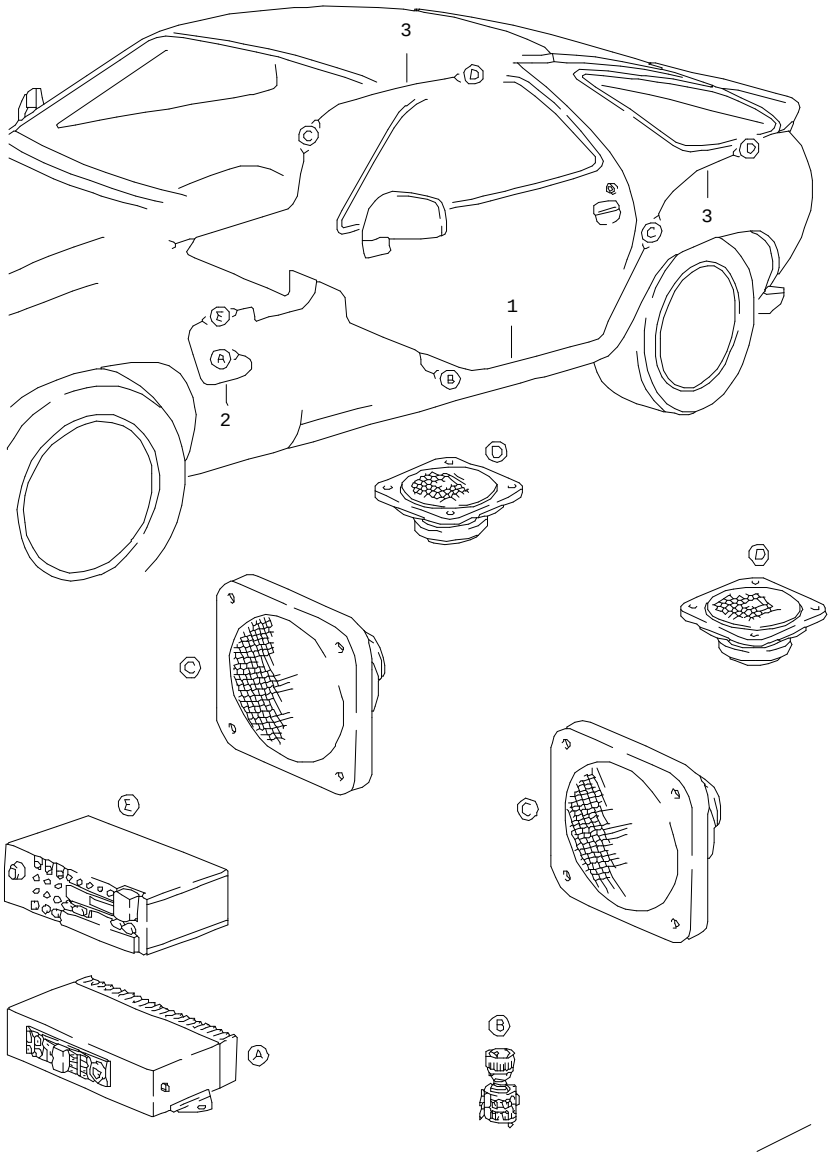

Pos	Part Number	Name	Remarks	Qty	Model
		wiring harness loudspeaker			
		for cars without booster			
1	928 612 066 04	wiring harness	-88	1	
-	928 612 261 00	bridge	-88	1	
		for cars with booster			
(1)	928 612 068 04	wiring harness		1	
2	928 645 406 00	connecting cable	-88	1	M 494
(2)	928 645 172 00	wiring harness	89 90	1	M 680
(2)	928 645 172 00	wiring harness	91-	1	
3	928 612 069 01	wiring harness	-88	2	M 490
(3)	928 612 069 02	wiring harness	89 90	2	M 680
(3)	928 612 069 02	wiring harness	91-	2	
-	928 612 261 00	bridge	91-	2	

- -- E N D -- -

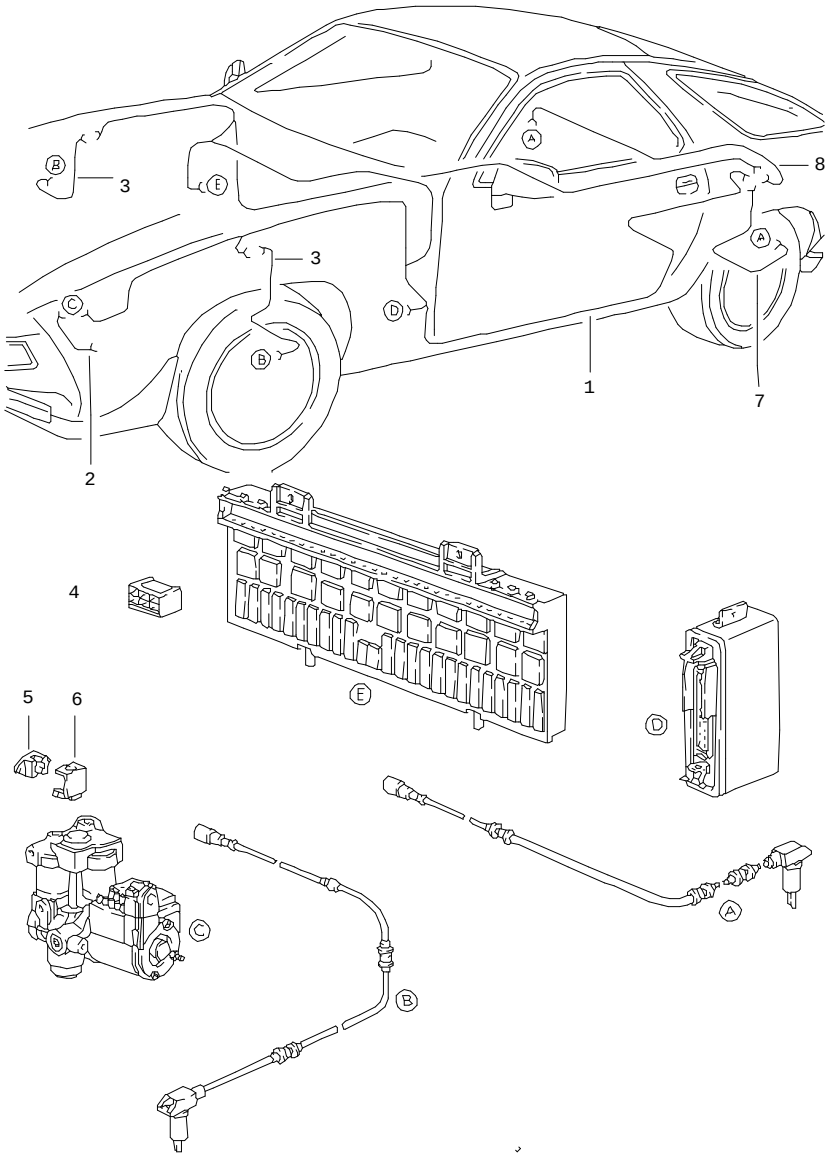

Pos	Part Number	Name	Remarks	Qty	Model
		wiring harness anti-lock brake system			
1	928 612 121 05	wiring harness	/LL -88	1	
(1)	928 612 121 06	wiring harness	/LL 89	1	
(1)	928 612 121 07	wiring harness	/LL 89	1	M 482
(1)	928 612 121 19	wiring harness	90	1	
(1)	928 612 121 21	wiring harness	91-	1	
(1)	927 612 121 04	wiring harness	/RL -88	1	
(1)	927 612 121 05	wiring harness	/RL 89	1	
(1)	927 612 121 06	wiring harness	/RL 89	1	M 482
(1)	927 612 121 18	wiring harness	/RL 90	1	
(1)	927 612 121 20	wiring harness	/RL 91-	1	
2	928 612 189 01	ground strap		1	
3	928 612 403 00	wiring harness	-88	2	
(3)	928 612 404 00	wiring harness	89-	2	M 482
4	161 971 975 A	connector housing		1	
5	928 612 867 00	cable connection		1	
6	928 612 874 00	cap		1	
7	928 612 405 00	wiring harness	/L -88	1	
(7)	928 612 420 00	wiring harness	/L 89-	1	M 482
8	928 612 406 00	wiring harness	/R -88	1	
(8)	928 612 430 00	wiring harness	/R 89-	1	M 482
		- -- E N D -- -			

Model	Year	MG	SG	Illustration	Restrictions	Update				
928	91	9	02	902-20		179	15:59	02.09.2004	PORSCHE	PET	PORSCHE

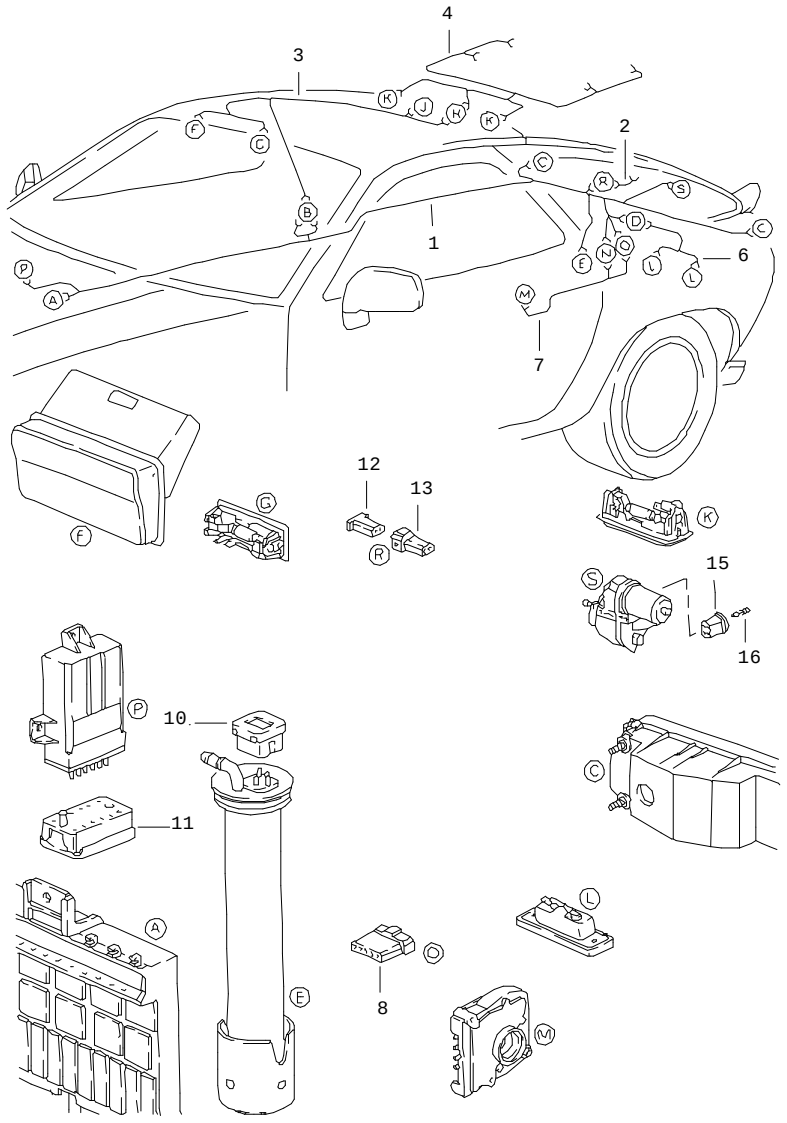

Pos	Part Number	Name	Remarks	Qty	Model
		wiring harness rear end			
1	928 612 004 33	wiring harness	/LL -88	1	M 481
(1)	928 612 004 37	wiring harness	88	1	M 637
(1)	928 612 004 39	wiring harness	/LL 89	1	M 481
(1)	928 612 004 49	wiring harness	/LL 90	1	M 481
(1)	928 612 004 57	wiring harness	/LL 91-	1	M 481
(1)	928 612 004 34	wiring harness	/LL -88	1	M 249
(1)	928 612 004 40	wiring harness	/LL 89	1	M 249
(1)	928 612 004 50	wiring harness	/LL 90	1	M 249
(1)	928 612 004 58	wiring harness	/LL 91-	1	M 249
(1)	927 612 004 20	wiring harness	/RL -88	1	M 481
(1)	927 612 004 22	wiring harness	/RL 89	1	M 481
(1)	927 612 004 28	wiring harness	/RL 90	1	M 481
(1)	927 612 004 32	wiring harness	/RL 91-	1	M 481
(1)	927 612 004 21	wiring harness	/RL -88	1	M 249
(1)	927 612 004 23	wiring harness	/RL 89	1	M 249
(1)	927 612 004 29	wiring harness	/RL 90	1	M 249
(1)	927 612 004 33	wiring harness	/RL 91-	1	M 249
-	N 100 641 01	safety fuse T 1,0 B rear lid unlocking device		1	
-	928 612 479 00	fuse holder rear lid unlocking device		1	
2	928 612 037 01	wiring harness		1	
3	928 612 008 07	wiring harness	-89	1	
(3)	928 612 008 09	wiring harness	90-	1	
(4)	928 612 005 03	wiring harness		1	
(4)	928 612 005 04	wiring harness	89-	1	M 602

Pos	Part Number	Name	Remarks	Qty	Model
6	928 612 039 01	wiring harness	-88	1	
(6)	928 612 039 02	wiring harness	89-	1	
7	928 612 012 07	wiring harness	-90	1	M 249
(7)	928 612 012 08	wiring harness	91-	1	M 249
7	928 612 016 02	wiring harness back-up light G >> 11H 05467	87	1	M 481 G28.12
(7)	928 612 016 03	wiring harness back-up light G 11H 05468 >>	87-	1	M 481 G28.12
(7)	928 612 016 03	wiring harness	89 90	1	
(7)	928 612 016 04	wiring harness	91-	1	
-	928 612 072 00	wiring harness for fuel pump	-88	1	M 460
-	928 612 072 00	wiring harness for fuel pump	89	1	
8	171 971 998 E	connector housing 6-pole		1	
9	171 971 998 C	connector housing 4-pole		1	
10	901 612 891 01	connector housing triple		1	
11	944 612 215 00	connector housing 14-pole		1	
12	171 971 999 A	terminal sleeve housing 2-pole		1	
13	171 971 998 A	connector housing 2-pole		1	
14	803 971 979	plug socket		2	
15	928 612 131 00	connector housing		1	
16	999 652 269 12	contact spring		4	
		mounting parts			

Pos	Part Number	Name	Remarks	Qty	Model
		transmission			
-	999 651 160 02	cable holder		2	
-	928 612 493 00	cable holder		1	M 249
-	999 651 168 40	cable holder		1	M 249
-	113 941 189	grommet pulse sender		1	
-	999 651 158 02	cable holder pulse sender		1	
		wheel housing			
-	999 513 021 40	tie-wrap		1	
		rear lid			
-	477 971 939	cable terminal		5	
-	999 591 380 02	cable clamp		5	
		- -- E N D -- -			

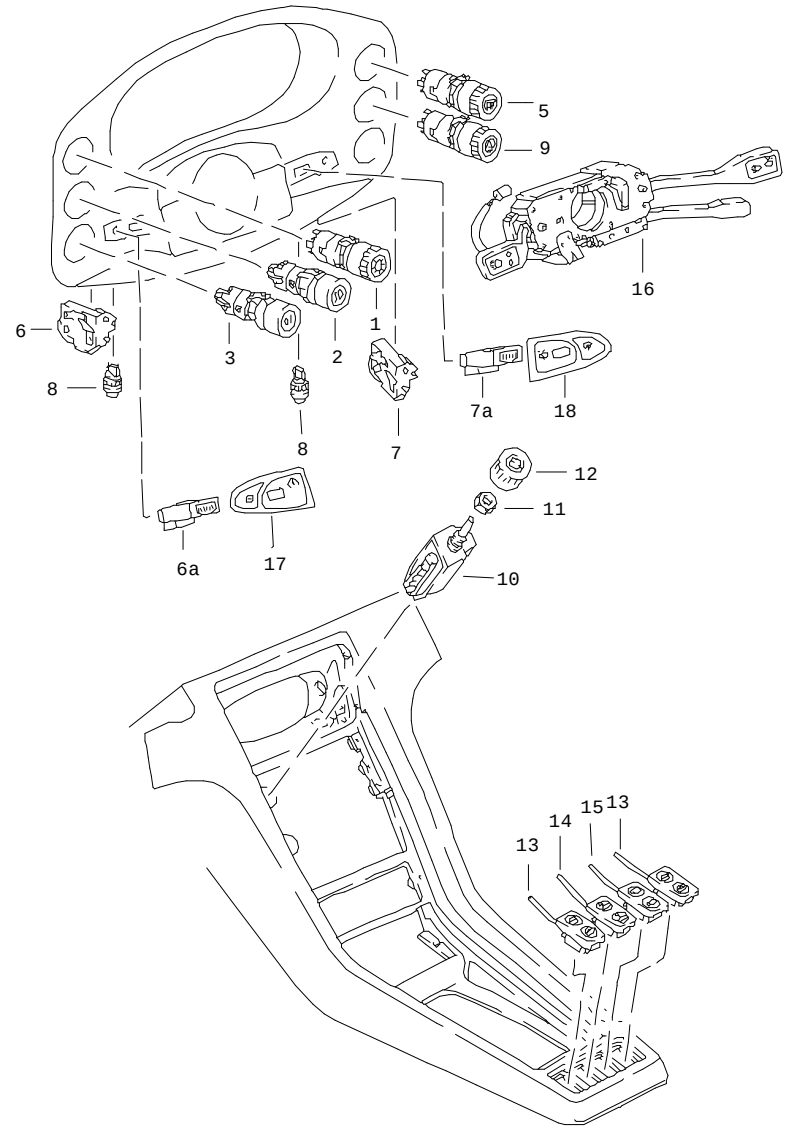

Pos	Part Number	Name	Remarks	Qty	Model
		switch manual			
1	928 613 103 00	combined switch for light		1	
2	928 613 111 00	switch for fog headlamp		1	
3	928 613 109 00	switch for fog tail lamp		1	
(3)	928 613 130 00	push-button	89	1	(J)
	70B	black for intensive windscr. washer			
5	928 613 107 01	combined switch for rear window heating		1	
6	928 613 121 01	potentiometer	-88	1	
6A	928 613 031 00	potentiometer	90-	1	
	70B	black			
7	928 613 122 00	potentiometer interval relay	-89	1	
7A	928 613 015 00	potentiometer	90-	1	
	70B	black interval relay			
8	928 613 124 00	push-button tripmeter	-88	1	
(8)	928 613 124 00	push-button for intensive windscr. washer	-89	1	
9	928 613 105 01	hazard warning light sw.		1	
10	928 613 127 00	blower switch		1	
11	999 034 007 02	hexagon flat nut M 12 X 1		1	
12	928 613 731 01	rotary knob blower switch		1	

Pos	Part Number	Name	Remarks	Qty	Model
-	999 591 434 02	spring blower switch		1	
13	928 613 123 05	tip switch for window opener	-89	2	
(13)	928 613 123 07	tip switch	90-	2	
	01C	black for window opener			
(14)	928 613 120 00	tip switch	-89	1	M 650
(14)	928 613 120 02	tip switch	90-	1	M 650
	01C	black			
15	928 613 129 03	tip switch for rear window wiper	-89	1	
(15)	928 613 129 04	tip switch	90-	1	
	70B	black for rear window wiper			
(15)	928 613 123 04	display specimen		1	
	70B	black			
		switch door mirror see group 8/09/10			
16	928 613 101 03	steering column switch with headlight washer system without cruise control	-88	1	
(16)	928 613 101 05	steering column switch with headlight washer system with cruise control	-88	1	
(16)	928 613 101 06	steering column switch with headlight washer system with cruise control lettering english	-88	1	
(16)	928 613 101 07	steering column switch with headlight washer system with cruise control	-88	1	(F)
(16)	928 613 333 00	steering column switch	89	1	
	01C	black with headlight washer system without cruise control			
(16)	928 613 330 00	steering column switch	89	1	
	01C	black with headlight washer system with cruise control			
(16)	928 613 331 00	steering column switch	89	1	
	01C	black with headlight washer system with cruise control lettering english			
(16)	928 613 332 00	steering column switch	89	1	(F)
	01C	black with headlight washer system with cruise control			
(16)	964 613 337 00	steering column switch	90-	1	

Pos	Part Number	Name	Remarks	Qty	Model
	01C	black with headlight washer system without cruise control			
(16)	964 613 331 00	steering column switch	90-	1	
	01C	black with headlight washer system with cruise control			
(16)	964 613 333 00	steering column switch	90-	1	(F)
	01C	black with headlight washer system with cruise control			
(16)	964 613 332 00	steering column switch	90-	1	
	01C	black with headlight washer system with cruise control lettering english			
-	964 652 104 00	plate	90-	1	
17	928 613 341 00	switch	90-	1	
	70B	black			
18	928 613 342 00	switch	90-	1	
	70B	black intensive windscr. washer			
-	999 651 165 02	cable clamp		1	
		- -- E N D -- -			

Model	Year	MG	SG	Illustration	Restrictions	Update				
928	91	9	03	903-05		179	16:00	02.09.2004	PORSCHE	PET	PORSCHE

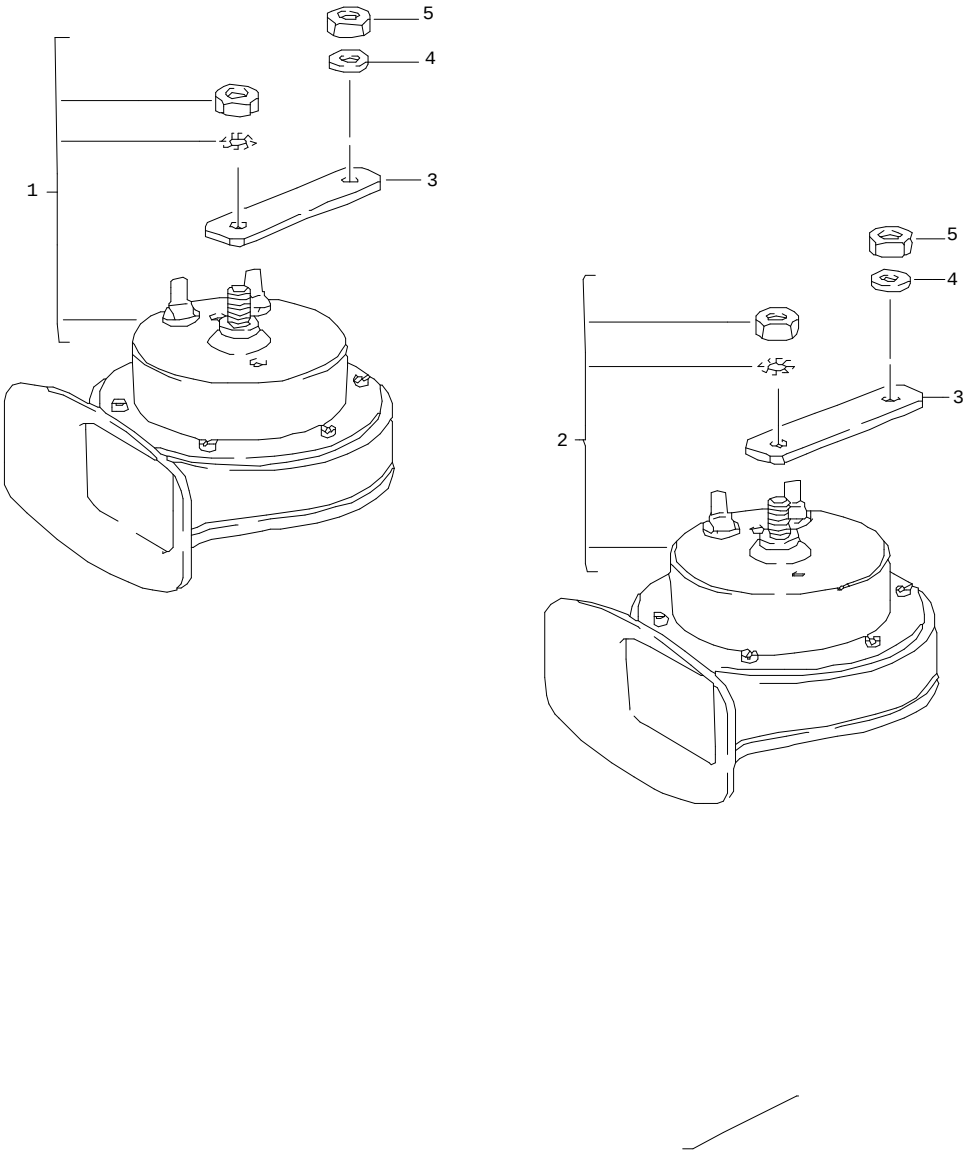

Pos	Part Number	Name	Remarks	Qty	Model
		fanfare			
1	928 635 221 00	fanfare high-pitched	-89	1	
1	171 951 223	fanfare high-pitched	90-	1	
1	928 635 221 00	fanfare high-pitched	91-	1	
2	928 635 222 00	fanfare low-pitched	-89	1	
2	171 951 221	fanfare low-pitched	90-	1	
2	928 635 222 00	fanfare low-pitched	91-	1	
3	944 635 411 00	support	-89	2	
3	928 635 112 00	support	90-	2	
4	900 025 007 02	washer A 8		2	
5	900 910 003 02	lock nut VM 8		2	

- -- E N D -- -

Model	Year	MG	SG	Illustration	Restrictions	Update				
928	91	9	03	903-10		179	16:00	02.09.2004	PORSCHE	PET	PORSCHE

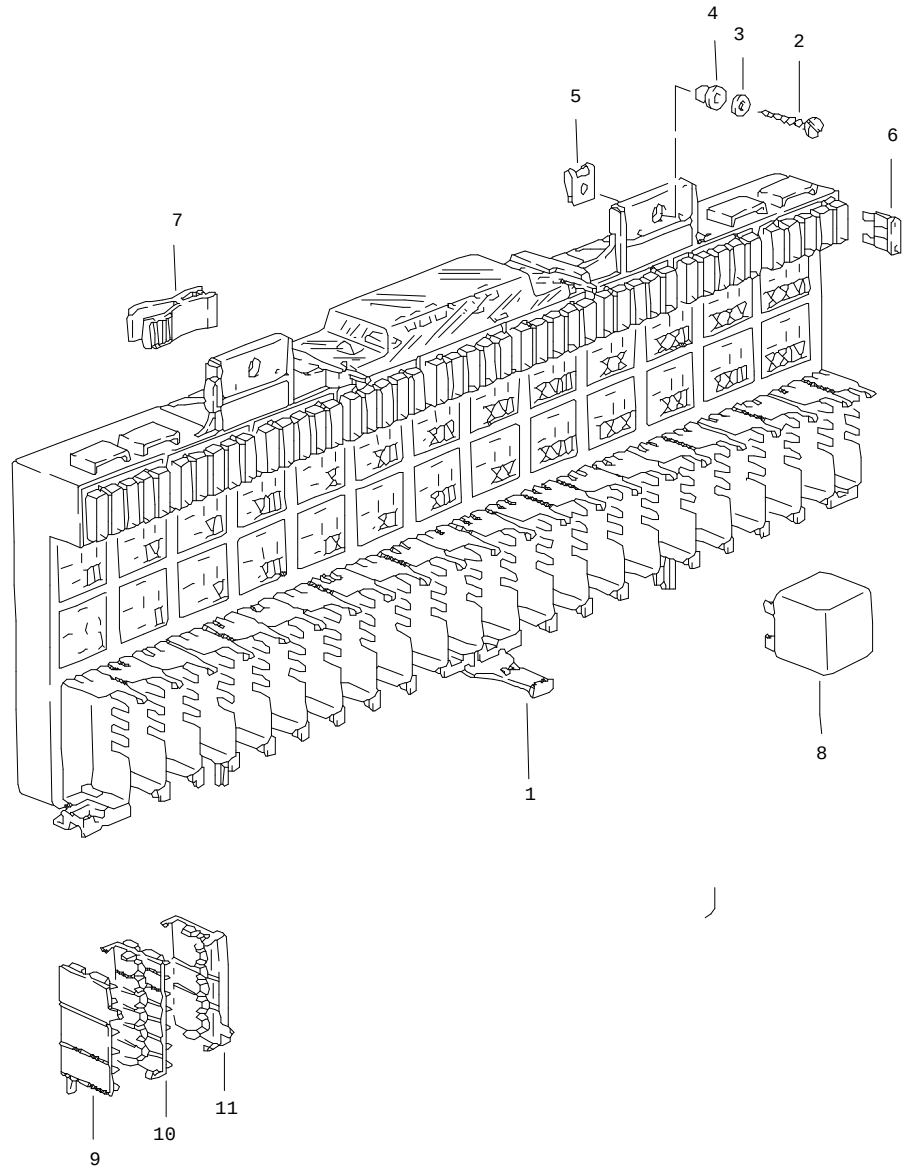

Pos	Part Number	Name	Remarks	Qty	Model
		central electrical system relay fuse			
1	A 928 610 105 16	plate		1	
(1)	928 610 105 16	plate	-88	1	
(1)	928 610 105 17	plate	89	1	
1	928 610 105 19	plate	90	1	
(1)	928 610 105 21	plate	90	1	M 193
(1)	928 610 105 22	plate	91	1	
2	N 013 935 2	tapping screw BZ 6,3 X 25		2	
3	N 902 076 01	washer 6,4 X 17 X 1,6		2	
4	928 628 287 00	grommet		2	
5	999 507 034 02	speed nut B 6,3		2	
6	999 607 001 00	fuse 1 AMP.		X	
(6)	999 607 004 00	fuse 5 AMP.		X	
(6)	999 607 005 00	fuse 7,5 AMP.		X	
(6)	N 017 131 11	fuse 10 AMP.		X	
(6)	999 607 007 00	fuse 15 AMP.		X	
(6)	N 017 131 13	fuse 20 AMP.		X	
(6)	999 607 009 00	fuse 25 AMP.		X	
(6)	999 607 010 00	fuse 30 AMP.		X	
7	443 941 802	tool		1	
		relay	-88		

Pos	Part Number	Name	Remarks	Qty	Model
I-II	928 615 115 00	double relay rear window heating		1	
IV	141 951 253 B	relay x-contact		1	
V	111 953 227 D	flasher relay		1	
(V)	928 615 131 00	flasher relay trailer coupling		1	M 208
VI	928 615 128 00	relay power windows		1	
VII U	928 618 205 00	interval relay		1	
VII	993 615 101 00	switch unit		1	
VIII	141 951 253 B	relay defroster		1	
IX	928 618 113 01	relay intensive windscr. washer		1	
X	141 951 253 B	relay fresh air inlet box		1	
XI	928 618 223 00	interference-suppr. choke		1	
XII	141 951 253 B	relay fanfare		1	
XIII	141 951 253 B	relay fog headlamp		1	
XIII	928 615 117 02	relay fog headlamp		1	M 193
XIV	141 951 253 B	relay starter		1	
XV	928 618 109 01	relay kickdown		1	M 249
XVI	928 615 203 00	relay ignition control unit		1	
XVII	928 615 124 01	relay anti-lock brake system		1	
XVIII	944 615 119 00	relay cooling air control		1	
XIX	928 618 111 00	relay headlight washer system		1	
XX	141 951 253 B	relay fuel pump		1	
XXI	928 618 225 01	relay interior light		1	
XXII	928 615 125 00	bridge back-up light		1	M 481
XXII	141 951 253 B	relay back-up light		1	M 249
XXIII	928 618 107 04	relay headlamp		1	
XXIV	928 618 107 04	relay headlamp		1	
XXIII	928 618 107 01	relay headlamp		1	(GB)
XXIV	928 618 107 01	relay headlamp		1	(GB)
XXV	141 951 253 B	relay lh-jetronic		1	
		relay	89		
I-II	928 615 115 00	double relay rear window heating		1	
IV	141 951 253 B	relay x-contact		1	
V	111 953 227 D	flasher relay		1	
V	944 615 112 02	relay trailer coupling		1	M 208
VI	944 615 112 02	relay power windows		1	
VI	944 615 116 00	relay power windows		1	(AUS)
VII	993 615 101 00	switch unit		1	
VII I	141 951 253 B	relay defroster		1	

Pos	Part Number	Name	Remarks	Qty	Model
IX	928 618 113 01	relay intensive windscr. washer		1	
X	141 951 253 B	relay blower		1	
XI	928 618 223 00	interference-suppr. choke		1	
XII	141 951 253 B	relay fanfare		1	
XIII	141 951 253 B	relay fog headlamp		1	
XIII	928 615 117 02	relay fog headlamp		1	M 193
XIV	141 951 253 B	relay starter		1	
XV	928 618 108 00	relay kickdown		1	
XVI	928 615 203 00	relay ignition control unit		1	
XVII	928 615 124 01	relay anti-lock brake system		1	
XVIII	944 615 119 00	relay cooling air control		1	
XIX	928 618 111 00	relay headlight washer system		1	
XX	141 951 253 B	relay fuel pump		1	
XXI	928 618 225 01	relay interior light		1	
XXII	928 615 125 00	bridge back-up light		1	M 481
XXII	928 615 114 00	relay back-up light		1	M 249
XXIII	928 618 107 04	relay headlamp		1	
XXIV	928 618 107 04	relay headlamp		1	
XXIII	928 618 107 01	relay headlamp		1	(GB)
XXIV	928 618 107 01	relay headlamp		1	(GB)
XXV	141 951 253 B	relay lh-jetronic		1	
		relay	90		
I-II	928 615 115 00	double relay rear window heating		1	
IV	141 951 253 B	relay fog headlamp		1	
V	141 951 253 B	relay starter		1	
VI	944 615 119 00	relay cooling air control		1	
VII	928 618 111 00	relay headlight washer system		1	
IX	141 951 253 B	relay fog headlamp		1	M 193
IX	928 618 113 01	relay intensive windscr. washer		1	
X	141 951 253 B	relay x-contact		1	
XI	993 615 101 00	switch unit		1	
XII	141 951 253 B	relay blower		1	
XIII	111 953 227 D	flasher relay		1	
XIII	928 615 131 00	flasher relay trailer coupling		1	M 208
XIV	141 951 253 B	relay defroster		1	
XV	928 615 124 01	relay anti-lock brake system		1	
XVI	141 951 253 B	relay fanfare		1	

Pos	Part Number	Name	Remarks	Qty	Model
XVII	928 618 108 00	relay kickdown		1	M 249
XVIII	928 615 125 00	bridge back-up light		1	M 481
XVIII	928 615 114 00	relay back-up light		1	M 249
XIX	928 618 225 01	relay interior light		1	
XXI	928 618 223 00	interference-suppr. choke		1	
XXII	928 615 203 00	relay ignition control unit		1	
XXIII	928 618 107 04	relay headlamp		1	
XXIV	928 618 107 04	relay headlamp		1	
XXIII	928 618 107 01	relay headlamp		1	(GB)
XXIV	928 618 107 01	relay headlamp		1	(GB)
XXV	141 951 253 B	relay lh-jetronic		1	
XXVI	141 951 253 B	relay fuel pump		1	
		relay	91-		
I-II	928 615 115 00	double relay rear window heating		1	
IV	141 951 253 B	relay fog headlamp		1	
V	141 951 253 B	relay starter		1	
VII	928 618 111 00	relay headlight washer system		1	
VIII	141 951 253 B	relay fog headlamp		1	(J)
VIII	928 615 125 00	bridge fog headlamp		1	

Pos	Part Number	Name	Remarks	Qty	Model
IX	928 618 113 01	relay intensive windscr. washer		1	
X	141 951 253 B	relay x-contact		1	
XI	993 615 101 00	switch unit		1	
XII	141 951 253 B	relay blower		1	
XIII	111 953 227 D	flasher relay		1	
XIII	928 615 131 00	flasher relay trailer coupling		1	M 208
XIV	141 951 253 B	relay defroster		1	
XV	928 615 124 01	relay anti-lock brake system		1	
XVI	141 951 253 B	relay fanfare		1	
XVII	928 618 108 00	relay kickdown		1	M 249
XVIII	928 615 125 00	bridge back-up light		1	M 481
XVIII	928 615 114 00	relay back-up light		1	M 249
XIX	964 618 221 00	control unit speedometer		1	
XXI	928 618 223 00	interference-suppr. choke		1	
XXII	928 615 203 00	relay ignition control unit		1	
XXIII	928 618 107 04	double relay for		1	
XXIV	928 618 107 04	headlamp		1	
XXV	141 951 253 B	relay lh-jetronic		1	
XXVI	141 951 253 B	relay fuel pump		1	

Pos	Part Number	Name	Remarks	Qty	Model
		relay for front seat electrically adjustable see group 8/08/20			
		relay centre console			
-	928 618 102 03	relay seat belt		1	
-	928 618 104 00	relay rear window wiper		1	
-	911 617 119 00	switch unit emission control		2	(J)
-	928 637 160 00	relay	89-	1	M 525
-	928 637 160 00	relay	89-	1	M 533
		connector			
9	928 612 331 00	initial housing red		8	
(9)	928 612 331 00	initial housing black		14	
10	928 612 332 00	module housing		22	
11	928 612 335 25	fitting piece -A-		1	
(11)	928 612 335 25	fitting piece -B-		1	
(11)	928 612 335 25	fitting piece -C-		1	
(11)	928 612 335 25	fitting piece -D-		1	
(11)	928 612 335 25	fitting piece -E-		1	
(11)	928 612 335 25	fitting piece -F-		1	
(11)	928 612 335 25	fitting piece -G-		1	
(11)	928 612 335 25	fitting piece -H-		1	
(11)	928 612 335 25	fitting piece -J-		1	
(11)	928 612 335 25	fitting piece -K-		1	
(11)	928 612 335 25	fitting piece -L-		1	
(11)	928 612 335 25	fitting piece -M-		1	
(11)	928 612 335 25	fitting piece -N-		1	
(11)	928 612 335 25	fitting piece -0-		1	
(11)	928 612 335 25	fitting piece -P-		1	
(11)	928 612 335 25	fitting piece -Q-		1	
(11)	928 612 335 25	fitting piece -R-		1	
(11)	928 612 335 25	fitting piece -S-		1	
(11)	928 612 335 25	fitting piece -T-		1	
(11)	928 612 335 25	fitting piece -U-		1	
(11)	928 612 335 25	fitting piece -V-		1	
(11)	928 612 335 25	fitting piece -W-		1	
		- -- E N D -- -			

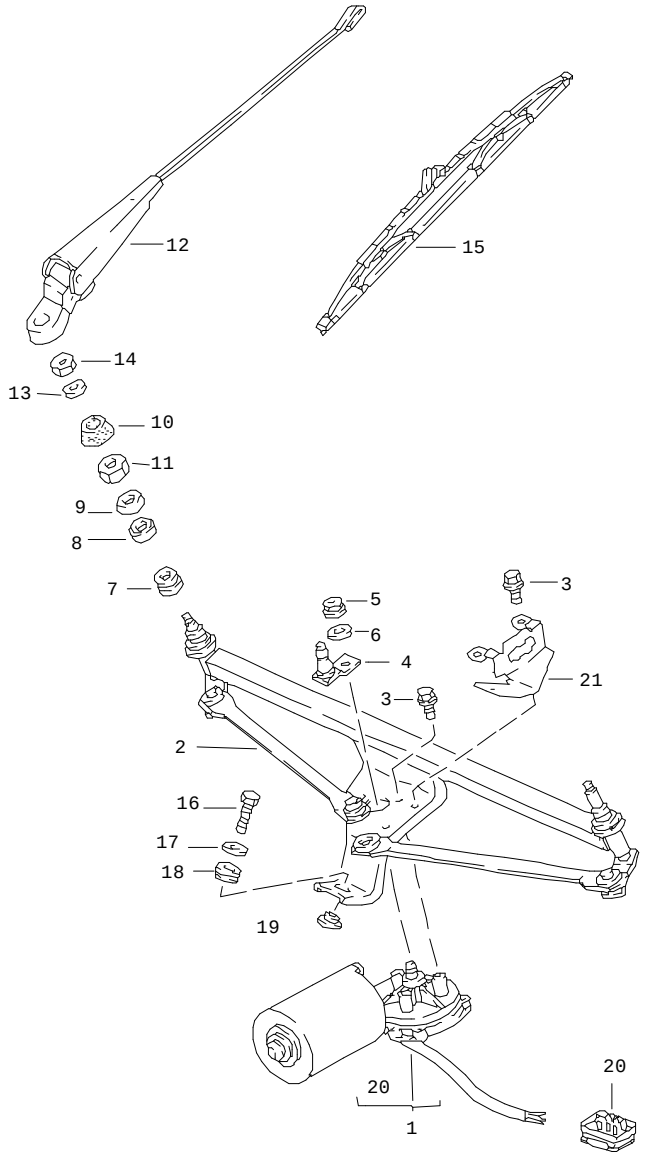

Pos	Part Number	Name	Remarks	Qty	Model
		windscreen wiper system			
1	944 628 303 01	wiper motor	/LL	1	
1	927 628 303 03	wiper motor	/RL	1	
2	928 628 221 03	crank drive	/LL	1	
2	927 628 221 03	crank drive	/RL	1	
3	900 278 002 02	hexagon-head bolt CM 6 X 16	-90	3	
(3)	999 217 164 02	hexagon-head bolt M 6 X 15	91-	3	
4	A 928 628 243 04	lever		1	
(4)	928 628 243 04	lever		1	
5	900 076 025 02	hexagon nut		1	
6	N 012 229 3	spring washer		1	
7	944 628 129 00	rubber bush		2	
8	944 628 128 00	bush		2	
9	944 628 125 00	washer		2	
10	928 628 716 02	grommet	/R	1	
(10)	928 628 717 01	grommet	/R	1	
11	999 034 013 02	hexagon nut		2	
12	928 628 213 10	wiper arm	/LL -90	2	
(12)	928 628 213 10	wiper arm	/LL 91-	2	
(12)	927 628 213 06	wiper arm	/RL -90	2	
(12)	927 628 213 06	wiper arm	/RL 91-	2	
-	928 628 623 00	cap	-90	2	
-	928 628 623 01	cap	91-	2	
	01C	satin black			
13	803 955 437	washer		2	
14	900 076 025 02	hexagon nut		2	

Pos	Part Number	Name	Remarks	Qty	Model	Pos	Part Number	Name	Remarks	Qty	Model
(15)	928 628 217 05	wiper blade	/LL	2							
(15)	927 628 217 00	wiper blade	/RL	2							
(15)	928 628 901 02	wiper blade	91-	2							
16	N 010 217 9	hexagon-head bolt M 6 X 20		1							
17	N 902 707 01	washer 6,1 X 18 X 1,5		1							
18	944 628 126 00	grommet		1							
19	944 628 127 00	bush		1							
-	999 507 246 02	speed nut M 6		1							
20	911 612 867 02	connector		1							
21	928 628 230 00	retaining bracket	/LL	1							
(21)	927 628 230 00	retaining bracket	/RL	1							
		- -- E N D -- -									

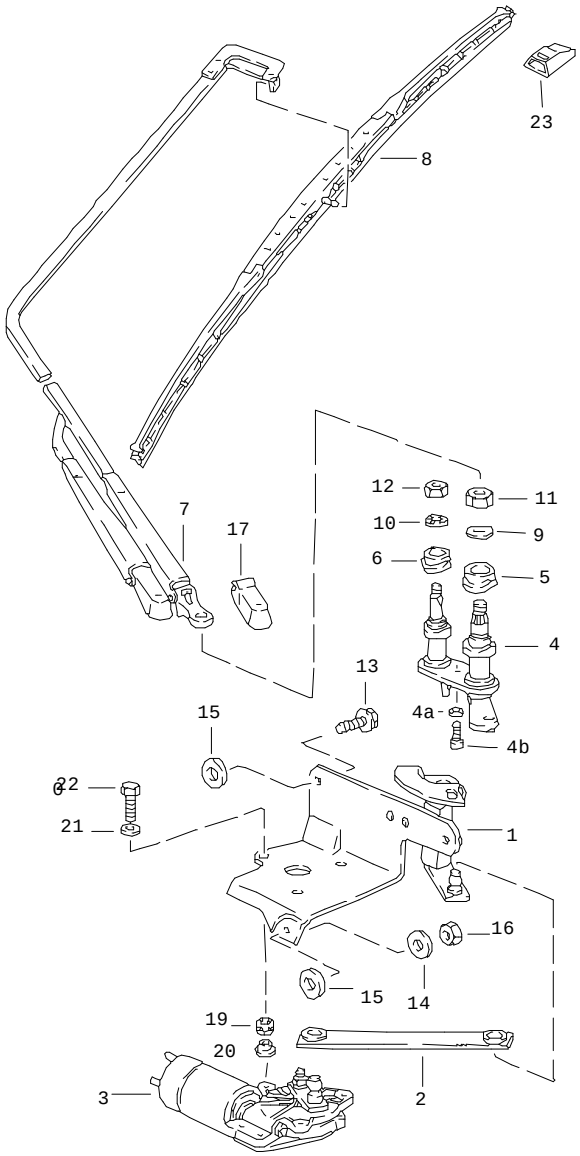

Pos	Part Number	Name	Remarks	Qty	Model
		rear window wiper			
1	928 628 071 03	motor console with bearing	-90	1	
1	928 628 071 03	motor console with bearing	91-	1	
2	928 628 202 02	joint rod		1	
3	928 628 403 02	wiper motor		1	
4	928 628 309 03	wiper bearing		1	
4A	N 012 007 02	lock ring A 6		1	
4B	900 075 057 02	hexagon-head bolt		1	
5	928 628 325 01	bush		1	
6	928 628 326 01	bush		1	
7	928 628 610 05	wiper arm		1	
8	928 628 218 01	wiper blade	-90	1	
(8)	928 628 218 01	wiper blade	91-	1	
9	803 955 437	washer B 8		1	
10	N 011 524 7	washer 6,4		1	
11	900 076 025 02	hexagon nut M 8		1	
12	900 076 010 02	hexagon nut M 6		1	
13	900 075 338 02	hexagon-head bolt M 6 X 25		2	
14	N 011 524 7	washer 6,4 X 14		3	
15	N 011 666 7	washer 6,4		X	
16	900 910 010 09	lock nut VM 6		1	

Pos	Part Number	Name	Remarks	Qty	Model
(17)	928 628 623 00	cap		2	M 471
17	928 628 621 00	cap guiding rod		1	
(17)	928 628 622 00	cap wiper arm		1	
		relay for rear window wiper see group 9/03/10			
19	928 628 287 00	grommet		3	
20	928 628 289 00	bush		3	
21	N 011 524 7	washer 6,4		3	
22	900 075 014 02	hexagon-head bolt M 6 X 18		3	
23	928 628 428 00	cap	-89	1	
		- -- E N D -- -			

Pos	Part Number	Name	Remarks	Qty	Model

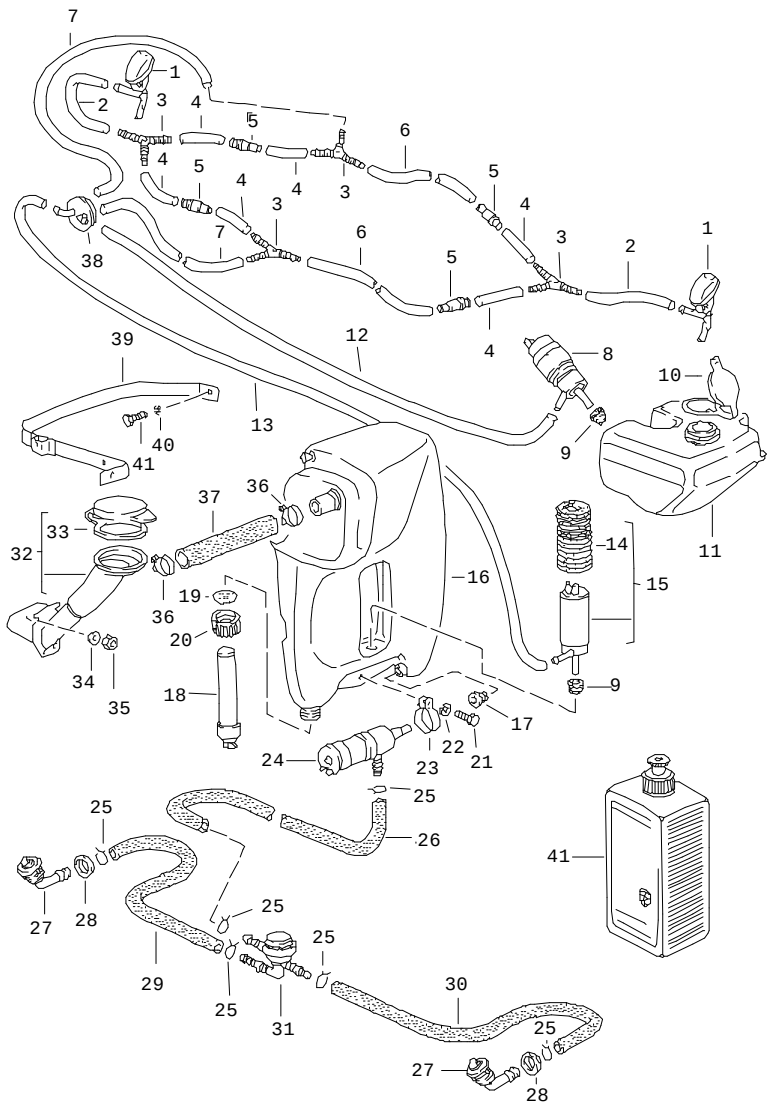

Pos	Part Number	Name	Remarks	Qty	Model
		windscreen washer system headlight washer system intensive windscr. washer			
1	928 628 077 00	nozzle		2	
-	999 181 722 40	hose 4,6 X 1,8		*	
2	-	120 MM		2	
3	999 137 054 40	y-piece		4	
-	999 181 722 40	hose 4,6 X 1,8		*	
4	-	60 MM		6	
5	914 628 215 00	valve		4	
-	999 181 722 40	hose 4,6 X 1,8		*	
6	-	230 MM		2	
7	-	270 MM		2	
8	431 955 651	pump		1	
9	431 955 465 B	gasket		2	
10	928 528 183 03	cover		1	
11	928 528 091 00	container	/LL	1	
(11)	927 528 091 00	container	/RL	1	
-	999 181 722 40	hose 4,6 X 1,8		*	
12	-	780 MM		1	
13	-	1000 MM		1	
14	928 612 504 00	rubber mounting	-88	1	
(14) U	928 612 504 01	rubber sleeve	89-	1	
(15)	928 628 172 01	pump	-88	1	
(15)	928 628 172 01	pump	89-	1	
16 A	928 528 075 01	container		1	

Pos	Part Number	Name	Remarks	Qty	Model
(16)	928 528 075 01	container		1	
17	928 628 193 00	gasket		1	
18	928 641 501 01	tank gauge		1	
19	928 628 737 00	sealing ring		1	
20	928 628 735 00	cap		1	
21	900 075 014 02	hexagon-head bolt M 6 X 18		1	
22	N 011 524 7	washer 6,4		1	
23	928 628 185 01	restraining strap		1	
24	191 955 681	pump		1	
25	999 512 489 00	hose clamp		6	
-	999 181 806 40	hose		*	
26	-	2300 MM		1	
27	928 528 071 02	jet carrier		2	
-	944 628 803 00	rubber washer		4	
28	900 281 002 40	hexagon nut		2	
-	999 181 806 40	hose		*	
29	-	400 MM		1	
30	-	900 MM		1	
31	281 955 187	valve		1	
32	928 528 179 01	filler neck	/LL	1	
(32)	927 528 085 02	filler neck	/RL	1	
33	928 528 181 02	cover		1	
34	900 025 002 02	washer A 4,3	/LL	2	
35	N 043 890 1	tapping screw B 4,2 X 9,5	/LL	2	
(34)	900 151 003 02	washer 6,4	/RL	2	
(35)	900 076 010 02	hexagon nut M 6	/RL	2	
36	999 512 272 02	hose clamp		2	
-	999 181 286 50	hose		*	
37	-	270 MM		1	
38	928 528 073 04	hose connection		1	
39	928 628 087 01	restraining strap		1	
40	900 115 004 01	serrated lock washer 8,4		2	
41	900 075 085 02	hexagon-head bolt M 8 X 20		2	
42	928 628 931 00	silicone remover 1000 ML		1	

- -- E N D -- -

Model	Year	MG	SG	Illustration	Restrictions	Update				
928	91	9	05	905-00		179	16:01	02.09.2004	PORSCHE	PET	PORSCHE

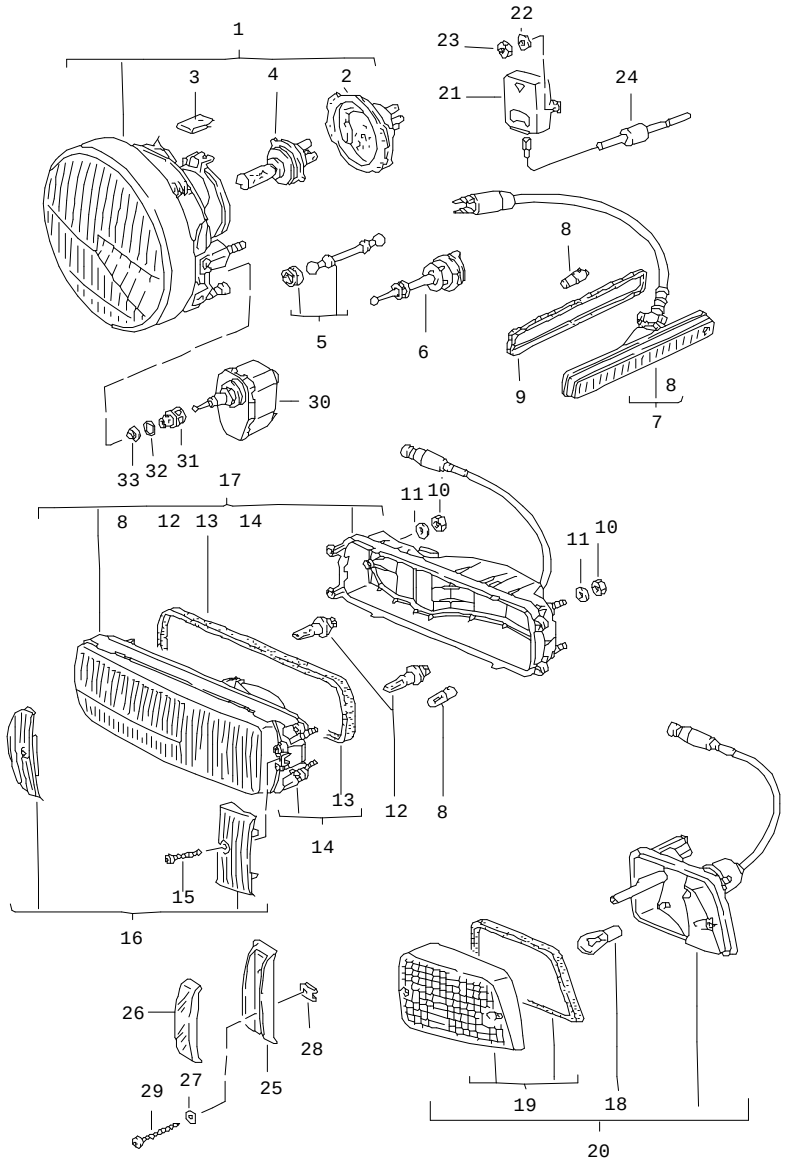

Pos	Part Number	Name	Remarks	Qty	Model
		headlamp direction indicator light front			
1	928 631 101 03	headlamp H-4	/LL	2	
(1)	928 631 102 01	headlamp H-4	/RL	2	M 492
(1)	928 631 101 04	headlamp H-4		2	(F)
2	928 631 923 00	protective cap		2	
3	999 591 751 02	speed nut B 3,9		6	
4	999 631 202 90	halogen bulb H-4		2	
(4)	999 631 202 91	halogen bulb H-4		2	(F)
5	928 631 203 03	bolt	-89	2	
6	928 631 201 02	support	-89	2	
7	928 631 410 01	side turn signal	-90	2	
(7)	928 631 410 01	side turn signal	91-	2	
8	900 631 103 90	bulb 12 V-4 W		4	
9	928 631 448 00	gasket		2	
10	N 011 005 14	hexagon nut M 5		6	
11	N 011 665 3	washer B 5,3		6	
(11)	944 503 255 00	spacer		6	
12	900 631 126 90	halogen bulb H-3		4	
13	951 631 167 00	gasket		2	
14	928 631 951 00	lamp insert	/L	1	
(14)	928 631 952 00	lamp insert	/R	1	

Pos	Part Number	Name	Remarks	Qty	Model
(14)	928 631 951 01	lamp insert	/L	1	(F)
(14)	928 631 952 01	lamp insert	/R	1	(F)
15	900 143 004 00	cross-recess screw		4	
16	928 631 961 00	trim		2	
(16)	928 631 963 00	trim		2	(F)
17	928 631 405 00	additional headlamp	/L	1	
(17)	928 631 406 00	additional headlamp	/R	1	
(17)	928 631 407 00	additional headlamp	/R	1	(F)
(17)	928 631 408 00	additional headlamp		1	(F)
18	900 631 127 90	bulb 12 V-21 W		2	
19	928 631 929 01	lens	/L	1	
(19)	928 631 930 01	lens	/R	1	
20	928 631 421 21	direction indicator light	/L	1	
(20)	928 631 421 20	direction indicator light	/R	1	
21	911 618 231 00	control unit	-88	1	(GB)
22	900 025 003 02	washer A 5,3	-88	2	(GB)
23	N 011 005 14	hexagon nut M 5	-88	2	(GB)
24	927 612 220 00	single line with diode F >>92HS8 41006		1	(GB)
(24)	927 612 220 00	single line with diode F >>92HS8 40937		1	(GB)
(25)	928 505 045 20	protective bar		2	(SA)
25	A 928 505 045 20	protective bar		2	(SA)
25	928 505 045 20	protective bar		2	
	70B	black			

Pos	Part Number	Name	Remarks	Qty	Model
26	928 505 045 20	cap		2	(SA)
27	N 011 663 3	washer B 3,7		4	(SA)
28	999 591 349 02	speed nut		4	(SA)
29	900 143 084 07	oval-head sheetmetal screw		4	(SA)
30	928 624 163 00	adjusting motor	90-	2	
31	928 631 106 00	adapter	90-	2	
32	928 624 165 00	sealing ring	90-	2	
33	928 631 215 00	circlip	90-	2	

- -- E N D -- -

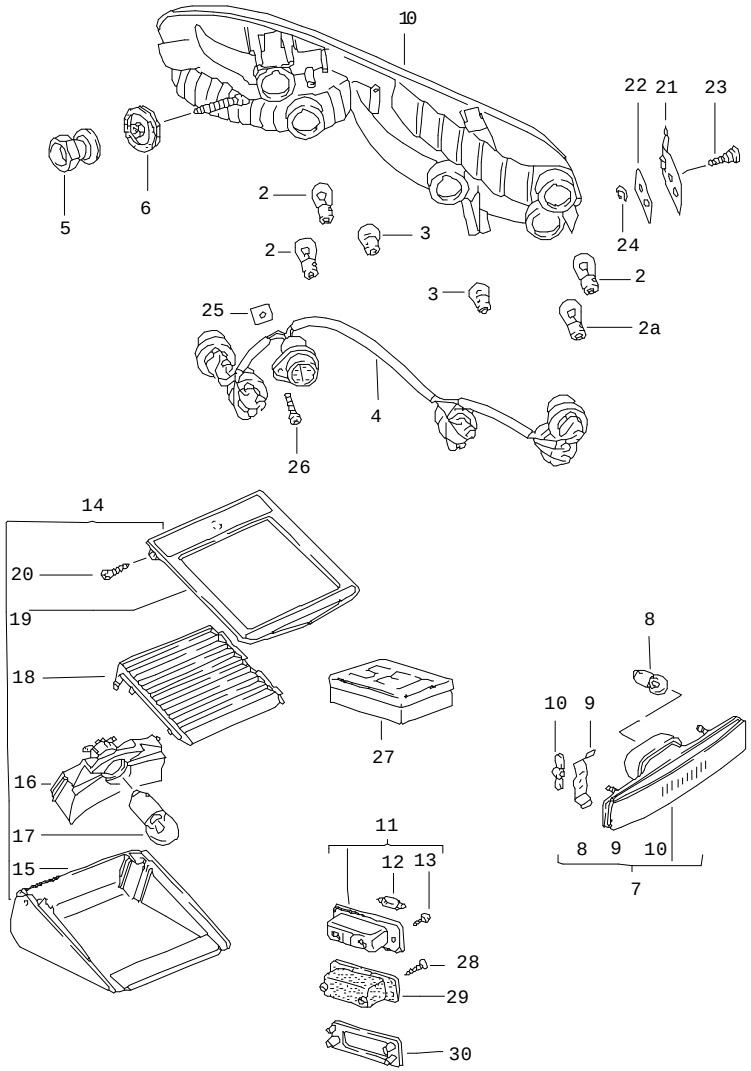

Pos	Part Number	Name	Remarks	Qty	Model
		rear light			
		rear light 1987-1991 exchange in pairs			
1	928 631 483 00	rear light without rear foglamp	/L	1	
(1)	928 631 483 00	rear light without rear foglamp	/L	1	(J)
(1)	928 631 484 00	rear light without rear foglamp	/R	1	
(1)	928 631 484 00	rear light without rear foglamp	/R	1	(J)
(1) A	928 631 483 00	rear light with rear foglamp	/L	1	
(1)	928 631 483 00	rear light with rear foglamp	/L	1	
(1) A	928 631 484 00	rear light with rear foglamp	/R	1	
(1)	928 631 484 00	rear light with rear foglamp	/R	1	
2	900 631 127 90	bulb 12 V - 21 W		3	
2A	999 631 024 90	bulb 12 V - 21/4 W		1	
3	900 631 104 90	bulb 12 V - 5 W		3	
4	928 631 465 01	wiring harness without rear foglamp	-89	2	
(4)	928 631 465 00	wiring harness with rear foglamp		2	
5	928 631 468 00	hexagon nut		2	
6	928 631 467 00	washer		2	
-	999 703 066 50	grommet		2	
11	928 631 620 00	license plate light	-88	2	

Pos	Part Number	Name	Remarks	Qty	Model
(11)	A 964 631 620 01	license plate light	89-	2	
(11)	964 631 620 01	license plate light	89-	2	
	01C	black			
12	900 631 105 90	bulb	-88	2	
(12)	900 631 105 90	bulb 12 V - 5 W	89-	2	
13	900 145 044 07	tapping screw	-88	4	
(13)	999 919 084 07	tapping screw B 4,2 X 22	89-	4	
14	928 631 070 00	additional stoplamp		1	
15	928 631 460 00	housing for light		1	
16	928 631 471 00	reflector		1	
17	900 631 127 90	bulb		1	
18	928 631 472 00	lens		1	
19	928 631 061 00	frame for light		1	
20	900 145 099 07	rais. counters. h. tap. s. B 4,9 X 13		2	
21	928 631 457 01	support		2	
22	928 631 459 01	plate		2	
23	999 014 013 02	pan-head screw		4	
24	N 012 432 1	lock washer		4	
25	928 631 919 00	cover plate		2	
26	N 014 133 8	oval-head screw M 5 X 12		2	
27	A 000 043 069 00	adhesive set for frame for light rear window		1	
28	999 919 067 02	countersunk-head screw KA 3 X 10		4	
29	964 612 620 00	cap		2	
30	928 631 603 00	mounting plate		2	

- -- E N D -- -

Model	Year	MG	SG	Illustration	Restrictions	Update				
928	91	9	05	905-15		179	16:01	02.09.2004	PORSCHE	PET	PORSCHE

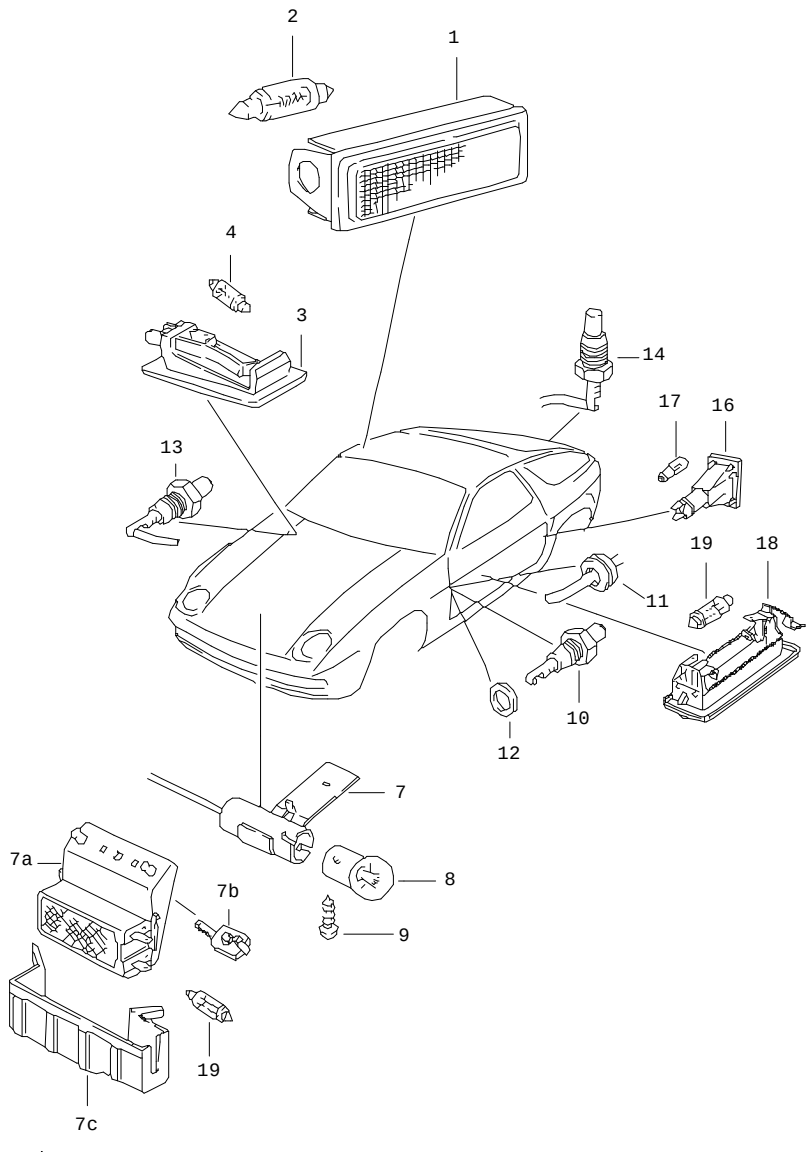

Pos	Part Number	Name	Remarks	Qty	Model
		interior lights			
1	911 632 102 00	light front rear rear lid		3 1 1 1	
2	900 631 106 90	linolite lamp 12 V - 10 W		3	
3	928 632 101 00	glove compartment light		1	
4	999 631 018 90	bulb 12 V - 3 W		1	
(7)	928 632 105 01	engine compartment lamp	-90	1	
7A	928 632 111 01	light	91-	1	
7B	928 632 113 00	cap	91-	1	
7C	928 632 112 00	protection cap	91-	1	
8	900 631 115 90	bulb 12 V - 10 W		1	
9	N 013 970 5	tapping screw B 4,8 X 9,5	-90	1	
(9)	900 143 164 02	screw BZ 4,2 X 13 Z1	91-	1	
-	999 507 050 40	expander nut	91-	1	
10	928 613 147 00	door contact switch		2	
11	321 971 905	rubber sleeve		2	
12	900 031 001 60	washer 8,4		2	
13	964 613 601 00	door contact switch		2	
14	928 613 119 00	door contact switch		1	
-	900 631 102 90	bulb 12 V - 2 W ashtray light		1	
16	928 631 131 00	door guard light		2	
17	900 631 120 90	bulb 12 V - 2 W		2	

Pos	Part Number	Name	Remarks	Qty	Model	Pos	Part Number	Name	Remarks	Qty	Model
18	928 632 109 01	floor light		2							
19	900 631 106 90	linolite lamp 12 V - 10 W		2							
		- -- E N D -- -									

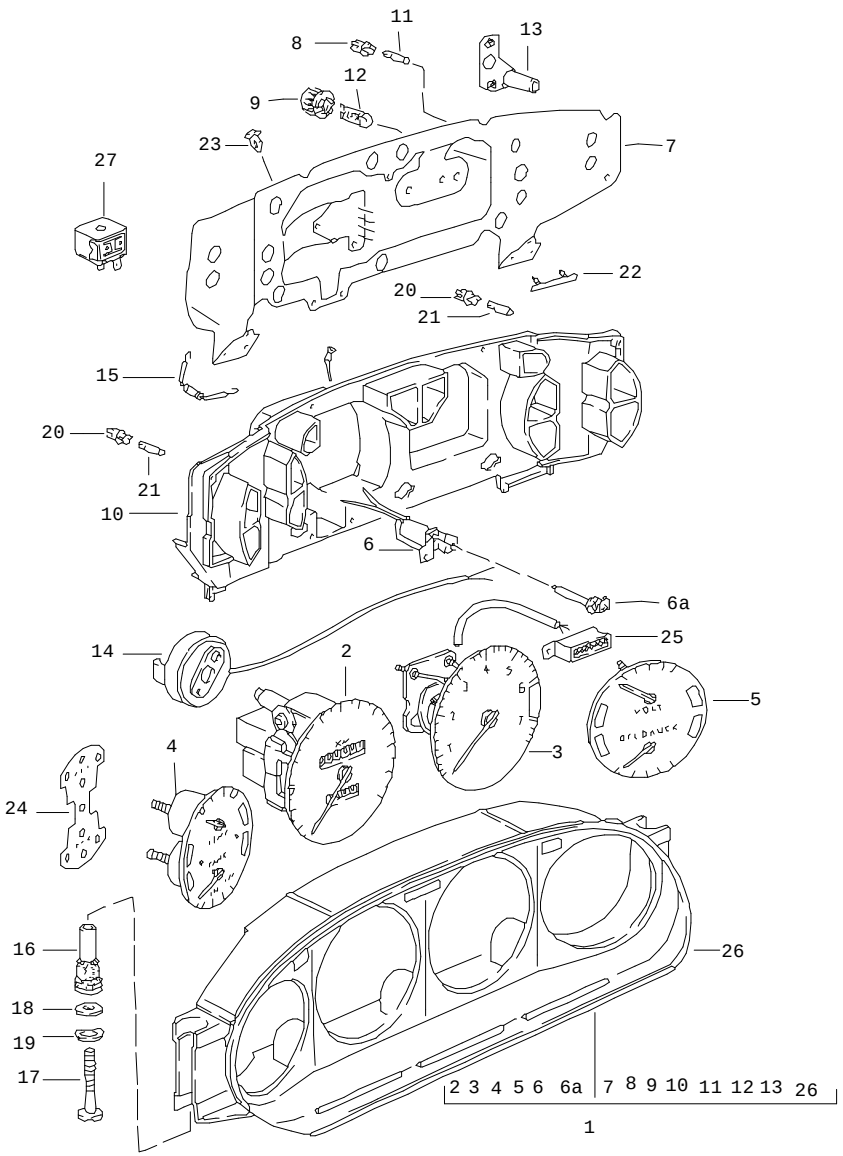

Pos	Part Number	Name	Remarks	Qty	Model
		instrument cluster	-88		
(1)	928 641 104 37	instrument cluster		1	(F)M 481
2	928 641 967 07	speedometer		1	
3	928 641 965 15	tachometer		1	
4	928 641 949 02	indicator - temperat. - fuel gauge -		1	
5	928 641 962 03	indicator - volt - oil -		1	
(1)	928 641 134 03	instrument cluster		1	(F)M 249
2	928 641 967 08	speedometer		1	
3	928 641 965 16	tachometer		1	
4	928 641 949 02	indicator - temperat. - fuel gauge -		1	
5	928 641 962 03	indicator - volt - oil -		1	
(1)	928 641 106 37	instrument cluster		1	M 481 (A)(S)(CH) (D)(I)(N) (SF) (B)(L)(NL)
2	928 641 967 07	speedometer		1	
3	928 641 965 15	tachometer		1	
4	928 641 933 03	indicator - temperat. - fuel gauge -		1	
5	928 641 961 03	indicator - volt - oil -		1	
(1)	928 641 136 03	instrument cluster		1	M 249 (A)(CH)(S) (D)(I)(N) (SF) (B)(L)(NL)
2	928 641 967 08	speedometer		1	
3	928 641 965 16	tachometer		1	
4	928 641 933 03	indicator - temperat. - fuel gauge -		1	

Pos	Part Number	Name	Remarks	Qty	Model
5	928 641 961 03	indicator - volt - oil -		1	
(1)	928 641 116 37	instrument cluster		1	(GB)(HK) M 481
2	928 641 957 06	speedometer		1	
3	928 641 965 15	tachometer		1	
4	928 641 943 02	indicator - temperat. - fuel gauge -		1	
5	928 641 963 03	indicator - volt - oil -		1	
(1)	928 641 126 03	instrument cluster		1	(GB)(HK) M 249
2	928 641 957 05	speedometer		1	
3	928 641 965 16	tachometer		1	
4	928 641 943 02	indicator - temperat. - fuel gauge -		1	
5	928 641 963 03	indicator - volt - oil -		1	
(1)	928 641 127 03	instrument cluster		1	(J) M 249
2	928 641 967 08	speedometer		1	
3	928 641 965 16	tachometer		1	
4	928 641 943 02	indicator - temperat. - fuel gauge -		1	
5	928 641 963 03	indicator - volt - oil -		1	
(1)	928 641 117 37	instrument cluster		1	(SA)M 481
2	928 641 967 09	speedometer		1	
3	928 641 965 15	tachometer		1	
4	928 641 943 02	indicator - temperat. - fuel gauge -		1	
5	928 641 963 03	indicator - volt - oil -		1	
(1)	928 641 137 03	instrument cluster		1	(SA)M 249
2	928 641 967 10	speedometer		1	
3	928 641 965 16	tachometer		1	
4	928 641 943 02	indicator - temperat. - fuel gauge -		1	
5	928 641 963 03	indicator - volt - oil -		1	
		valid for all countries not specif.			
(1)	928 641 114 37	instrument cluster		1	M 481
2	928 641 967 07	speedometer		1	
3	928 641 965 15	tachometer		1	
4	928 641 943 02	indicator - temperat. - fuel gauge -		1	
5	928 641 963 03	indicator - volt - oil -		1	
(1)	928 641 124 03	instrument cluster		1	M 249
2	928 641 967 08	speedometer		1	
3	928 641 965 16	tachometer		1	
4	928 641 943 02	indicator - temperat. - fuel gauge -		1	
5	928 641 963 03	indicator - volt - oil -		1	
6	928 641 921 00	solenoid coil tripmeter		1	
6A	928 641 960 00	zero adjustment shaft tripmeter		1	
(7)	928 641 973 02	printed circuit film		1	
8	999 631 301 90	bulb 12 V-1,2 W		19	
9	928 641 927 00	bulb holder 12 V-3,0 W		4	
10	928 641 968 01	plate		1	

Pos	Part Number	Name	Remarks	Qty	Model
11	999 631 301 90	bulb 12 V-1,2 W		19	
12	900 631 019 90	bulb 12 V-3 W		4	
13	928 641 958 00	printed circuit board temperature gauge fuel-level indicator charging control indicator		3	
(13)	928 641 959 00	printed circuit board oil pressure indicator		1	
14	928 606 210 01	pulse sender		1	
15	928 641 981 01	resistor		1	
16	928 552 049 02	spacer sleeve		4	
17	N 019 908 1	pan-head screw M 6 X 100		2	
18	A N 011 524 7	washer A 6,4		2	
(18)	N 011 524 7	washer A 6,4		2	
19	N 012 226 5	spring washer B 6		2	
20	928 641 982 00	bulb holder		4	
21	928 641 983 00	bulb 12 V-1,2W		4	
22	928 641 985 00	clip		3	
23	928 641 984 00	clip		4	
24	928 641 986 00	gasket		2	
25	944 612 553 00	connector housing		1	M 249
26	928 641 987 00	housing		1	
(27)	928 618 153 00	relay buzzer		1	M 215
		mounting parts pulse sender			
-	915 660 509 00	tensioning spring		1	
-	N 011 524 7	washer 6,4		1	
-	900 075 010 02	hexagon-head bolt M 6 X 12		1	
-	999 651 158 02	cable holder		1	
-	928 606 305 00	retaining bracket		1	
-	113 142 261 A	clip		1	
		- -- E N D -- -			

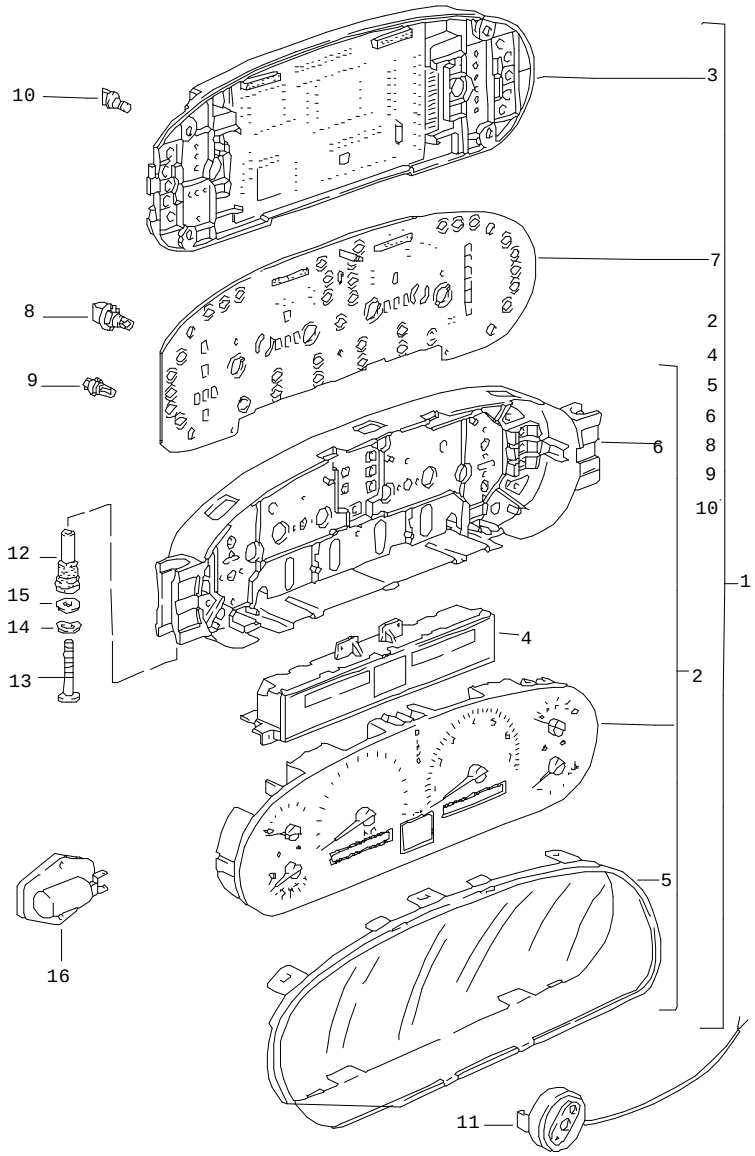

Pos	Part Number	Name	Remarks	Qty	Model
		instrument cluster	89-		
		instrument cluster	89		
1	928 641 158 00	instrument cluster		1	(F)M 481
2	928 641 990 11	assembly - indication -		1	
3	928 641 991 01	assembly - electronics -		1	
4	928 641 992 00	module		1	
1	928 641 158 01	instrument cluster		1	(F)M 481/639
2	928 641 990 11	assembly - indication -		1	
3	928 641 991 01	assembly - electronics -		1	
4	928 641 992 00	module		1	
1	928 641 159 00	instrument cluster		1	(F)M 249
2	928 641 990 06	assembly - indication -		1	
3	928 641 991 01	assembly - electronics -		1	
4	928 641 992 00	module		1	
1	928 641 150 00	instrument cluster		1	M 481 (A)(S)(CH) (D)(I)(N) (SF) (B)(L)(NL)
2	928 641 990 10	assembly - indication -		1	
3	928 641 991 00	assembly - electronics -		1	
4	928 641 992 00	module		1	
1	928 641 150 01	instrument cluster		1	M 481/639 (A) (S) (CH) (D) (I) (N) (NL) (SF) (B) (L)

Pos	Part Number	Name	Remarks	Qty	Model
2	928 641 990 10	assembly - indication -		1	
3	928 641 991 00	assembly - electronics -		1	
4	928 641 992 00	module		1	
1	928 641 151 00	instrument cluster		1	M 249 (A)(S)(CH) (D)(I)(N) (SF) (B)(L)(NL)
2	928 641 990 05	assembly - indication -		1	
3	928 641 991 00	assembly - electronics -		1	
4	928 641 992 00	module		1	
1	928 641 156 00	instrument cluster		1	(GB) M 481
2	928 641 990 13	assembly - indication -		1	
3	928 641 991 03	assembly - electronics -		1	
4	928 641 992 00	module		1	
1	928 641 156 01	instrument cluster		1	(GB)M 481 M 639
2	928 641 990 13	assembly - indication -		1	
3	928 641 991 03	assembly - electronics -		1	
4	928 641 992 00	module		1	
1	928 641 157 00	instrument cluster		1	(GB) M 249
2	928 641 990 08	assembly - indication -		1	
3	928 641 991 03	assembly - electronics -		1	
4	928 641 992 00	module		1	

Pos	Part Number	Name	Remarks	Qty	Model
1	928 641 163 00	instrument cluster		1	(J)M 249
2	928 641 990 07	assembly - indication -		1	
3	928 641 991 05	assembly - electronics -		1	
4	928 641 992 00	module		1	
		valid for all countries not specif.			
1	928 641 154 00	instrument cluster		1	M 481
2	928 641 990 12	assembly - indication -		1	
3	928 641 991 02	assembly - electronics -		1	
4	928 641 992 00	module		1	
1	928 641 154 01	instrument cluster		1	M 481/639
2	928 641 990 12	assembly - indication -		1	
3	928 641 991 02	assembly - electronics -		1	
4	928 641 992 00	module		1	
1	928 641 155 00	instrument cluster		1	M 249
2	928 641 990 07	assembly - indication -		1	
3	928 641 991 02	assembly - electronics -		1	
4	928 641 992 00	module		1	
		instrument cluster	90		
1	928 641 158 02	instrument cluster		1	(F)M 481
2	928 641 990 11	assembly - indication -		1	
3	928 641 991 07	assembly - electronics -		1	
4	928 641 992 00	module		1	

Pos	Part Number	Name	Remarks	Qty	Model
1	928 641 159 01	instrument cluster		1	(F)M 249
2	928 641 990 06	assembly - indication -		1	
3	928 641 991 07	assembly - electronics -		1	
4	928 641 992 00	module		1	
1	928 641 150 02	instrument cluster		1	M 481 (A)(S)(CH) (D)(I)(N) (SF) (B)(L)(NL)
2	928 641 990 10	assembly - indication -		1	
3	928 641 991 06	assembly - electronics -		1	
4	928 641 992 00	module		1	
1	928 641 151 01	instrument cluster		1	M 249 (A)(S)(CH) (D)(I)(N) (SF) (B)(L)(NL)
2	928 641 990 05	assembly - indication -		1	
3	928 641 991 06	assembly - electronics -		1	
4	928 641 992 00	module		1	
1	928 641 156 02	instrument cluster		1	(GB)M 481
2	928 641 990 13	assembly - indication -		1	
3	928 641 991 09	assembly - electronics -		1	
4	928 641 992 00	module		1	
1	928 641 157 01	instrument cluster		1	(GB)M 249
2	928 641 990 08	assembly - indication -		1	
3	928 641 991 09	assembly - electronics -		1	
4	928 641 992 00	module		1	
1	928 641 162 02	instrument cluster		1	(J)M 481
2	928 641 990 12	assembly - indication -		1	
3	928 641 991 11	assembly - electronics -		1	
4	928 641 992 00	module		1	
1	928 641 163 01	instrument cluster		1	(J)M 249
2	928 641 990 07	assembly - indication -		1	
3	928 641 991 11	assembly - electronics -		1	
4	928 641 992 00	module		1	
1	928 641 164 02	instrument cluster		1	(I)M 481
2	928 641 990 15	assembly - indication -		1	
3	928 641 991 12	assembly - electronics -		1	
4	928 641 992 00	module		1	
1	928 641 165 01	instrument cluster		1	(I)M 249
2	928 641 990 16	assembly - indication -		1	
3	928 641 991 12	assembly - electronics -		1	
4	928 641 992 00	module valid for all countries not specif.		1	
1	928 641 154 02	instrument cluster		1	M 481
2	928 641 990 12	assembly - indication -		1	

Pos	Part Number	Name	Remarks	Qty	Model
3	928 641 991 08	assembly - electronics -		1	
4	928 641 992 00	module		1	
1	928 641 155 01	instrument cluster		1	M 249
2	928 641 990 07	assembly - indication -		1	
3	928 641 991 08	assembly - electronics -		1	
4	928 641 992 00	module		1	
		instrument cluster	91-		
1	928 641 158 04	instrument cluster		1	(F)M 481
2	928 641 990 11	assembly - indication -		1	
3	928 641 991 16	assembly - electronics -		1	
4	928 641 992 00	module		1	
1	928 641 159 03	instrument cluster		1	(F)M 249
2	928 641 990 06	assembly - indication -		1	
3	928 641 991 16	assembly - electronics -		1	
4	928 641 992 00	module		1	
1	928 641 150 04	instrument cluster		1	M 481 (A)(S)(CH) (D)(I)(N) (SF) (B)(L)(NL)
2	928 641 990 10	assembly - indication -		1	
3	928 641 991 13	assembly - electronics -		1	
4	928 641 992 00	module		1	

Pos	Part Number	Name	Remarks	Qty	Model
1	928 641 151 03	instrument cluster		1	M 249 (A)(S)(CH) (D)(I)(N) (SF) (B)(L)(NL)
2	928 641 990 05	assembly - indication -		1	
3	928 641 991 13	assembly - electronics -		1	
4	928 641 992 00	module		1	
1	928 641 156 04	instrument cluster		1	(GB)M 481
2	928 641 990 13	assembly - indication -		1	
3	928 641 991 15	assembly - electronics -		1	
4	928 641 992 00	module		1	
1	928 641 157 03	instrument cluster		1	(GB)M 249
2	928 641 990 08	assembly - indication -		1	
3	928 641 991 15	assembly - electronics -		1	
4	928 641 992 00	module		1	
1	928 641 162 04	instrument cluster		1	(J)M 481
2	928 641 990 12	assembly - indication -		1	
3	928 641 991 17	assembly - electronics -		1	
4	928 641 992 00	module		1	
1	928 641 163 03	instrument cluster		1	(J)M 249
2	928 641 990 07	assembly - indication -		1	
3	928 641 991 17	assembly - electronics -		1	
4	928 641 992 00	module		1	

Pos	Part Number	Name	Remarks	Qty	Model
1	928 641 164 04	instrument cluster		1	(I)M 481
2	928 641 990 15	assembly - indication -		1	
3	928 641 991 18	assembly - electronics -		1	
4	928 641 992 00	module		1	
1	928 641 165 03	instrument cluster		1	(I)M 249
2	928 641 990 16	assembly - indication -		1	
3	928 641 991 18	assembly - electronics -		1	
4	928 641 992 00	module		1	
		valid for all countries not specif.			
1	928 641 154 04	instrument cluster		1	M 481
2	928 641 990 12	assembly - indication -		1	
3	928 641 991 14	assembly - electronics -		1	
4	928 641 992 00	module		1	
1	928 641 155 03	instrument cluster		1	M 249
2	928 641 990 07	assembly - indication -		1	
3	928 641 991 14	assembly - electronics -		1	
4	928 641 992 00	module		1	
5	928 641 987 01	housing		1	
6	928 641 968 02	housing		1	
7	928 641 973 03	printed circuit board		1	
8	928 641 982 01	bulb 12V 2W		4	
9	928 641 982 02	bulb 12V 1,5W red		4	
9	999 631 027 90	bulb 12V 1,5W clear		10	
9	928 641 982 04	bulb 12V 1,2W		16	
10	928 641 984 01	knob		4	
11	928 606 210 01	pulse sender	-90	1	
12	928 552 049 02	spacer sleeve		4	
13	N 019 908 1	pan-head screw M 6 X 100		2	
14	N 011 524 7	washer A 6,4		2	
15	N 012 226 5	spring washer B 6		2	
16	928 616 110 00	series resistor		1	
		mounting parts pulse sender			
-	915 660 509 00	tensioning spring	-90	1	
-	N 011 524 7	washer 6,4	-90	1	
-	999 072 005 09	hexagon-head bolt M 6 X 12	-90	1	
-	999 651 158 02	cable holder	-90	1	
-	928 606 305 00	retaining bracket	-90	1	
-	113 142 261 A	clip	-90	1	
		- -- E N D -- -			

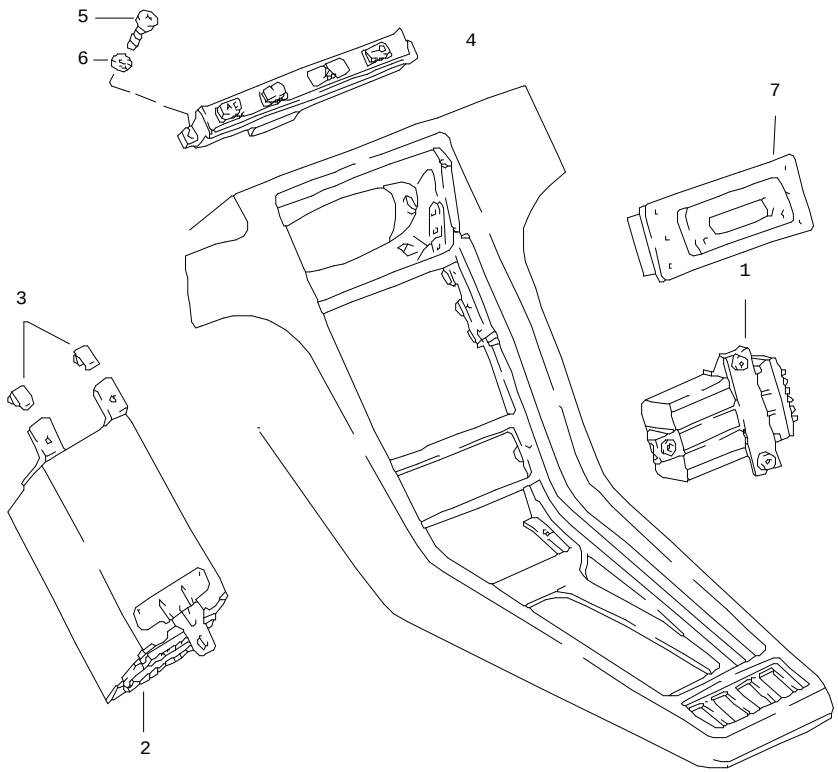

Pos	Part Number	Name	Remarks	Qty	Model
		central indicator			
1	928 641 603 09	bulb controlling device	-90	1	
(1)	928 641 603 09	bulb controlling device	-90	1	M 612
(1) A	928 641 603 11	bulb controlling device	90	1	M 602
(1)	928 641 603 11	bulb controlling device	-90	1	M 612/602
(1)	928 641 603 09	bulb controlling device	91-	1	
(1)	928 641 603 11	bulb controlling device	91-	1	M 602
(1)	928 641 603 11	bulb controlling device	91-	1	(AUS)
(2)	928 641 602 05	central indicator	87	1	(J)
(2)	928 641 602 05	central indicator	87	1	
(2)	928 641 602 05	central indicator	88-	1	
3	999 591 470 02	cable clamp	/RL	2	
4	928 641 609 15	acknowledgement buttons	87 88	1	
(4)	928 641 609 10	acknowledgement buttons without air conditioner	88 89	1	M 637
(4)	928 641 609 13	acknowledgement buttons with air conditioner	88 89	1	M 637
(4)	928 641 609 17	acknowledgement buttons	89	1	
(4)	928 641 609 22	acknowledgement buttons	90-	1	
	70B	black			
5	999 919 008 07	oval-head screw 3,9 X 13		2	
6	N 011 522 14	washer 4,3		2	
7	928 641 701 03	clock digital indication	-89	1	
(7)	928 641 701 05	clock	90-	1	
	70B	black analogue indication			

Pos	Part Number	Name	Remarks	Qty	Model	Pos	Part Number	Name	Remarks	Qty	Model
		mounting parts indicator									
-	900 151 027 02	washer B 5,3		2							
-	N 011 005 14	hexagon nut M 5		2							
		- -- E N D -- -									

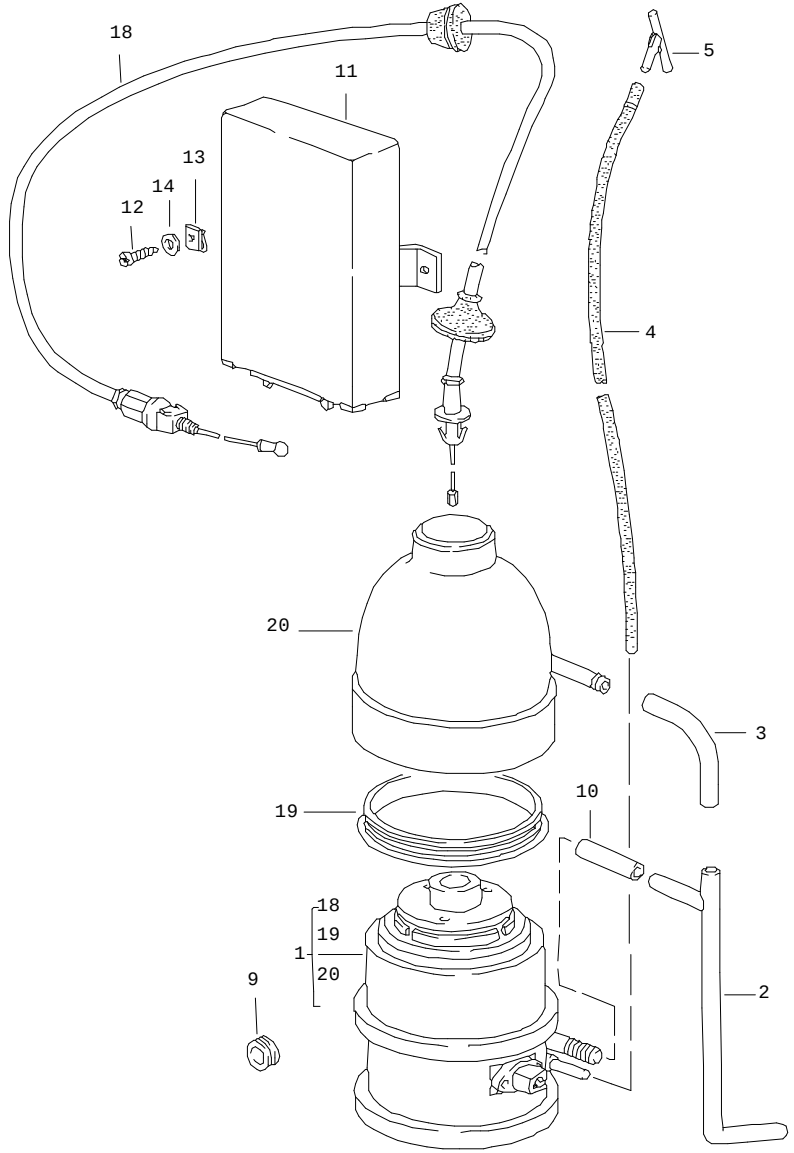

Pos	Part Number	Name	Remarks	Qty	Model
		cruise control	87		
1	928 617 121 04	drive link		1	
2	928 617 124 00	breather pipe		1	
3	928 617 123 00	connecting piece vacuum line see group 8/13/05 POS.5		1 1	
5	928 574 678 02	y-piece		1	
9	021 119 569 A	rubber sleeve		1	
-	N 020 359 1	hose 9 X 14		*	
10	-	48 MM		1	
11	928 617 127 00	cruise control regulator		1	
12	900 187 013 02	tapping screw 4,2 X 13		2	
13	N 015 429 2	speed nut		2	
14	900 151 001 02	washer 4,3		2	
18	928 617 125 03	bowden cable		1	
19	928 617 902 00	gasket		1	
20	928 617 903 00	protection cap		1	
		- -- E N D -- -			

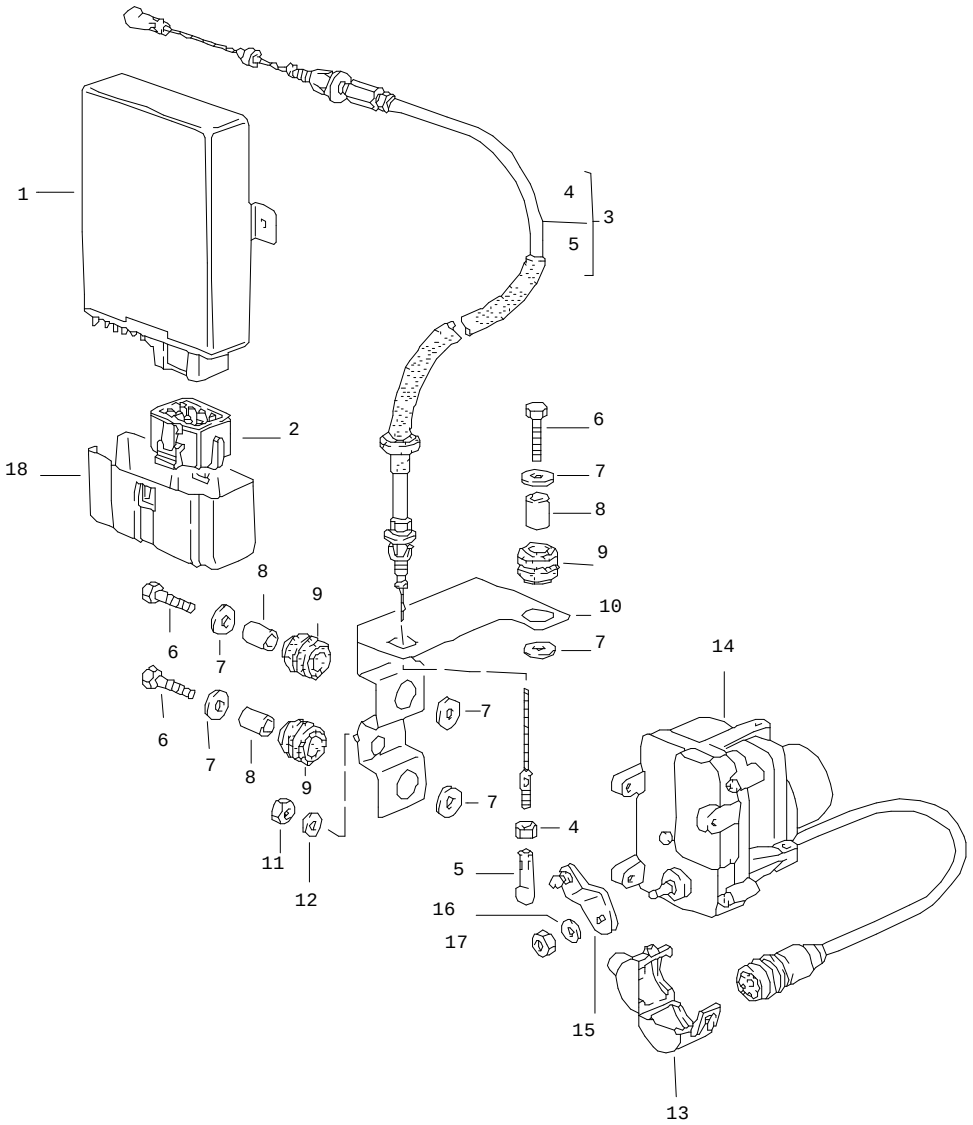

Pos	Part Number	Name	Remarks	Qty	Model
		cruise control	88-		
1	911 617 227 00	control unit		1	
2	911 617 427 00	coding plug		1	
3	928 110 606 00	bowden cable		1	
4	N 011 005 14	hexagon nut		1	
5	911 423 147 00	ball socket		1	
6	900 075 017 02	hexagon-head bolt M 6 X 25		3	
7	N 011 666 7	washer B 6,4		6	
8	999 531 014 02	bush		3	
9	999 702 133 40	rubber mounting		3	
10	928 617 065 00	support		1	
11	900 076 010 02	hexagon nut M 6		2	
12	N 011 524 7	washer A 6,4		2	
13	944 612 450 00	support		1	
14	944 617 121 00	drive link		1	
15	944 423 047 00	lever		1	
16	N 012 229 3	spring washer A 8		1	
17	N 011 018 4	hexagon nut M 8 X 1		1	
18	911 617 133 02	cap		1	
		- -- E N D -- -			

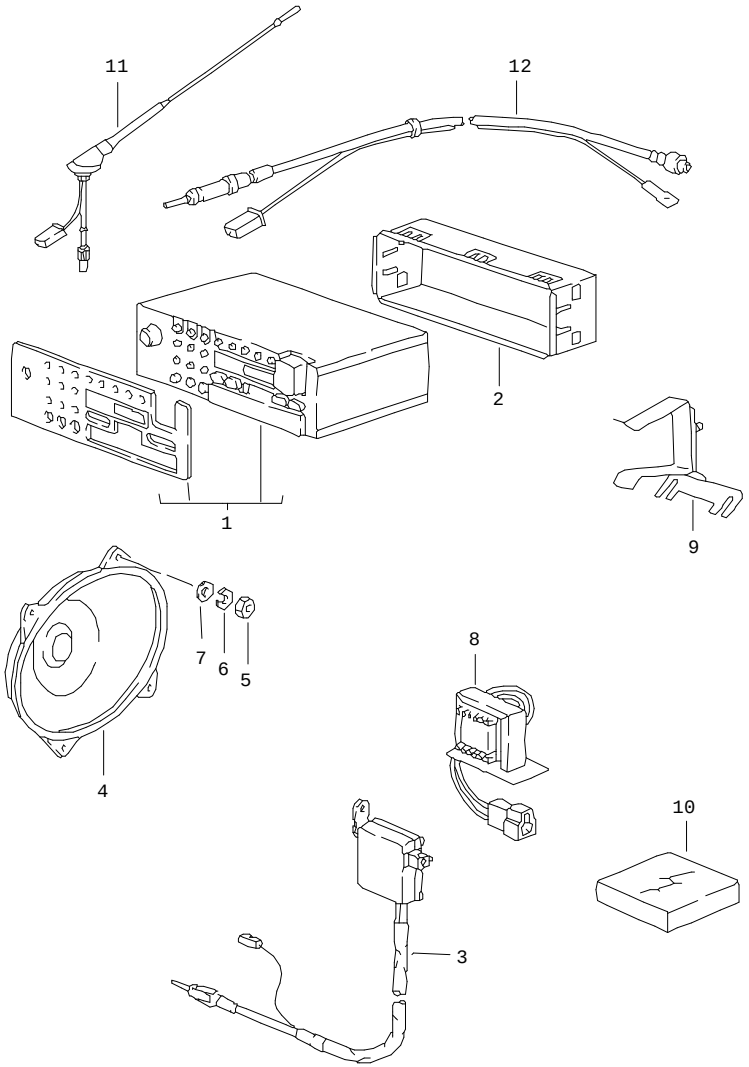

Pos	Part Number	Name	Remarks	Qty	Model
		radio installation parts			
1	> 911 645 168 00	radio LUDWIGSBURG SQM 26		1	
(1)	> 911 645 169 00	radio BERLIN IQR 86	-87	1	
(1)	911 645 071 01	radio BERLIN IQR 88	88-	1	
(1)	> 911 645 159 01	radio BREMEN SQR 46	-90	1	(D)(A)(CH)
(1)	> 911 645 139 02	radio TORONTO SQR 46	-90	1	
(1)	964 645 101 00	radio SYMPHONY	91-	1	
-	928 645 903 00	cover cover left		1	
-	928 645 904 00	cover cover right		1	
-	911 645 263 00	connecting cable for antenna	-88	1	M 326
-	> 928 645 018 00	installation set cd player CD 10	89-	1	
2	911 645 173 02	retaining frame		1	
(2)	911 645 173 03	retaining frame with alarm contact	89-	1	
3	928 645 173 02	antenna booster	-88	1	
-	941 645 183 00	extension cable	-88	1	
4	928 645 402 00	loudspeaker front	-88	2	
(4)	928 645 403 00	loudspeaker rear	-88	2	

Pos	Part Number	Name	Remarks	Qty	Model
5	N 011 004 6	hexagon nut M 4	-88	16	
6	900 027 011 01	lock ring B 4	-88	16	
7	900 151 001 02	washer A 4,3	-88	16	
(8)	999 619 138 00	interference-suppr. choke	-90	1	
9	928 645 011 01	retaining bracket	-90	1	
(9)	928 645 020 00	retaining bracket	91-	1	
10	928 645 901 01	suppression set		1	
11	928 645 201 00	antenna with booster	89-	1	
-	928 645 902 00	antenna rod		1	
12	944 645 202 00	extension cable for antenna	89-	1	
		- -- E N D -- -			

Pos	Part Number	Name	Remarks	Qty	Model

Model	Year	MG	SG	Illustration	Restrictions	Update				
928	91	9	11	911-01		179	16:03	02.09.2004	PORSCHE	PET	PORSCHE

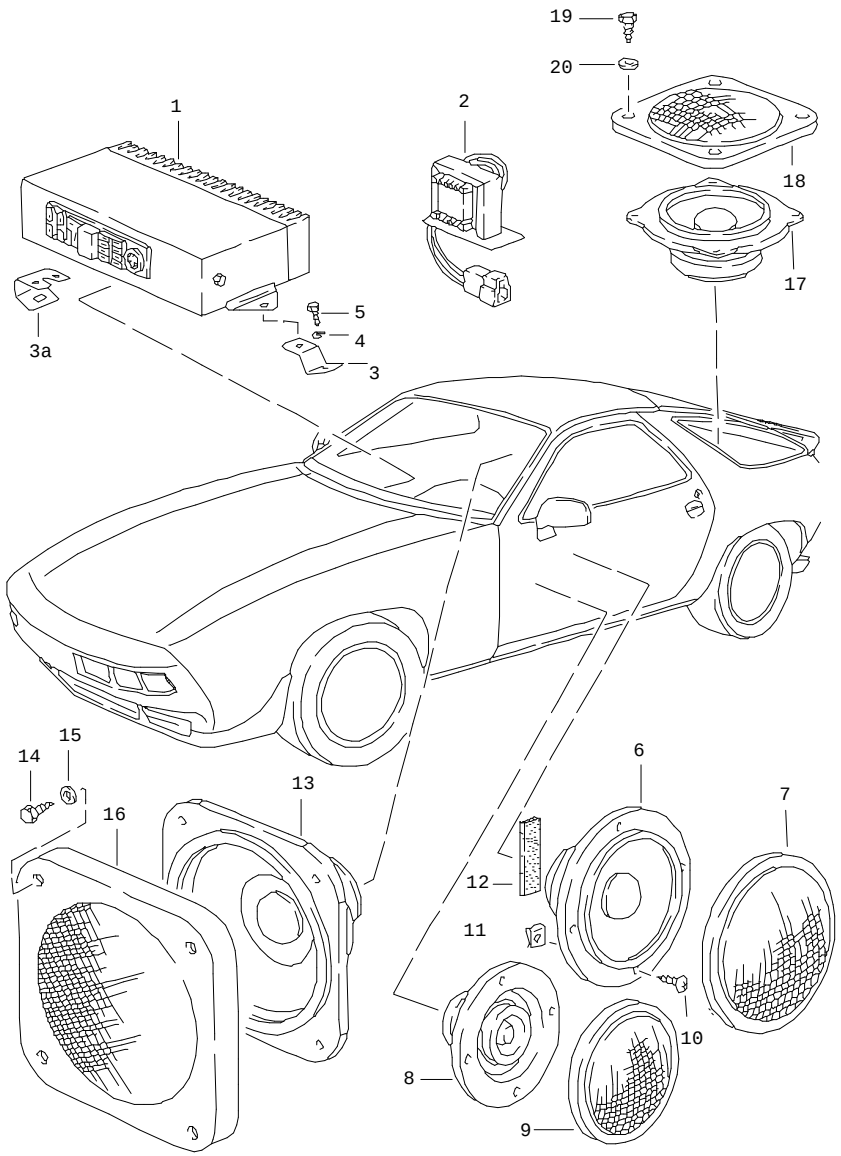

Pos	Part Number	Name	Remarks	Qty	Model
		booster loudspeaker	-88		M 490 M 490
1	> 928 645 405 02	stereo booster		1	
(2)	999 619 141 00	interference-suppr. choke	-90	1	
(2)	999 619 142 00	interference-suppr. choke use also: for subsequent installat. radio		1	
3	928 645 077 01	support		1	
(3A)	928 645 044 00	holder		1	
4	N 012 222 4	spring washer B 5		2	
5	N 013 968 7	tapping screw 4,8 X 13		2	
6	928 645 428 00	mid-range loudspeaker		2	
7	928 645 430 00	grille		2	
8	928 645 427 00	tweeter		2	
9	928 645 429 00	grille		2	
10	900 143 047 07	tapping screw B 4,2 X 19		16	
11	999 591 583 02	speed nut		16	
12	928 612 494 00	piece of plastic foam		2	
13	928 645 411 02	bass loudspeaker		2	
14	900 143 135 07	tapping screw B 4,2 X 45		8	
15	900 025 049 07	washer A 4,3		8	
16	928 645 425 00	cover	/L	1	
(16)	928 645 426 00	cover	/R	1	
17	928 645 413 00	mid-range loudspeaker		2	
18	928 645 423 00	loudspeaker grille		2	

Pos	Part Number	Name	Remarks	Qty	Model	Pos	Part Number	Name	Remarks	Qty	Model
19	900 143 121 07	tapping screw B 4,2 X 16		8							
20	900 025 049 07	washer A 4,3		8							
		wiring harness for loudspeaker see group 9/02/15									
		- -- E N D -- -									

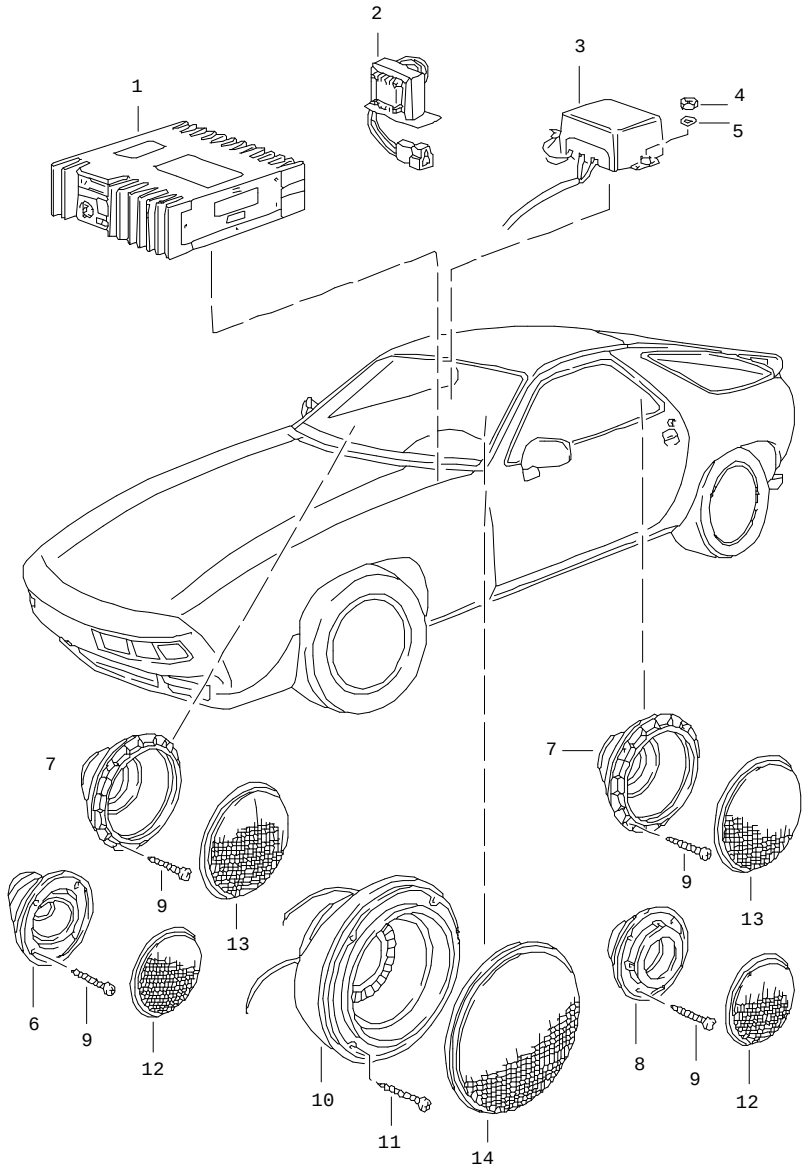

Pos	Part Number	Name	Remarks	Qty	Model
		sound system with booster	89-		
1	> 928 645 435 01	booster		1	
2	999 619 142 00	interference-suppr. choke		1	
3	928 645 441 00	diplexer		2	
4	N 011 004 6	hexagon nut M 4		4	
5	900 025 002 02	washer A 4,3		4	
6	928 645 211 00	tweeter		2	
7	928 645 212 00	mid-range loudspeaker		4	
8	928 645 214 00	tweeter		2	
9	900 143 047 07	tapping screw B 4,2 X 19		32	
10	928 645 215 00	bass loudspeaker	/L	1	
(10)	928 645 216 00	bass loudspeaker	/R	1	
11	900 143 077 02	tapping screw B 4,2 X 32		8	
12	A 928 555 689 00	grille for tweeter		4	
(12)	928 555 689 00	grille		4	
	01C	black for tweeter			
13	A 928 555 691 00	grille for mid-range loudspeaker		4	
(13)	928 555 691 00	grille		4	
	01C	black for mid-range loudspeaker			

Pos	Part Number	Name	Remarks	Qty	Model	Pos	Part Number	Name	Remarks	Qty	Model
14	A 928 555 693 00	grille for woofer		2							
(14)	928 555 693 00	grille		2							
	01C	black for woofer									
		- -- E N D -- -									

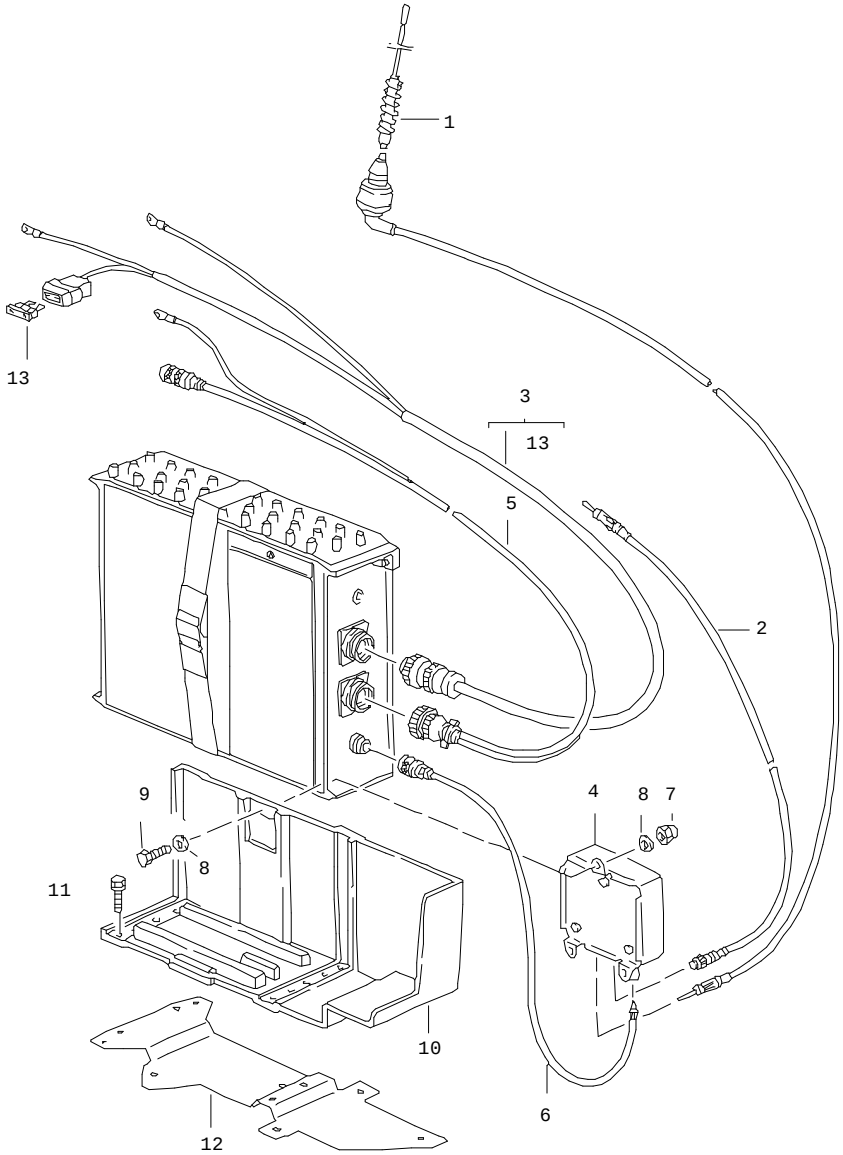

Pos	Part Number	Name	Remarks	Qty	Model
		preparation for telephone			M 496
1	928 646 125 00	antenna		1	
2	928 646 032 00	wiring harness		1	
3	928 646 071 03	wiring harness		1	
4	928 646 115 00	diplexer		1	
5	928 646 035 00	wiring harness		1	
6	928 646 034 00	line		1	
7	N 011 141 2	cap nut M 5		3	
8	900 025 003 02	washer A 5,3		6	
9	900 075 145 02	hexagon-head bolt M 5 X 16		3	
10	928 646 117 00	bracket		1	
11	999 075 048 02	hexagon-head bolt M 6 X 22		4	
12	928 502 581 02	retainer plate		1	
13	999 607 007 00	fuse 15 A		1	
		- -- E N D -- -			

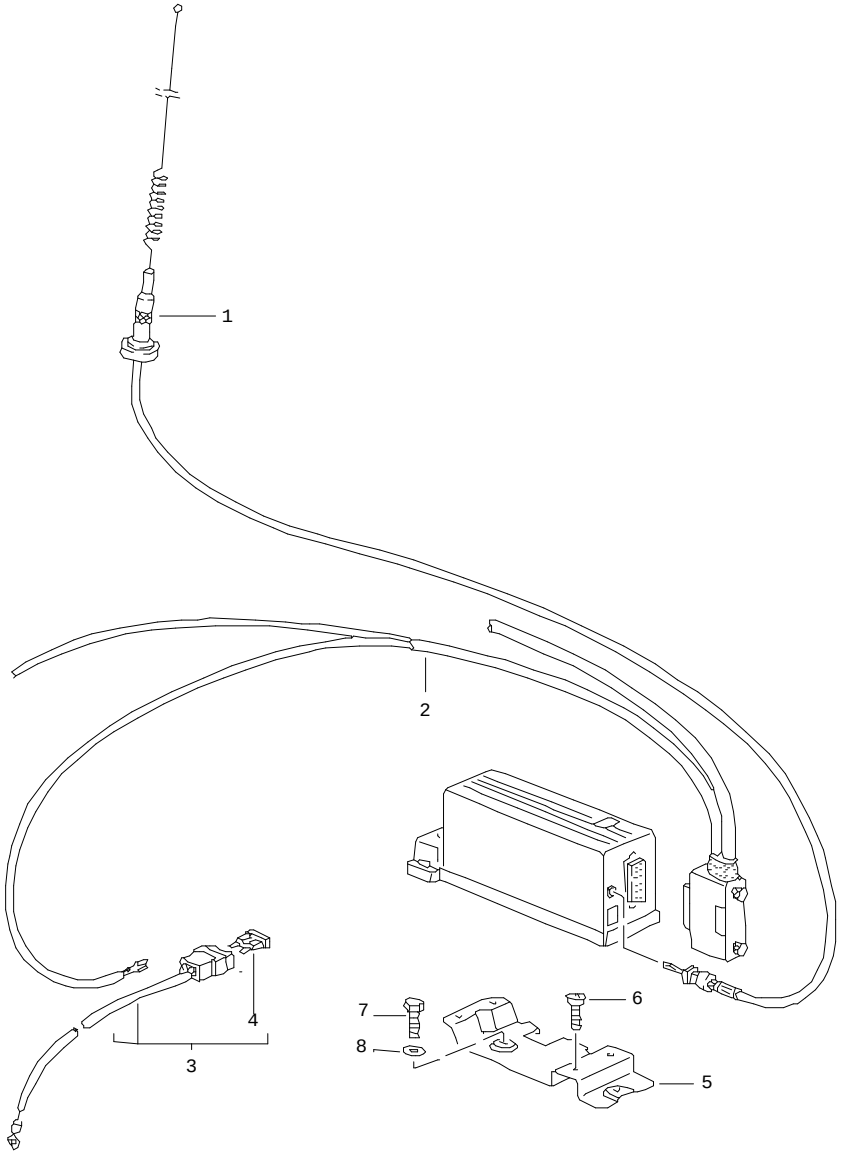

Pos	Part Number	Name	Remarks	Qty	Model
		preparation for telephone			M 195
1	928 646 126 00	antenna		1	
2	928 646 037 00	wiring harness		1	
3	928 646 301 00	wiring harness		1	
4	999 607 007 00	fuse 15 A		1	
5	928 646 015 00	retainer plate		1	
6	900 146 011 02	oval-head screw M 4 X 10		4	
7	900 075 057 02	hexagon-head bolt M 6 X 16		2	
8	900 025 014 02	washer B 6,4		2	
		- -- E N D -- -			

M000	! SUMMARY OF OPTIONAL EXTRAS "M"!
M018	SPORTS STEERING WHEEL
M018	WITH ELEVATED HUB 30MM
M020	SPEEDOMETER WITH TWO SCALES MPH-KM/H
M024	VERSION FOR GREECE
M027	VERSION FOR CALIFORNIA
M034	VERSION FOR ITALY
M058	IMPACT ABSORBERS FRONT AND REAR
M061	VERSION FOR GREAT BRITAIN
M062	VERSION FOR SWEDEN
M063	VERSION LUXEMBURG
M111	VERSION FOR AUSTRIA
M113	VERSION FOR CANADA
M114	VERSION FOR TAIWAN
M119	VERSION FOR SPAIN
M124	VERSION FOR FRANCE
M126	CONTROL AND INDICATIONS IN FRENCH LETTERING
M127	CONTROL AND INDICATIONS IN SCHWEDISCH
M130	CONTROL AND INDICATIONS IN ENGLISH LETTERING
M139	SEAT HEATING SYSTEM, LEFT SEAT
M150	OPERATES WITH LEADED GAS
M157	THREE-BED CATALYST, OXYGEN SENSOR AND DIGITAL
M157	ELECTRICAL ENGINE EQUIPMENT
M158	RADIO BLAUPUNKT RENO SQR 46
M193	VERSION FOR JAPAN
M195	PREPARED FOR CELLULAR-TELEPHONE SYSTEM
M208	TRAILER COUPLING
M215	VERSION FOR SAUDI ARABIA
M219	DIFFERENTIAL
M220	LOCKING DIFFERENTIAL 40 %
M221	PORSCHE-LOCKING DIFFERENTIAL
M249	AUTOMATIC TRANSMISSION
M261	OUTSIDE MIRROR - PLAIN - PASSENGER'S SIDE,
M261	ELECTRICALLY ADJUSTABLE AND HEATABLE
M277	VERSION FOR SWITZERLAND
M286	INTENSIFIED WINDSHIELD WASHER
M293	PREPARED FOR TELEPHONE BECKER
M293	B-2 NETWORK
M295	PREPARED FOR TELEPHONE TEKADE
M295	B-2 NETWORK
M298	CATALYST TOGETHER WITH
M298	MANUAL TRANSMISSION
M299	CATALYST TOGETHER WITH
M299	AUTOMATIC TRANSMISSION
M302	NAME OF TYPE ON REAR END
M317	EQUIPMENT FOR COUNTRIES
M317	WITH DUST-LADEN AIR
M325	VERSION FOR SOUTH AFRICA/NEW ZEALAND
M326	RADIO BLAUPUNKT BERLIN IQR 88
M326	WITH ARI
M328	RADIO BLAUPUNKT BREMEN SQR 46

M328	WITH ARI
M329	RADIO BLAUPUNKT TORONTO SQR 48
M330	RADIO BLAUPUNKT TORONTO SQR 46
M331	RADIO "PORSCHE CR-1"
M335	AUTOMATICAL SAFETY BELT, 3-POINT,
M335	REAR
M340	SEAT HEATING SYSTEM, RIGHT SEAT
M341	CENTRAL LOCKING SYSTEM
M347	FORGED WHEELS PLATINUM-ANODIZED
M347	RIM 7 X 16
M347	TIRE 225/50 VR 16
M383	SPORT SEAT LEFT, ELECTRICAL
M383	VERTICALLY ADJUSTABLE
M387	SPORT SEAT RIGHT, ELECTRICAL
M387	VERTICALLY ADJUSTABLE
M393	CLUB-SPORT - WHEEL 16 INCHES
M395	LIGHT-METAL RIMS,
M395	FORGED, 16 IN.
M400	CAST WHEEL, CLUB-SPORT 7,5/9J X 16
M400	(CAST ALUMINIUM)
M418	SIDE PROTECTION MOLDINGS
M423	BOX FOR CASSETTES AND COINS
M430	FOG HEAD-LAMP YELLOW
M437	COMFORT SEAT LEFT,
M437	ELECTRICALLY ADJUSTABLE
M438	COMFORT SEAT RIGHT,
M438	ELECTRICALLY ADJUSTABLE
M441	PREPARED FOR RADIO
M454	AUTOMATIC SPEED CONTROL
M460	ADDITIONAL INTANK PUMP
M462	WINDSHIELD "SEKURIFLEX"
M463	WINDSHIELD CLEAR
M467	OUTSIDE MIRROR FOR DRIVER'S SIDE, CONVEX,
M467	ELECTRICALLY HEATABLE AND ADJUSTABLE
M471	INTEGRATED REAR SPOILER
M474	SHOCK ABSORBER (SPORTING) FRONT AND REAR
M475	BRAKE PADS WITHOUT ASBESTOS
M479	VERSION FOR AUSTRALIA
M481	MANUAL TRANSMISSION
M482	TIRE PRESSURE GAUGE
M483	DEFERRING ENGINE PARTS FOR RIGHT HAND DRIVE
M484	VERSION FOR USA
M488	INSCRIPTIONS IN GERMAN LANGUAGE
M489	SWITCHES AND INSIGNIAS IN GERMAN LANGUAGE
M490	SOUND SYSTEM
M492	FOR LEFT-HAND TRAFFIC
M494	ADDITIONAL AMPLIFIER
M496	PREPARED FOR PHILIPS TELEPHONE "C"-NETWORK
M498	WITHOUT VEHICLE-TYPE-LETTERING ON REAR END
M499	VERSION FOR GERMANY
M513	BACK-SUPPORT (LORDOSE) RIGHT SEAT

M525	ANTI-THEFT DEVICE WITH CONTINUOUS SOUND
M528	OUTER REAR VIEW MIRROR FOR PASSENGER'S SIDE
M528	- CONVEX - ELECTRICALLY HEATABLE AND ADJUSTABLE
M533	ANTI-THEFT DEVICE
M537	SEATING POSITION CONTROL FOR
M537	CONFORT SEAT, LEFT
M538	SEATING POSITION CONTROL
M538	FOR CONFORT SEAT, RIGHT
M553	VERSION FOR USA, CANADA
M562	AIRBAGDRIVER'S SIDE AND FRONT PASSENGER'S SIDE
M564	WITHOUT AIRBAG
M567	WINDSHIELD TINTED, UPPER PART
M567	DARKER COLOURED
M570	AIR CONDITIONER WITH IMPROVED EFFICIENCY
M573	AIR CONDITIONER
M576	WITHOUT REAR FOG LAMP
M586	BACK-SUPPORT (LORDOSE) LEFT SEAT
M593	ANTIBLOCK SYSTEM (BOSCH)
M595	REAR SPOILER WITH COLOR OF THE CAR
M602	ARAISED STOP LAMP
M612	PREPARED FOR PHILIPS TELEPHONE "C2"-NETWORK
M637	CLUB-SPORT "CS"
M639	VERSION "GT"
M650	ELECTRICAL SLIDING ROOF
M680	HI-FI SOUND SYSTEM WITH BOOSTER
M685	REAR SEATS, DEVIDED
M686	RADIO BLAUPUNKT LUDWIGSBURG SQM 26 ARI
M688	RADIO BLAUPUNKT BOSTON SQM 23
M690	CD-PLAYER "CD-10"
M690	RADIO + ARI
M691	CD-PLAYER "CD-2" WITH RADIO
M900	TOURIST'S
M900	CARS
M933	SEAT COVERS, REAR
M933	CLOTH/LEATHER/LEATHER
M935	SEAT COVERS REAR, DRAPED LEATHER
M948	SEAT COVERS, FRONT
M948	CLOTH/LEATHER/LEATHER
M980	SEAT COVER - DRAPED LEATHER
M981	LEATHER EQUIPMENT
M983	SEAT COVERS FRONT, LEATHER
M986	PARTIAL LEATHER EQUIPMENT

TR203

THIS PARTS CATALOGUE CONTAINS ALL ORDER INFORMATION OF
TYPE 928 FROM MODEL YEAR 1987 TO MODEL YEAR 1991

IT IS AVAILABLE IN TWO EDITIONS IN THE FOLLOWING LANGUAGES:

EDITION
USA, CANADA - *

EDITION
ALL OTHER COUNTRIES - GERMAN

* - ENGLISH

- FRENCH

- ITALIAN

- SPANISH

UPDATING IS BEING PERFORMED BY CHANGING OF UPDATE.

THE EDITION CAN BE RECOGNIZED BY THE CURRENT NO.
YEAR IN THE BOTTOM LINE OF SUBJECT UPDATE.

THE PREVIOUS UPDATE SHOULD NO LONGER BE USED.

ALL ILLUSTRATIONS ARE SUBJECT TO CHANGE WITHOUT OBLIGATION.

Model	Year	MG	SG	Illustration	VIN No.	Update		
928	91	9	12	912-01		179	16:03	02.09.2004

```
TR006
    EXPLANATION OF THE ABRIDGED VERSION OF THE VEHICLE IDENT. NUMBERS (VIN)
    ======================================================================
    USED IN THE CATALOGUE
    =====================

     DIGIT:                1 2 3  4 5 6  7 8  9  10  11  12  13 14 15 16 17

     EXAMPLE:              W P O  Z Z Z  9 2  Z   K   S   8   4  0  1  2  5
                                          ===      =   =   =   =============
                                           !       !   !   !         !
VEHICLE TYPE 1ST+2ND DIGIT----------------+       !   !   !         !
                                                  !   !   !         !
MODEL YEAR----------------------------------------+   !   !         !
                                                      !   !         !
MANUFACTURING LOCATION--------------------------------+   !         !
                                                          !         !
VEHICLE TYPE 3RD DIGIT------------------------------------+         !
                                                                   !
SERIAL NUMBER------------------------------------------------------+
```

Model	Year	MG	SG	Illustration	VIN No.	Update		
928	91	9	12	912-01		179	16:04	02.09.2004

FR006

VEHICLE TYPE	MY	VIN	ENGINE TYPE
928 S4	87 H	92HS8 40001>45000	M28.41/42, 235 KW
928 S4 (J)	87 H	92HS8 49501>49999	M28.42, 235 KW
928 S4 (USA)(CDN)	87 H	92HS8 60001>65000	M28.41/42, 235 KW
928 S4	88 J	92JS8 40001>45000	M28.41/42, 235 KW
928 CS M637	88 J	92JS8 45001>46000	M28.41, 235 KW
928 S4 (J)	88 J	92JS8 49501>49999	M28.42, 235 KW
928 S4 (USA)(CDN)	88 J	92JS8 60001>65000	M28.41/42, 235 KW
928 CS M637 (USA)(CDN)	88 J	92JS8 65001>66000	M28.41, 235 KW
928 S4/CS	89 K	92KS8 40001>45000	M28.41/42, 235 KW
928 GT	89 K	92KS8 40001>45000	M28.47, 243 KW
928 S4/CS (USA)(CDN)	89 K	92KS8 60001>65000	M28.41/42, 235 KW
928 GT (USA)(CDN)	89 K	92KS8 60001>65000	M28.47, 243 KW
928 S4	90 L	92LS8 40001>49500	M28.42, 235 KW
928 GT	90 L	92LS8 40001>49500	M28.47, 243 KW
928 S4 (USA)(CDN)	90 L	92LS8 60001>69500	M28.42, 235 KW
928 GT (USA)(CDN)	90 L	92LS8 60001>69500	M28.47, 243 KW
928 S4	91 M	92MS8 00001>05000	M28.42, 235 KW
928 GT	91 M	92MS8 00001>05000	M28.47, 243 KW
928 S4 (USA)(CDN)	91 M	92MS8 10001>15000	M28.42, 235 KW
928 GT (USA)(CDN)	91 M	92MS8 10001>15000	M28.47, 243 KW

TR003

```
      EXPLANATION OF THE MOTOR-NUMBERS USED IN THE CATALOGUE
      ======================================================


      DIGIT:                                          1 2 3   4 5 6 7 8

      EXAMPLE:                                        8 1 L   0 0 1 3 6
                                                      = = =   =========
                                                      ! ! !       !
      ENGINE TYPE (8 = 8-CYL.-ENGINE)-----------------+ ! !       !
                                                        ! !       !
      ENGINE VERSION------------------------------------+ !       !
                                                          !       !
      MODEL YEAR------------------------------------------+       !
                                                                  !
      SERIAL NUMBER-----------------------------------------------+
```

Model	Year	MG	SG	Illustration	VIN No.	Update	16:04	02.09.2004
928	91	9	12	912-01		179		

MR006

VEHICLE TYPE	ENGINE TYPE	MY	ENGINE NO.	TECHNICAL DATA
928 S4	M28.41	87 H	81H 00001>05000	8CYL/5L/235KW
928 S4 M249	M28.42	87 H	81H 05001>10000	8CYL/5L/235KW
928 S4/CS M637	M28.41	88 J	81J 00001>05000	8CYL/5L/235KW
928 S4 M249	M28.42	88 J	81J 05001>10000	8CYL/5L/235KW
928 S4/CS M637	M28.41	89 K	81K 00001>05000	8CYL/5L/235KW
928 S4 M249	M28.42	89 K	81K 05001>10000	8CYL/5L/235KW
928 GT	M28.47	89 K	85K 00061>50000	8CYL/5L/243KW
928 S4	M28.42	90 L	81L 50001>60000	8CYL/5L/235KW
928 GT	M28.47	90 L	85L 00061>50000	8CYL/5L/243KW
928 S4	M28.42	91 M	81M 50001>60000	8CYL/5L/235KW
928 GT	M28.47	91 M	85M 00001>50000	8CYL/5L/243KW

Model	Year	MG	SG	Illustration	VIN No.	Update		
928	91	9	12	912-01		179	16:04	02.09.2004

```
TR006
    EXPLANATION OF THE TRANSMISSION-NUMBERS USED IN THE CATALOGUE >>MOD.87
    ======================================================================

    DIGIT:                          1 2 3   4 5 6 7 8

    EXAMPLE:                        1 1 H   0 6 8 4 5
                                    = = =   =========
                                    ! ! !       !
    TRANSMISSION TYPE----------------+ ! !       !
                                       ! !       !
    TRANSMISSION VERSION---------------+ !       !
                                         !       !
    MODEL YEAR---------------------------+       !
                                                 !
    SERIAL NUMBER--------------------------------+


    EXPLANATION OF THE TRANSMISSION-NUMBERS USED IN THE CATALOGUE MOD.88>>
    ======================================================================

    DIGIT:                          1  2  3  4  5     6  7  8  9 10 11 12

    EXAMPLE:                        G  2  8  1  2     1  K  0  0  5  4  3
                                    =  ==========     =  =  =============
                                    !      !          !  !       !
                                    !      !          !  !       !
    TRANSMISSION TYPE----------------+      !          !  !       !
                                            !          !  !       !
    TRANSMISSION VERSION--------------------+          !  !       !
                                                       !  !       !
    INDEX OF VARIANTS-----------------------------------+  !       !
                                                          !       !
    MODEL YEAR-------------------------------------------+       !
                                                                  !
    SERIAL NUMBER-----------------------------------------------+


    SHORT TRANSMISSION NO.=================> PORSCHE-TRANSMISSION-TYPE
    ==================================================================

    722 270 21 01 722 326 02  . . .  . . . = A28.12/14
    722 270 32 01 722 360 02  . . .  . . . = A28.16  SEE TPI GR.3/NR.5/12.90
    722 270 32 01 722 360 03  . . .  . . . = A28.16  SEE TPI GR.3/NR.5/12.90
                            I_____________I
                                  V
    SHORT TRANSMISSION NO.        V
    ======================        V
                            _____V_____
    DIGIT:                1    2 3 4  5 6 7

    EXAMPLE:              A    9 0 9  6 3 8
                          =    ============
                          !         !
    TRANSMISSION TYPE----+          !
                                    !
    SERIAL NUMBER------------------+
```

Model	Year	MG	SG	Illustration	VIN No.	Update		
928	91	9	12	912-01		179	16:04	02.09.2004

GR006

VEHICLE TYPE	TRANSM. TYPE	MY	TRANSMISSION NO.	TECHNICAL DATA
928 S4	G28.12	87 H	11H 00001 > 11H 05000	5-SPEED
928 S4 (USA)(CDN))	G28.13	87 H	11H 05000 > 11H 10000	5-SPEED
928 S4 M249	A28.14	87 H	16H 10001 > 16H 15000	4-SPEED
928 S4 (USA)(CDN)(J) M249	A28.12	87 H	16H 00001 > 16H 05000	4-SPEED
928 S4	G28.12	88 J	G2812 1J00001>1J10000	5-SPEED
928 S4 M220	G28.12	88 J	G2812 2J10001>2J20000	5-SPEED
928 CS M637	G28.55	88 J	G2855 2J10001>2J11000	5-SPEED
928 S4 (USA)(CDN)	G28.13	88 J	G2813 1J00001>1J10000	5-SPEED
928 S4 (USA)(CDN) M220	G28.13	88 J	G2813 2J10001>2J20000	5-SPEED
928 S4 M249	A28.14	88 J	A2814 1J00001>1J10000	4-SPEED
928 S4 M249/220	A28.14	88 J	A2814 2J10001>2J20000	4-SPEED
928 S4 (USA)(CDN)(J) M249	A28.12	88 J	A2812 1J00001>1J10000	4-SPEED
928 S4 (USA)(CDN)(J)M249/ 220	A28.12	88 J	A2812 2J10001>2J20000	4-SPEED
928 S4	G28.12	89 K	G2812 1K00001>1K10000	5-SPEED
928 S4 M220	G28.12	89 K	G2812 2K00001>2K20000	5-SPEED
928 CS M637/ 928 GT	G28.55	89 K	G2855 2K00001>2K01000	5-SPEED
928 S4 M249	A28.16	89 K	A2816 1K00001>1K10000	4-SPEED
928 S4 M249/220	A28.16	89 K	A2816 2K00001>2K20000	4-SPEED
928 S4	A28.16	90 L	A2816 3L00001>3L20000	4-SPEED
928 GT	G28.55	90 L	G2855 3L00001>3L20000	5-SPEED
928 S4	A28.16	91 M	A2816 3M00001>3M20000	4-SPEED
928 GT	G28.55	91 M	G2855 3M00001>3M00001	5-SPEED

TR003

LEGENDS AND NOTICES

IN COLUMN -S- STATUS

N	NEW ADDITION
P	PART ALREADY IN PROGRAMME, BUT NEW AT THIS APPLICATION
W	DELETED AT THIS APPLICATION, BUT CONTINUED TO BE CARRIED
A	STOCK TO BE USED UP
U	DELETED WITHOUT REPLACEMENT
*	PART ALSO OR ONLY AVAILABLE IN REPAIR KIT
>	ALSO AVAILABLE IN EXCHANGE

IN COLUMN - ILL. -

1	IDENTIFICATION NO. IN ILLUSTRATION
(1)	PART ONLY SIMILAR AS ILLUSTRATED
-	PART IS NOT ILLUSTRATED

FIG.-NUMBERS FOR WHICH THERE IS SHOWN NO TEXT ARE NOT VALID FOR THIS EDITION OF CATALOGUE

IN COLUMN -PART NUMBER/CODE-

000 000 000 00	PART NUMBER EQUALS ORDERING NO., IF A CODE IS SHOWN, IT WILL HAVE TO BE PART OF ORDERING NUMBER
01C	COLOUR CODE

IN COLUMN -TEXT

INSTALLATION WITH ENGINE OR CHASSIS NUMBER-RANGE

	EXAMPLE:
M 81L 00389>>	FROM ENGINE NO.
F >>92LS84 0889	UP TO CHASSIS NO.

TR201

```
                    IN COLUMN  - A -
                    ----------------

                    IDENTIFICATION LETTER FOR PERIOD OF INSTALLATION
                    THAT IS REPEATED SEVERAL TIMES IN THE CATALOG GROUP.

                    EXPLANATION PLEASE FIND IN TEXT COLUMN OF THE CATALOG GROUP


                    IN COLUMN   - QU -   = NO. OF PIECES
                    ------------------------------------

          1         NUMBER PER APPLICATION

          X         NUMBER AS NEEDED

          *         AVAILABLE ONLY IN RUNNING LENGTHS   1 = 1 METRE


                    IN COLUMN   - MODEL/SYMBOL -
                    ----------------------------

         M650       OPTIONAL EQUIPMENT  -  SEE M-NO. LIST

         -90        LIMITATION OF MODEL YEAR FOR INSTANCE: VALID UP TO
                    END OF MODEL YEAR 1990

        /LL         LHD

        /RL         RHD
                    ---------+
        /V          FRONT    I
                             I
        /H          REAR     I
                             I---> APPLIES TO
        /L          LEFT     I     DIRECTION OF TRAVEL
                             I
        /R          RIGHT    I
                    ---------+

        AUT.        AUTOMATIC

        WW          THE PART CAN BE USED INSTEAD OF THE
                    PRECEDING ONE
```

TR203

EQUIPMENT BY COUNTRY REGULATIONS

(A)	AUSTRIA
(AG)	ARABIAN GULF STATES
(AUS)	AUSTRALIA
(B)	BELGIUM
(CDN)	CANADA
(CH)	SWITZERLAND
(D)	FEDERAL REPUBLIC OF GERMANY
(DK)	DENMARK
(E)	SPAIN
(F)	FRANCE
(GB)	GREAT BRITAIN
(GR)	GREECE
(HK)	HONGKONG
(I)	ITALY
(J)	JAPAN
(L)	LUXEMBURG
(N)	NORWAY
(NL)	NETHERLANDS
(NZ)	NEW ZEALAND
(P)	PORTUGAL
(RC)	TAIWAN
(S)	SWEDEN
(SA)	SAUDI ARABIA
(SF)	FINLAND
(USA)	UNITED STATES OF AMERICA
(ZA)	SOUTH AFRICA