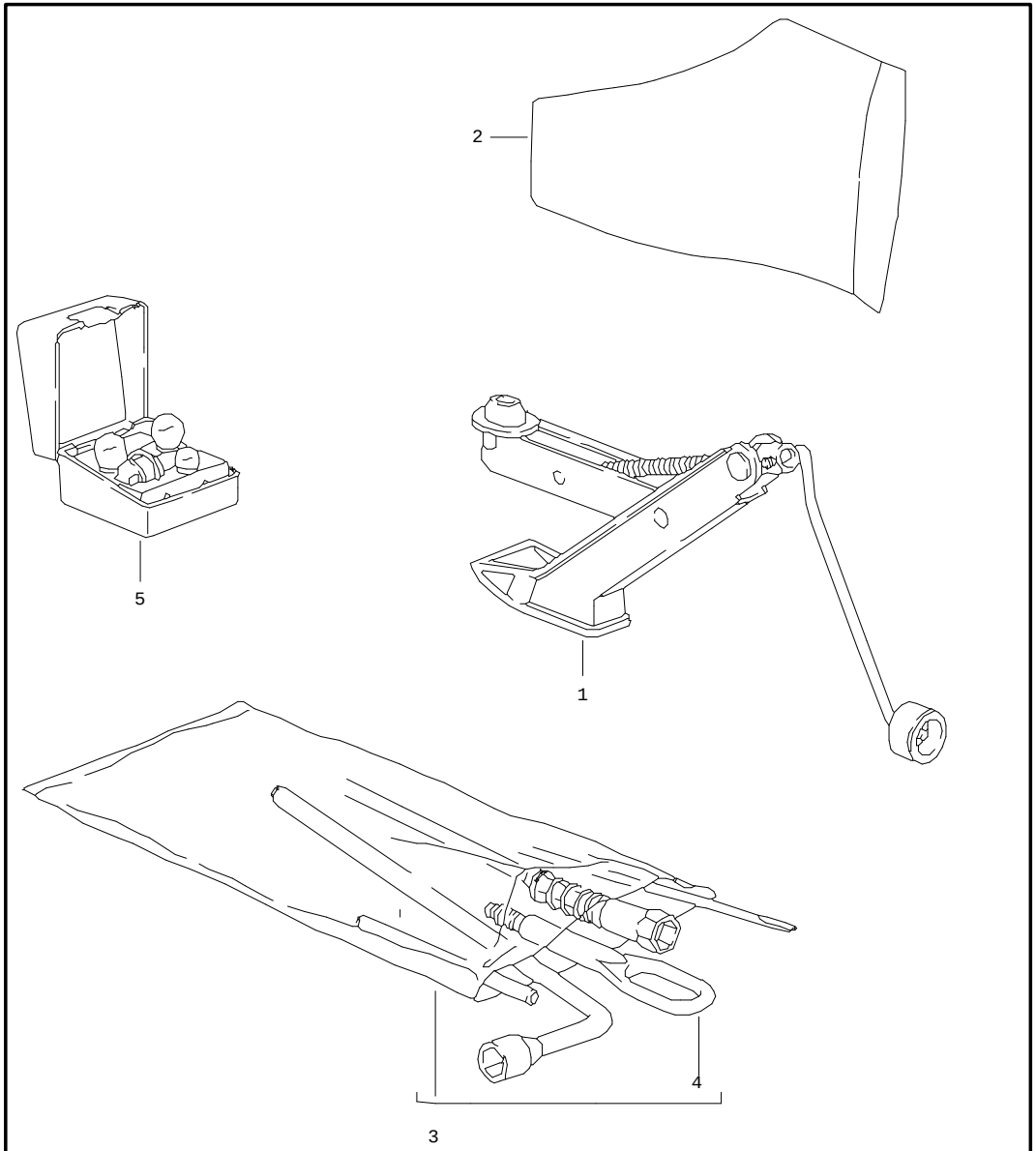

Pos	Part Number	Name	Remarks	Qty	Model
		tool			
1	928 721 011 03	jack		1	
2	928 551 093 02	bag jack		1	
3	E 928 721 005 05	tool	-84	1	
.	___ ___ ___ __	set		.	
(3)	928 721 005 06	tool	85-	1	
.	___ ___ ___ __	set		.	
-	928 721 012 02	spark plug wrench		1	
-	999 571 045 02	rim wrench		1	
-	999 195 011 02	double-end spanner 8 X 9		1	
-	999 195 012 02	double-end spanner 10 X 11		1	
-	999 195 013 02	double-end spanner 12 X 13		1	
-	-	double-end spanner 14 X 15			
-	999 195 015 02	double-end spanner 17 X 19		1	
4	928 722 101 03	towing lug - 15 X 1/8 " -		1	
4	928 722 101 05	towing lug - 20 X 1/8 " -		X	
5	E 928 722 103 02	box with bulbs		1	
(5)	E 928 722 103 04	box with bulbs		1	(F)
(5)	E 928 722 103 05	box with bulbs		1	(J)
-	928 701 015 02	support number plate set		1	
-	928 701 017 02	support number plate set		1	(I),(B),(L) (A),(AUS) (SF)

Model	Year	MG	SG	Illustration	Restrictions	Update			
928	86	0	01	1-00		179	14:06	01.09.2004	PORSCHE PET PORSCHE

Pos	Part Number	Name	Remarks	Qty	Model	Pos	Part Number	Name	Remarks	Qty	Model
		- -- E N D -- -									

Model	Year	MG	SG	Illustration	Restrictions	Update		
928	86	0	01	1-05		179	14:06	01.09.2004

Pos	Part Number	Name	Remarks	Qty	Model
		stickers			
-	928 006 101 14	sticker engine specifications	-83	1	(S)
-	928 006 101 39	sticker engine specifications	84-	1	(S)
-	928 006 119 00	sticker engine specifications	-83	1	(CH)
-	928 006 119 01	sticker engine specifications	84-	1	(CH)
-	928 006 101 38	sticker engine specifications	84-	1	(AUS)
-	928 006 101 35	sticker engine specifications		1	(J)
-	928 006 109 00	sticker toothed belt		1	
-	411 000 263 A	sticker octane number		1	
-	477 000 258	sticker unleaded		1	(J)
-	928 006 505 00	sticker tyre pressure		1	
-	928 006 516 00	sticker tyre pressure		1	(AUS)
-	928 701 157 03	sticker emergency wheel		1	
-	928 006 901 00	sticker trailer coupling		1	
-	928 006 103 01	sticker ignition point		1	
-	964 701 163 00	sticker high voltage		1	
-	911 006 541 00	sticker brake fluid	-83	1	
		- -- E N D -- -			

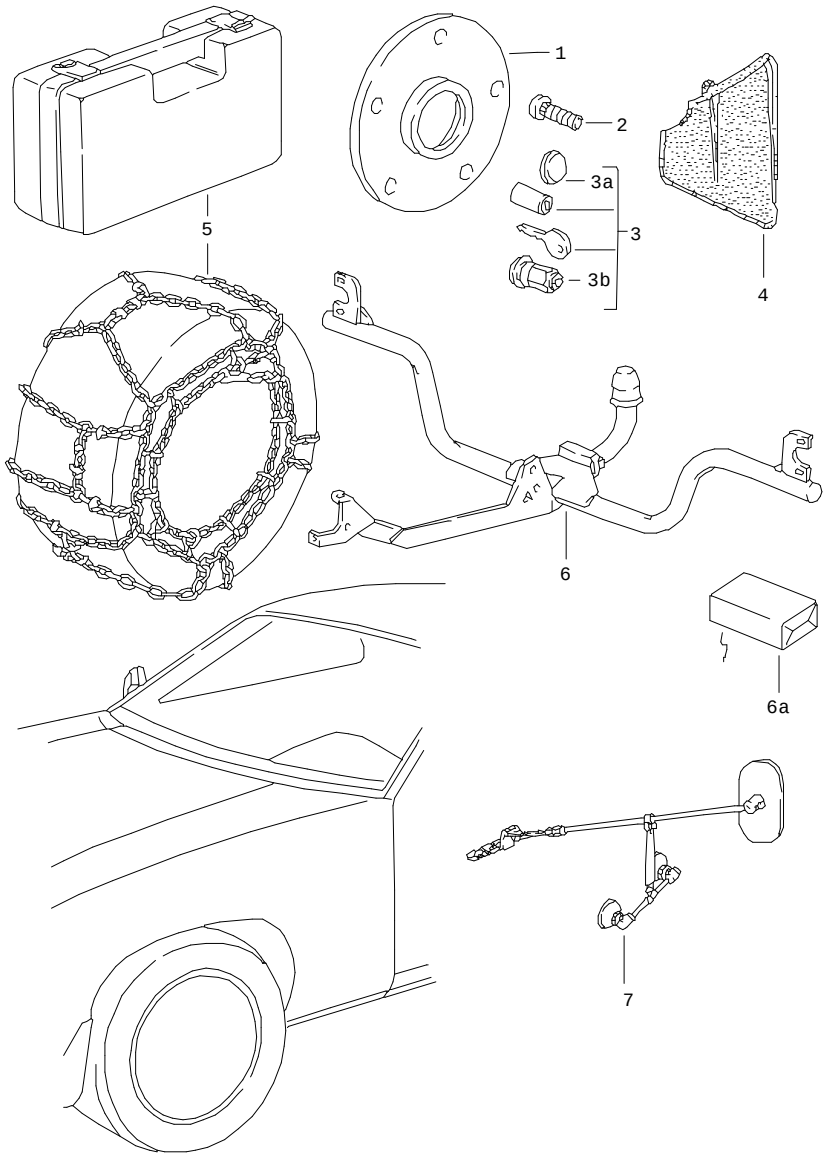

Pos	Part Number	Name	Remarks	Qty	Model
		accessories			
		widening of track for rear axle see technical information group 928 X 5			
1	477 501 701	spacer tube 21 MM		2	
2	901 331 671 01	wheel bolt		10	
3	928 361 047 03	wheel nut 1 set lockable		1	
3A	965 361 167 00	cap wheel nut		X	
3B	928 361 306 01	wheel nut lockable without lock		4	
4	928 559 901 02	mud flap set comprising:		1	
-	928 559 383 02	mud flap	/L	1	
-	928 559 384 02	mud flap	/R	1	
-	928 559 385 02	desk pad		2	
-	N 010 264 4	hexagon-head bolt M 5 X 20		2	
-	900 910 008 02	lock nut M 5		3	
-	928 559 386 02	bracket		1	
-	928 559 389 02	clamp		5	
		snow chains			
5	911 361 909 00	snow chains 1 set for tyre 185/70 R 15 215/60 R 15 205/55 R 16		1	

Pos	Part Number	Name	Remarks	Qty	Model
5	911 361 909 00	snow chains for tyre 225/50 R 16		1	
6	E 928 722 031 02	trailer coupling		1	
6A	928 612 905 00	electric installation set trailer coupling	-84	1	
6A	E 928 612 905 01	electric installation set trailer coupling	85-	1	
7	E 928 731 051 02	outside mirror for caravan	/L	1	
(7)	E 928 731 052 02	outside mirror for caravan	/R	1	
-	911 361 510 03	small electric compressor small compressor		1	
-	911 722 201 02	tyre pressure gauge		1	
		vertical pedal adjustment see group 7/02/00 7/02/05			
		floor mat see group 8/07/05			
		- -- E N D -- -			

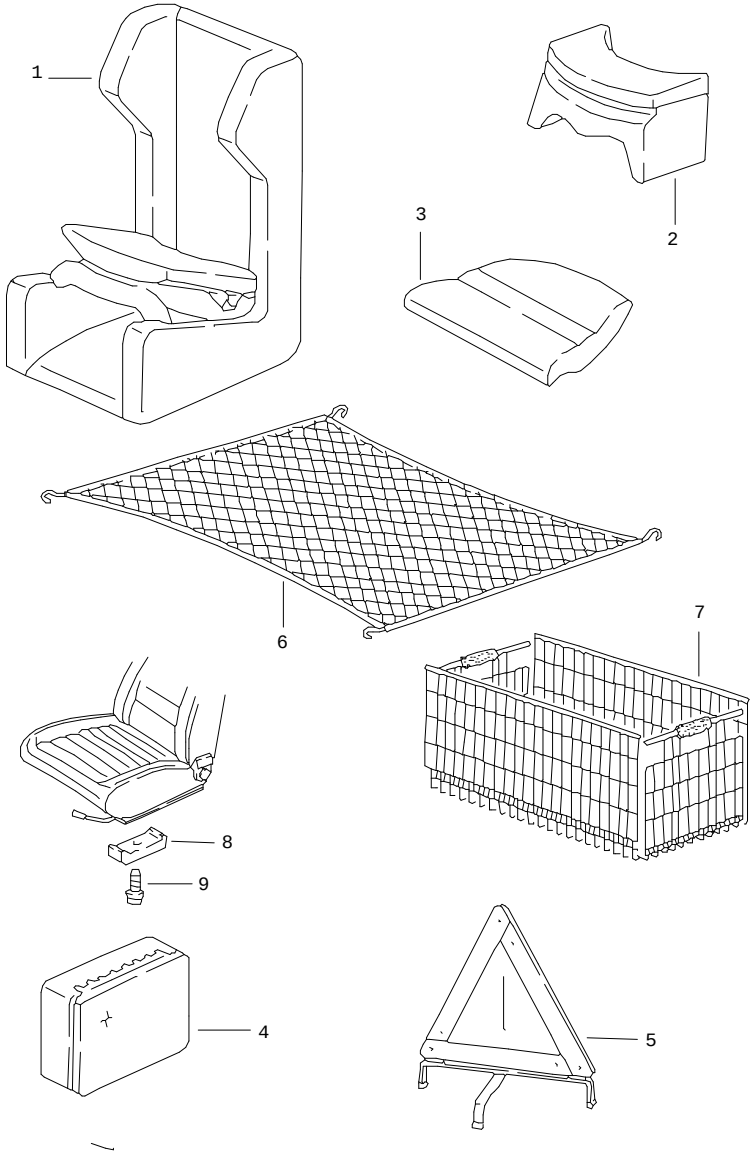

Pos	Part Number	Name	Remarks	Qty	Model
		accessories			
1	944 522 051 00	child car seat up to 4 years		1	
2	928 522 050 00	child car seat older than 4 years only together with child car seat cushion		1	
3	928 522 159 02	child car seat cushion	/L	1	
(3)	928 522 160 02	child car seat cushion	/R	1	
	4CR	black logo porsche			
6	E 928 555 631 02	luggage net		1	
7	E 000 043 002 00	car basket to be folded		X	
		vertical seat adjustment			
8	911 521 493 00	spacer 13 MM	-84	X	
9	900 067 089 02	pan-head screw M 6 X 25 elevation 13 MM	-84	X	
(9)	N 014 749 2	pan-head screw M 6 X 40 elevation 26 MM	-84	X	
		- -- E N D -- -			

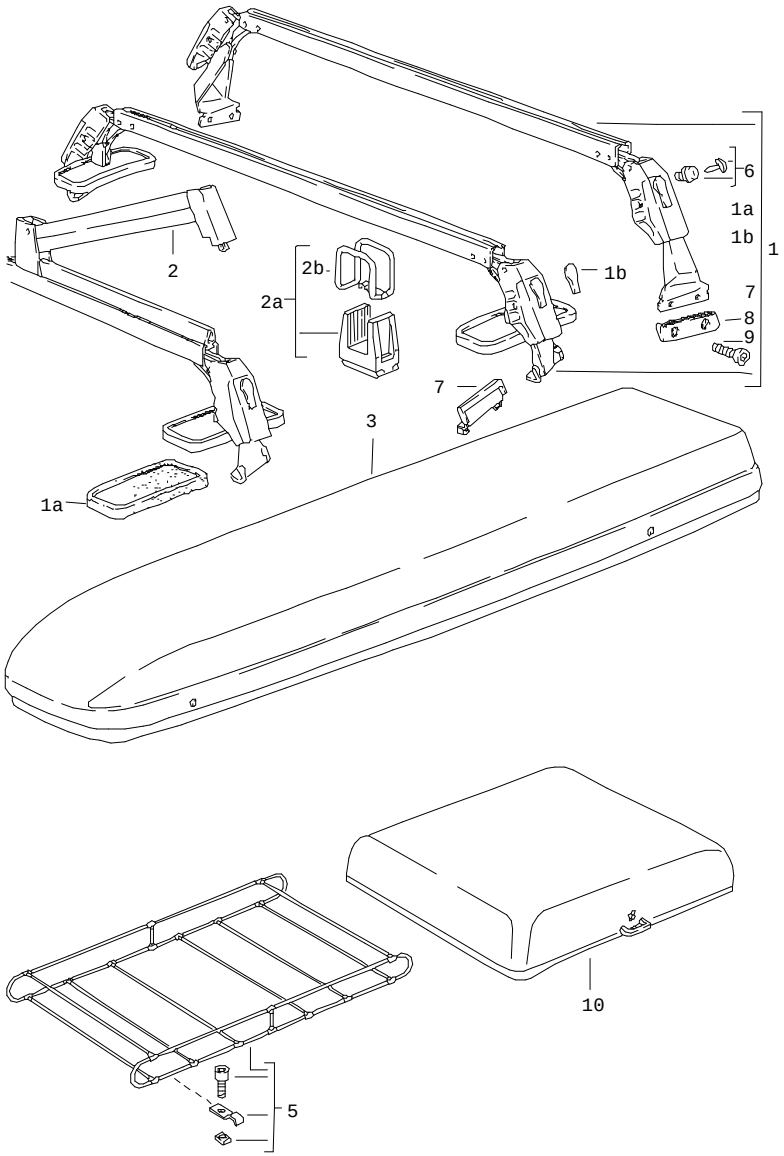

Pos	Part Number	Name	Remarks	Qty	Model
		roof transport system			
1	928 801 055 02	set of main supports		1	
1A	E 928 801 267 02	rubber plate		2	
1B	928 801 111 02	protection cap lock		4	
2	E 928 801 061 02	retaining strip set pieces		1 4	
2A	E 928 801 903 02	rubber support for skis pieces		1 2	
2B	E 928 801 193 02	retaining strap pieces		1 2	
3	E 928 801 063 02	ski box	/L	1	
(3)	E 928 801 064 02	ski box	/R	1	
5	E 928 801 081 02	roof rack set		1	
6	928 801 011 02	cylinder lock spring clamp key state lock number		4 1 2	
7	E 928 801 271 02	protective rubber		2	
8	E 928 801 167 02	protective rubber		2	
9	900 119 072 00	pan-head screw M 8 X 18		4	
10	E 928 801 073 02	box for suitcase		1	
		- -- E N D -- -			

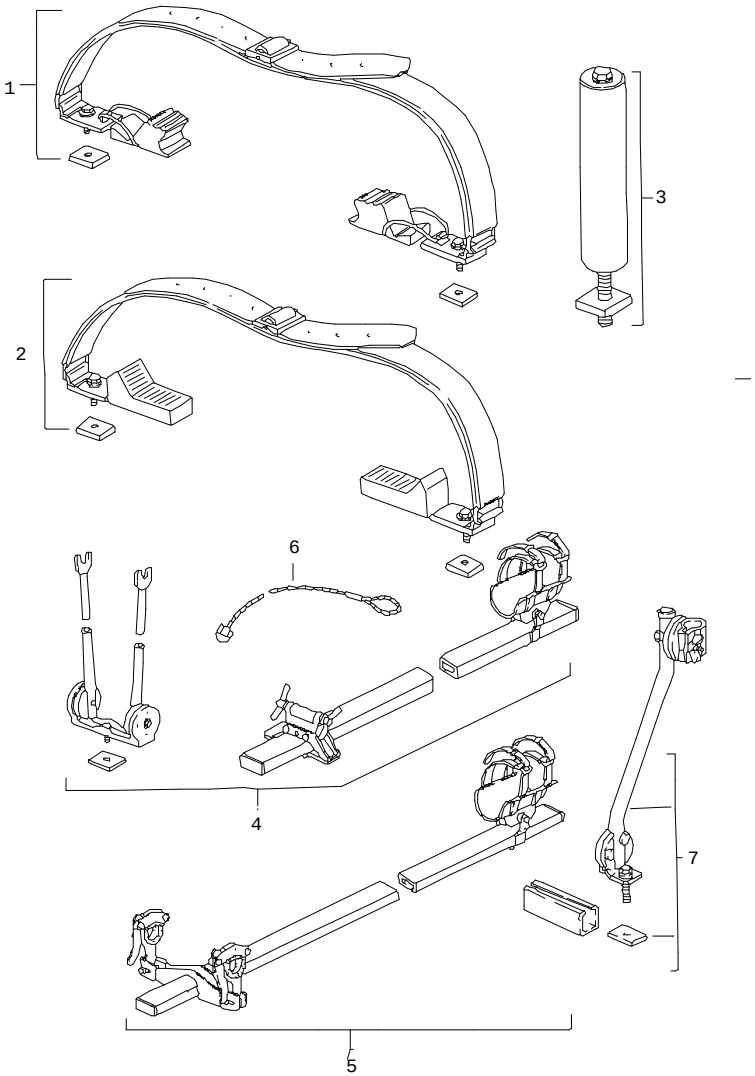

Pos	Part Number	Name	Remarks	Qty	Model
		roof transport system			
1	E 928 801 019 02	set of surf board supports		1	
2	E 928 801 017 02	set - canoe carrier		1	
3	E 928 801 085 02	ladder support mandrel set pieces		1 4	
4	E 928 801 093 02	set - bike carrier racing bike		1	
5	E 928 801 095 02	set - bike carrier standard bike		1	
6	E 928 801 079 02	safety rope anti-theft protection		1	
7	E 928 801 097 02	support for bicycle		1	
		- -- E N D -- -			

Model	Year	MG	SG	Illustration	Restrictions	Update	14:08	01.09.2004	PORSCHE	PET	PORSCHE
928	86	0	03	3-00		179					

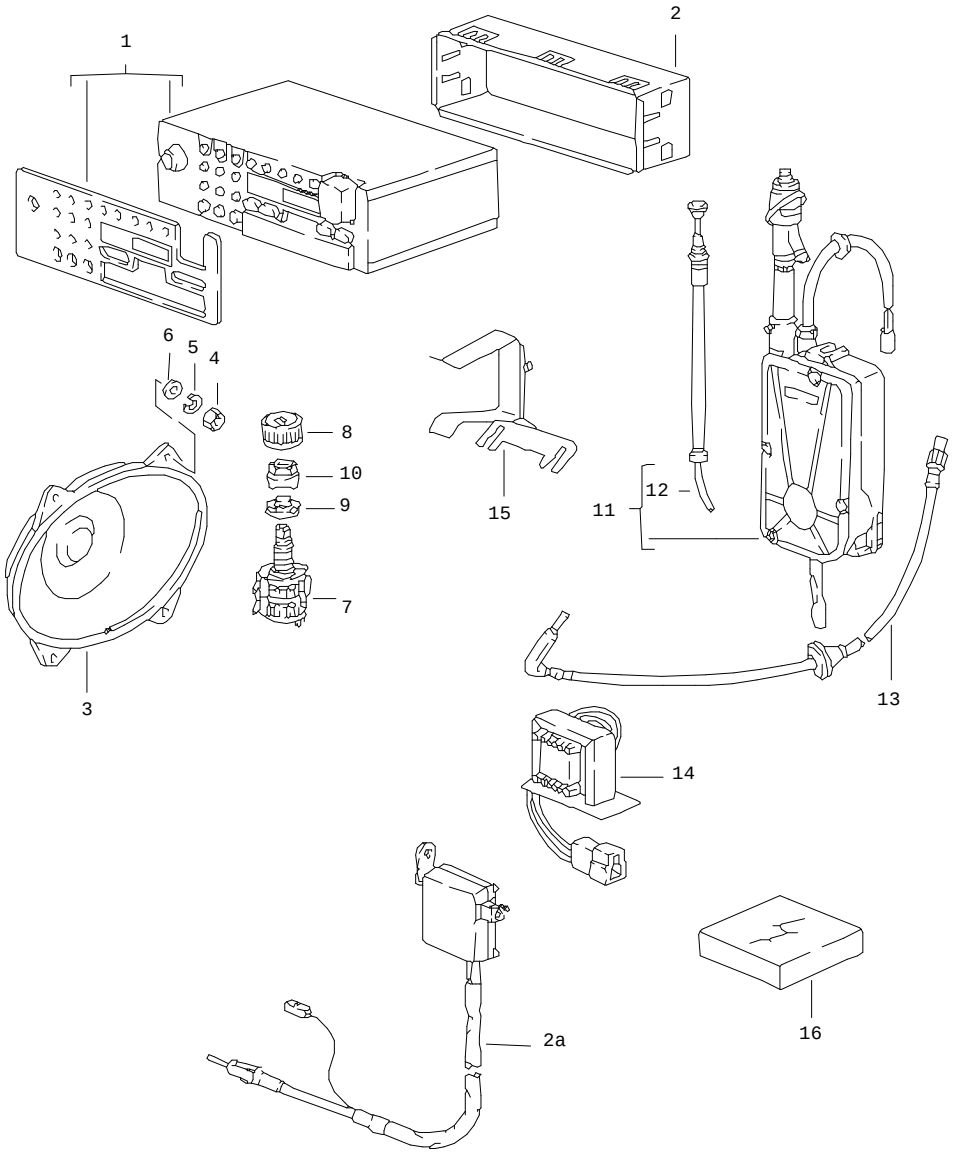

Pos	Part Number	Name	Remarks	Qty	Model
		radio installation parts			
(1)	> 911 645 106 00	radio KOELN ARIMAT	-83	1	
(1)	E 911 645 106 01	radio KOELN SQR 23	84-	1	
(1)	E 911 645 139 00	radio ATLANTA	-83	1	
(1)	E 911 645 139 00	radio ATLANTA SQR 23	84-	1	
-	> 911 645 157 00	radio HAMBURG SQM 24	85-	1	
-	E 911 645 158 00	radio BOSTON SQR 23	85-	1	
-	E 911 645 159 00	radio BREMEN SQR 45	86-	1	(D)(A)(CH)
-	E 911 645 139 00	radio TORONTO SQR 45 w/o motorist radio inform.	86-	1	
-	E 911 645 158 00	radio BOSTON SQM 23 w/o motorist radio inform.	86-	1	
2	911 645 173 02	retaining frame		1	
2A	928 645 173 02	antenna booster	85-	1	
-	941 645 183 00	extension cable	85-	1	
3	E 928 645 402 00	loudspeaker front 4 OHM 15 WATT		2	
(3)	928 645 403 00	loudspeaker rear 4 OHM 25 WATT		2	
4	N 011 004 6	hexagon nut M 4		16	
5	900 027 011 01	lock ring B 4		16	
6	900 151 001 02	washer A 4,3		16	

Pos	Part Number	Name	Remarks	Qty	Model
7	A 928 645 153 00	fader		1	
(7)	928 645 153 00	fader		1	
8	928 645 154 01	rotary knob		1	
9	928 645 161 00	rose		1	
10	911 645 130 00	nut		1	
11	E 928 645 035 03	automatic antenna		1	
12	477 035 513	antenna rod 928 645 035 01	-84	1	
11	E 928 645 035 03	automatic antenna	-84	1	
12	944 645 913 00	antenna rod 928 645 035 03		1	
13	928 645 031 00	cable		1	
-	928 645 901 01	suppression set		1	
14	999 619 138 00	interference-suppr. choke		1	
15	928 645 011 01	retaining bracket		1	
16	928 645 901 01	suppression set		1	
		- -- E N D -- -			

Pos	Part Number	Name	Remarks	Qty	Model

Model	Year	MG	SG	Illustration	Restrictions	Update				
928	86	0	03	3-01		179	14:09	01.09.2004	PORSCHE	PET	PORSCHE

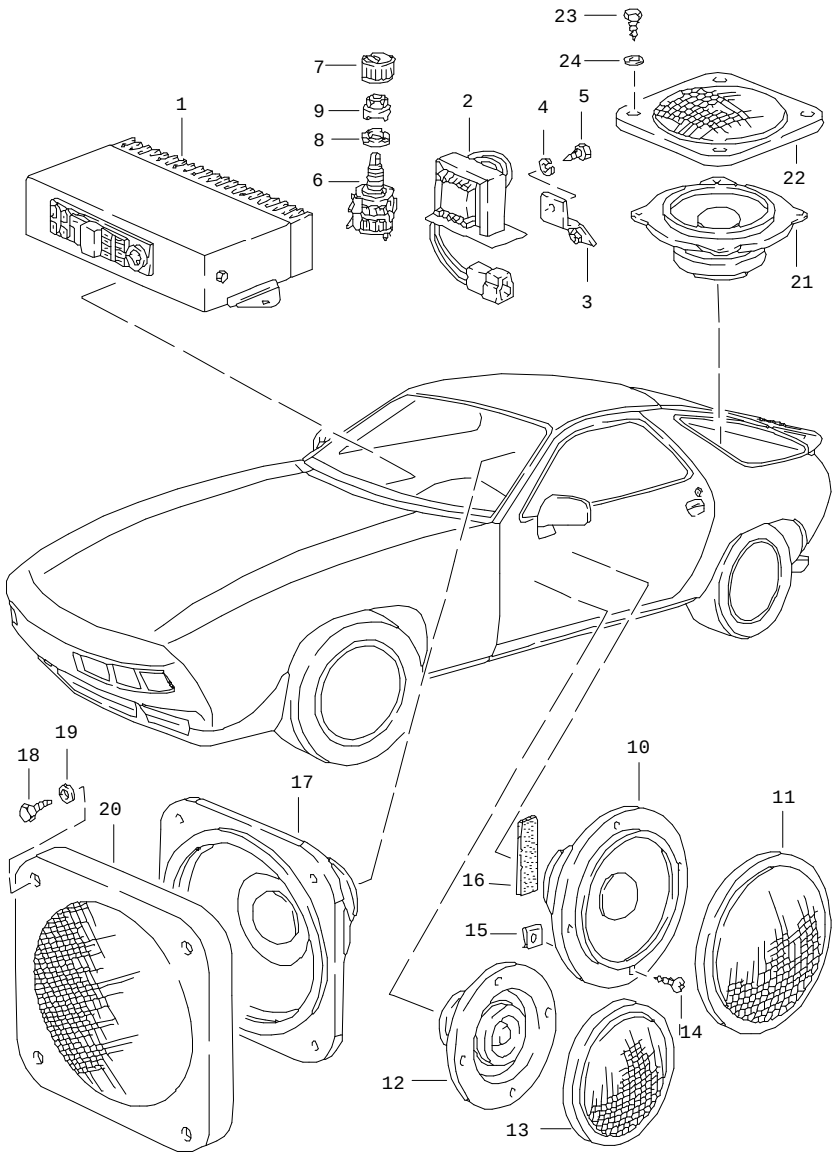

Pos	Part Number	Name	Remarks	Qty	Model
		stereo booster loudspeaker			
1	928 645 405 01	stereo booster		1	
2	999 619 140 00	battery interference choke		1	
3	928 645 077 01	support		1	
4	N 012 222 4	spring washer B 5		2	
5	N 013 968 7	tapping screw 4,8 X 13		2	
6	E 928 645 153 02	fader		1	
7	928 645 154 01	rotary knob		1	
8	928 645 161 00	rose		1	
9	911 645 130 00	nut		1	
10	928 645 428 00	mid-range loudspeaker		2	
11	928 645 430 00	grille		2	
12	928 645 427 00	tweeter heating nozzles		2	
13	928 645 429 00	grille		2	
14	900 143 047 07	tapping screw B 4,2 X 19		16	
15	999 591 583 02	speed nut		16	
16	928 612 494 00	piece of plastic foam		2	
17	928 645 411 02	bass loudspeaker		2	
18	900 143 135 07	tapping screw B 4,2 X 45		8	
19	900 025 049 07	washer A 4,3		8	
20	E 928 645 425 00	cover	/L	1	
(20)	E 928 645 426 00	cover	/R	1	
21	928 645 413 00	mid-range loudspeaker MITTELTON		2	

Pos	Part Number	Name	Remarks	Qty	Model
22	928 645 423 00	loudspeaker grille		2	
23	900 143 121 07	tapping screw B 4,2 X 16		8	
24	900 025 049 07	washer A 4,3		8	
		wiring harness loudspeaker see group 9/02/15			
		- -- E N D -- -			

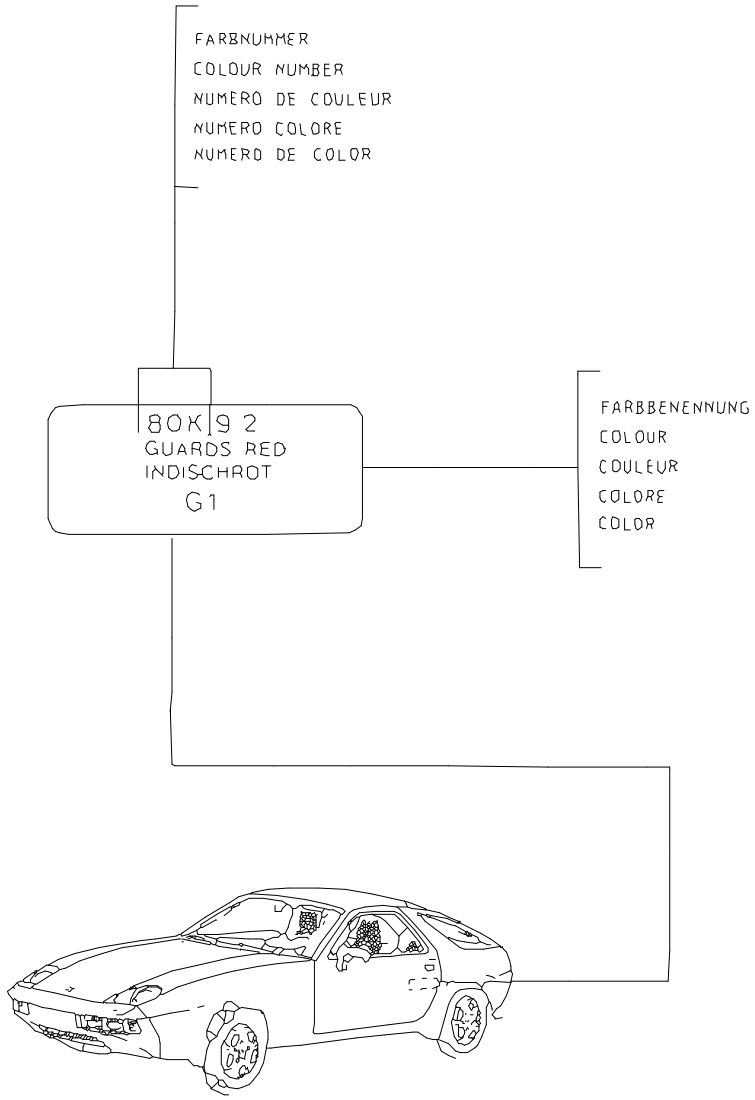

Pos	Part Number	Name	Remarks	Qty	Model
		lacquers basic materials			
-	911 096 050 00	polyester filler 1 KG. GLASSIT-NON-FERRO 839-10		X	
-	911 096 051 00	hardener 30 GR. GLASSIT 948-36 red		X	
-	911 096 052 00	primer filler 1 LTR. GLASSOFIX 238-150		X	
-	911 096 053 00	hardener 500 ML. GLASS0FIX 352-228		X	
-	911 096 054 00	primer filler 1 LTR. GLASSODUR 285-100 white		X	
-	911 096 055 00	hardener 500 ML. GLASSODUR 929-28/1		X	
-	911 096 056 00	wash primer 2 LTR. GLASSOFIX 2K 934-200		X	
-	911 096 057 00	hardener 1 LTR. GLASSOFIX 934-100		X	
-	911 096 058 00	polyurethane plastic putty 1 KG. GLASSODUR 995-20		X	
-	911 096 059 00	hardener 1 KG. GLASSODUR 929-13		X	
-	911 096 060 00	thinner 1 KG. GLASSODUR 352-91		X	
-	911 096 062 00	additional lacquer 1 LTR. GLASSODUR 521-111		X	

Pos	Part Number	Name	Remarks	Qty	Model
-	911 096 063 00	underbody protection 1 KG. GLASSOHYD 1109-		X	
-	E 000 043 001 00	tin SN 90% pieces		X 2	
-	911 095 903 80	synthetic resin prime coat metallic 1 LTR.		X	
	492	nutmeg brown metallic			492
	822	garnet red metallic			822
	33N	crystal green metallic			33N
	33P	iris blue metallic			33P
	33X	prussian blue metallic			33X
	539	white gold metallic			539
	936	silver metallic			936
	961	meteor metallic			961
	20C	moss green metallic			20C
	655	platinum-metallic			655
	661	SCHIEFERBLAU-METALL			661
	662	RAUCHQUARZ-METALLIC			662
	810	ruby red metallic			810
	811	ZIEGELROT-METALLIC			811
	956	zinc metallic			965
	966	light bronze metallic			966
-	911 096 064 00	clear lacquer 1LTR. GLASSODUR-MS 923-85		X	
-	911 095 902 60	top-coat paint 2K ACRYL 1 LTR.		X	
	347	dark blue			347

Pos	Part Number	Name	Remarks	Qty	Model
	673	marble grey			673
	536	pastel beige			536
	027	guards red			027
	182	CHIFFONWEISS			182
	32Z	GLETSCHERBLAU			32Z
	700	black			700
	908	grand prix white			908
-	911 095 932 20	paint touch-up applicator		X	
	027	guards red			027
	182	CHIFFONWEISS			182
	700	black			700
	908	grand prix white			908
	536	pastel beige			536
	673	marble grey			673
	347	dark blue			347
-	911 095 933 20	paint touch-up applicator 1 set comprising: top-coat paint and clear lacquer		X	
	655	platinum-metallic			655
	661	SCHIEFERBLAU-METALLIC			661
	936	silver metallic			936
	539	white gold metallic			539
	492	nutmeg brown metallic			492
	822	garnet red metallic			822
	33P	iris blue metallic			33P
	33X	prussian blue metallic			33X
	33N	crystal green metallic			33N

Pos	Part Number	Name	Remarks	Qty	Model	Pos	Part Number	Name	Remarks	Qty	Model
	20C	moss green metallic			20C						
	961	meteor metallic			961						
	662	RAUCHQUARZ - METALL			662						
	810	ruby red metallic			810						
	811	ZIEGELROT - METALLIC			811						
	956	zinc metallic			956						
	966	light bronze metallic			966						
		- -- E N D -- -									

Model	Year	MG	SG	Illustration	Restrictions	Update		
928	86	0	05	5-00		179	14:09	01.09.2004

Pos	Part Number	Name	Remarks	Qty	Model
		preservative agent sealing compound securing liquid			
		preservative agent			
-	E 999 571 062 00	care kit comprising: suitcase		1	
-	E 999 901 013 40	liquid preservative		X	
-	999 901 014 41	cleaning agents		X	
-	E 999 901 015 40	polisher		X	
-	E 999 901 016 40	tar remover		X	
-	E 999 901 017 40	dashboard cleaner		X	
-	E 999 901 018 40	paint polish		X	
-	999 901 019 41	insect remover		X	
-	E 999 901 020 40	spot remover		X	
-	E 999 901 021 40	polishing cotton		X	
-	E 999 901 022 40	polishing cloth		X	
-	000 044 000 02	preservative agent 250 CCM		X	
-	999 917 803 00	window cleaner		X	
-	928 628 931 00	silicone remover		X	
		sealing compound			
-	000 043 010 00	loctite -574- sealing compound-surfaces 50 CCM		X	
		securing liquid			
-	928 101 921 00	loctite -270- 10 CCM high strength		X	
-	000 043 012 00	loctite -221- low strength 10 CCM		X	
		- -- E N D -- -			

Model	Year	MG	SG	Illustration	Restrictions	Update		
928	86	0	06	6-00		179	14:10	01.09.2004

Pos	Part Number	Name	Remarks	Qty	Model
		adhesive			
		lubricants			
		adhesive			
		adhesive set -LOCTITE- for pasting metal glass ceramics		X	
-	000 043 051 00	adhesive -312- 50 CCM		X	
-	000 043 202 65	loctite - AKTIVATOR NF 736 - 180 CCM		X	
-	E 000 043 013 00	loctite -80646- 311 GR.		X	
-	911 096 240 25	polyurethane adhesive adhesive 500 GR. hardener 500 GR.		X	
		lubricants			
-	000 043 004 00	mounting paste optimoly ht 90 GR.		X	
-	000 043 020 00	optimoly - TA - mounting paste		X	
-	000 043 005 00	grease for drive shaft optimoly 90 GR.		X	
-	000 043 024 00	extreme-pressure grease -OPTIMOL OLISTA- LONGTIME 3EP extreme-pressure grease 80 GR.		X	
-	000 043 204 21	grease for lock cylinder spraying can		X	
		- -- E N D -- -			

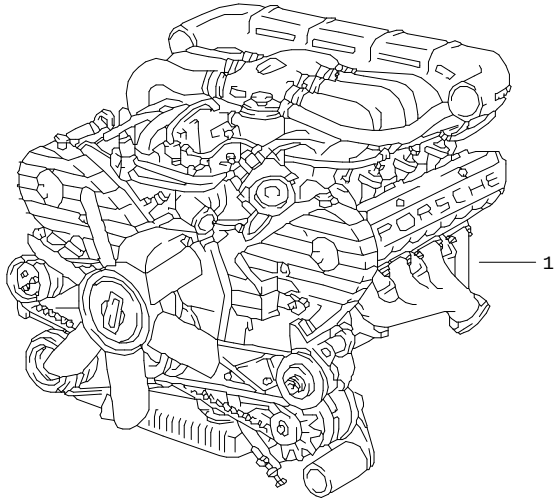

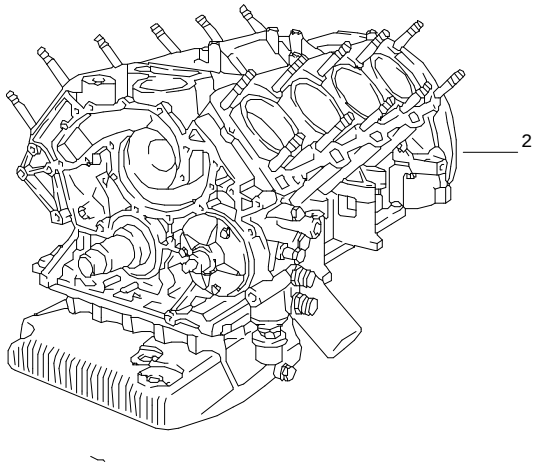

Pos	Part Number	Name	Remarks	Qty	Model
		replacement engine			
(1)	A 928 100 940 21	replacement engine	85-	1	M28.21
(1)	A 928 100 940 22	replacement engine	85-	1	M28.22
(1)	A 928 100 911 08	short engine	85-	1	M28.43
		short engine with crankshaft piston oil pump oil pan			
(2)	> 928 100 911 04	short engine	-83	1	M28.11/12
(2)	928 100 911 05	short engine	-84	1	M28.19/20
(2)	928 100 911 05	short engine	-84	1	M28.20 (J)
(2)	> 928 100 911 06	short engine	84	1	M28.21/22
(2)	> 928 100 911 07	short engine	85-	1	M28.21/22
(2)	928 100 911 09	short engine		1	M28.21/22 (S/CH/AUS)
(2)	928 100 911 08	short engine	85-	1	M28.43/44
(2)	> 928 100 911 10	short engine	86	1	M28.45/46
(2)	> 928 100 911 10	short engine	86	1	M28.45/46
		- -- E N D -- -			

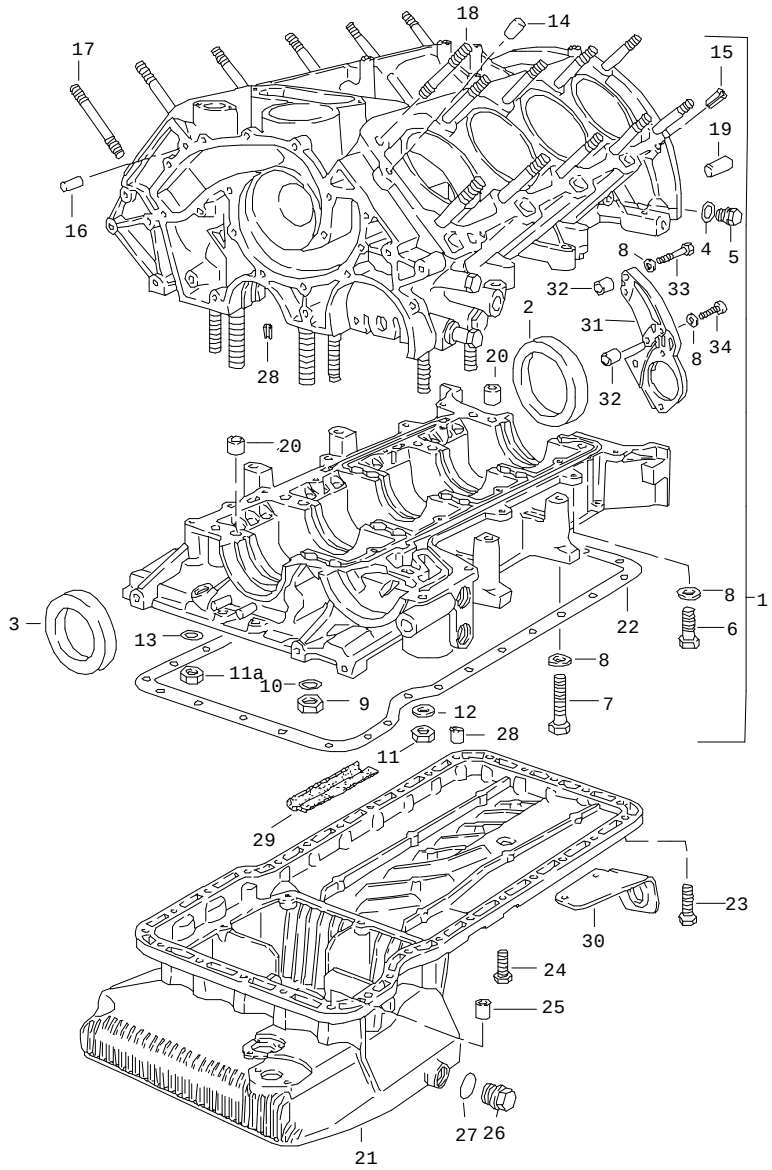

Pos	Part Number	Name	Remarks	Qty	Model
		crankcase			
1	> 928 101 907 02	crankcase with pistons	-83	1	M28.11/12
1	> 928 101 907 03	crankcase with pistons	84	1	M28.21/22
1	> 928 101 907 04	crankcase with pistons	85-	1	M28.21/22
1	928 101 907 05	crankcase with pistons	85-	1	M28.21/22 (S/CH/AUS)
1	928 101 908 02	crankcase with pistons	-84	1	M28.19/20 (J)
1	E 928 101 908 03	crankcase with pistons	85-	1	M28.43/44 (J)
1	E 928 101 908 04	crankcase with pistons	86	1	M28.45/46
2	999 113 264 40	radial sealing ring 90 X 110 X 12		1	
3	* 999 113 263 40	shaft seal 60 X 85 X 10		1	
4	* 900 123 055 30	sealing ring A 12 X 17		2	
5	N 029 703 1	screw plug M 12 X 1,5		2	
6	900 075 099 02	hexagon-head bolt M 8 X 30		6	
7	N 010 361 4	hexagon-head bolt M 8 X 65		10	
8	900 025 007 02	washer A 8,4		24	
9	928 101 742 00	hexagon nut M 12 X 1,5		10	
10	928 101 301 02	washer		10	
11	N 011 010 13	hexagon nut M 10		22	
11A	928 101 741 00	hexagon nut M 10		10	

Pos	Part Number	Name	Remarks	Qty	Model
12	900 025 008 09	washer A 10,5		2	
13	928 101 303 00	washer		10	
14	999 012 034 00	straight pin 8 X 12	-83	4	
14	999 012 034 00	straight pin 8 M 6 X 12	84-	4	
15	900 095 072 01	tensioning sleeve 6 X 12		2	
16	N 013 199 1	straight pin 6 X 12		2	
17	928 101 187 06	stud 193 MM		18	
18	928 101 186 04	stud 142 MM		2	
19	900 012 070 00	straight pin 12 X 18		2	
20	928 101 195 03	fitting bushing		1	
21	A 928 101 208 00	oil pan		1	
(21)	928 101 208 00	oil pan		1	
22	* 928 101 207 00	oil sump gasket		1	
23	900 075 347 02	screw M 6 X 28 Z1		25	
24	900 075 341 02	screw M 6 X 25 Z1		5	
25	928 101 189 00	dowel sleeve		2	
26	944 107 197 01	screw plug		1	
27	* 900 123 118 30	sealing ring A 22 X 27		1	
28	N 013 315 1	roll pin 5 X 10		1	
29	928 604 121 00	insulating piece		1	
30	928 423 221 01	support		1	
31	928 101 093 01	mounting plate		1	
32	928 101 197 00	fitting bushing		2	
33	N 040 301 1	hexagon-head bolt M 8 X 48		2	
34	900 119 004 02	pan-head screw M 8 X 30		2	

- -- E N D -- -

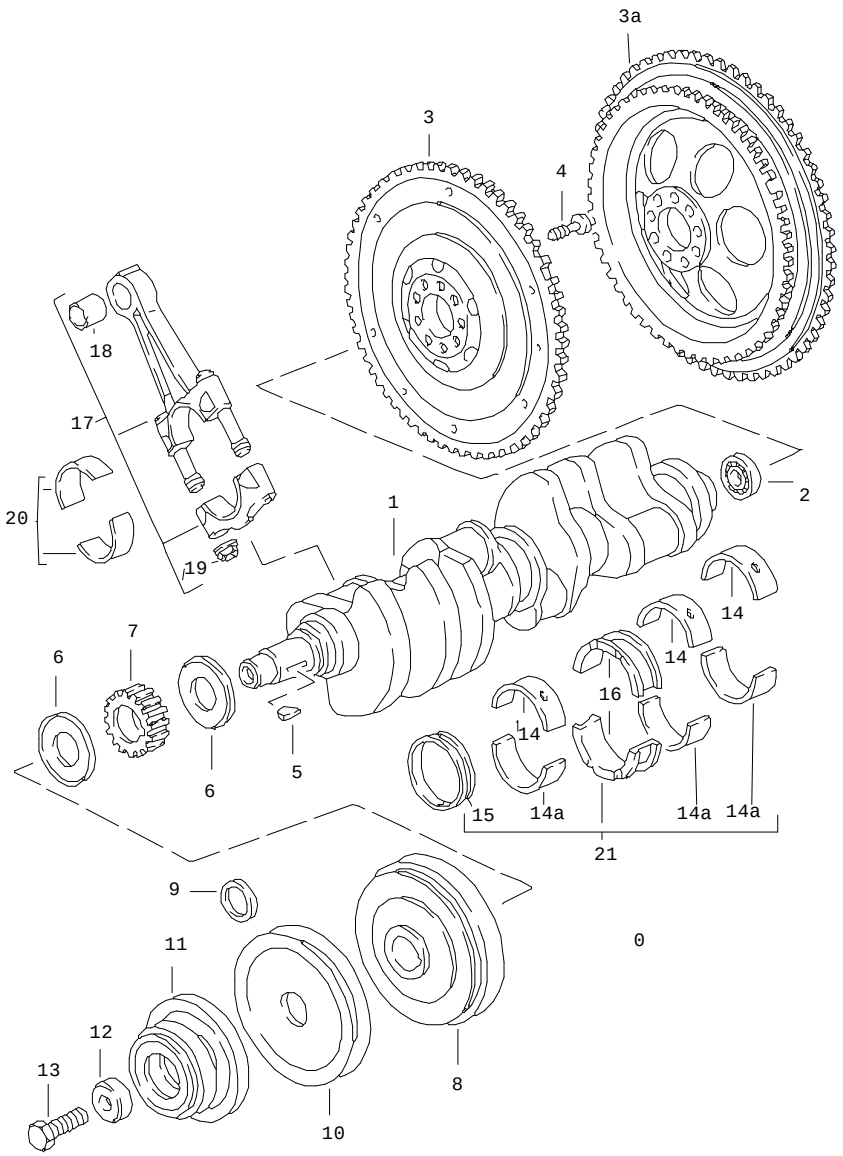

Pos	Part Number	Name	Remarks	Qty	Model
		crankshaft connecting rod see technical information group 1 NR.2/84			
1	928 102 011 25	crankshaft		1	M28.19/20
1	928 102 011 27	crankshaft		1	M28.43/44 M28.45/46
1	> 928 102 011 28	crankshaft		1	M28.11/12 M28.21/22
2	928 102 111 02	deep-groove ball bearing		1	
3	> 928 102 202 10	flywheel	-83	1	M28.11/19
3A	928 102 075 00	flywheel	AUT. -83	1	M28.12/20
3A	928 102 075 01	flywheel		1	M28.22/46
3A	928 102 075 02	flywheel	84-	1	M28.20
3	> 928 102 078 01	flywheel		1	M28.21
3	928 102 078 01	flywheel		1	M28.43/45
3A	928 102 075 01	flywheel	85-	1	M28.44
4	928 102 151 01	pan-head screw		9	
5	900 118 014 00	woodruff key		1	
6	928 102 125 02	flange washer	85-	2	
7	928 105 125 12	gear wheel vibration damper		1	
8	928 102 120 15	vibration damper carmine red	-83	1	M28.11/12
8	928 102 120 16	vibration damper blue green	-83	1	M28.11/12 (AUS)
8	928 102 120 22	vibration damper		1	M28.21/22
8	928 102 120 23	vibration damper orange		1	M28.19/20 M28.43/44 M28.45/46

Pos	Part Number	Name	Remarks	Qty	Model
10	928 102 118 03	v-belt pulley compressor		1	
11	928 102 139 02	pulley	-83	1	M28.11/12
(11)	928 102 139 03	pulley	-83	1	M28.19/20
11	928 102 139 05	pulley	84	1	
(11)	928 102 139 11	pulley	85-	1	M28.21/22
(11)	928 102 139 11	pulley		1	M28.43/44 M28.45/46
12	928 102 124 01	thrust washer		1	
13	900 083 036 02	hexagon-head bolt M 18 X 1,5 X 45		1	
14	* 928 101 115 02	main bearing shell		3	
	002	upper half 2,4,5			
14A	* 928 101 115 03	main bearing shell		3	
	002	lower half 2,4,5			
14	* 928 101 115 50	main bearing shell upper half 2,4,5 undersize 0,25 mm		X	
14A	* 928 101 115 51	main bearing shell lower half 2,4,5 undersize 0,25 mm		X	
14	A 928 101 132 63	main bearing 2,4,5 undersize 0,50 mm		X	
14	* 928 101 115 60	main bearing shell upper half 2,4,5 undersize 0,50 mm		X	
14A	* 928 101 115 61	main bearing shell lower half 2,4,5 undersize 0,50 mm		X	
15	* 928 101 117 08	main bearing bush i		1	
15	* 928 101 117 58	main bearing bush i undersize 0,25 mm		1	
15	928 101 117 60	main bearing bush i undersize 0,50 mm		X	

Pos	Part Number	Name	Remarks	Qty	Model
16	* 928 101 133 03	thrust bearing 3 M >> 82D 00709 M >> 82D 05938 M >> 81E 05343		2	 M28.11 M28.12 M28.20 (J)
16	* 928 101 133 53	thrust bearing 3 undersize 0,25 mm M >> 82D 00709 M >> 82D 05938 M >> 81E 05343		X	 M28.11 M28.12 M28.20 (J)
16	* 928 101 133 63	thrust bearing 3 undersize 0,50 mm M >> 82D 00709 M >> 82D 05938 M >> 81E 05343		X	 M28.11 M28.12 M28.20 (J)
16	* 928 101 142 02	thrust bearing M 82D 00710 >> M 82D 05939 >> M 81E 05344 >> M 82E 00001 >> M 82E 05001 >> M 82D 0710 >> M 82D 5939 >> M 81E 05344 >> M 82E 00001 >> M 82E 05001 >>		2	 M28.11 M28.12 M28.20 (J) M28.21 M28.22 M28.11 M28.12 M28.20 (J) M28.21 M28.22
	002	3			
16	* 928 101 142 54	thrust bearing 3 undersize 0,25 mm M 82D 00710 >> M 82D 05939 >> M 81E 05344 >> M 82E 00001 >> M 82E 05001 >> M 82D 0710 >> M 82D 5939 >> M 81E 05344 >> M 82E 00001 >> M 82E 05001 >>		X	 M28.11 M28.12 M28.20 (J) M28.21 M28.22 M28.11 M28.12 M28.20 (J) M28.21 M28.22

Pos	Part Number	Name	Remarks	Qty	Model
16	* 928 101 142 64	thrust bearing		X	
		3			
		undersize 0,50 mm			
		M 82D 00710 >>			M28.11
		M 82D 05939 >>			M28.12
		M 81E 05344 >>			M28.20 (J)
		M 82E 00001 >>			M28.21
		M 82E 05001 >>			M28.22
		M 82D 0710 >>			M28.11
		M 82D 5939 >>			M28.12
		M 81E 05344 >>			M28.20 (J)
		M 82E 00001 >>			M28.21
		M 82E 05001 >>			M28.22
17	A 928 103 004 00	connecting rod		8	
					M28.19-22
17	928 103 004 00	connecting rod		8	M28.11/12
					M28.19-22
17	A 928 103 019 00	connecting rod		8	M28.43/44
					M28.45/46
17	928 103 004 01	connecting rod		8	M28.43/44
					M28.45/46
					M28.45/46
18	928 103 133 00	piston pin bush		8	
19	928 103 172 02	connecting rod nut		16	
20	928 103 143 02	bearing shell		16	
20	928 103 143 52	bearing shell		X	
		oversize 0,25 mm			
20	928 103 143 57	bearing shell		X	
		oversize 0,50 mm			
21	* 928 101 901 02	set of crankshaft bearings		1	
		M >> 82D 00709			M28.11
		M >> 82D 05938			M28.12
		M >> 81E 05343			M28.20 (J)
21	* 928 101 901 52	set of crankshaft bearings		1	
		undersize 0,25 mm			
		M >> 82D 00709			M28.11
		M >> 82D 05938			M28.12
		M >> 81E 05343			M28.20 (J)
21	* 928 101 901 62	set of crankshaft bearings		1	
		undersize 0,50 mm			
		A			
		M >> 82D 00709			M28.11
		M >> 82D 05938			M28.12
		M >> 81E 05343			M28.20 (J)
		M >> 82D 00709			M28.11
		M >> 82D 05938			M28.12
		M >> 81E 05343			M28.20 (J)
21	* 928 101 901 07	set of crankshaft bearings		1	
		M 82D 00710 >>			M28.11
		M 82D 05939 >>			M28.12
		M 81E 05344 >>			M28.20 (J)
		M 82E 00001 >>			M28.21
		M 82E 05001 >>			M28.22
		M 82D 0710 >>			M28.11
		M 82D 5939 >>			M28.12
		M 81E 05344 >>			M28.20 (J)
		M 82E 00001 >>			M28.21
		M 82E 05001 >>			M28.22
21	* 928 101 901 57	set of crankshaft bearings		1	
		undersize 0,25 mm			
		M 82D 00710 >>			M28.11
		M 82D 05939 >>			M28.12
		M 81E 05344 >>			M28.20 (J)
		M 82E 00001 >>			M28.21
		M 82E 05001 >>			M28.22
		M 82D 0710 >>			M28.11
		M 82D 5939 >>			M28.12
		M 81E 05344 >>			M28.20 (J)
		M 82E 00001 >>			M28.21
		M 82E 05001 >>			M28.22
21	* 928 101 901 67	set of crankshaft bearings		1	
		undersize 0,50 mm			
		M 82D 00710 >>			M28.11
		M 82D 05939 >>			M28.12
		M 81E 05344 >>			M28.20 (J)
		M 82E 00001 >>			M28.21
		M 82E 05001 >>			M28.22
		M 82D 0710 >>			M28.11
		M 82D 5939 >>			M28.12
		M 81E 05344 >>			M28.20 (J)
		M 82E 00001 >>			M28.21
		M 82E 05001 >>			M28.22

- -- E N D -- -

Model	Year	MG	SG	Illustration	Restrictions	Update				
928	86	1	02	102-05		179	14:11	01.09.2004	PORSCHE	PET	PORSCHE

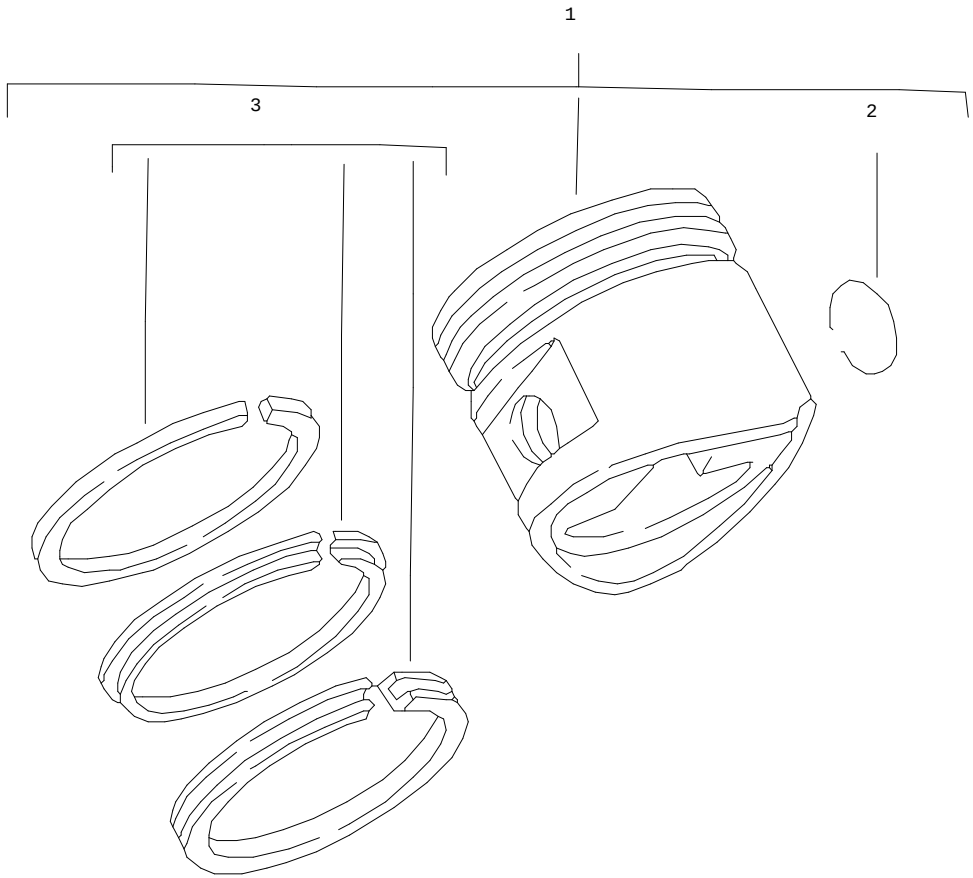

Pos	Part Number	Name	Remarks	Qty	Model
		piston piston rings			
1	928 103 093 00	piston - KS - 97,00 MM tolerance group 0		8	M28.19/20
(1)	928 103 093 10	piston - KS - 97,00 MM tolerance group 1		X	M28.19/20
(1)	928 103 093 20	piston - KS - 97,00 MM tolerance group 2		X	M28.19/20
(1)	928 103 093 50	piston - KS - 97,50 MM tolerance group 0		X	M28.19/20
(1)	E 928 103 093 60	piston - KS - 97,50 MM tolerance group 1		X	M28.19/20
(1)	928 103 093 70	piston - KS - 97,50 MM tolerance group 2		X	M28.19/20
(1)	E 928 103 093 55	piston - KS - 98,00 MM tolerance group 0		X	M28.19/20
(1)	E 928 103 093 65	piston - KS - 98,00 MM tolerance group 1		X	M28.19/20
(1)	E 928 103 093 75	piston - KS - 98,00 MM tolerance group 2		X	M28.19/20

Pos	Part Number	Name	Remarks	Qty	Model
(1)	E 928 103 086 00	piston MAHLE 97,00 MM tolerance group 0 M >> 82E 0596 M >> 82E 6113		8	M28.11/12 M28.21/22 M28.21 M28.22
(1)	928 103 086 10	piston MAHLE 97,00 MM tolerance group 1 M >> 82E 0596 M >> 82E 6113		X	M28.11/12 M28.21/22 M28.21 M28.22
(1)	928 103 086 20	piston MAHLE 97,00 MM tolerance group 2 M >> 82E 0596 M >> 82E 6113		X	M28.11/12 M28.21/22 M28.21 M28.22
(1)	928 103 086 50	piston MAHLE 97,50 MM tolerance group 0 M >> 82E 0596 M >> 82E 6113		X	M28.11/12 M28.21/22 M28.21 M28.22
(1)	928 103 086 60	piston MAHLE 97,50 MM tolerance group 1 M >> 82E 0596 M >> 82E 6113		X	M28.11/12 M28.21/22 M28.21 M28.22
(1)	928 103 086 70	piston MAHLE 97,50 tolerance group 2 M >> 82E 0596 M >> 82E 6113		X	M28.11/12 M28.21/22 M28.21 M28.22
(1)	928 103 086 55	piston MAHLE 98,00 MM tolerance group 0 M >> 82E 0596 M >> 82E 6113		X	M28.11/12 M28.21/22 M28.21 M28.22
(1)	928 103 086 65	piston MAHLE 98,00 MM tolerance group 1 M >> 82E 0596 M >> 82E 6113		X	M28.11/12 M28.21/22 M28.21 M28.22
(1)	928 103 086 75	piston MAHLE 98,00 MM tolerance group 2 M >> 82E 0596 M >> 82E 6113		X	M28.11/12 M28.21/22 M28.21 M28.22
(1)	928 103 086 04	piston MAHLE 97,00 MM tolerance group 0 M 82E 0597 >> M 82E 6114 >>		8	M28.21/22 M28.21 M28.22
(1)	928 103 086 14	piston MAHLE 97,00 MM tolerance group 1 M 82E 0597 >> M 82E 6114 >>		X	M28.21/22 M28.21 M28.22
(1)	928 103 086 24	piston MAHLE 97,00 MM tolerance group 2 M 82E 0597 >> M 82E 6114 >>		X	M28.21/22 M28.21 M28.22
(1)	928 103 086 52	piston MAHLE 97,50 MM tolerance group 0 M 82E 0597 >> M 82E 6114 >>		X	M28.21/22 M28.21 M28.22

Pos	Part Number	Name	Remarks	Qty	Model
(1)	928 103 086 62	piston MAHLE 97,50 MM tolerance group 1 M 82E 0597 >> M 82E 6114 >>		X	M28.21/22 M28.21 M28.22
(1)	928 103 086 72	piston MAHLE 97,50 MM tolerance group 2 M 82E 0597 >> M 82E 6114 >>		X	M28.21/22 M28.21 M28.22
(1)	E 928 103 086 57	piston MAHLE 98,00 MM tolerance group 0 M 82E 0597 >> M 82E 6114 >>		X	M28.21/22 M28.21 M28.22
(1)	E 928 103 086 67	piston MAHLE 98,00 MM tolerance group 1 M 82E 0597 >> M 82E 6114 >>		X	M28.21/22 M28.21 M28.22
(1)	E 928 103 086 77	piston MAHLE 98,00 MM tolerance group 2 M 82E 0597 >> M 82E 6114 >>		X	M28.21/22 M28.21 M28.22
(1)	928 103 093 02	piston - KS - 97,00 MM tolerance group 0	85-	8	M28.21/22 M 151
(1)	928 103 093 12	piston - KS - 97,00 MM tolerance group 1	85-	8	M28.21/22 M 151
(1)	928 103 093 22	piston - KS - 97,00 MM tolerance group 2	85-	8	M28.21/22 M 151
(1)	E 928 103 093 52	piston - KS - 97,50 MM tolerance group 0	85-	X	M28.21/22 M 151
(1)	E 928 103 093 62	piston - KS - 97,50 MM tolerance group 1	85-	X	M28.21/22 M 151
(1)	E 928 103 093 72	piston - KS - 97,50 MM tolerance group 2	85-	X	M28.21/22 M 151
2	N 012 277 1	snap ring		16	
3	* 928 103 906 11	set of piston rings 97,00 MM		1	
3	* 928 103 906 12	set of piston rings 97,50 MM		1	
3	* 928 103 906 03	set of piston rings 98,00 MM		1	
(1)	928 103 065 02	piston - KS - 100,00 MM tolerance group 0		8	M28.43/44
(1)	928 103 065 12	piston - KS - 100,00 MM tolerance group 1		X	M28.43/44
(1)	928 103 065 22	piston - KS - 100,00 MM tolerance group 2		X	M28.43/44
(1)	E 928 103 065 53	piston - KS - 100,50 MM tolerance group 0		X	M28.43/44
(1)	928 103 065 62	piston - KS - 100,50 MM tolerance group 1		X	M28.43/44
(1)	928 103 065 72	piston - KS - 100,50 MM tolerance group 2		X	M28.43/44

Pos	Part Number	Name	Remarks	Qty	Model
(1)	928 103 065 05	piston - KS - 100,00 MM tolerance group 0	86	8	M28.45/46
(1)	928 103 065 15	piston - KS - 100,00 MM tolerance group 1	86	8	M28.45/46
(1)	928 103 065 25	piston - KS - 100,00 MM tolerance group 2	86	8	M28.45/46
(1)	E 928 103 065 55	piston - KS - 100,50 MM tolerance group 0	86	X	M28.45/46
(1)	928 103 065 65	piston - KS - 100,50 MM tolerance group 1	86	X	M28.45/46
(1)	928 103 065 75	piston - KS - 100,50 MM tolerance group 2	86	X	M28.45/46
2	N 012 277 1	snap ring		16	
3	* 928 103 906 04	set of piston rings 100,00 MM		1	M28.43/44 M28.45/46
3	* 928 103 906 05	set of piston rings 100,50 MM		1	M28.43/44 M28.45/46 M28.45/46
		- -- E N D -- -			

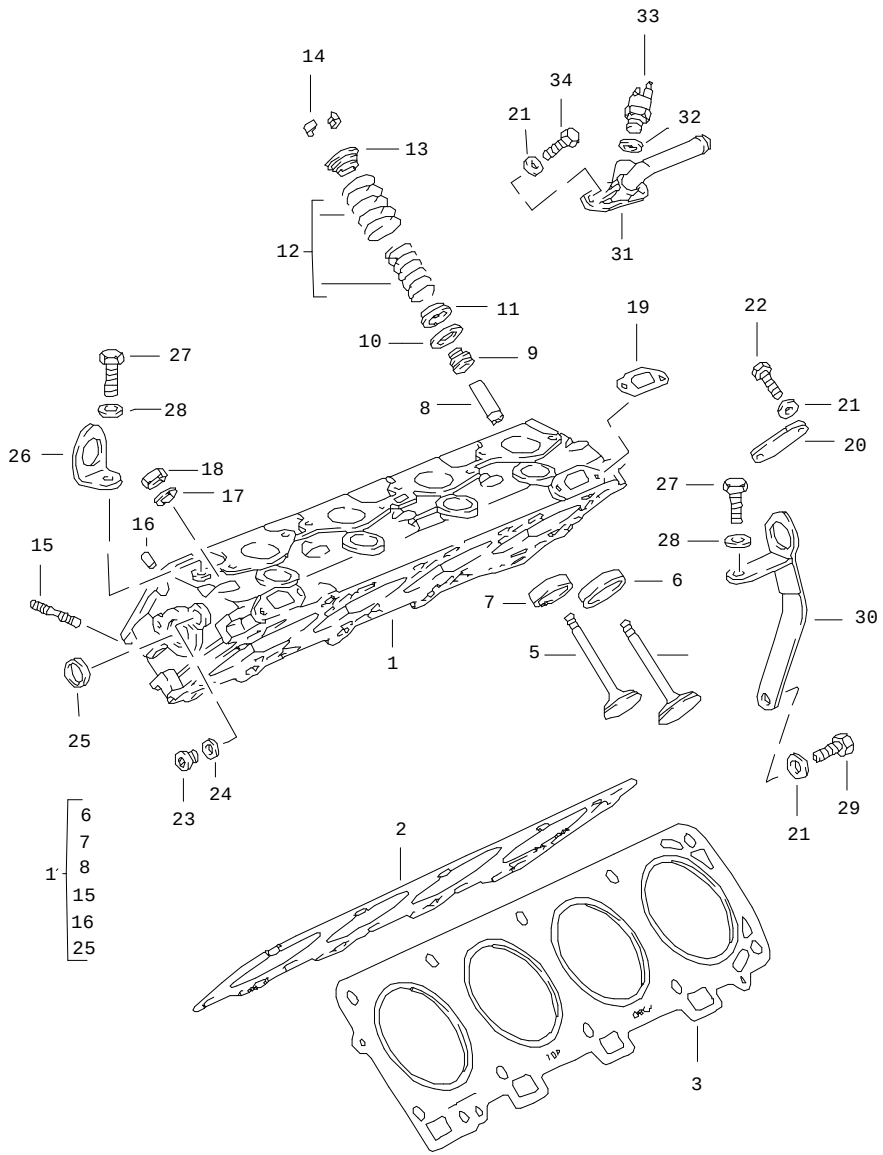

Pos	Part Number	Name	Remarks	Qty	Model
		cylinder head 2 valve			
1	> 928 104 055 05	cylinder head		2	M28.11/12 M28.21/22
1	928 104 072 00	cylinder head		2	M28.19/20 (J)
2	A 928 104 361 07	cylinder head gasket	/R	1	
2	928 104 361 07	cylinder head gasket without asbestos	/R	1	
3	A 928 104 362 07	cylinder head gasket	/L	1	
3	928 104 362 07	cylinder head gasket without asbestos	/L	1	
4	928 105 413 00	intake valve		8	M28.19/20 (J)
(4)	928 105 409 02	intake valve		8	M28.11/12 M28.21/22
5	928 105 417 03	exhaust valve		8	M28.19/20 (J)
(5)	928 105 410 04	exhaust valve		8	M28.11/12 M28.21/22
6	928 104 338 55	valve seat ring intake oversize		8	M28.19/20 (J)
6	944 104 331 51	valve seat ring intake oversize		8	M28.11/12 M28.21/22
7	928 104 336 55	valve seat ring exhaust oversize		8	M28.19/20 (J)
7	944 104 333 50	valve seat ring exhaust oversize		8	M28.11/12 M28.21/22
8	944 104 328 51	valve guide 1st oversize		16	

Pos	Part Number	Name	Remarks	Qty	Model
9	* 928 104 193 12	valve stem seal		16	
10	928 105 468 03	washer 0,5 MM		X	
11	928 105 469 06	washer		16	
12	928 105 905 09	set of valve springs		16	
13	928 105 449 04	concave washer		16	
14	901 105 417 00	collet		32	
15	999 062 044 02	stud 8 X 30		16	
16	900 302 019 00	straight pin 8 M 6 X 24		4	
17	928 101 301 02	washer		20	
18	999 076 043 02	hexagon nut M 12 X 1,5		20	
19	928 106 197 02	gasket 1,5 MM		2	
20	E 928 104 214 00	cover	/L	1	
21	900 025 007 02	washer A 8,4		5	
22	900 075 079 02	hexagon-head bolt M 8 X 22		2	
23	900 219 004 02	screw plug M 16 X 1,5		2	
24	* 900 123 018 30	sealing ring 16 X 20		2	
25	900 036 005 02	cover		4	
26	928 101 411 00	bracket for transportation		1	
27	N 010 253 7	hexagon-head bolt M 10 X 22		2	
28	900 025 008 09	washer A 10,5		2	
29	900 075 085 02	hexagon-head bolt M 8 X 20		1	
30	928 101 412 01	shackle for transportation		1	
31	928 104 025 05	adapter	/R 83	1	
31	928 104 061 01	adapter	84-	1	
32	* 900 123 007 30	sealing ring A 14 X 18		1	
33	928 605 104 00	temperature switch	83	1	
34	900 075 029 09	hexagon-head bolt		2	
		- -- E N D -- -			

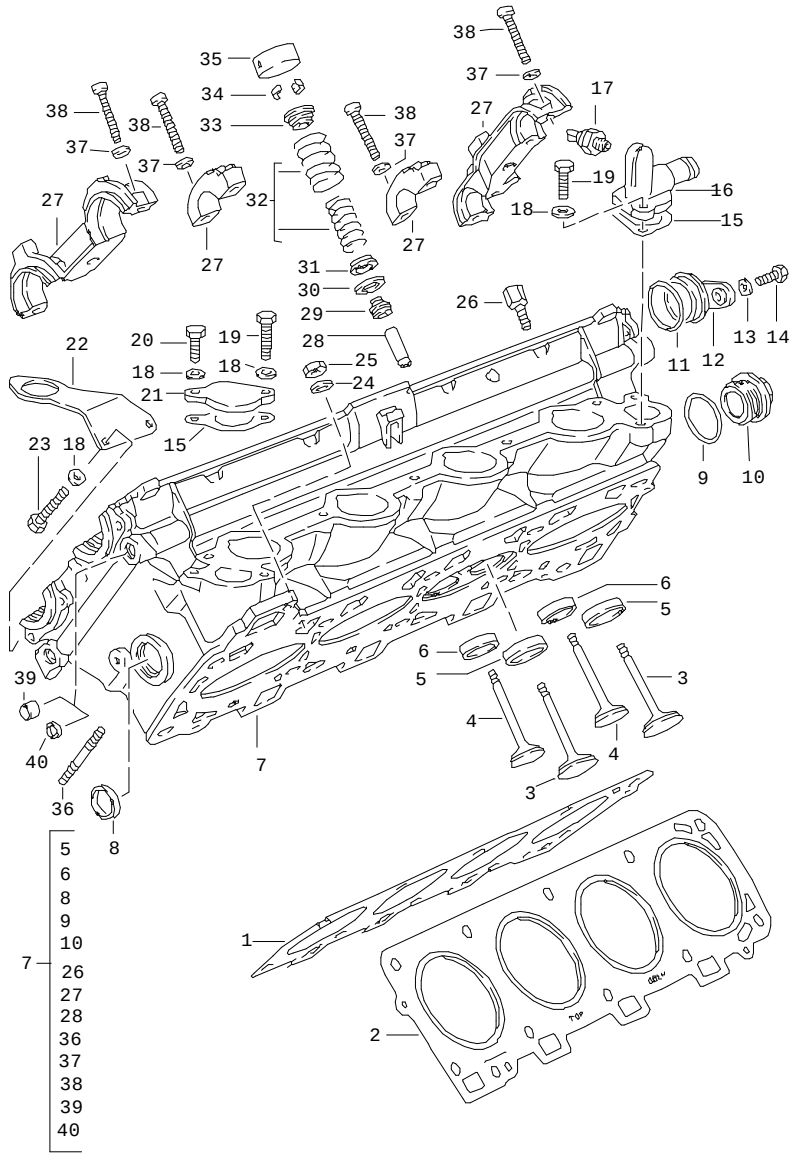

Pos	Part Number	Name	Remarks	Qty	Model
		cylinder head 4 valve	85- 86		M28.43/44 M28.45/46
1	A 928 104 367 02	cylinder head gasket cyl. 1 - 4		1	
1	928 104 367 05	cylinder head gasket cyl. 1 - 4 without asbestos		1	
1	928 104 367 11	cylinder head gasket cyl. 1 - 4 without asbestos for resurfaced cylinder heads		1	
2	A 928 104 368 02	cylinder head gasket cyl. 5 - 8		1	
2	928 104 368 05	cylinder head gasket cyl. 5 - 8 without asbestos		1 1	
2	928 104 368 11	cylinder head gasket cyl. 5 - 8 without asbestos for resurfaced cylinder heads		1	
3	928 105 641 01	intake valve		16	
4	928 105 642 01	exhaust valve		16	
5	928 104 611 12	valve seat ring intake oversize		16	
6	A 928 104 612 12	valve seat ring		16	
6	928 104 612 14	valve seat ring exhaust		16	
7	> 928 104 050 01	cylinder head		2	
8	900 036 014 02	cover		2	
9	N 043 811 1	sealing ring C 38 X 44		2	
10	944 104 228 01	screw plug CM 38 X 1,5		2	
11	A 928 105 319 02	sealing ring		6	

Pos	Part Number	Name	Remarks	Qty	Model
(11)	928 105 215 00	cover		6	
12	A 944 105 259 00	cover		6	
(12)	928 105 205 00	support		6	
13	N 011 524 7	washer A 6,4		6	
14	900 075 016 02	hexagon-head bolt M 6 X 22		5	
15	928 106 167 01	gasket		2	
(15)	928 106 167 01	gasket without asbestos		2	
16	928 104 713 02	adapter cyl. 1 - 4		1	
17	928 110 128 01	thermo valve		1	
18	900 025 007 02	washer A 8,4		8	
19	900 075 029 09	hexagon-head bolt M 8 X 25		3	
20	900 075 079 02	hexagon-head bolt M 8 X 22		1	
21	928 104 219 00	cover cyl. 5 - 8		1	
22	928 113 173 02	shackle for transportation		2	
23	900 075 085 02	hexagon-head bolt M 8 X 20		2	
24	928 101 301 02	washer M 12 X 1,5		20	
25	999 076 043 02	hexagon nut M 12 X 1,5		20	
26	E 928 104 484 00	spacer screw not available		24	
28	944 104 327 51	valve guide 1st oversize		32	
29	928 104 601 07	valve stem seal		32	
30	944 105 465 02	washer 0,5 MM		X	
(30)	944 105 465 03	washer 1,0 MM		X	
(30)	944 105 465 04	washer 1,5 MM		X	
(30)	944 105 465 05	washer 2,0 MM		X	
31	944 105 463 02	washer		32	
(32)	928 105 905 07	set of valve springs		32	
33	944 105 467 03	concave washer		32	
34	928 105 221 10	valve collet		64	
35	928 105 312 02	hydraulic valve tappet		32	
36	999 062 044 02	stud BM 8 X 30		16	
38	N 014 743 2	pan-head screw M 6 X 30		48	
39	911 101 182 00	plug		X	
40	N 011 918 1	cover		X	
-	928 101 231 01	hexagon-head bolt M 12 X 1,5 X 180		18	
-	928 101 233 01	hexagon-head bolt M 12 X 1,5 X 130		2	
		- -- E N D -- -			

Model	Year	MG	SG	Illustration	Restrictions	Update	14:12	01.09.2004	PORSCHE	PET	PORSCHE
928	86	1	03	103-05		179					

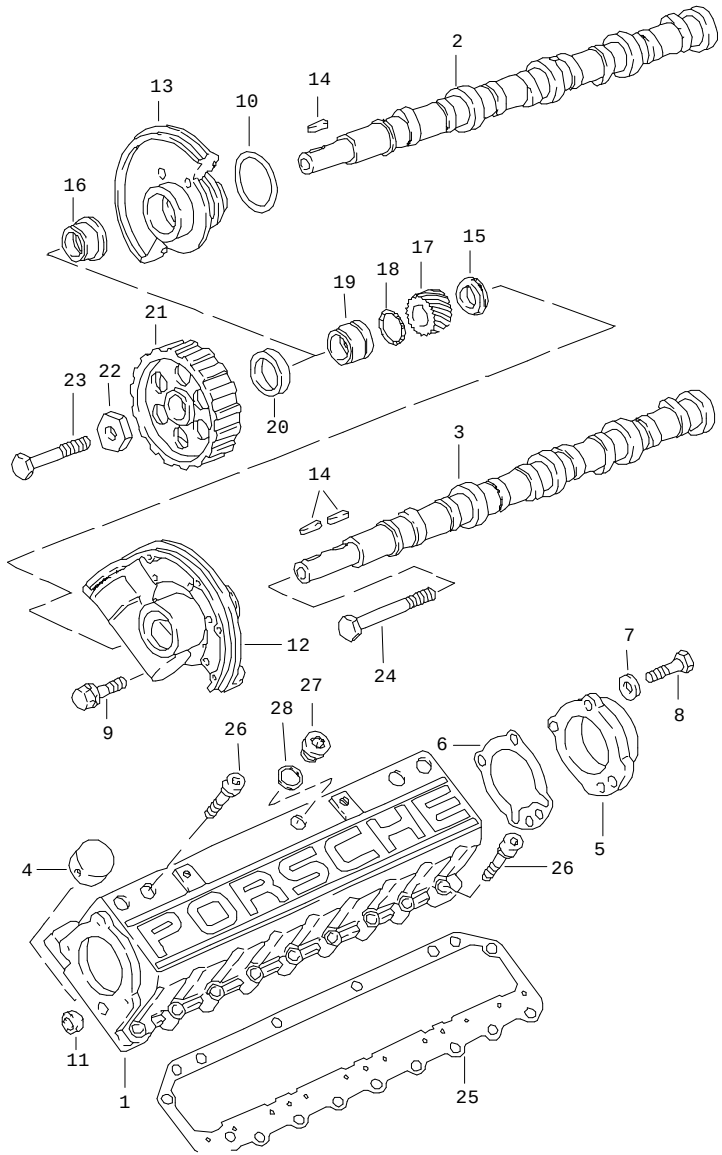

Pos	Part Number	Name	Remarks	Qty	Model
		camshaft 2 valve			
1	928 105 251 00	camshaft housing		2	
2	928 105 187 03	camshaft cyl. 1 - 4	83	1	M28.11/12
2	928 105 211 00	camshaft cyl. 1 - 4	84-	1	M28.21/22
2	928 105 203 00	camshaft cyl. 1 - 4	-84	1	M28.19/20
3	928 105 188 03	camshaft cyl. 5 - 8	83	1	M28.11/12
3	928 105 212 00	camshaft cyl. 5 - 8	84-	1	M28.21/22
3	928 105 204 00	camshaft cyl. 5 - 8	-84	1	M28.19/20
4	928 105 311 06	hydraulic valve tappet		16	
5	928 105 153 03	cover		2	
6	* 928 105 189 02	gasket		2	
7	N 011 524 7	washer A 6,4		12	
8	900 075 016 02	hexagon-head bolt M 6 X 22		6	
9	900 075 341 02	screw M 6 X 25 Z1		6	
10	* 999 701 602 40	o-ring 50 X 5		2	
11	* 928 105 184 00	sealing ring		2	
12	928 105 136 04	flange mounting	/L	1	
13	928 105 119 04	camshaft bearing	/R	1	
14	900 117 050 00	key		3	
15	928 105 131 01	spacer sleeve	/L	1	

Pos	Part Number	Name	Remarks	Qty	Model
16	928 105 139 02	spacer sleeve M >> 82G 00071 M >> 82G 05066	/R	1	 M28.21 M28.22
16	928 105 139 04	spacer sleeve M 82G 00072 >> M 82G 05067 >>	/R	1	 M28.21 M28.22
17	928 105 543 02	drive wheel		1	
18	* 999 701 592 40	o-ring 23 X 2		2	
19	928 105 143 02	spacer tube		1	
20	999 113 282 40	shaft seal M >> 82G 00071 M >> 82G 05066		2	 M28.21 M28.22
20	999 113 349 40	shaft seal M 82G 00072 >> M 82G 05067 >>		2	 M28.21 M28.22
21	928 105 545 10	camshaft timing gear		2	
22	928 105 565 00	washer		2	
23	N 010 470 7	hexagon-head bolt M 10 X 70		1	
24	900 074 224 08	hexagon-head bolt M 10 X 95		1	
25	A 928 105 199 12	gasket		2	
(25)	928 105 199 13	gasket without asbestos		1	
26	900 067 214 02	pan-head screw BM 8 X 35		30	
27	900 219 009 30	screw plug M 18 X 1,5		12	
28	900 123 140 30	sealing ring A 18 X 22		12	
		- -- E N D -- -			

Pos	Part Number	Name	Remarks	Qty	Model

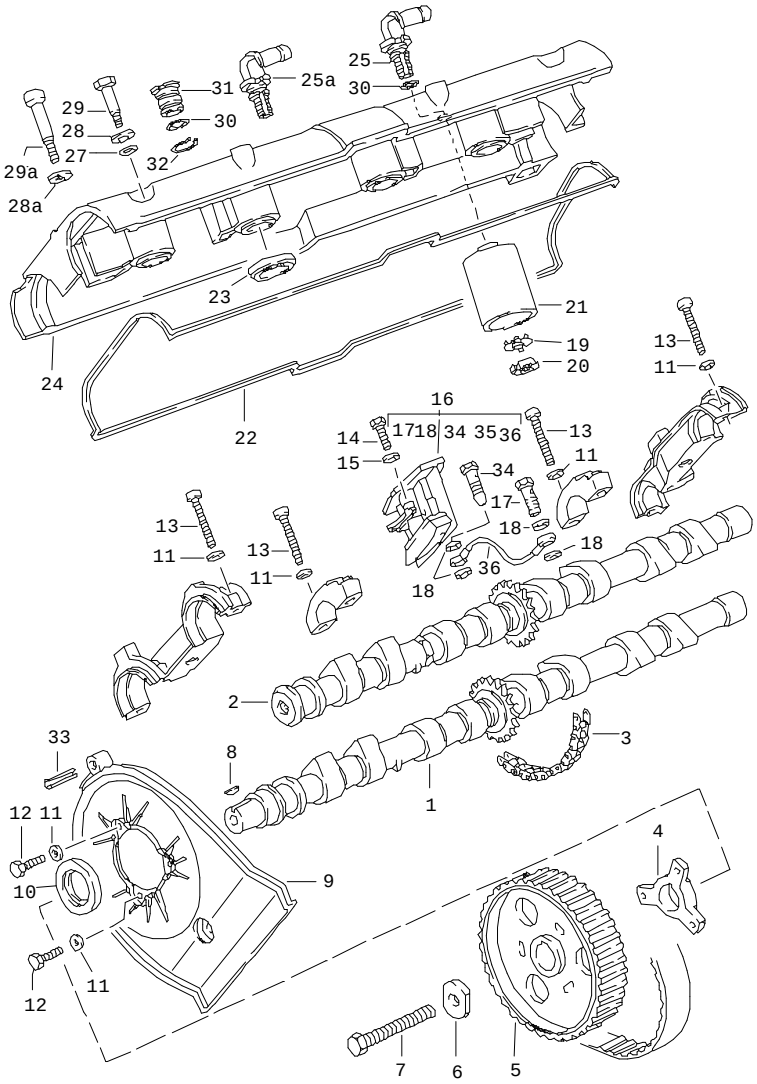

Pos	Part Number	Name	Remarks	Qty	Model
		camshaft driving mechanism 4 valve	85- 86		M28.43/44 M28.45/46
1	928 105 293 08	camshaft exhaust cyl. 1 - 4		1	
(1)	928 105 294 07	camshaft exhaust cyl. 5 - 8		1	
2	928 105 291 08	camshaft intake cyl. 1 - 4		1	
(2)	928 105 292 08	camshaft intake cyl. 5 - 8		1	
3	944 105 501 05	timing chain		2	
4	928 105 459 00	hub		2	
5	928 105 530 01	camshaft timing gear		2	
6	928 105 457 02	washer		2	
7	N 010 455 3	screw M 10 X 55		2	
8	900 117 055 00	key		2	
9	928 105 127 04	toothed belt covering	/L	1	
(9)	928 105 148 05	toothed belt covering	/R	1	
10	999 113 282 40	shaft seal		2	
11	900 025 007 02	washer A 6,4		6	
12	900 075 014 02	hexagon-head bolt M 6 X 18		6	
13	N 014 743 2	pan-head screw M 6 X 30		48	
14	900 067 089 02	pan-head screw M 6 X 22		2	
15	N 011 524 7	washer A 6,4		2	

Pos	Part Number	Name	Remarks	Qty	Model
16	928 105 028 08	chain adjuster cyl. 1 - 4		1	
(16)	928 105 027 08	chain adjuster cyl. 5 - 8		1	
17	928 105 476 00	banjo bolt		2	
18	900 123 050 30	sealing ring		4	
19	900 160 015 00	tab washer B 18		2	
20	900 159 008 02	grooved nut M 18 X 1,5		2	
21	928 107 731 01	oil separator cyl. 1 - 4		1	
(22)	928 104 447 06	gasket		2	
23	928 104 443 08	sealing ring		8	
24	928 104 461 06	cylinder head cover		2	
25	928 107 733 00	adapter		1	
25A	928 107 733 02	adapter cyl. 1 - 4 only together with 928.104.461.06		1	
27	999 701 731 40	o-ring 8,5 X 2,5		22	
(28A)	928 104 417 02	washer A 9,3		22	
29A	928 104 481 17	hexagon-head bolt		18	
(29A)	928 104 481 18	hexagon-head bolt		6	
30	900 174 056 40	o-ring 17 X 2,5		4	
31	928 104 485 01	cover ZYL.5 - 8		2	
32	N 012 420 1	circlip 20 X 1,2		2	
33	999 095 103 01	roll pin		1	
34	928 105 081 01	check valve		1	
36	928 105 213 02	pipeline cyl. 1 - 4	85	1	M28.43/44
36	928 105 213 03	pipeline cyl. 1 - 4	86	1	M28.43/44 M28.45/46
(36)	928 105 214 02	pipeline cyl. 5 - 8	85	1	M28.43/44
(36)	928 105 214 03	pipeline cyl. 5 - 8	86	1	M28.43/44 M28.45/46

- -- E N D -- -

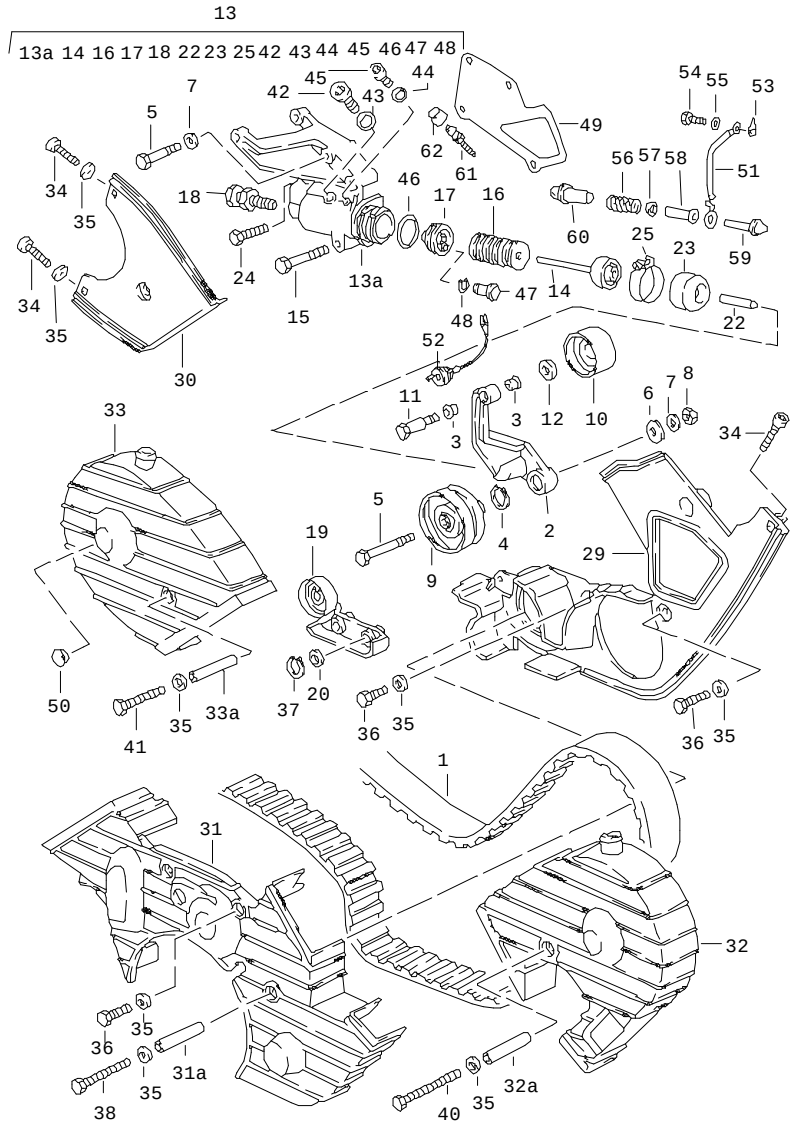

Pos	Part Number	Name	Remarks	Qty	Model
		driving mechanism camshaft			
1	928 105 157 50	toothed belt		1	
2	A 928 105 540 03	carrier for tension roller		1	M28.11/12 M28.19/20
2	928 105 540 05	carrier for tension roller		1	M28.11/12 M28.19-22
(2)	928 105 489 00	carrier for tension roller		1	M28.43/44 M28.45/46
3	999 924 003 40	bush		2	M28.11/12 M28.19-22
(3)	928 105 613 04	bearing sleeve	85- 85-	2	M28.21/22 M28.43/44
4	N 042 364 1	circlip 20 X 1,75		1	
5	900 074 139 02	hexagon-head bolt M 8 X 55		3	
6	999 025 068 07	washer 9 X 25 X 3,5		1	
7	900 025 007 02	washer A 8,4		1	
8	900 076 025 02	hexagon nut M 8		1	
(9)	928 105 512 12	tensioning roller		1	
10	928 105 571 00	roller M >> 82D 00630 M >> 82D 05848 M >> 81D 00789 M >> 81D 05765		1	 M28.11 M28.12 M28.19 M28.20
10	928 105 571 02	roller M 82D 00631 >> M 82D 05849 >> M 81D 00790 >> M 81D 05766 >>	 83 83 -84 -84	1	 M28.11 M28.12 M28.19 M28.20
10	928 105 571 02	roller	84- 85	1	M28.21/22 M28.43/44
10	928 105 571 04	roller	86	1	M28.43-46

Pos	Part Number	Name	Remarks	Qty	Model
(11)	928 105 570 03	pin		1	
12	928 105 572 00	washer		1	
13	E 928 105 046 06	tension roller housing		1	
(13)	928 105 036 00	tension roller housing		1	M28.43/44 M28.45/46
13A	928 105 066 00	tension roller housing		1	M28.43/44 M28.45/46
13A	928 105 086 02	tension roller housing		1	M28.21/22
14	A 928 105 059 04	piston		1	
14	928 105 059 04	piston		1	
15	900 074 135 02	hexagon-head bolt M 8 X 62		1	M28.21/22
(15)	N 010 360 6	hexagon-head bolt M 8 X 60		1	M28.43/44
16	928 105 539 03	bi-metal plate		35	
17	928 105 588 00	valve support		1	
18	928 105 075 03	adjusting screw		1	
(19)	928 105 567 01	guide piece		1	
19	928 105 067 00	bracket M 82D 0455 >> M 82D 5596 >> M 81D 5431 >> only together with 928.105.147.03		1	M28.21/22 M28.11 M28.12 M28.20
20	900 234 003 02	shim 8 X 14 X 1		2	
22	928 105 551 02	push rod		1	
23	928 105 552 06	roller		1	
(23)	928 105 552 08	roller		1	
24	900 074 134 02	hexagon-head bolt M 8 X 45		1	
25	999 512 345 02	hose clamp S50/7		1	
(25)	999 512 344 02	terminal 49,9 - 53/7		1	
29	928 105 147 05	toothed belt covering		1	
30	928 105 148 00	toothed belt covering		1	M28.11/12 M28.19/20
(31)	928 105 144 05	toothed belt covering	83 83	1	M28.11/12 M28.19/20
(31)	928 105 144 05	toothed belt covering	84- 84-	1	M28.19/20 M28.21/22
31	928 105 144 04	toothed belt covering		1	M28.43/44 M28.45/46
31A	928 105 445 00	spacer tube 44,5 MM		1	
32	928 105 145 04	toothed belt covering		1	M28.11/12 M28.19/20 M28.21/22
32	928 105 145 07	toothed belt covering		1	M28.43/44
32A	928 105 443 00	spacer tube 82,5 MM		1	
33	928 105 146 03	toothed belt covering	84-	1	
33	928 105 146 05	toothed belt covering		1	M28.43/44
33A	928 105 444 00	spacer tube 57,5 MM		1	
34	900 067 008 02	pan-head screw M 6 X 12		3	
35	N 011 524 7	washer A 6,4		14	
36	900 075 014 02	hexagon-head bolt M 6 X 18		5	
37	N 012 408 2	circlip 8 X 0,8		2	
38	N 040 307 1	hexagon-head bolt M 6 X 73		1	
39	900 223 003 02	washer B 6,4		5	

Pos	Part Number	Name	Remarks	Qty	Model
40	900 074 262 02	hexagon-head bolt M 6 X 98		1	
41	900 074 164 02	hexagon-head bolt M 6 X 70		1	
42	900 219 007 02	hexagon-head bolt M 10 X 1		1	
43	900 123 144 30	sealing ring A 10 X 13,5		1	
44	900 123 102 30	sealing ring A 6,5 X 9,5		1	
45	N 014 765 2	pan-head screw M 6 X 10		1	
46	999 701 650 40	o-ring 27,5 X 1,5		1	
47	928 105 589 00	valve		1	
48	900 906 002 00	snap ring		1	
49	928 105 611 05	gasket		1	
50	914 552 233 10	filler piece		1	M28.19/20
	01C	black			
51	928 105 615 00	contact bridge		1	M28.21/22
51	928 105 615 01	bridge		1	M28.43/44 M28.45/46
52	928 606 148 00	extension cable		1	
53	999 652 315 02	flat plug for carrier for tension roller		1	
54	N 010 205 6	hexagon-head bolt M 5 X 10		1	
55	900 025 003 02	washer A 5,3		1	
56	928 105 577 03	compression spring		1	
57	900 025 008 09	washer		1	
58	928 105 574 01	guide sleeve		1	
59	928 105 573 02	push rod		1	
60	928 105 578 03	mounting		1	
61	211 611 477 A	bleeder valve		2	M28.43/44 M28.45/46
62	211 611 483	dust boot		2	M28.43/44 M28.45/46

- -- E N D -- -

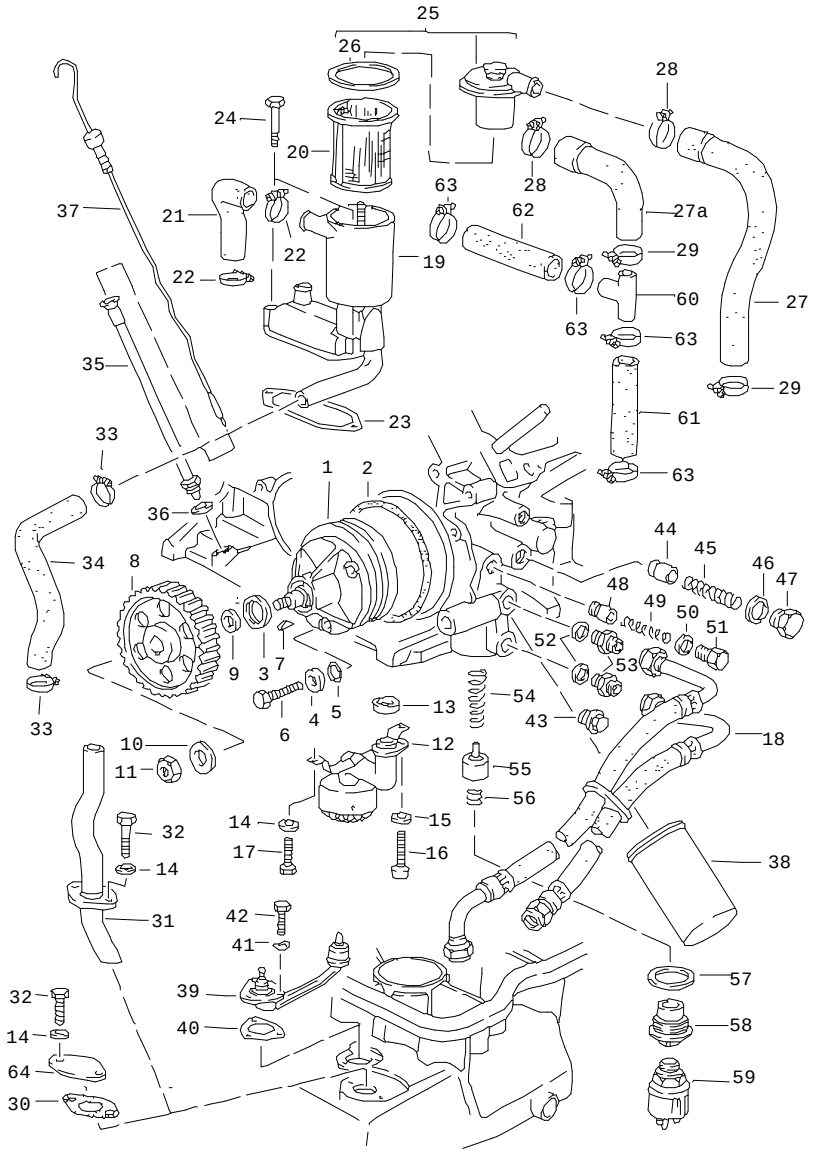

Pos	Part Number	Name	Remarks	Qty	Model
		engine lubrication			
1	928 107 008 02	oil pump		1	
2	999 701 633 40	o-ring 98 X 3		1	
3	999 113 275 40	shaft seal 20 X 30 X 7		1	
4	928 107 165 00	washer A 8,4		3	
5	999 701 006 40	o-ring		3	
6	900 074 134 02	hexagon-head bolt M 8 X 45		3	
7	N 012 713 1	woodruff key 5 X 6,5		1	
8	928 107 107 13	gear wheel		1	
9	928 107 166 00	support washer		1	
10	928 101 303 00	washer 10,5		1	
11	N 011 010 6	hexagon nut M 10		1	
12	928 107 032 06	suction tube		1	
13	928 107 136 04	sealing ring		1	
14	N 011 524 7	washer A 6,4		4	
15	900 025 007 02	washer A 8,4		1	
16	N 014 726 1	pan-head screw M 8 X 30		1	
17	999 072 005 09	hexagon-head bolt M 6 X 12		2	
18	928 107 037 05	oil hose	85- 85-	1	M28.11/12 M28.21/22
18	928 107 037 05	oil hose		1	M28.43/44 M28.45/46
19	928 107 071 01	oil separator		1	

Pos	Part Number	Name	Remarks	Qty	Model
(19)	928 107 083 02	filler neck		1	M28.43/44 M28.45/46
20	E 928 107 717 03	oil strainer		1	
21	928 107 315 00	hose for oil separator		1	
22	999 512 038 02	hose clamp S 28/9		2	
23	928 107 707 04	gasket		1	
23	928 107 707 04	gasket without asbestos		1	
(23)	928 107 303 07	filler neck		1	M28.43/44 M28.45/46
24	900 075 343 02	hexagon-head bolt M 6 X 45 Z1		2	
25	928 199 710 03	cover		1	
(25)	944 107 091 01	oil filler cover		1	M28.43/44 M28.45/46
(26)	999 701 653 40	o-ring		1	M28.43/44 M28.45/46
26	928 107 711 00	gasket		1	
27	928 107 722 00	breather hose	83	1	
27	E 928 107 722 01	breather hose	84-	1	M28.21/22
27A	928 107 724 00	hose elbow M 81D 0955 >> M 81D 6180 >>		1	M28.19/20
28	999 512 252 02	hose clamp LA 23-35		1	
29	N 024 115 1	hose clamp S 23/9		1	
30	928 107 169 01	gasket		1	
30	928 107 169 01	gasket without asbestos		1	
31	928 107 167 01	oil tube	-85	1	
31	928 107 167 02	oil tube	86	1	
32	N 010 217 9	hexagon-head bolt M 6 X 20		2	
33	999 512 038 02	hose clamp		2	
34	928 107 311 01	connecting hose		1	
35	928 107 020 00	guide tube M >> 82F 00664 M >> 82F 06403 M >> 81F 00699 M >> 81F 06446		1	 M28.21 M28.22 M28.43 M28.44
(35)	928 107 020 06	guide tube M 82F 00665 >> M 82F 06404 >>		1	 M28.21 M28.22
(35)	928 107 020 01	guide tube M 81F 00700 >> M 81F 06447 >>		1	 M28.43 M28.44
36	* 900 123 007 30	sealing ring A 14 X 18 M >> 82F 00664 M >> 82F 06403 M >> 81F 00699 M >> 81F 06446		1	 M28.21 M28.22 M28.43 M28.44
(36)	* 900 174 044 40	round seal M 82F 00665 >> M 82F 06404 >> M 81F 00700 >> M 81F 06447 >>		1	 M28.21 M28.22 M28.43 M28.44
37	928 107 737 07	oil level dipstick M >> 82F 00664 M >> 82F 06403		1	M28.11/12 M28.21/22 M28.21 M28.22
37	928 107 737 11	oil level dipstick M >> 81F 00699 M >> 81F 06446		1	 M28.43 M28.44
(37)	928 107 041 01	oil level dipstick M 82F 00665 >> M 82F 06404 >> M 81F 00700 >> M 81F 06447 >>		1	 M28.21 M28.22 M28.43 M28.44
38	A 928 107 201 05	oil filter		1	
38	928 107 201 05	oil filter		1	

Pos	Part Number	Name	Remarks	Qty	Model
39	928 606 301 02	tank gauge		1	
40	A 928 606 213 03	gasket		1	
40	928 606 213 03	gasket without asbestos		1	
41	N 012 222 4	spring washer B 5		3	
42	N 010 207 6	hexagon-head bolt M 5 X 12		3	
43	N 016 163 2	screw plug M 22 X 1,5		2	
44	928 107 182 00	piston		1	M28.11/12 M28.21/22
44	928 107 182 00	piston	85-	1	M28.43/44
45	928 107 183 01	compression spring		1	M28.11/12 M28.21/22
45	928 107 183 01	compression spring	85-	1	M28.43/44
46	* 900 123 060 30	sealing ring A 24 X 29		1	
47	928 107 181 01	screw plug		1	
48	928 107 081 00	piston with sealing strap		1	
49	928 107 176 02	compression spring		1	
50	900 123 140 30	sealing ring A 18 X 22		1	
51	928 107 180 01	screw plug		1	
52	* 900 123 118 30	sealing ring A 22 X 27		2	
53	900 915 003 02	screw socket		2	M28.11/12 M28.21/22
53	900 915 003 02	screw socket	85-	2	M28.43/44
54	928 107 171 01	spring		1	M28.11/12 M28.21/22
54	928 107 171 01	spring	85-	1	M28.43/44
55	928 107 172 02	regulator insert		1	M28.11/12 M28.21/22
55	928 107 172 02	regulator insert	85-	1	M28.43/44
56	928 107 173 00	spring		1	M28.11/12 M28.21/22
56	928 107 173 00	spring	85-	1	M28.43/44
57	* 900 123 143 70	sealing ring C 48 X 55		1	
58	928 107 174 07	screw plug		1	
59	928 606 203 01	oil pressure sender with warning contact		1	
60	928 107 351 00	overflow valve M 81D 0955 >> M 81D 6180 >>		1	M28.19/20
-	999 236 002 50	hose D 12 X 3,5		*	
61	-	150 MM		1	
62	-	610 MM		1	
63	900 272 003 02	hose clamp S 19 / 9 ZY		4	
64	928 107 209 00	cover	85-	1	M28.43/44
-	928 107 445 00	hose		1	M28.43/44
-	928 107 313 00	hose	85-	1	M28.43/44

- -- E N D -- -

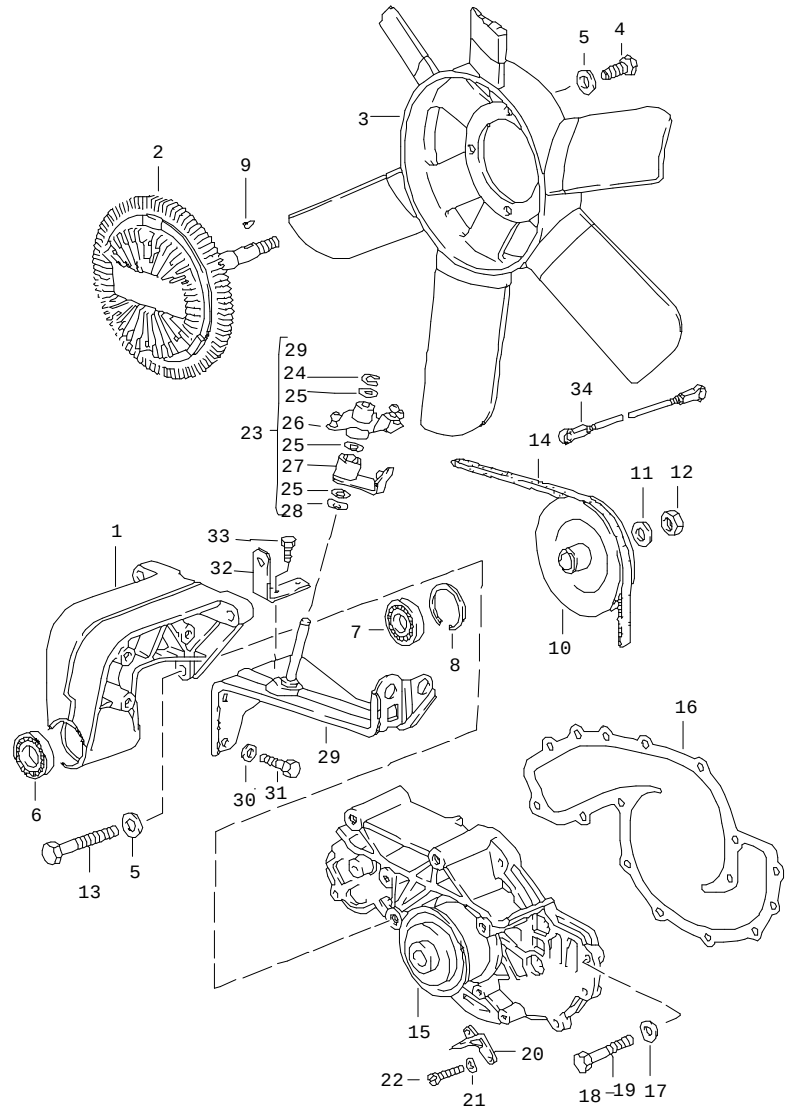

Pos	Part Number	Name	Remarks	Qty	Model
		fan water pump			
1	928 106 110 04	fan carrier		1	
2	928 106 112 05	viscous clutch only together with 928.106.137.01		1	
3	928 106 137 01	fan only together with 928.106.112.05		1	
4	900 075 087 02	hexagon-head bolt M 8 X 16		4	
5	900 025 007 02	washer A 8,4		7	
6	928 106 445 02	deep-groove ball bearing		1	
7	928 106 441 05	deep-groove ball bearing		1	
8	900 042 026 01	circlip 37 X 1,5		1	
9	N 012 708 2	woodruff key 4 X 5		1	
10	928 106 113 02	pulley		1	M28.11/12 M28.21/22
10	928 106 113 05	pulley		1	M 319
10	928 106 113 05	pulley		1	M28.20/44 (J)
11	900 025 008 09	washer A 10,5		1	
12	N 011 010 6	hexagon nut M 10		1	
13	N 010 335 5	hexagon-head bolt M 8 X 35		3	
14	999 192 160 50	narrow v-belt 12,5 X 1040 MM		1	
14	999 192 120 50	narrow v-belt 12,5 X 1025 MM	85-	1	M28.44 (J)

Pos	Part Number	Name	Remarks	Qty	Model
14	999 192 201 50	narrow v-belt 12,5 X 1014	-84	1	M28.20 (J)
15	928 106 015 11	water pump		1	
16	* 928 106 134 05	gasket without asbestos		1	
17	N 011 524 7	washer A 6,4		6	
18	N 010 217 9	hexagon-head bolt M 6 X 20		5	
19	900 075 341 02	screw M 6 X 25 Z1		8	
20	928 105 176 01	pointer for t.d.c.		1	
21	900 025 003 02	washer A 5,3		2	
22	900 014 066 02	pan-head screw M 5 X 18		2	
23	928 110 627 00	bracket	/LL 85- 86	1	M28.43/44 M28.45/46
(23)	927 110 627 00	bracket	/RL 86	1	M28.45/46
24	900 116 005 02	lock washer		1	
25	999 234 024 00	thrust washer		3	
26	928 110 679 00	reverse lever		1	
27	928 110 680 00	reverse lever	/LL 85- 86	1	M28.43/44 M28.45/46
(27)	927 110 680 01	reverse lever	/RL 86	1	M28.45/46
28	928 110 741 01	spring washer		1	
29	928 110 677 00	bracket	/LL 85- 86	1	M28.43/44 M28.45/46
30	900 025 007 02	washer A 8,4		3	
31	900 075 085 02	hexagon-head bolt M 8 X 20		3	
32	927 110 672 00	support	/RL 86	1	M28.45/46
33	N 014 706 7	pan-head screw M 8 X 12	/RL 86	2	M28.45/46
34	928 110 719 01	pull rod	85- 86	1	M28.43/44 M28.45/46

- -- E N D -- -

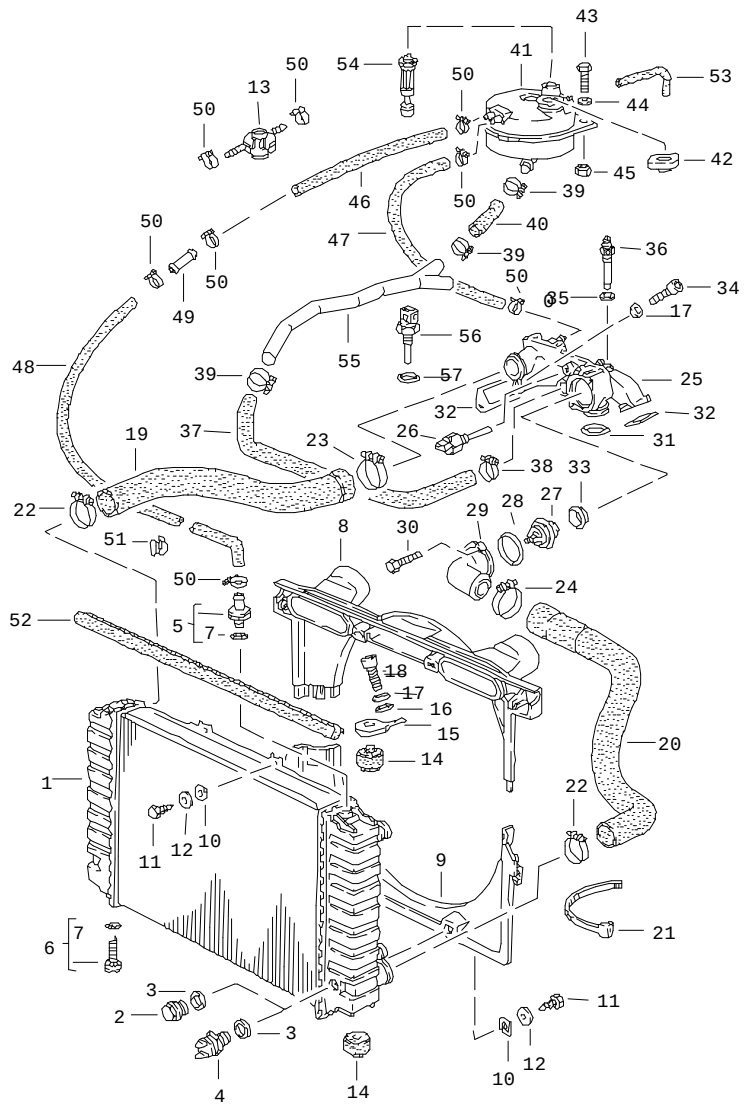

Pos	Part Number	Name	Remarks	Qty	Model
		water cooled			
1	A 928 106 040 02	radiator engine oil cooler		1	
1	928 106 040 02	radiator engine oil cooler		1	
1	A 928 106 040 00	radiator engine and transmission oil cooler	AUT. 83	1	
1	928 106 040 02	radiator engine and transmission oil cooler	AUT.	1	
1	928 106 040 02	radiator engine and transmission oil cooler	AUT.	1	
1	928 106 040 02	radiator engine and transmission oil cooler	AUT. 85-	1	(J)
1	928 106 040 02	radiator engine and transmission oil cooler	AUT.	1	(J)
(1)	A 928 106 040 02	radiator transmission oil cooler	AUT. 83	1	(J)
1	928 106 040 02	radiator transmission oil cooler	84-	1	(J)
2	N 016 163 2	screw plug CM 22 X 1,5		1	M28.19/20
3	* 900 123 149 70	sealing ring A 22 X 29		1	
4	823 959 481 F	switch		1	
5	928 106 443 02	breather adapter		1	
6	928 106 444 01	drain plug		1	
7	999 701 651 40	o-ring 7,65 X 1,78		X	

Pos	Part Number	Name	Remarks	Qty	Model
8	928 106 063 00	air duct		1	M28.11/12 M28.19-22
(8)	928 106 063 03	air duct upper part		1	M28.43/44 M28.45/46
9	928 106 262 02	air duct lower part		1	
10	999 591 571 02	speed nut B 6,3		4	
11	900 187 015 02	tapping screw B 6,3 X 16		4	
12	N 011 612 3	washer R 6,6		4	
13	928 641 513 00	pressure switch		1	
14	928 106 177 01	rubber mounting		4	
15	928 106 178 01	support		2	
16	900 151 008 02	washer A 8,4		2	
17	900 025 007 02	washer A 8,4		6	
18	900 119 052 02	pan-head screw M 8 X 16		2	
19	928 106 238 06	hose		1	
(19)	928 106 238 08	hose		1	M28.43/44
20	A 928 106 239 07	hose	-85	1	
20	928 106 239 07	hose	86	1	
21	999 513 010 40	tie-wrap		1	
22	999 512 330 02	hose clamp S 56/15		2	
23	999 512 331 02	hose clamp S 61/15		1	
24	999 512 334 02	hose clamp S 59/15		1	
25	A 928 106 016 04	regulator housing	-84	1	M28.20 (J)
25	928 106 016 12	regulator housing	-84	1	M28.20 (J)
25	A 928 106 016 05	regulator housing	83	1	M28.11/12
25	928 106 016 13	regulator housing	83	1	M28.11/12
25	928 106 016 14	regulator housing	84-	1	M28.21/22
25	928 106 065 03	regulator housing	85- 86	1	M28.43/44 M28.45/46
26	928 605 101 00	temperature time switch	-84	1	
27	928 106 129 16	thermostat		1	
27	928 106 129 17	thermostat		1	
28	* 999 701 632 40	o-ring		1	
29	928 106 173 02	cover regulator housing		1	
30	900 075 341 02	screw M 6 X 25 Z1		2	
31	* 999 701 627 40	o-ring 53 X 7		1	
32	928 106 197 01	gasket		2	
32	928 106 197 03	gasket		2	
32	928 106 227 00	gasket		2	M28.43/44 M28.45/46
33	928 106 163 00	gasket M 82D 0622 >> M 82D 5835 >>		1	M28.21/22 M28.11 M28.12
34	N 014 726 1	pan-head screw M 8 X 30		4	
35	* 900 123 007 30	sealing ring A 14 X 18		1	
36	928 606 201 01	remote temperature sensor		1	
37	928 106 321 03	line	/LL -84	1	
37	928 106 321 04	line	/LL 85-	1	

Pos	Part Number	Name	Remarks	Qty	Model
(37)	927 106 321 01	line	/RL	1	
38	999 512 300 02	hose clamp SR 33/9		X	
39	999 512 374 02	hose clamp SGT 20 - 32/9		3	
40	928 106 323 01	line		1	
41	928 106 256 03	expansion tank	/LL	1	
(41)	927 106 256 01	expansion tank	/RL	1	
42	928 106 257 03	catch		1	
43	900 187 015 02	tapping screw 6,3 X 16		2	
44	N 011 612 3	washer R 6,6		2	
45	999 591 571 02	speed nut B 6,3		2	
-	999 181 709 50	hose 8 X 14		*	
46	-	70 MM	84-	1	
46	-	330 MM	83	1	
(46)	-	270 MM	/RL 83	1	
47	928 106 275 02	hose	/LL	1	
(47)	927 106 275 02	hose	/RL	1	
(47)	927 106 275 03	hose	/RL 86	1	M28.45/46
48	E 928 106 277 01	hose	/LL 83	1	
48	928 106 277 02	hose	/LL 84-	1	
(48)	E 927 106 277 01	hose	/RL 83	1	M28.11/12
(48)	927 106 277 02	hose	/RL 84-	1	M28.21/22
49	999 230 106 02	nipple		1	
50	999 512 160 02	hose clamp SM 13/9		6	
51	999 651 165 02	cable clamp		3	
52	928 106 271 02	sealing strip for radiator 782 MM		1	
53	928 106 425 00	overpressure hose 350 MM		1	
54	928 641 503 01	tank gauge for cooling water		1	
55	-	see group 8/13/10 - 5		.	
56	928 606 125 01	temperature sensor		1	M28.20 (J)
(56)	928 606 126 00	temperature sensor	84- 86	1	M28.21/22 M28.45/46
57	900 123 101 30	sealing ring		1	
-	928 106 142 00	water tube for radiator		1	
-	927 106 321 02	hose line	/RL 86	1	M28.45/46
-	E 927 106 321 03	pipeline	/RL 86	1	M28.45/46
-	999 512 374 02	hose clamp S 20/33		X	
-	E 927 106 321 04	hose line	/RL 86	1	M28.45/46

- -- E N D -- -

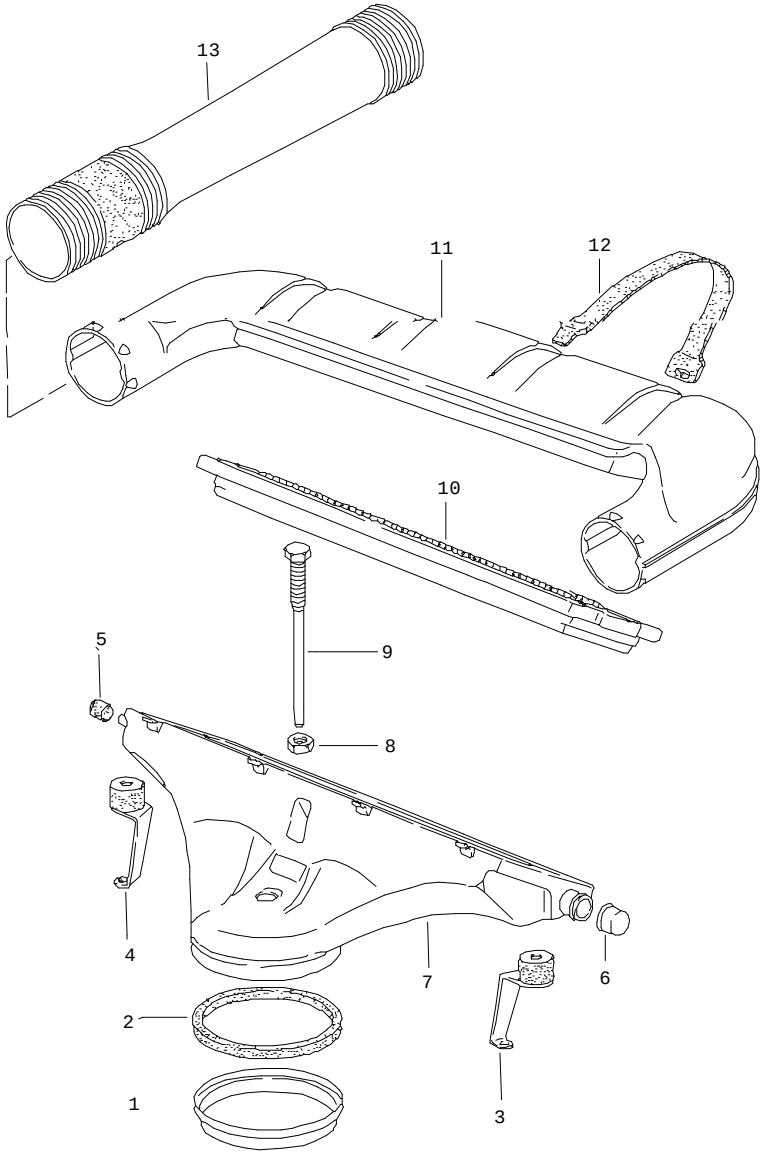

Pos	Part Number	Name	Remarks	Qty	Model
		air cleaner k-jetronic	83		M28.11/12
1	928 110 141 01	support ring		1	
2	* 930 110 122 00	sealing ring		1	
3	928 110 043 00	support	/L	1	
4	928 110 044 00	support	/R	1	
5	930 110 256 00	plug		1	
6	928 110 293 00	cap		1	
7	928 110 229 00	air cleaner lower part		1	
8	N 011 118 11	hexagon nut M 8		1	
9	E 928 110 142 00	screw		1	
10	928 110 185 03	air cleaner cartridge		1	
11	928 110 230 06	air cleaner upper part		1	
12	928 110 363 01	restraining strap		4	
12	928 110 363 01	restraining strap		4	
13	928 110 272 04	suction hose		2	
		- -- E N D -- -			

Model	Year	MG	SG	Illustration	Restrictions	Update	14:14	01.09.2004	PORSCHE	PET	PORSCHE
928	86	1	06	106-01		179					

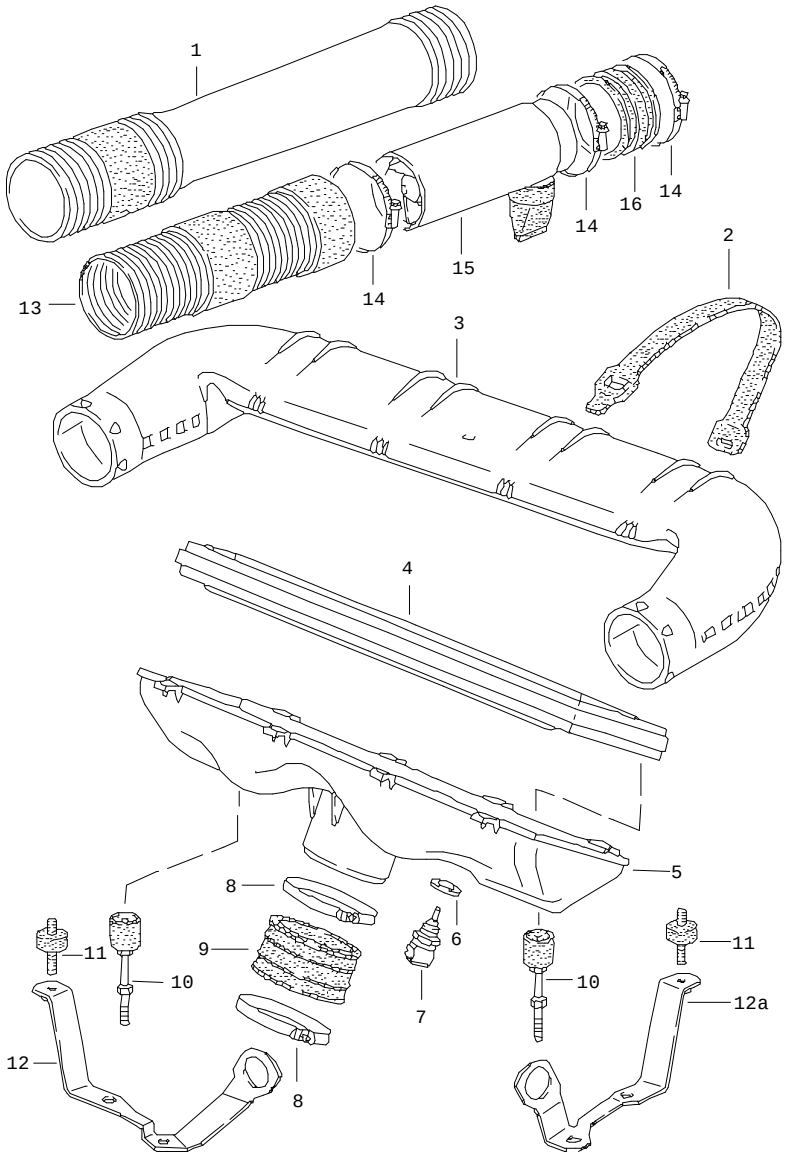

Pos	Part Number	Name	Remarks	Qty	Model
		air cleaner lh-jetronic	84- 85- 86		M28.21/22 M28.43/44 M28.45/46
1	928 110 272 04	suction hose		2	M28.21/22
(1)	928 110 272 06	suction hose	86	2	M28.45/46 (AUS) (CH) (BRD) (A)
(1)	928 110 272 11	suction hose		1	M28.43/44 M28.45/46
(1)	E 928 110 272 21	suction hose		1	M28.43/44 M28.45/46
2	928 110 363 01	restraining strap		4	M28.21/22
(2)	928 110 363 06	restraining strap		4	M28.43/44 M28.45/46
3	928 110 230 06	air cleaner upper part		1	M28.21/22
(3)	928 110 230 02	air cleaner upper part		1	M28.43/44 M28.45/46
4	* 928 110 185 03	air cleaner cartridge		1	
5	928 110 229 01	air cleaner lower part		1	M28.21/22
(5)	928 110 229 03	air cleaner lower part		1	M28.43/44 M28.45/46
6	900 123 055 30	sealing ring A 12 X 17		1	
7	928 606 143 00	temperature sensor		1	
8	999 512 539 00	hose clamp		2	
9	928 110 243 02	connecting hose		1	
10	928 110 049 02	support		2	M28.21/22
11	931 110 191 00	bonded rubber buffer		2	M28.43/44 M28.45/46
12	928 110 525 06	support		1	M28.43/44 M28.45/46

Pos	Part Number	Name	Remarks	Qty	Model
12A	928 110 145 11	support		1	M28.43/44 M28.45/46
13	928 110 272 05	suction hose		2	M 317
14	999 512 350 02	hose clamp		6	M 317
15	928 110 274 01	sand separator		2	M 317
16	928 110 347 00	rubber sleeve		2	M 317
		- -- E N D -- -			

Pos	Part Number	Name	Remarks	Qty	Model

Model	Year	MG	SG	Illustration	Restrictions	Update				
928	86	1	06	106-02		179	14:14	01.09.2004	PORSCHE	PET	PORSCHE

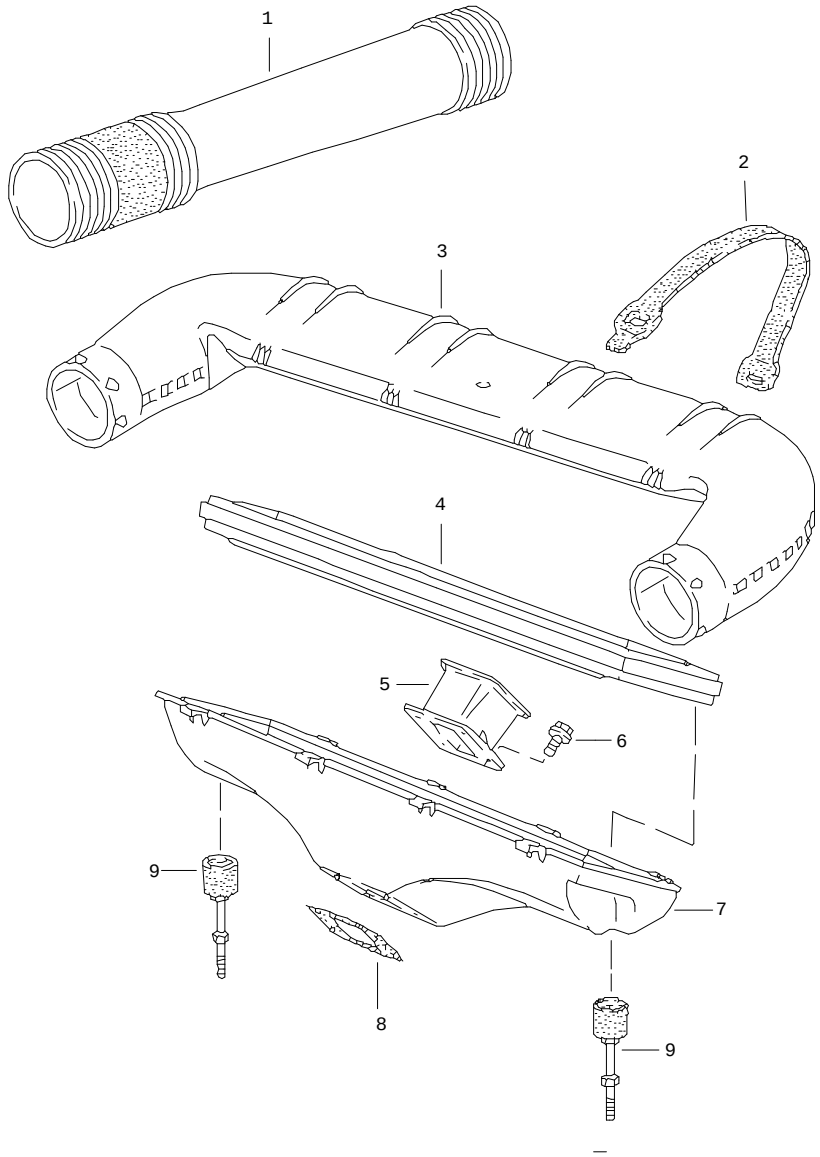

Pos	Part Number	Name	Remarks	Qty	Model
		air cleaner l-jetronic	-84		M28.19/20
1	928 110 272 04	suction hose		2	
2	928 110 363 01	restraining strap		4	
3	928 110 230 01	air cleaner upper part		1	(J)
4	928 110 185 03	air cleaner cartridge		1	
5	928 110 204 01	intake trumpet		1	
6	999 075 048 02	hexagon-head bolt M 6 X 22 Z1		4	
7	928 110 211 00	air cleaner lower part		1	
8	928 110 201 01	sealing frame		1	
9	928 110 049 00	support		2	
		- -- E N D -- -			

Model	Year	MG	SG	Illustration	Restrictions	Update				
928	86	1	07	107-00		179	14:14	01.09.2004	PORSCHE	PET	PORSCHE

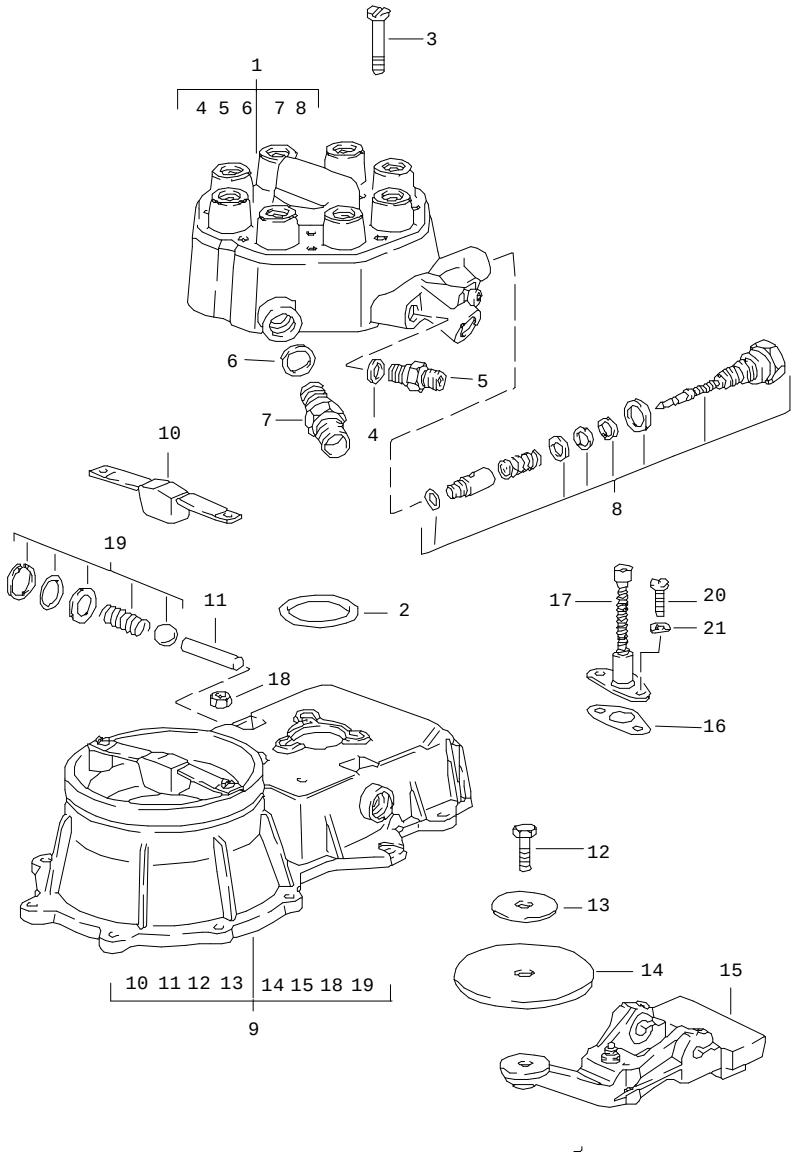

Pos	Part Number	Name	Remarks	Qty	Model
		k-jetronic 1 mixture control unit	83		M28.11/12
1	> 928 110 906 00	fuel distributor		1	
2	911 110 936 01	gasket		1	
3	900 146 045 02	oval-head screw BM 5 X 45		3	
4	* 900 123 115 30	sealing ring A 8 X 11,5		3	
5	928 110 223 03	union		2	
6	900 123 055 20	sealing ring A 12 X 17		1	
7	928 110 922 00	union		1	
8	928 110 920 01	parts kit pressure regulator		1	
9	928 110 905 02	mass air flow with consumption indicator		1	
10	928 110 924 00	stop		1	
11	911 110 941 01	straight pin		1	
12	911 110 944 01	hexagon-head bolt		1	
13	911 110 960 00	support washer		1	
14	911 110 943 01	air flow sensor plate		1	
15	928 110 923 00	control lever		1	
16	928 110 925 00	gasket		1	
17	928 110 926 00	adjusting key		1	
18	911 110 945 00	lock nut		1	
19	911 110 946 00	parts kit control lever		1	
20	N 014 128 13	oval-head screw M 5 X 8		2	
21	N 012 005 3	lock ring B 5		2	

Model	Year	MG	SG	Illustration	Restrictions	Update			
928	86	1	07	107-00		179	14:14	01.09.2004	PORSCHE PET PORSCHE

Pos	Part Number	Name	Remarks	Qty	Model	Pos	Part Number	Name	Remarks	Qty	Model
		- -- E N D -- -									

Model	Year	MG	SG	Illustration	Restrictions	Update				
928	86	1	07	107-05		179	14:15	01.09.2004	PORSCHE	PET	PORSCHE

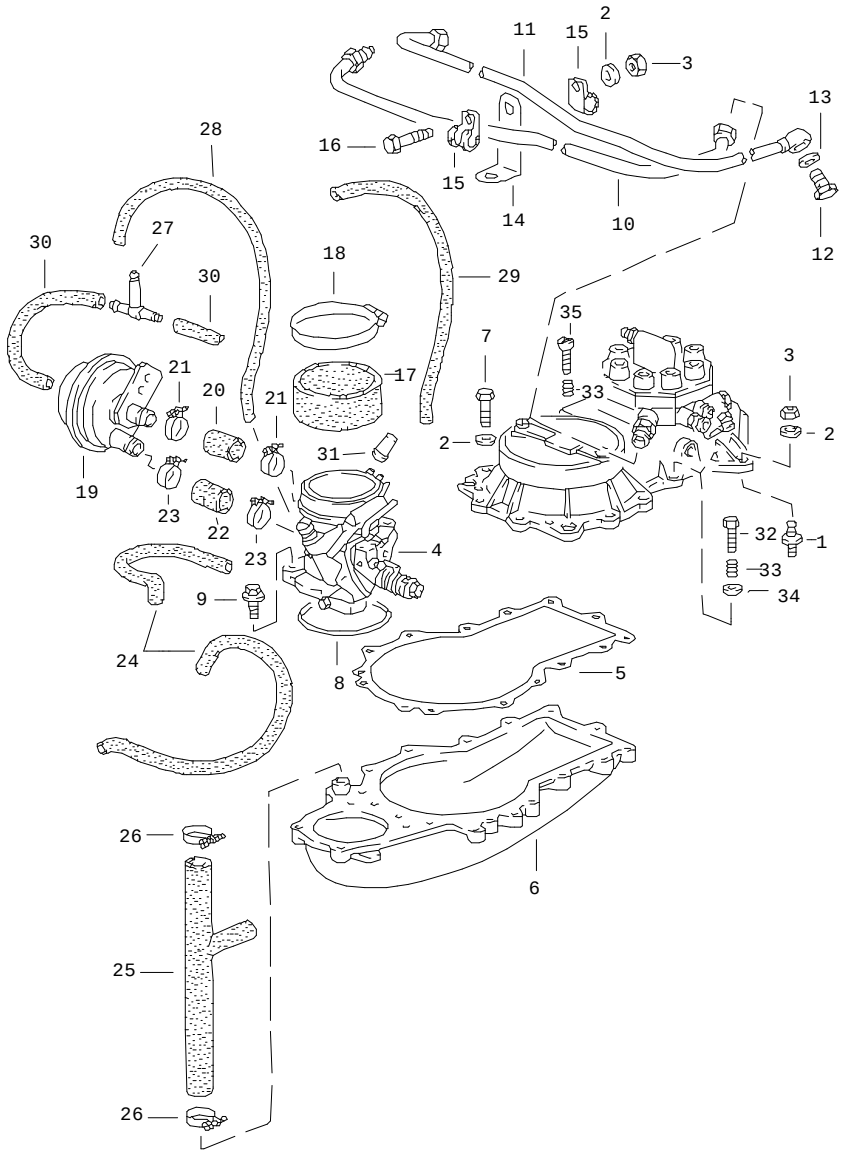

Pos	Part Number	Name	Remarks	Qty	Model
		k-jetronic 2	83		M28.11/12
1	928 110 191 00	bonded rubber buffer		4	
2	N 011 524 7	washer A 6,4		20	
3	900 076 010 02	hexagon nut M 6		6	
4	928 110 099 01	throttle housing		1	
5	* 930 110 394 00	gasket		1	
6	928 110 097 05	air guide housing		1	
7	N 010 217 9	hexagon-head bolt M 6 X 20		11	
8	999 701 436 40	o-ring 91 X 4		1	
9	900 075 341 02	screw M 6 X 25 Z1		4	
10	E 928 110 501 02	fuel line intake		1	
11	928 110 502 02	fuel line return		1	
12	N 021 071 2	banjo bolt		1	
13	* 900 123 005 20	sealing ring A 12 X 16		2	
14	928 110 287 00	bracket for fuel line		1	
15	999 511 116 02	clamp		4	
16	900 075 014 02	hexagon-head bolt M 6 X 18		2	
17	928 110 243 00	connecting piece		1	
18	999 512 087 02	hose clamp S 95/9		2	
19	930 110 173 00	vacuum limiter		1	
20	928 110 175 00	hose		1	

Pos	Part Number	Name	Remarks	Qty	Model
21	999 512 045 02	hose clamp S 22/9		2	
22	928 110 178 00	hose		1	
23	999 512 552 00	hose clamp S 25/9		6	
24	928 110 511 00	vacuum hose warm-up valve throttle housing		2	
25	928 110 357 00	hose air guide housing auxiliary air regulator		1	
26	999 512 038 02	hose clamp S28/9		2	
27	930 110 271 01	t-piece 5-4-5		1	
-	999 239 003 40	hose 3,2 X 7		*	
28	-	500 MM		1	
29	-	650 MM		1	
-	000 043 204 94	hose 4 X 10		*	
30	-	150 MM vacuum unit t-socket throttle housing		2	
31	930 110 292 00	plug		1	(S)(AUS)
32	900 075 347 02	screw M 6 X 28		2	
33	911 110 364 00	compression spring		3	
34	900 031 011 02	washer 6,4		2	
35	N 010 220 3	hexagon-head bolt M 6 X 28		1	
-	928 110 196 02	support	83	1	
-	N 014 740 2	pan-head screw M 6 X 16	83	2	
-	928 110 217 03	support		1	M 481

- -- E N D -- -

Model	Year	MG	SG	Illustration	Restrictions	Update				
928	86	1	07	107-10		179	14:15	01.09.2004	PORSCHE	PET	PORSCHE

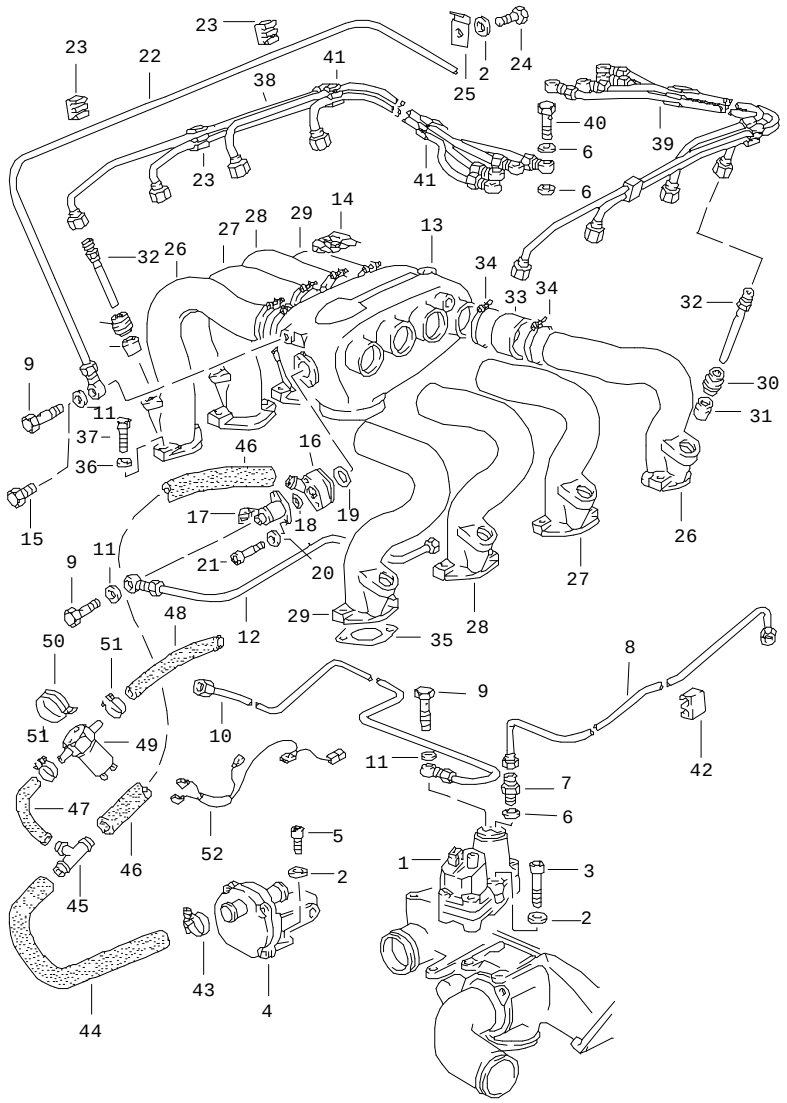

Pos	Part Number	Name	Remarks	Qty	Model
		k-jetronic 3	83		M28.11/12
1	928 606 109 04	warm-up valve		1	
2	N 011 524 7	washer A 6,4		7	
3	N 014 719 2	pan-head screw M 6 X 50		2	
4	930 606 102 00	auxiliary air regulator		1	
5	N 014 740 2	pan-head screw M 6 X 16		2	
6	* 900 123 144 30	sealing ring A 10 X 13,5		17	
7	999 105 013 02	screw socket		1	
8	928 110 189 04	fuel line intake warm-up valve		1	
9	911 110 899 00	banjo bolt		3	
10	928 110 190 02	fuel line return warm-up valve		1	
11	* 900 123 115 30	sealing ring A 8 X 11,5		7	
12	928 110 194 01	fuel line intake start valve		1	
13	928 110 086 00	intake distributor		1	
14	928 110 403 00	emblem		1	
15	900 083 047 02	hexagon-head bolt M 8 X 1 X 10		1	M28.11
16	911 110 264 00	intermediate piece for start valve		1	
17	911 606 107 01	start valve		1	
18	* 999 701 395 50	o-ring		1	

Pos	Part Number	Name	Remarks	Qty	Model
19	* 999 701 210 40	o-ring 20 - 2,5		1	
20	900 025 003 02	washer A 5,3		2	
21	E 900 067 150 02	pan-head screw M 5 X 32		2	
22	928 110 087 01	vacuum line	AUT.	1	
23	928 110 150 00	terminal	AUT.	4	
24	999 072 005 09	hexagon-head bolt M 6 X 12	AUT.	1	
25	900 264 001 02	clip	AUT.	1	
26	928 110 295 00	intake manifold cylinder 1 and cyl. 8		2	
27	928 110 296 00	intake manifold cylinder 2 and cyl. 7		2	
28	928 110 297 00	intake manifold cyl. 3 and cyl. 6		2	
29	928 110 298 00	intake manifold cyl. 4 and cylinder 5		2	
30	928 110 399 02	tensioning sleeve		8	
31	928 110 398 00	sleeve for injector valve		8	
32	928 110 225 00	injector valve		8	
33	928 110 241 00	rubber sleeve		8	
34	999 512 348 02	hose clamp 40-60/9		16	
35	* 928 110 330 03	gasket		8	
35	* 928 110 330 03	gasket without asbestos		8	
36	900 025 007 02	washer A 8,4		16	
37	N 010 335 5	hexagon-head bolt M 8 X 35		16	
38	928 110 028 00	injection line cyl. 1 - 4	/R	1	
39	928 110 027 00	injection line cyl. 5 - 8	/L	1	
40	930 110 547 00	banjo bolt		8	
41	928 110 149 00	terminal		4	
42	928 110 148 01	terminal		2	
43	999 512 552 00	hose clamp S 25/9		2	
44	928 110 181 01	hose		1	
45	999 137 014 40	t-piece		1	
46	928 110 179 01	hose		1	
-	N 020 359 1	hose 9 X 2,5		1	
47	-	180 MM			
48	-	150 MM			
49	928 606 215 01	electric air valve		1	
50	999 511 124 02	clip		1	
51	N 023 570 2	hose clamp		2	
52	928 612 181 00	wiring harness		1	

- -- E N D -- -

Model	Year	MG	SG	Illustration	Restrictions	Update				
928	86	1	07	107-11		179	14:15	01.09.2004	PORSCHE	PET	PORSCHE

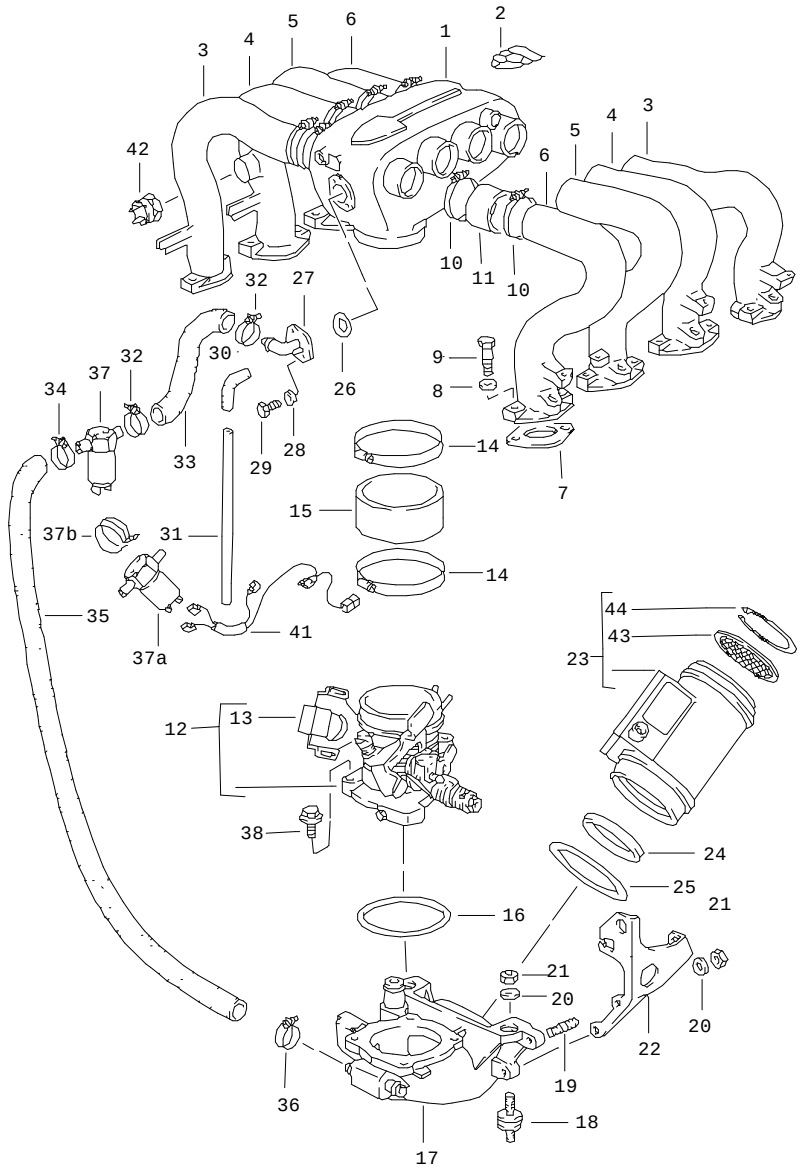

Pos	Part Number	Name	Remarks	Qty	Model
		lh-jetronic 1	84-		M28.21/22
1	928 110 086 01	intake distributor		1	
2	928 110 403 00	emblem		1	
3	928 110 681 01	intake manifold cylinder 1 and cyl. 8		2	
4	928 110 682 02	intake manifold cylinder 2 and cyl. 7		2	
5	928 110 683 01	intake manifold cyl. 3 and cyl. 6		2	
6	928 110 684 01	intake manifold cyl. 4 and cylinder 5		2	
7	* 928 110 330 03	gasket		8	
7	* 928 110 330 03	gasket without asbestos		8	
8	900 025 007 02	washer A 8,4		16	
9	N 010 335 5	hexagon-head bolt M 8 X 35		16	
10	999 512 348 02	hose clamp 40 - 60/9		16	
11	928 110 241 00	rubber sleeve		8	
12	928 110 099 03	throttle housing		1	
13	944 606 113 01	throttle-valve switch		1	
14	999 512 350 02	hose clamp 80-100/9		2	
15	928 110 243 00	connecting piece		1	
16	999 701 436 40	o-ring 91 X 4		1	

Pos	Part Number	Name	Remarks	Qty	Model
17	928 110 098 03	air guide housing		1	
18	928 110 191 00	bonded rubber buffer		3	
19	999 062 055 02	stud BM 6 X 12		2	
20	N 011 524 7	washer A 6,4		13	
21	900 076 010 02	hexagon nut M 6		5	
22	928 110 217 03	support		1	
23	> 928 606 141 00	mass air flow		1	
24	999 701 183 50	sealing ring		1	
25	999 701 699 40	sealing ring		1	
26	999 701 210 40	o-ring		1	
27	928 110 168 01	connection piece		1	
28	900 025 003 02	washer A 5,3		2	
29	900 075 145 02	hexagon-head bolt M 5 X 16		2	
30	928 574 717 02	hose		1	
-	N 020 139 11	pipe 4 X 1		X	
31	-	2220 MM	/LL	1	
(31)	-	2100 MM	/LR	1	
32	N 023 570 2	hose clamp A 9 X 15 ZY		2	
-	N 020 359 1	hose 9 X 2,5		X	
33	-	290 MM		1	
34	N 023 570 2	hose clamp S 17/9 ZY		1	
35	928 110 653 01	hose		1	
36	900 272 003 02	hose clamp S 19/9 ZY		1	
37	944 606 215 00	electric air valve		1	
37A	928 606 215 01	electric air valve		1	M 240
37B	999 511 124 02	clip		1	
38	900 075 341 02	screw M 6 X 25		4	
41	928 612 181 00	wiring harness		1	
42	928 606 218 00	temperature switch		1	
43	928 110 901 00	strainer		2	
44	928 110 902 00	circlip		2	

- -- E N D -- -

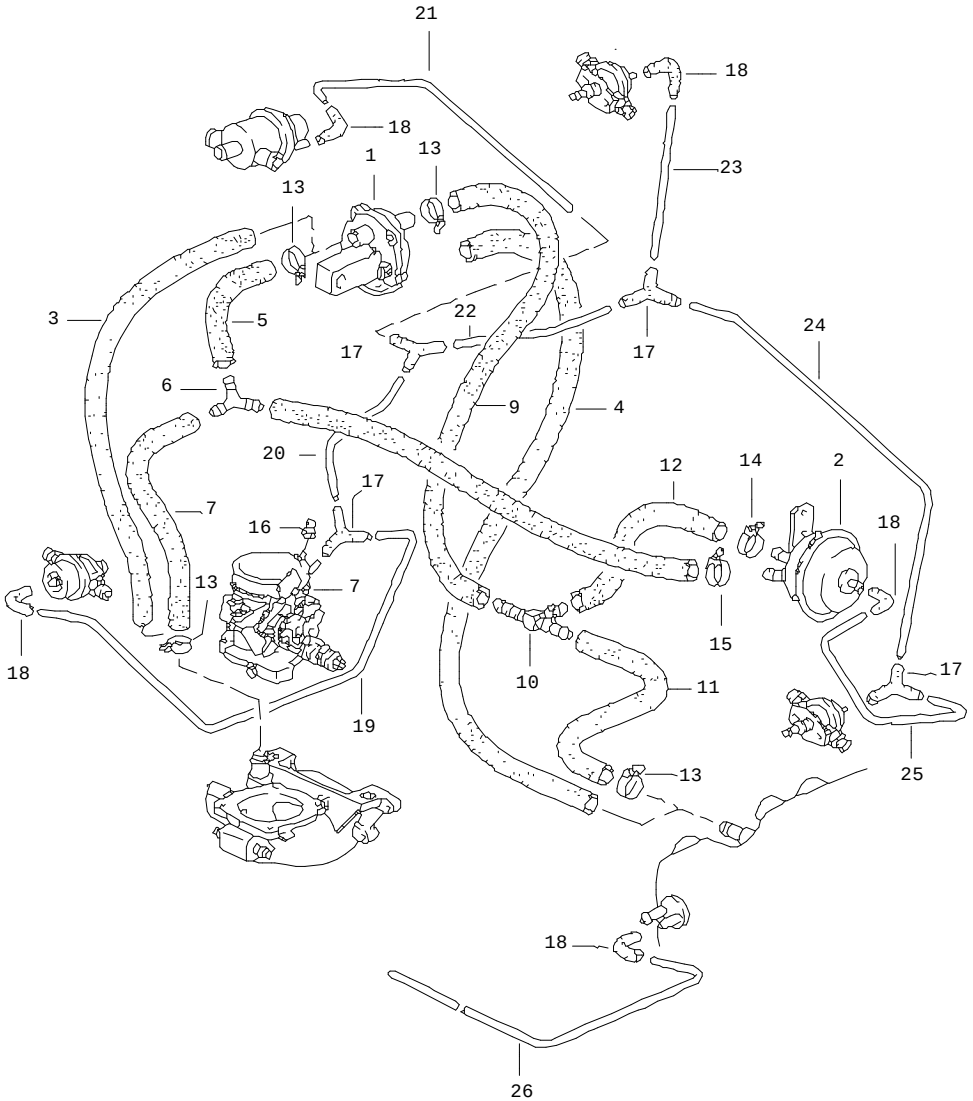

Pos	Part Number	Name	Remarks	Qty	Model
		lh-jetronic 2	84-		M28.21/22
1	928 606 102 03	auxiliary air regulator		1	
2	930 110 173 00	vacuum limiter		1	(CH)(S) (AUS)
3	928 110 442 00	hose		1	
4	928 110 445 01	hose		1	
5	E 928 110 172 00	hose		1	(CH) (AUS)
(5)	928 110 667 00	hose		1	
6	E 999 137 041 40	y-piece		1	(CH)(S) (AUS)
7	928 110 179 01	hose		1	(CH)(S) (AUS)
(7)	928 110 174 00	hose		1	
8	999 239 009 40	hose		1	(CH)(S) (AUS)
9	928 110 181 01	hose		1	(CH)(S) (AUS)
10	999 137 039 40	t-piece		1	(CH)(S) (AUS)
11	928 110 174 01	hose		1	(CH)(S) (AUS)
12	928 110 175 02	hose		1	(CH)(S) (AUS)
13	N 023 570 2	hose clamp A 9 X 15 ZY		4	
14	999 512 045 02	hose clamp S 22/9		1	(CH)(S) (AUS)
15	999 512 374 02	hose clamp SGT 20 - 32		1	(CH)(S) (AUS)
16	930 110 292 00	plug		1	
17	928 573 727 02	distributing piece		X	

Pos	Part Number	Name	Remarks	Qty	Model
18	928 574 717 02	hose		X	
-	N 020 139 11	pipe 4 X 1		*	
19	-	380 MM		1	
20	-	60 MM		1	
21	-	300 MM		1	
22	-	220 MM		1	
23	-	90 MM		1	
24	-	270 MM		1	
25	-	180 MM		1	(CH)(S) (AUS)
26	-	2220MM		1	
		- -- E N D -- -			

Model	Year	MG	SG	Illustration	Restrictions	Update	14:16	01.09.2004	PORSCHE	PET	PORSCHE
928	86	1	07	107-13		179					

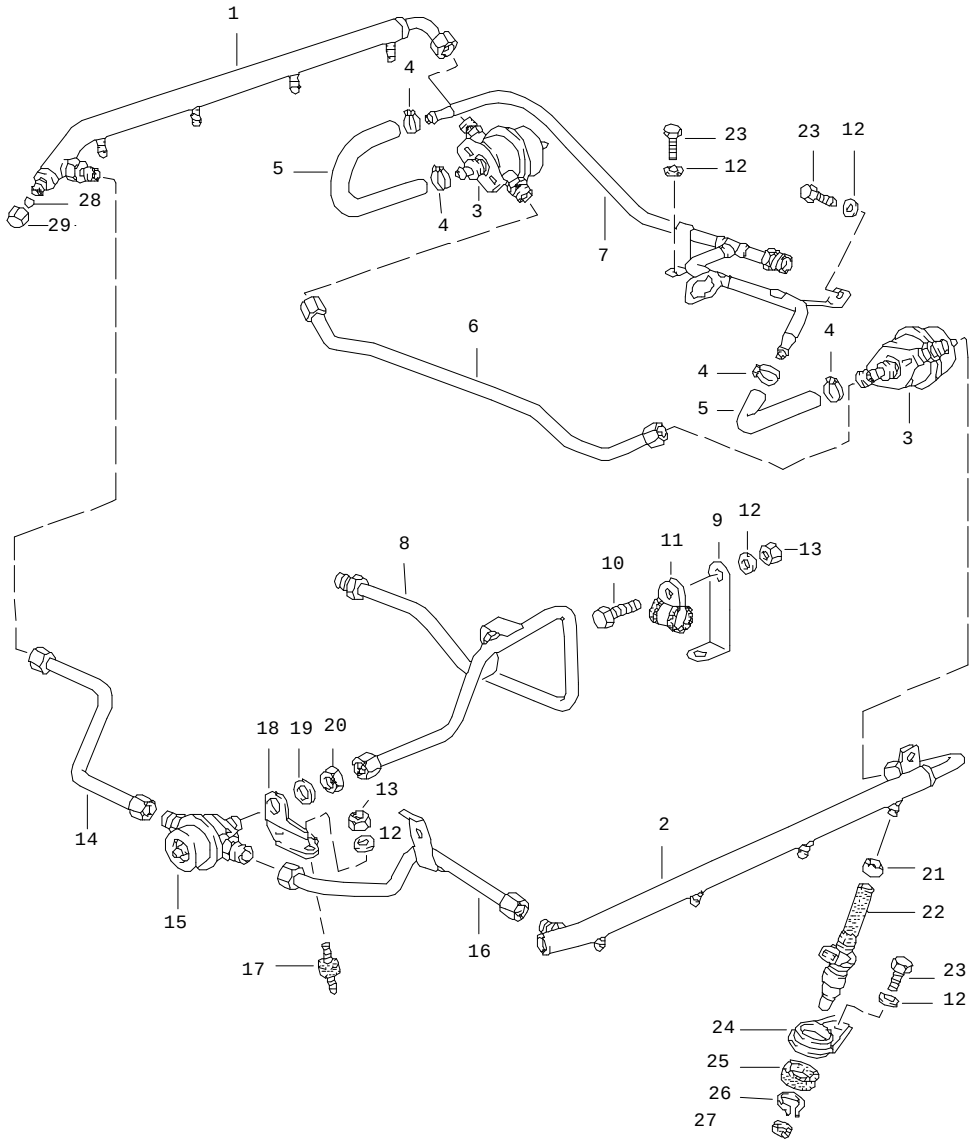

Pos	Part Number	Name	Remarks	Qty	Model
		lh-jetronic 3	84-		M28.21/22
1	E 928 110 080 03	injection tube	/R	1	
2	928 110 079 06	injection tube	/L	1	
3	928 110 198 01	pressure regulator		2	
4	999 512 160 02	hose clamp S 13/9		4	
5	928 110 359 00	hose elbow		2	
6	928 110 374 06	fuel line		1	
7	928 110 369 07	fuel line return line		1	
8	928 110 367 07	fuel line feed line		1	
9	928 110 287 03	bracket		1	
10	N 010 217 9	hexagon-head bolt M 6 X 20		1	
11	999 511 116 02	clamp		1	
12	N 011 524 7	washer A 6,4		X	
13	900 076 010 02	hexagon nut		X	
14	928 110 378 03	feed line		1	
15	928 110 202 00	diaphragm damper		1	
16	928 110 377 04	feed line		1	
17	E 999 689 001 00	bonded rubber mounting		2	
18	928 110 409 02	support		1	
19	900 025 020 02	washer A 17		1	
20	900 034 013 02	hexagon nut BM 16 X 1,5		1	
21	928 110 351 00	hose sleeve		8	
22	928 606 119 00	injector valve		8	

Pos	Part Number	Name	Remarks	Qty	Model	Pos	Part Number	Name	Remarks	Qty	Model
23	999 072 005 09	hexagon-head bolt M 6 X 12		10							
24	022 133 271	pressure plate		8							
25	311 133 263	injector locating bush outer		8							
26	900 041 012 01	circlip 22 X 1,2		8							
27	311 133 261 A	injector locating bush inner		8							
28	900 108 022 00	ball 9 MM		1							
29	928 110 475 01	cap nut M 12 X 1,5		1							
-	928 110 903 00	repair kit		8							
		- -- E N D -- -									

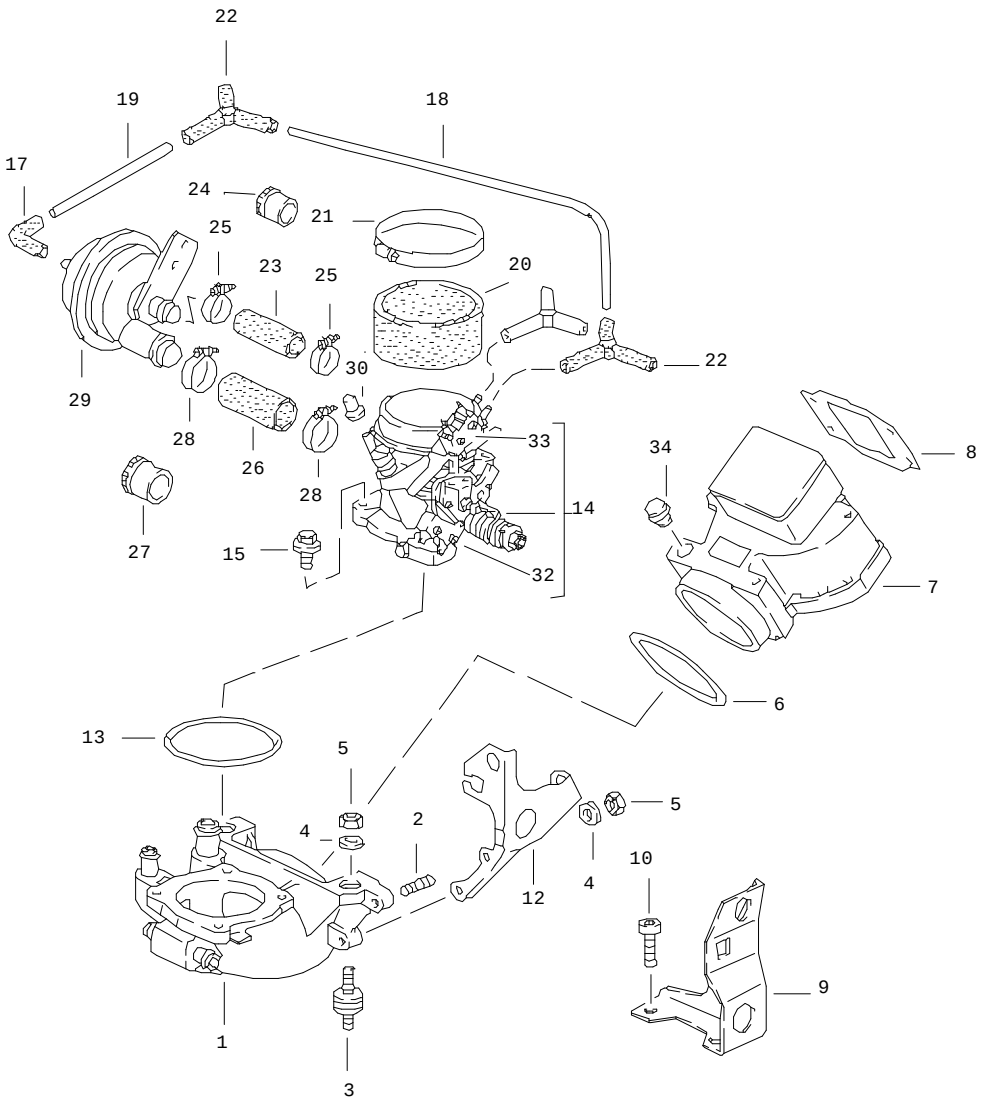

Pos	Part Number	Name	Remarks	Qty	Model
		l-jetronic 1	-84		M28.19/20 (USA)(CDN) (J)
1	928 110 098 04	air guide housing		1	
2	999 062 055 02	stud BM 6 X 12		2	
3	928 110 191 00	bonded rubber buffer		3	
4	N 011 524 7	washer A 6,4		13	
5	900 076 010 02	hexagon nut M 6		5	
6	999 701 599 40	sealing ring		1	
7	928 606 121 02	mass air flow		1	
8	928 110 201 01	sealing frame		1	
12	928 110 217 03	support	83-	1	M28.20 (J)
13	* 999 701 436 40	o-ring 91 X 4		1	
14	928 110 090 20	throttle housing		1	
15	900 075 341 02	screw M 6 X 25 Z1		4	
17	928 574 717 02	hose		1	M28.19
-	N 020 139 1	hose 4 X 1		*	
18	-	60 MM		1	M28.19
19	-	150 MM		1	M28.19
20	928 110 248 01	connecting piece		1	
21	999 512 226 02	hose clamp S 88/9		2	
22	928 573 727 02	distributing piece		X	
23	928 110 175 00	hose		1	M28.19
24	999 703 171 40	cap 14 X 15		1	M28.20

Pos	Part Number	Name	Remarks	Qty	Model
25	999 512 045 02	hose clamp S 22/9		2	M28.19
26	928 110 178 00	hose		1	M28.19
27	999 703 172 40	cap 18 X 15		1	M28.20
28	999 512 552 00	hose clamp S 25/9		2	M28.19
29	E 928 110 173 01	vacuum limiter		1	M28.19
30	930 110 292 00	plug		1	
32	E 928 606 131 00	microswitch lower		1	
33	928 606 131 01	microswitch upper		1	
34	928 606 221 00	plug		1	
		- -- E N D -- -			

Pos	Part Number	Name	Remarks	Qty	Model

Model	Year	MG	SG	Illustration	Restrictions	Update				
928	86	1	07	107-20		179	14:16	01.09.2004	PORSCHE	PET	PORSCHE

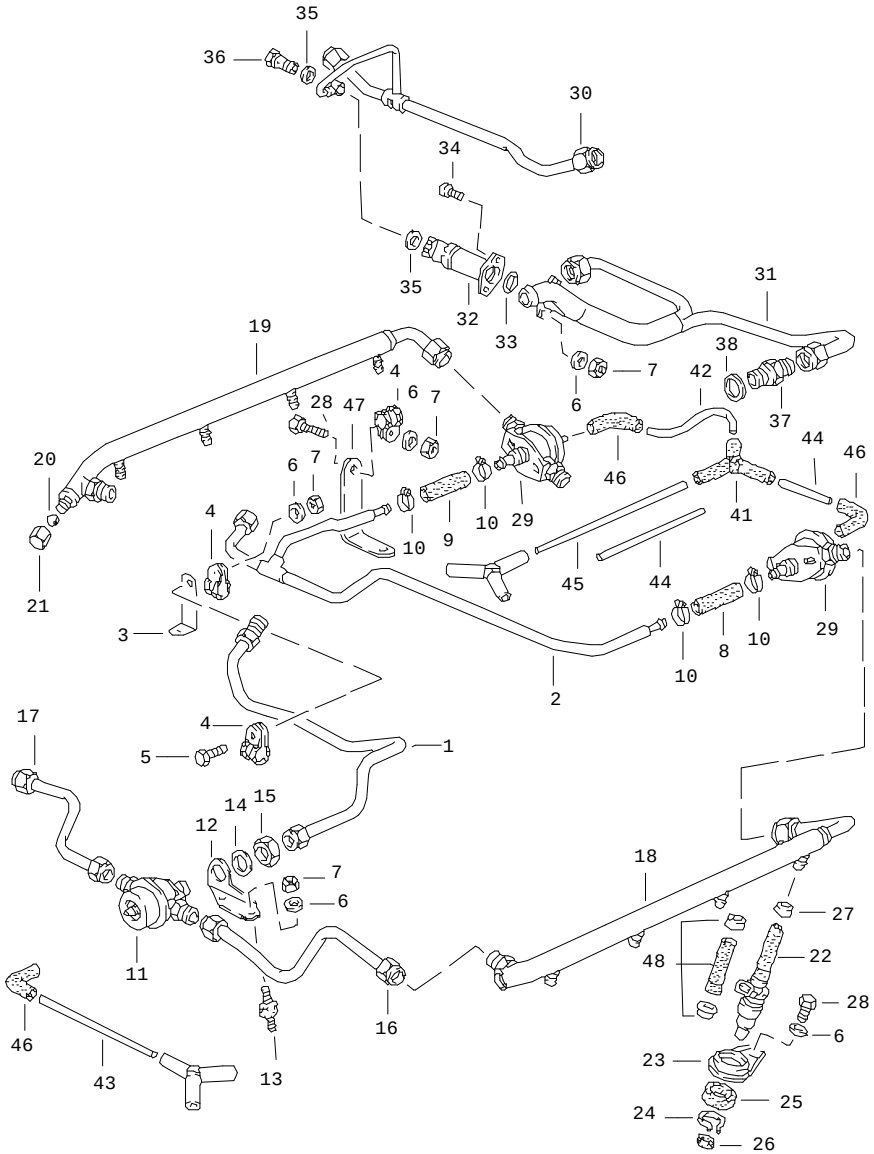

Pos	Part Number	Name	Remarks	Qty	Model
		l-jetronic 2	-84		M28.19/20 (USA)(CDN) (J)
1	928 110 367 07	fuel line intake pressure regulator		1	
2	928 110 369 06	fuel line return pressure regulator		1	
3	928 110 287 03	bracket		1	
4	999 511 116 02	clamp		2	
5	900 075 014 02	hexagon-head bolt M 6 X 18		1	
6	N 011 524 7	washer A 6,4		2	
7	900 076 010 02	hexagon nut M 6		4	
-	999 181 152 50	hose 7,5 X 13,5		*	
8	-	65 MM 90 MM		1 1	
9	-	115 MM		1	
10	999 512 160 02	hose clamp S 13/9		4	
11	928 110 202 00	diaphragm damper		1	
12	928 110 409 02	support		1	
13	E 999 689 001 00	bonded rubber mounting		2	
14	900 025 020 02	washer A 17		1	
15	900 034 013 02	hexagon nut BM 16 X 1,5		1	
16	928 110 377 04	feed line	/L	1	
17	928 110 378 03	feed line	/R	1	
18	928 110 079 06	injection tube		1	

Pos	Part Number	Name	Remarks	Qty	Model
19	E 928 110 080 03	injection tube		1	
20	900 108 022 00	ball		1	
21	928 110 475 01	cap nut M 12 X 1,5		1	
22	928 606 110 01	injector valve		8	
23	022 133 271	pressure plate		8	
24	900 041 012 01	circlip 22 X 1,2		8	
25	311 133 263	injector locating bush outer		8	
26	311 133 261 A	injector locating bush inner		8	
27	928 110 351 00	hose sleeve		8	
28	900 075 057 02	hexagon-head bolt M 6 X 12		8	
29	928 110 198 01	pressure regulator		2	
30	928 110 374 05	fuel line		1	
31	928 110 419 01	distributor line		1	
32	911 606 107 01	start valve		1	
33	* 999 701 395 50	o-ring 7 X 2 B		1	
34	900 067 009 02	pan-head screw M 6 X 15		2	
35	* 900 123 115 30	sealing ring 8 X 11,5		2	
36	911 110 899 00	banjo bolt		1	
37	900 915 005 02	connection piece		2	
38	* 900 123 018 30	sealing ring		2	
39	928 606 125 01	temperature sensor		1	
40	900 123 101 30	sealing ring		1	
41	928 573 727 02	distributing piece		1	
-	N 020 139 1	hose 4 X 1		*	
42	-	90 MM		1	
43	-	180 MM		1	
44	-	270 MM		2	M28.19
45	-	360 MM		1	M28.20
46	928 574 717 02	hose		3	
47	928 110 449 01	bracket		1	
-	928 110 903 00	repair kit		8	
		- -- E N D -- -			

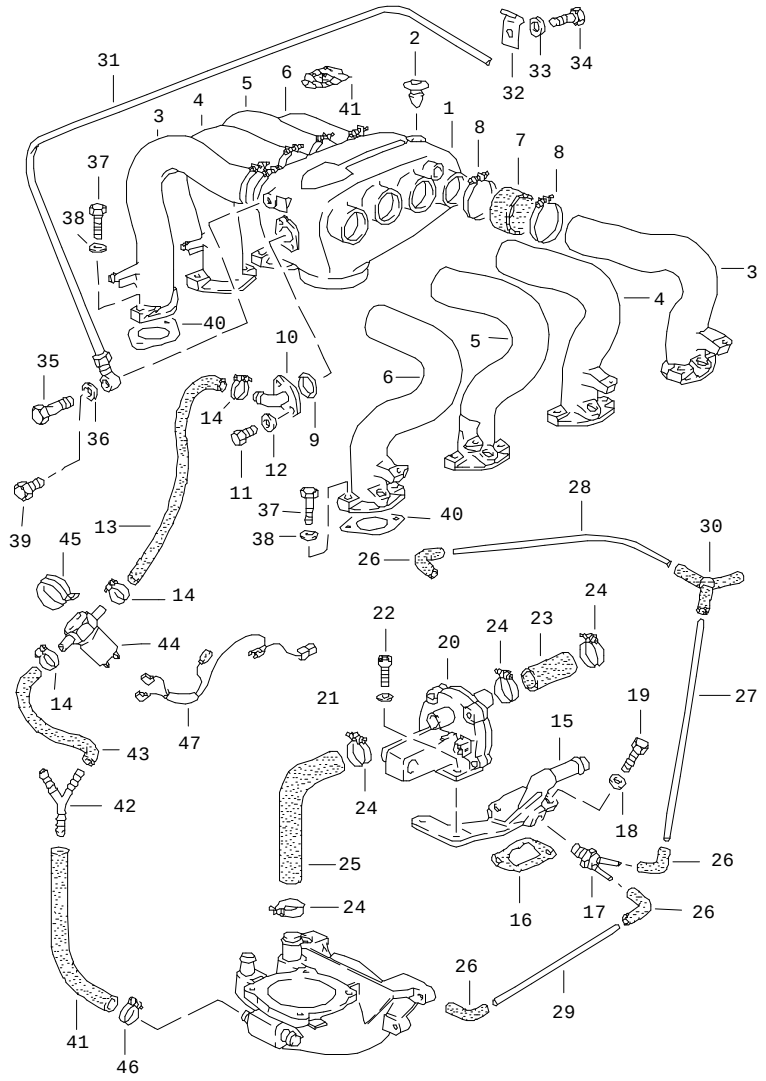

Pos	Part Number	Name	Remarks	Qty	Model
		l-jetronic 3	-84		M28.19/20 (USA)(CDN) (J)
1	928 110 056 02	intake distributor		1	
2	E 999 703 165 40	plug		1	
3	928 110 213 01	intake manifold cylinder 1 and cyl. 8		2	
4	928 110 214 00	intake manifold cylinder 2 and cyl. 7		2	
5	928 110 215 01	intake manifold cyl. 3 and cyl. 6		2	
6	928 110 216 00	intake manifold cyl. 4 and cylinder 5		2	
7	928 110 158 01	rubber sleeve		8	
8	999 512 348 02	hose clamp 40-60/9		16	
9	* 999 701 210 40	o-ring 20 X 2,5		1	
10	928 110 168 00	adapter		1	
11	900 075 145 02	hexagon-head bolt M 5 X 16		2	
12	900 025 003 02	washer A 5,3		2	
-	N 020 359 1	hose		*	
13	-	290 MM		1	
14	N 023 570 2	hose clamp S 15/9		2	
15	928 104 061 01	adapter cyl. 1 - 4		1	

Pos	Part Number	Name	Remarks	Qty	Model
16	928 106 197 02	gasket		1	
17	058 131 851 A	thermo valve		1	
18	900 025 007 02	washer A 8,4		2	
19	900 075 079 02	hexagon-head bolt M 8 X 22		2	
20	E 928 606 102 02	auxiliary air regulator		1	
21	N 011 524 7	washer A 6,4		2	
22	N 014 740 2	pan-head screw M 6 X 16		2	
23	999 239 009 40	hose		1	
24	999 512 552 00	hose clamp S 25/9		4	
25	928 110 442 00	hose		1	
26	928 574 717 02	hose		4	
-	N 020 139 1	hose		*	
27	-	360 MM		1	
28	-	430 MM		1	M28.19
(28)	-	720 MM		1	M28.20
29	-	450 MM		1	
30	928 573 727 02	distributing piece		1	
31	928 110 087 01	vacuum line	AUT.	1	
32	900 264 001 02	clip	AUT.	1	
33	N 011 524 7	washer A 6,4	AUT.	1	
34	999 072 005 09	hexagon-head bolt M 6 X 12	AUT.	1	
35	911 110 899 00	banjo bolt	AUT.	1	
36	900 123 115 30	sealing ring A 8 X 11,5	AUT.	2	
37	N 010 335 5	hexagon-head bolt M 8 X 35		16	
38	900 025 007 02	washer A 8,4		16	
39	900 083 047 02	hexagon-head bolt M 8 X 1 X 10		1	
40	928 110 330 03	gasket		8	
-	999 239 011 40	hose 12 X 9		X	
41	-	220 MM			
42	928 110 273 00	y-piece		1	
-	N 020 359 1	hose 9 X 2,5		X	
43	-	150 MM			
44	928 606 215 01	electric air valve		1	
45	999 511 124 02	clip		1	
46	900 272 003 02	hose clamp		1	
47	928 612 181 00	wiring harness		1	
		- -- E N D -- -			

Model	Year	MG	SG	Illustration	Restrictions	Update				
928	86	1	07	107-30		179	14:17	01.09.2004	PORSCHE	PET	PORSCHE

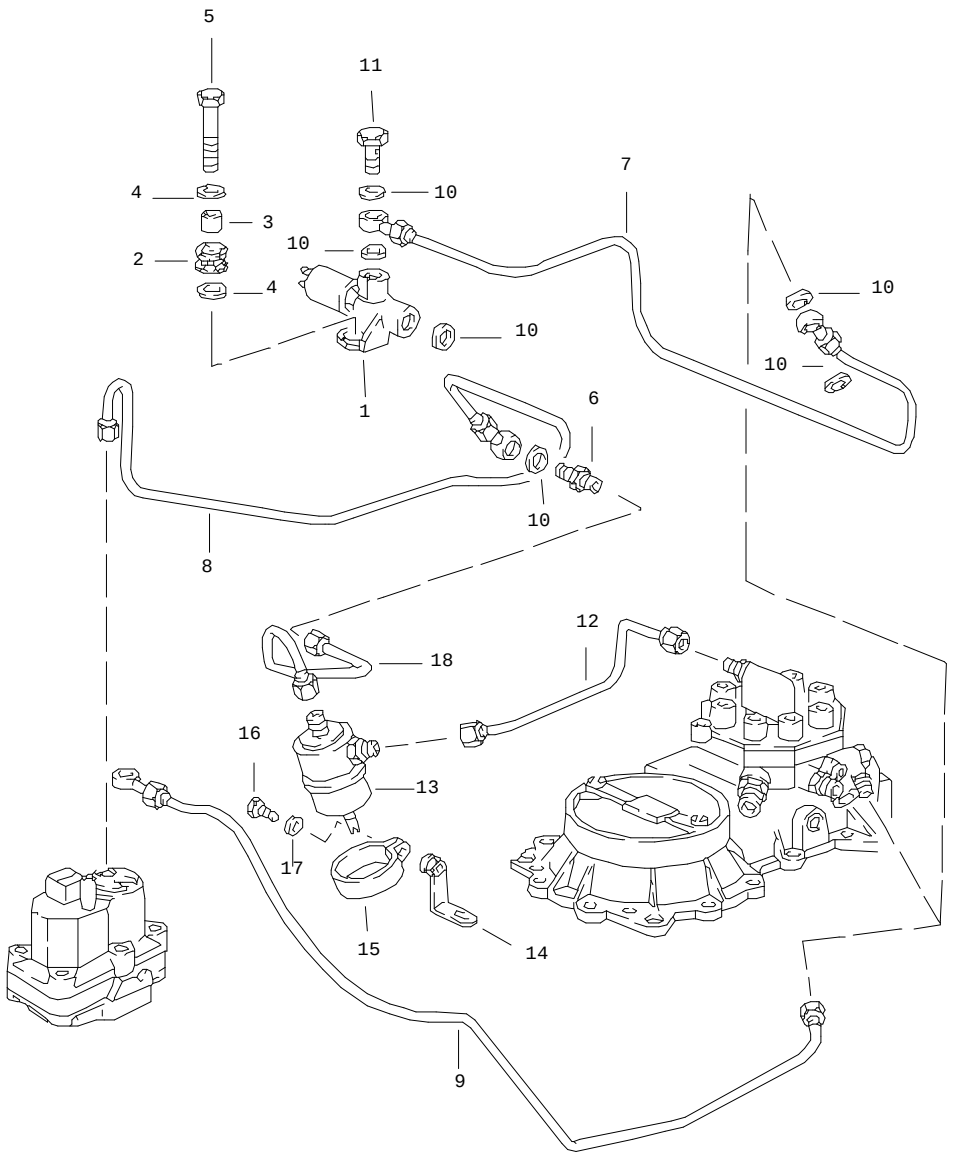

Pos	Part Number	Name	Remarks	Qty	Model
		control pressure lowering	83		M28.11/12
1	928 605 103 00	solenoid valve with distributing piece		1	
2	928 110 244 00	rubber sleeve		1	
3	928 110 245 00	spacer sleeve		1	
4	999 025 072 02	washer 8,1 X 19 X 2		2	
5	900 074 040 02	hexagon-head bolt M 8 X 50		1	
6	900 176 001 02	connection piece		2	
7	928 110 234 02	fuel line		1	
8	928 110 189 04	fuel line		1	
9	928 110 190 02	fuel line		1	
10	N 013 830 7	sealing ring A 8 X 12		6	
11	911 110 899 00	banjo bolt		3	
12	928 110 505 01	fuel line		1	
13	928 110 231 02	diaphragm damper		1	
14	928 110 525 00	support		1	
15	999 511 132 02	clamp 38/15		1	
16	999 072 005 09	hexagon-head bolt M 6 X 12		1	
17	N 011 524 7	washer A 6 X 4		1	
18	928 110 503 00	fuel line		1	
		- -- E N D -- -			

Model	Year	MG	SG	Illustration	Restrictions	Update				
928	86	1	07	107-32		179	14:17	01.09.2004	PORSCHE	PET	PORSCHE

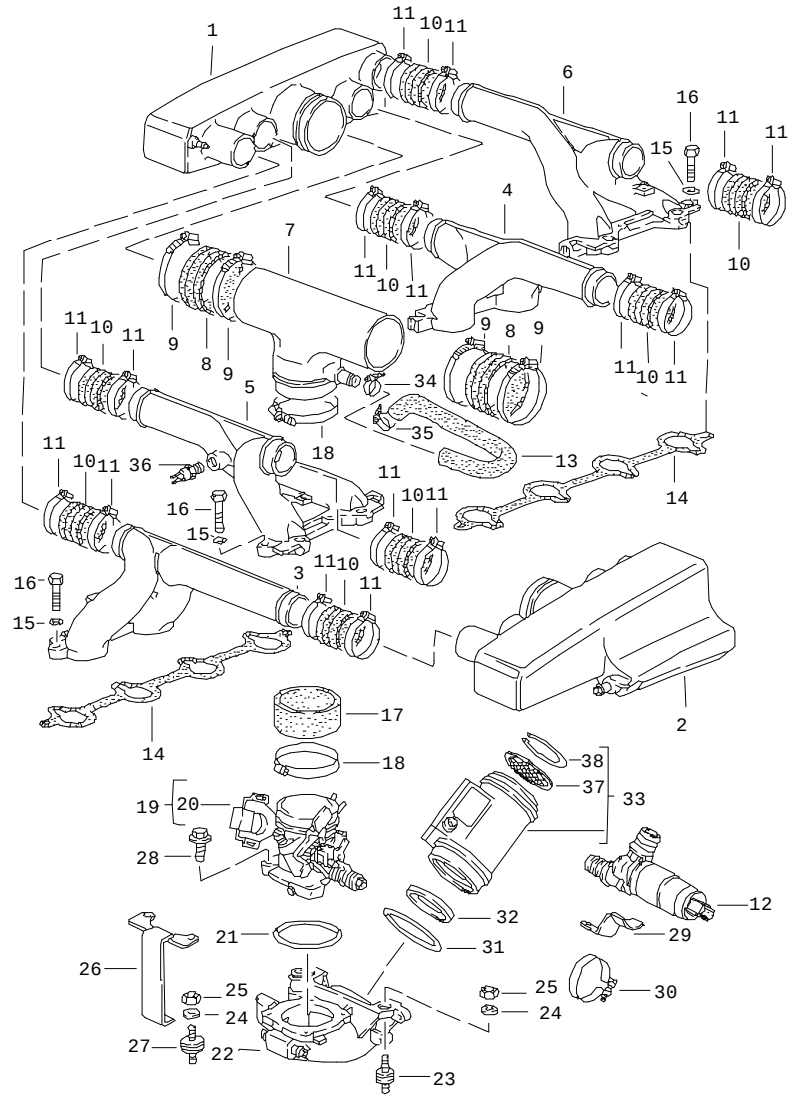

Pos	Part Number	Name	Remarks	Qty	Model
		lh-jetronic 1	85- 86		M28.43/44 M28.45/46
1	928 110 554 02	distributor housing cyl. 1 - 4		1	
2	928 110 056 21	distributor housing cyl. 5 - 8		1	
3	928 110 636 00	intake manifold cylinder 1 and cylinder 2		1	
4	928 110 636 01	intake manifold cyl. 3 and cyl. 4		1	
5	928 110 635 00	intake manifold cylinder 5 and cyl. 6		1	
6	928 110 635 01	intake manifold cyl. 7 and cyl. 8		1	
7	928 110 119 01	connecting tube		1	
8	928 110 347 00	rubber sleeve		2	
9	999 512 350 02	hose clamp		4	
10	928 110 343 00	rubber sleeve		8	
11	999 512 349 02	hose clamp		16	
12	928 606 161 00	idle-speed adjuster		1	
13	928 110 174 08	connecting hose		1	
14	928 110 566 01	gasket		2	
14	928 110 566 04	gasket M >> 81G 00450 M >> 81G 05899 M >> 89G 00094 M >> 89G 05153		2	 M28.43 M28.44 M28.45 M28.46

Pos	Part Number	Name	Remarks	Qty	Model
(14)	928 110 568 00	gasket M 81G 00451 >> M 81G 05900 >> M 89G 00095 >> M 89G 05154 >>		4	 M28.43 M28.44 M28.45 M28.46
15	900 025 054 0A	washer A 8,4		10	
16	N 010 335 5	hexagon-head bolt M 8 X 35		8	
17	928 110 248 03	rubber sleeve		1	
18	999 512 539 00	hose clamp		2	
19	928 110 099 14	throttle housing		1	
20	944 606 113 01	throttle-valve switch		1	
21	999 701 436 40	o-ring 91 X 4		1	
22	928 110 098 05	air guide housing		1	
23	928 110 191 00	bonded rubber buffer		2	
(23)	928 110 191 03	bonded rubber buffer		1	
24	N 011 524 7	washer A 6,4		4	
25	900 076 010 02	hexagon nut M 6		4	
26	928 110 287 05	retaining bracket		1	
27	930 110 579 01	bonded rubber buffer		1	
28	900 075 341 02	screw M 6 X 25		4	
29	928 110 409 05	retaining bracket		1	
30	999 512 369 02	clip		1	
31	999 701 699 40	sealing ring		1	
32	999 701 183 50	sealing ring		1	
33	> 928 606 141 00	mass air flow		1	
34	999 512 552 00	hose clamp		1	
35	999 512 374 02	hose clamp		1	
36	928 606 217 00	temperature switch		1	
37	928 110 901 00	strainer		2	
38	928 110 902 00	circlip		2	

- -- E N D -- -

Model	Year	MG	SG	Illustration	Restrictions	Update				
928	86	1	07	107-34		179	14:17	01.09.2004	PORSCHE	PET	PORSCHE

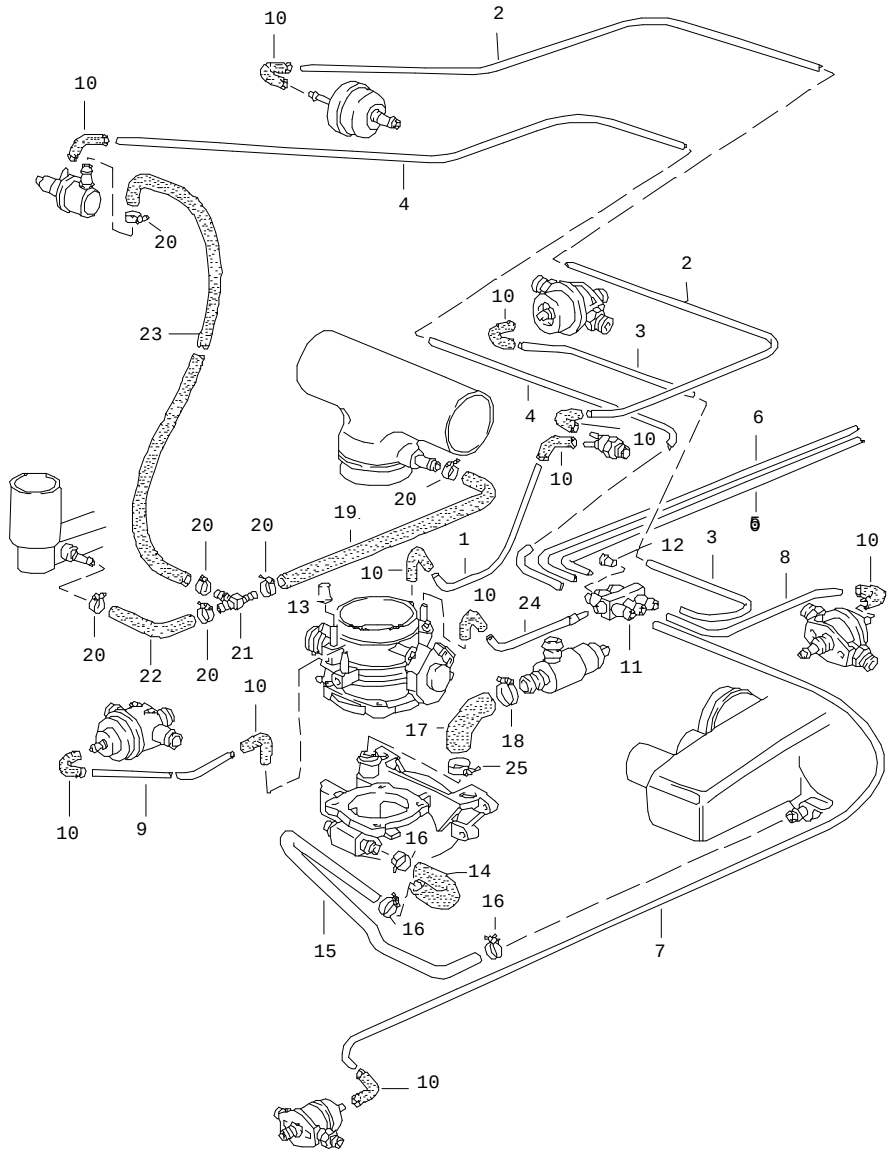

Pos	Part Number	Name	Remarks	Qty	Model
		lh-jetronic 2	85- 86		M28.43/44 M28.45/46
-	N 020 139 1	hose 4 X 1		*	
1	-	350 MM		1	
2	-	330 MM		1	
3	-	220 MM		1	
4	-	650 MM		1	
5	-	1270 MM		1	
6	-	450 MM		1	M28.44/46
7	-	605 MM		1	
8	-	220 MM		1	
9	-	500 MM		1	
10	928 574 717 02	hose		10	
11	928 110 441 02	distributing piece		1	
12	900 312 012 02	plug		1	M28.43/45
13	930 110 292 00	plug		1	
14	928 110 761 01	hose elbow		1	
15	928 110 759 01	pipeline		1	
16	999 512 554 00	hose clamp SGT 12 - 22/9		3	
17	928 110 442 05	hose elbow		1	
18	999 512 374 02	hose clamp SGT 20 - 32		1	
19	928 110 602 00	hose		1	
20	N 023 570 2	hose clamp A 9/15 ZY		6	
21	999 137 044 40	t-piece		1	
22	928 107 601 00	hose		1	
23	928 110 673 00	hose		1	

Model	Year	MG	SG	Illustration	Restrictions	Update			
928	86	1	07	107-34		179	14:17	01.09.2004	PORSCHE PET PORSCHE

Pos	Part Number	Name	Remarks	Qty	Model	Pos	Part Number	Name	Remarks	Qty	Model
24	928 110 014 00	pipeline 5 X 1 X 300		1							
25	999 512 552 00	hose clamp S 25/9 ZY		1							
		- -- E N D -- -									

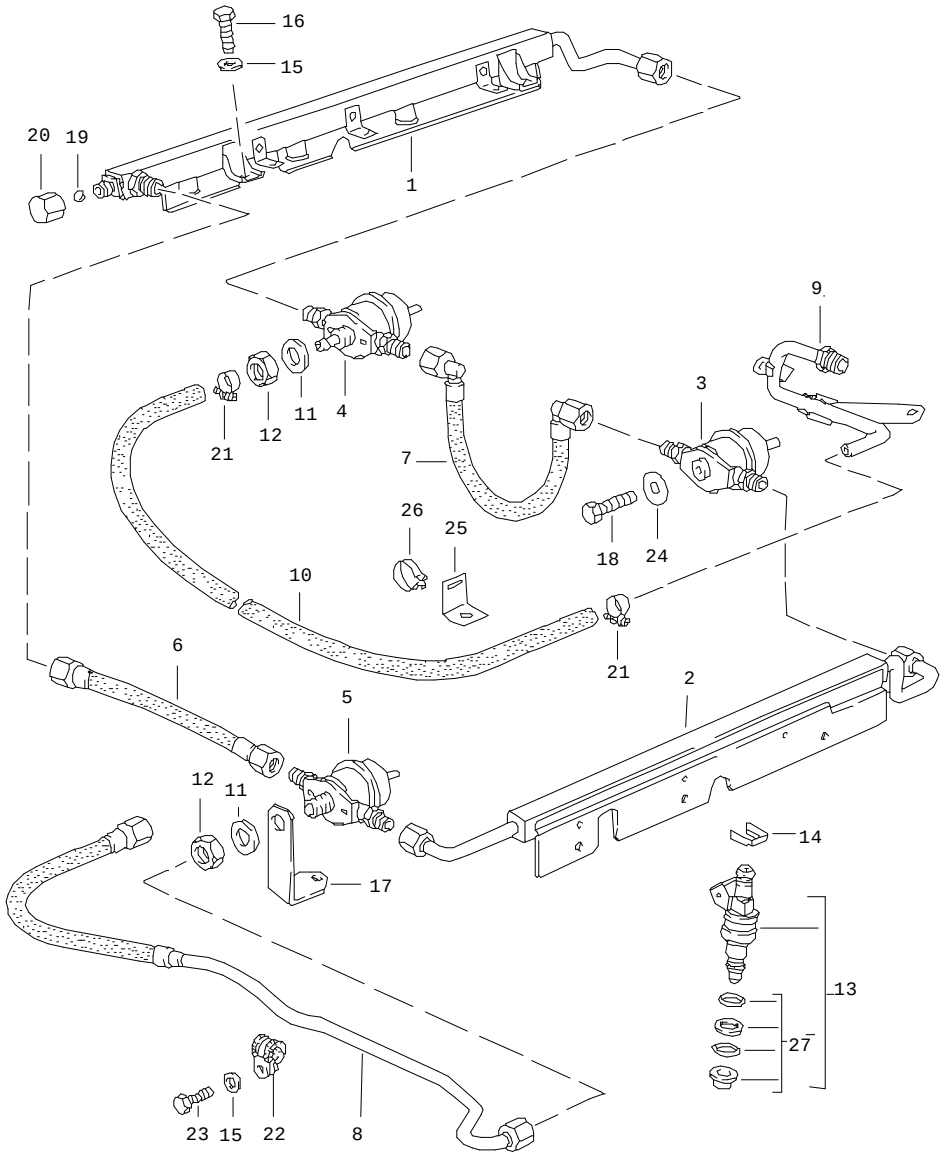

Pos	Part Number	Name	Remarks	Qty	Model
		lh-jetronic 3	85- 86		M28.43/44 M28.45/46
		see technical information GRP.2 NR.1/85			
1	928 110 080 11	injection tube	/R	1	
2	928 110 079 11	injection tube	/L	1	
3	930 110 602 00	diaphragm damper		1	
4	928 110 198 01	pressure regulator		1	
5	928 110 202 00	diaphragm damper		1	
6	928 110 269 01	fuel hose		1	
7	928 110 271 00	fuel hose		1	
8	928 110 367 14	fuel line feed line		1	
9	928 110 369 13	fuel line return line		1	
10	999 181 152 50	hose 440 MM		1 *	
11	900 025 020 02	washer A 17		2	
12	900 034 013 02	hexagon nut M 16 X 1,5		2	
13	928 606 120 00	injector valve		8	
14	930 110 388 00	retaining clip		8	
15	N 011 524 7	washer A 6,4		5	
16	900 075 355 0A	hexagon-head bolt M 6 X 16		4	
17	928 110 525 01	support		1	
18	N 010 237 6	hexagon-head bolt M 8 X 12		1	
19	900 108 022 00	ball 9 MM		1	

Pos	Part Number	Name	Remarks	Qty	Model
20	928 110 475 01	cap nut M 12 X 1,5		1	
21	999 512 160 02	hose clamp S 13/9		2	
22	999 511 116 02	clamp hexagon-head bolt		1 1	
23	999 072 005 09	hexagon-head bolt		1	
24	944 110 312 00	washer		1	
25	477 971 881 A	retaining bracket		1	
26	113 142 261 A	clip		1	
27	944 110 901 00	gasket set		8	
		- -- E N D -- -			

Pos	Part Number	Name	Remarks	Qty	Model

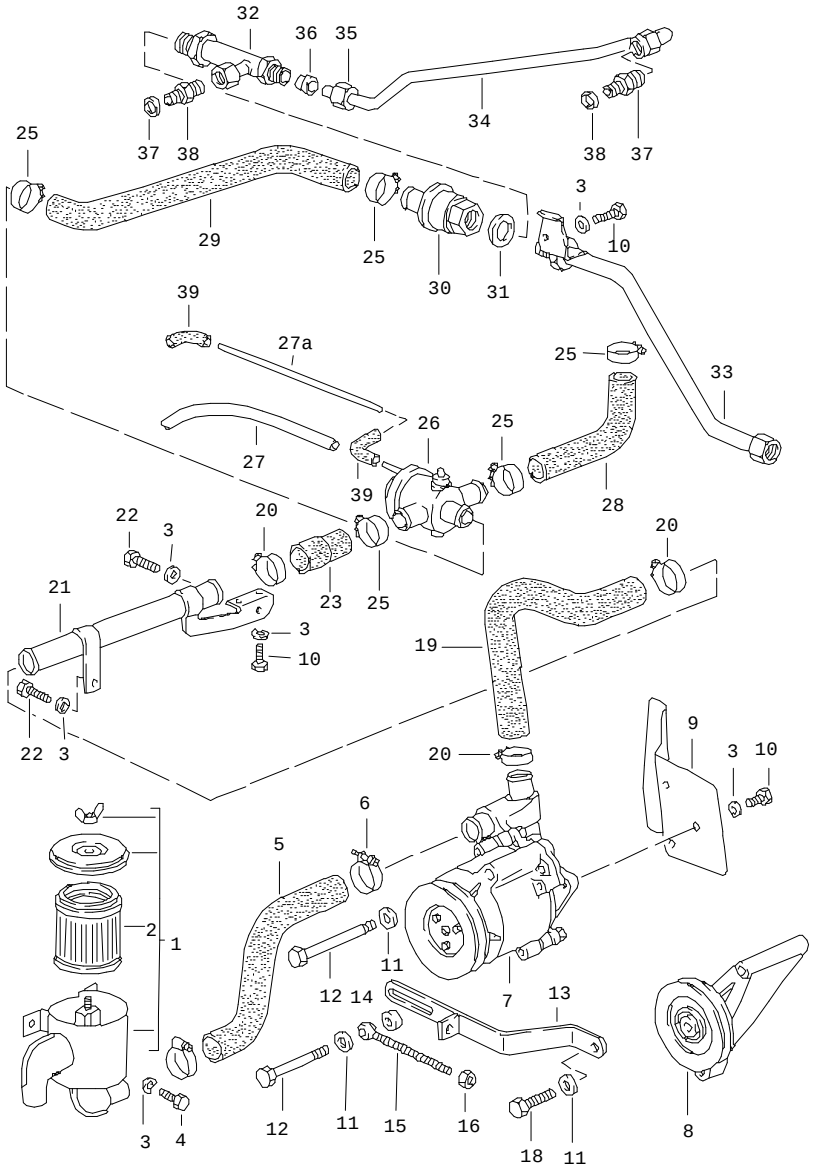

Pos	Part Number	Name	Remarks	Qty	Model
		air injection			
1	928 113 145 00	air cleaner		1	
2	928 113 445 00	filter cartridge		1	
3	N 011 524 7	washer A 6,4		9	
4	900 075 310 02	hexagon-head bolt M 6 X 12SB		4	
5	928 113 155 00	hose		1	
6	999 512 044 02	hose clamp SR 32/ZY		2	
7	928 113 109 04	air pump		1	M28.11/12
7	928 113 017 00	air pump		1	M28.19/20 M28.21/22 M28.43/44 M28.45/46
8	928 106 080 02	belt tension roller		1	(J)
9	928 113 125 05	cover plate		1	
10	999 072 005 09	hexagon-head bolt M 6 X 12		6	
11	900 025 007 02	washer A 8,4		3	
12	900 074 049 02	screw M 8 X 110		1	
13	928 113 113 10	strut for air pump		1	
14	999 025 075 02	washer 8,5 X 19 X 6		1	
15	999 460 002 02	eye screw		1	
16	900 076 025 02	hexagon nut M 8		1	
17	900 075 033 02	hexagon-head bolt M 8 X 40		1	
18	900 075 079 02	hexagon-head bolt M 8 X 22		1	

Pos	Part Number	Name	Remarks	Qty	Model
(19)	928 113 139 09	hose		1	
(19)	928 113 139 07	hose		1	M28.43/44 M28.45/46
20	999 512 038 02	hose clamp		3	
21	928 113 141 03	air tube		1	
22	900 075 057 02	hexagon-head bolt M 6 X 16		2	
23	E 928 113 149 00	hose		1	
25	999 512 237 02	hose clamp S 26/9		5	
26	930 113 147 01	diverter valve		1	
-	999 239 003 40	hose 3,2 X 7		*	
27	-	400 MM		1	
28	928 113 159 02	hose air cleaner		1	
(28)	928 113 159 02	hose air cleaner		1	M28.43/44 M28.45/46
29	928 113 140 03	hose check valve		1	M28.11/12 M28.21/22
(29)	928 113 140 05	hose check valve		1	M28.19/20
30	911 113 115 01	check valve		1	
31	900 123 060 30	sealing ring A 24 X 29		1	
32	928 113 136 00	air tube	/R	1	M28.11/12 M28.21/22
33	928 113 146 01	air tube		1	M28.19/20
(33)	928 113 146 03	air tube	86	1	M28.45/46
34	928 113 135 03	air tube	/L	1	M28.11/12 M28.21/22
35	900 104 020 02	union nut		2	M28.11/12 M28.21/22
36	N 020 823 1	cutting ring		1	M28.11/12 M28.21/22
37	900 123 018 30	sealing ring		2	M28.11/12
38	900 915 005 02	connection piece		2	M28.11/12
39	928 574 717 02	hose		2	

- -- E N D -- -

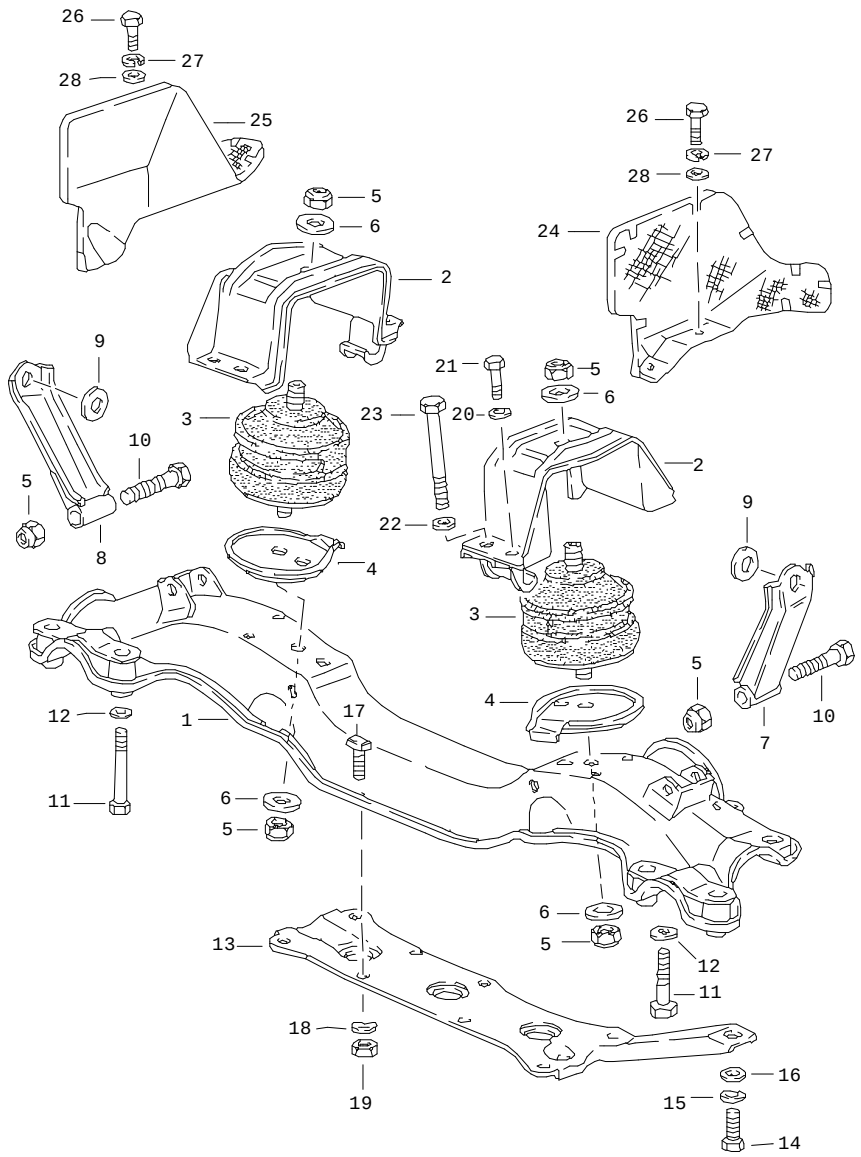

Pos	Part Number	Name	Remarks	Qty	Model
		engine suspension			
1	A 928 375 011 06	engine carrier	/LL -85	1	
1	928 375 011 06	engine carrier	/LL	1	
(1)	A 927 375 011 06	engine carrier	/RL -85	1	
(1)	927 375 011 06	engine carrier	/RL	1	
2	928 375 069 01	engine bracket		2	
3	928 375 039 00	hydraulic mount		2	
4	928 375 371 00	stop plate		2	
5	900 910 046 02	lock nut M 12 X 1,5		4	
6	999 025 091 02	washer		4	
7	928 375 063 00	bracket	/L	1	
8	928 375 064 00	bracket	/R	1	
9	928 375 211 00	washer		2	
10	N 010 156 3	hexagon-head bolt M 12 X 1,5 X 70		2	
11	N 010 455 3	screw M 10 X 55		2	
12	928 375 212 00	washer		2	
13	928 375 109 01	reinforcement plate	/LL	1	
(13)	927 375 021 00	reinforcement plate	/RL	1	
14	900 075 043 02	hexagon-head bolt M 10 X 30	/LL	1	
14	900 075 043 02	hexagon-head bolt M 10 X 30	/RL	2	
15	900 025 008 09	washer B 10	/LL	1	
15	900 025 008 09	washer B 10	/RL	2	
16	900 223 011 02	washer B 10,5	/LL	1	

Pos	Part Number	Name	Remarks	Qty	Model
16	900 223 011 02	washer B 10,5	/RL	2	
17	928 375 125 00	t-headed screw		4	
18	N 012 241 8	spring washer B 8		4	
19	900 910 022 02	lock nut M 8		4	
20	900 025 007 02	washer A 8,4		4	
21	N 010 335 5	hexagon-head bolt M 8 X 35		4	
22	052 103 377	washer		4	
23	N 010 482 3	hexagon-head bolt M 10 X 105		4	
24	928 375 067 01	cover plate	/L	1	
25	928 375 068 01	cover plate	/R	1	
26	900 075 057 02	hexagon-head bolt M 6 X 16		4	
27	N 012 006 4	lock ring B 6		4	
28	900 223 003 02	washer 6,4		4	
		- -- E N D -- -			

Pos	Part Number	Name	Remarks	Qty	Model

Model	Year	MG	SG	Illustration	Restrictions	Update		
928	86	1	98	REP		179	15:25	01.09.2004

Pos	Part Number	Name	Remarks	Qty	Model
		repair kits			
>>	> 928 100 901 01	set of seals		1	M28.11/12/19 M28.20/21/22
		engine comprising:			
-	900 123 115 30	sealing ring A 8 X 11,5		4	
-	900 123 033 20	sealing ring A 10 X 13,5 CU		17	
-	900 123 005 20	sealing ring A 12 X 16		2	
-	900 123 118 30	sealing ring A 22 X 27		3	
-	999 113 275 40	shaft seal A 20 X 30 X 7		1	
-	900 123 007 30	sealing ring A 14 X 18		2	
-	900 123 149 70	sealing ring A 22 X 29		1	
-	900 123 015 30	sealing ring A 30 X 36		1	
-	900 123 018 30	sealing ring A 16 X 20		4	
-	900 123 140 30	sealing ring A 18 X 22		13	
-	900 123 115 30	sealing ring A 8 X 11,5		3	
-	900 123 055 30	sealing ring A 12 X 16		2	
-	900 123 060 30	sealing ring A 24 X 29		2	
-	900 123 143 70	sealing ring A 48 X 55		1	
-	928 104 193 12	valve stem seal		16	
-	928 101 207 00	oil sump gasket		1	
-	928 104 361 07	cylinder head gasket cyl. 1 - 4		1	
-	928 104 362 07	cylinder head gasket cyl. 5 - 8		1	
-	928 105 184 00	sealing ring		2	

Model	Year	MG	SG	Illustration	Restrictions	Update		
928	86	1	98	REP		179	15:25	01.09.2004

Pos	Part Number	Name	Remarks	Qty	Model
-	928 105 189 02	gasket		2	
-	944 105 199 03	gasket camshaft housing		2	
-	928 106 134 05	gasket		1	
-	928 106 197 04	gasket regulator housing		2	
-	928 107 136 04	sealing ring		1	
-	928 107 707 04	gasket		1	
-	928 107 711 00	gasket		1	
-	928 110 330 03	gasket		8	
-	928 111 193 12	gasket		8	
-	928 113 179 01	gasket		2	
-	928 602 103 00	sealing ring		1	
-	928 603 135 01	sealing ring		1	
-	928 606 213 03	gasket		1	
-	930 110 122 00	sealing ring		1	
-	930 110 394 00	gasket		1	
-	999 113 264 40	radial sealing ring 90 X 110 X 12		1	
-	999 113 263 40	shaft seal 60 X 85 X 10		1	
-	999 113 282 40	shaft seal 30 X 47 X 7		2	
-	999 701 210 40	o-ring 20 X 2,5		1	
-	999 701 395 50	o-ring 7 X 2		1	
-	999 701 425 40	o-ring 50 X 4		1	
-	999 701 633 40	o-ring 98 X 3		1	
-	999 701 436 40	o-ring 91 X 4 X 63		1	
-	928 107 169 01	gasket 29,2 X 3		1	
-	999 701 592 40	o-ring 23 X 2		2	

Model	Year	MG	SG	Illustration	Restrictions	Update		
928	86	1	98	REP		179	15:25	01.09.2004

Pos	Part Number	Name	Remarks	Qty	Model
-	999 701 602 40	o-ring 50 X 5		2	
-	999 701 627 40	o-ring 53 X 7		1	
-	999 701 632 40	o-ring 65 X 5		1	
>>	> 928 100 901 02	set of seals engine comprising:		1	M28.43/44 M28.45/46
-	900 123 118 30	sealing ring A 22 X 27		3	
-	999 113 275 40	shaft seal A 20 X 30 X 7		1	
-	900 123 007 30	sealing ring A 14 X 18		2	
-	900 123 149 70	sealing ring A 22 X 29		1	
-	900 123 050 30	sealing ring A 8 X 11,5		3	
-	900 123 055 30	sealing ring A 12 X 16		2	
-	900 123 060 30	sealing ring A 24 X 29		2	
-	900 123 143 70	sealing ring A 48 X 55		1	
-	928 104 601 07	valve stem seal		32	
-	928 101 207 00	oil sump gasket		1	
-	928 104 367 02	cylinder head gasket cyl. 1 - 4		1	
-	928 104 368 02	cylinder head gasket cyl. 5 - 8		1	
-	928 106 134 03	gasket		1	
-	928 106 227 00	gasket		2	
-	928 107 136 04	sealing ring		1	
-	928 107 303 07	filler neck		1	
-	999 701 653 40	o-ring		1	
-	928 110 566 01	gasket		2	

Model	Year	MG	SG	Illustration	Restrictions	Update		
928	86	1	98	REP		179	15:25	01.09.2004

Pos	Part Number	Name	Remarks	Qty	Model
-	928 110 568 00	gasket		4	
-	944 111 205 00	sealing ring		8	
-	928 606 213 03	gasket		1	
-	928 110 243 02	connecting hose		1	
-	999 113 264 40	radial sealing ring 90 X 110 X 12		1	
-	928 603 135 03	sealing ring		1	
-	999 113 263 40	shaft seal 60 X 85 X 10		1	
-	999 113 282 40	shaft seal		2	
-	999 701 633 40	o-ring 98 X 3		1	
-	999 701 436 40	o-ring 91 X 4 X 63		1	
-	928 107 169 01	gasket		1	
-	999 701 627 40	o-ring 53 X 7		1	
-	999 701 632 40	o-ring 65 X 5		1	
-	N 043 811 1	sealing ring C 38 X 44		2	
-	928 105 319 02	sealing ring		6	
-	928 106 167 01	gasket		2	
-	999 701 731 40	o-ring		22	
-	900 123 050 30	sealing ring		6	
-	928 104 447 06	gasket		2	
-	928 104 443 08	sealing ring		8	
-	900 174 044 40	round seal		1	
>>	> 928 104 903 00	cylinder head set of seals comprising:		1	M28.43/44 M28.45/46
-	928 104 367 02	cylinder head gasket		1	
-	928 104 368 02	cylinder head gasket		1	
-	928 105 215 00	cover		6	
-	928 105 205 00	support		6	

Model	Year	MG	SG	Illustration	Restrictions	Update		
928	86	1	98	REP		179	15:25	01.09.2004

Pos	Part Number	Name	Remarks	Qty	Model
-	900 123 050 30	sealing ring		8	
-	999 113 282 40	shaft seal		2	
-	944 111 205 00	sealing ring		8	
-	928 110 566 01	gasket		2	
-	928 110 568 00	gasket		4	
-	999 701 731 40	o-ring		22	
-	928 104 447 06	gasket		2	
-	928 104 443 08	sealing ring		8	
-	928 104 417 02	washer		22	
-	928 106 227 00	gasket		2	
>>	> 928 101 901 02	set of crankshaft bearings 1 set comprising:		1	
-	928 101 115 02 002	main bearing shell		3	
-	928 101 115 03 002	main bearing shell		3	
-	928 101 133 03	thrust bearing		2	
-	928 101 117 08	main bearing bush i		1	
>>	> 928 101 901 52	set of crankshaft bearings 1 set undersize 0,25 mm comprising:		1	
-	928 101 115 50	main bearing shell		3	
-	928 101 115 51	main bearing shell		3	
-	928 101 133 53	thrust bearing		2	
-	928 101 117 58	main bearing bush i		1	
>>	> 928 101 901 62	set of crankshaft bearings 1 set undersize 0,50 mm comprising:		1	
-	928 101 115 60	main bearing shell		3	
-	928 101 115 61	main bearing shell		3	
-	928 101 133 63	thrust bearing		2	
-	928 101 117 68	main bearing bush i		1	

Model	Year	MG	SG	Illustration	Restrictions	Update		
928	86	1	98	REP		179	15:25	01.09.2004

Pos	Part Number	Name	Remarks	Qty	Model
>>	> 928 101 901 07	set of crankshaft bearings 1 set comprising:		1	
-	928 101 115 02 002	main bearing shell		3	
-	928 101 115 03 002	main bearing shell		3	
-	928 101 142 02 002	thrust bearing		2	
-	928 101 117 08	main bearing bush i		1	
>>	> 928 101 901 57	set of crankshaft bearings 1 set undersize 0,25 mm comprising:		1	
-	928 101 115 50	main bearing shell		3	
-	928 101 115 51	main bearing shell		3	
-	928 101 142 54	thrust bearing		2	
-	928 101 117 58	main bearing bush i		1	
>>	> 928 101 901 67	set of crankshaft bearings 1 set undersize 0,50 mm comprising:		1	
-	928 101 115 60	main bearing shell		3	
-	928 101 115 61	main bearing shell		3	
-	928 101 142 64	thrust bearing		2	
-	928 101 117 68	main bearing bush i		1	
>>	> 928 100 931 03	maintenance parts for periodic maintenance comprising:		1	M28.11/12
-	999 170 156 90	spark plug		8	
-	928 107 201 05	oil filter		1	
-	900 123 011 30	sealing ring		1	
-	928 110 147 05	fuel filter		1	
-	928 110 185 03	air cleaner cartridge		1	
-	928 113 445 00	filter cartridge		1	

Model	Year	MG	SG	Illustration	Restrictions	Update		
928	86	1	98	REP		179	15:25	01.09.2004

Pos	Part Number	Name	Remarks	Qty	Model
>>	> 928 100 931 05	maintenance parts for periodic maintenance comprising:		1	M28.21/22 M28.43-46
-	999 170 156 90	spark plug		8	
-	928 107 201 05	oil filter		1	
-	900 123 011 30	sealing ring		1	
-	928 110 253 06	fuel filter		1	
-	928 110 185 01	air cleaner cartridge		1	
-	928 113 445 00	filter cartridge		1	
>>	> 928 103 906 11	set of piston rings 1 set 97,00 MM		X	M28.11/12/19 M28.20/21/22
>>	> 928 103 906 12	set of piston rings 1 set 97,50 MM		X	M28.11/12/19 M28.20/21/22
>>	> 928 103 906 03	set of piston rings 1 set 98,00 MM		X	M28.11/12/19 M28.20/21/22
>>	> 928 103 906 04	set of piston rings 1 set - KS - 100,00 MM		X	M28.43/44 M28.45/46
>>	> 928 103 906 05	set of piston rings 1 set - KS - 100,50 MM		X	M28.43/44 M28.45/46
>>	> 928 103 906 06	set of piston rings 1 set - KS - 101,00 MM		X	M28.43/44 M28.45/46
>>	> 000 043 202 57	subsequent installation for AU		1	M28.45/46 (D)
		- -- E N D -- -			

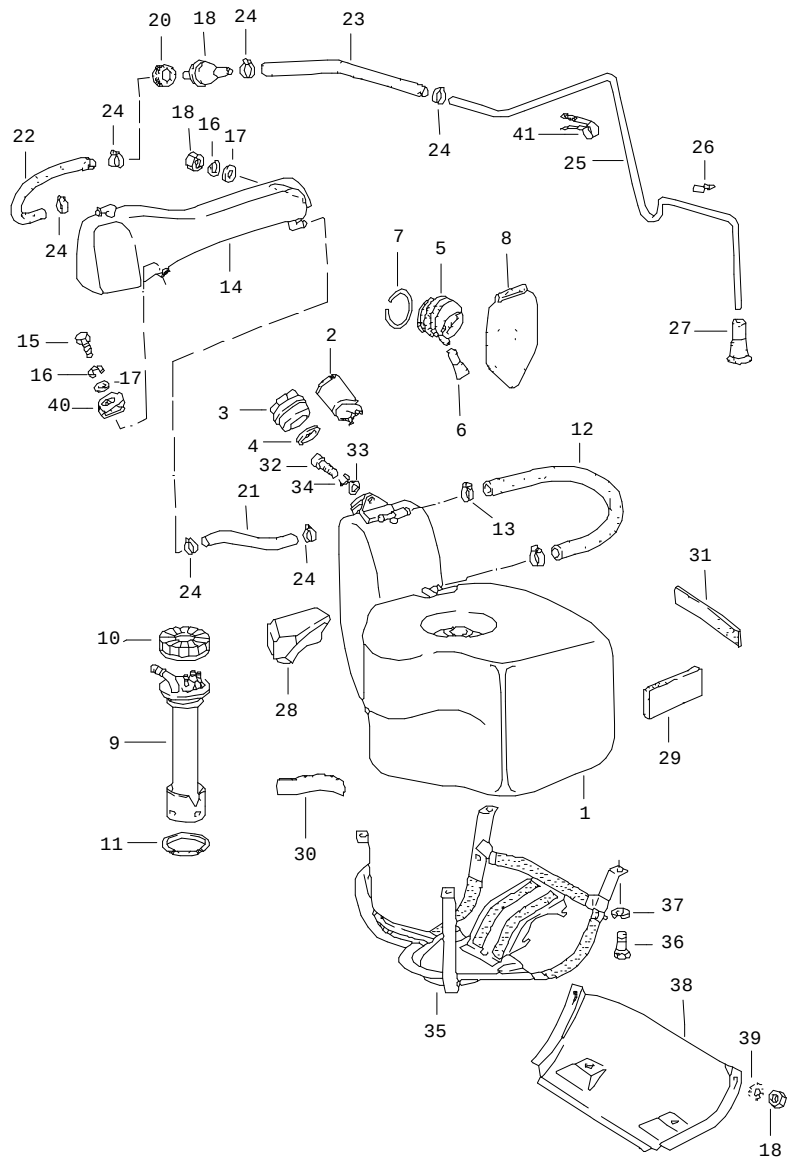

Pos	Part Number	Name	Remarks	Qty	Model
		fuel tank container			
1	928 201 003 05	fuel tank		1	
1	928 201 003 08	fuel tank for (USA) (CDN) use also: POS.2		1	
2	928 201 027 03	insert		1	
3	928 201 901 03	fuel tank cap with stipulated lock-no. state lock number		1	
(3)	928 201 903 02	fuel tank cap w/o stipulated lock number		1	
4	928 201 275 03	sealing ring		1	
5	928 201 333 02	grommet		1	
6	928 201 255 02	drain bush		1	
7	900 906 046 00	outer ring		1	
8	928 201 057 02	protective flap filler neck		1	
9	928 641 030 01	tank gauge fuel tank		1	
10	113 201 375	union nut		1	
11	928 201 327 02	gasket tank gauge		1	
12	928 201 194 02	breather hose		1	
13	N 023 565 3	hose clamp S 21/9		2	
14	928 201 013 07	compensating tank		1	
15	900 075 014 02	hexagon-head bolt M 6 X 18		2	
16	N 012 006 4	lock ring B 6		2	
17	N 011 524 7	washer A 6,4		2	

Pos	Part Number	Name	Remarks	Qty	Model
18	900 076 010 02	hexagon nut M 6		4	
19	928 201 083 02	shut-off valve		1	
20	928 201 197 02	grommet		1	
-	999 181 716 50	hose 9,5 X 15,5		*	
21	-	250 MM		1	
22	-	580 MM		1	
23	-	640 MM		1	
24	N 023 569 2	hose clamp AR 16/9 ZY		6	
25	928 201 135 03	ventilation tube		1	
26	928 201 343 04	clip		2	
27	928 201 195 02	end piece		1	
28	928 201 107 02	desk pad		1	
29	928 201 345 02	spacer		1	
-	999 911 227 40	strap		*	
30	-	210 MM		1	
31	-	290 MM		2	
32	N 014 707 2	pan-head screw M 8 X 15		1	
33	900 025 007 02	washer A 8,4		1	
34	900 142 002 01	lock ring A 8		1	
35	928 201 313 03	tank covering lower F >>92DS8 41924 F >>92DS8 62068		1	
(35)	E 928 201 313 04	tank covering lower F 92DS8 41925>> F 92DS8 62069>>		1	
36	N 010 246 4	hexagon-head bolt M 8 X 45		4	
37	900 027 015 02	lock ring B 8		4	
38	928 201 145 03	cover lower		1	
39	N 042 121 3	shake-proof washer A 6,4		2	
40	999 507 328 02	captive nut		1	
41	928 201 343 04	clip		3	
-	928 201 373 03	cover		1	

- -- E N D -- -

Model	Year	MG	SG	Illustration	Restrictions	Update				
928	86	2	01	201-05		179	14:19	01.09.2004	PORSCHE	PET	PORSCHE

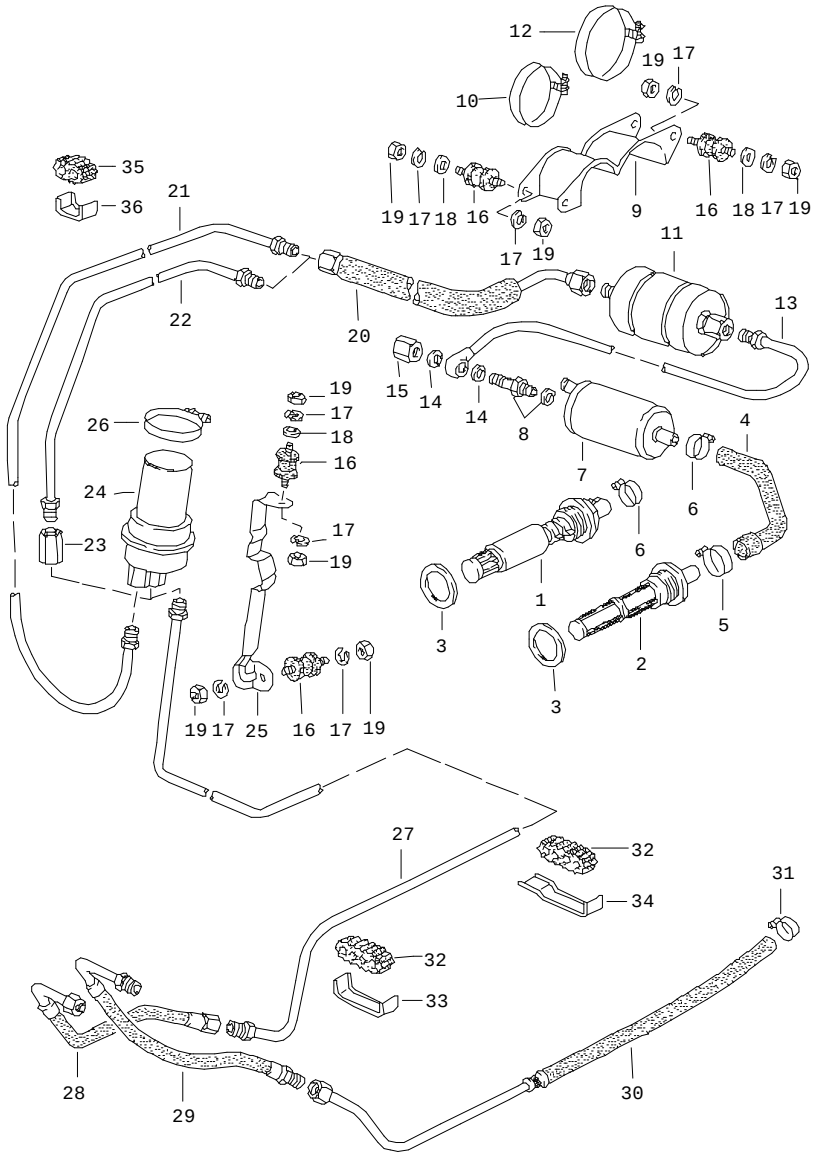

Pos	Part Number	Name	Remarks	Qty	Model
		fuel system			
1	928 608 013 00	in-tank fuel pump		1	(J) (AUS)
2	928 201 081 04	fuel filter M 37 X 1,5		1	
3	928 201 187 02	sealing ring		1	
4	928 356 550 04	fuel hose		1	(J) (AUS)
4	928 356 550 05	fuel hose		1	
5	999 512 346 00	hose clamp A 20/9		1	
6	999 512 554 00	hose clamp A 18/9		1	
6	999 512 554 00	hose clamp A 18/9		2	(J) (AUS)
7	911 608 102 02	fuel pump	83	1	M28.11/12
(7)	928 608 104 01	fuel pump		1	M28.19/20 M28.21/22
8	893 906 093	retaining valve		1	
9	928 356 151 01	support		1	
10	999 512 394 00	hose clamp		1	
11	928 110 147 05	fuel filter	83	1	M28.11/12
11	928 110 253 04	fuel filter		1	M28.19/20 (AG)(SA)
11	928 110 253 06	fuel filter		1	M28.21/22
11	928 110 253 04	fuel filter		1	M28.21/22 (AG)(SA)
12	999 512 276 02	clip		1	
13	928 356 063 10	fuel line		1	
(13)	928 356 063 01	fuel line see workshop manual 20.8		1	
14	900 123 005 20	sealing ring A 12 X 16		2	

Pos	Part Number	Name	Remarks	Qty	Model
15	928 110 475 01	cap nut		1	
16	944 610 115 00	bonded rubber mounting		6	
17	N 012 006 4	lock ring B 6		12	
18	N 011 666 7	washer B 6,4		9	
19	900 076 010 02	hexagon nut M 6		12	
20	928 356 053 01	fuel line		1	
21	928 356 051 00	fuel line	83	1	
22	928 356 057 00	fuel line		1	
23	477 209 169	connecting piece		2	
24	928 110 197 06	fuel accumulator	83	1	
25	928 356 639 00	support	83	1	
26	999 512 199 02	clip S 54/9	83	1	
27	928 356 029 03	fuel line to engine compartment		1	
(27)	928 356 029 05	fuel line to engine compartment	85	1	(J)
(27)	928 356 029 09	fuel line to engine compartment	86	1	M28.21/22
(27)	928 356 029 08	fuel line to engine compartment	86	1	M28.43/44 M28.45/46
28	928 356 079 00	fuel hose		1	
29	E 928 356 081 00	fuel hose	83	1	
30	928 356 031 01	fuel line return to tank	83	1	
(30)	928 356 031 02	fuel line return to tank	-85	1	
(30)	928 356 031 04	fuel line return to tank	86	1	

Pos	Part Number	Name	Remarks	Qty	Model
31	N 023 569 2	hose clamp AR 16/9		1	
32	928 356 551 01	rubber mounting		5	
33	928 356 522 00	supporting bow	-85	4	
(33)	928 356 553 00	supporting bow	86	5	
34	928 356 526 00	supporting bow	-85	1	
35	928 356 525 00	rubber mounting	-85	10	
(35)	928 356 525 01	rubber mounting	86	6	
36	928 356 527 00	supporting bow	-85	10	
(36)	928 356 555 00	clamp	86	6	
-	999 511 085 02	clamp	86	1	M 157 M 298/299
-	999 511 118 02	clip	86	1	
-	999 591 487 02	speed nut	86	1	
-	900 187 115 02	screw	86	1	
		- -- E N D -- -			

Model	Year	MG	SG	Illustration	Restrictions	Update				
928	86	2	01	201-06		179	14:19	01.09.2004	PORSCHE	PET	PORSCHE

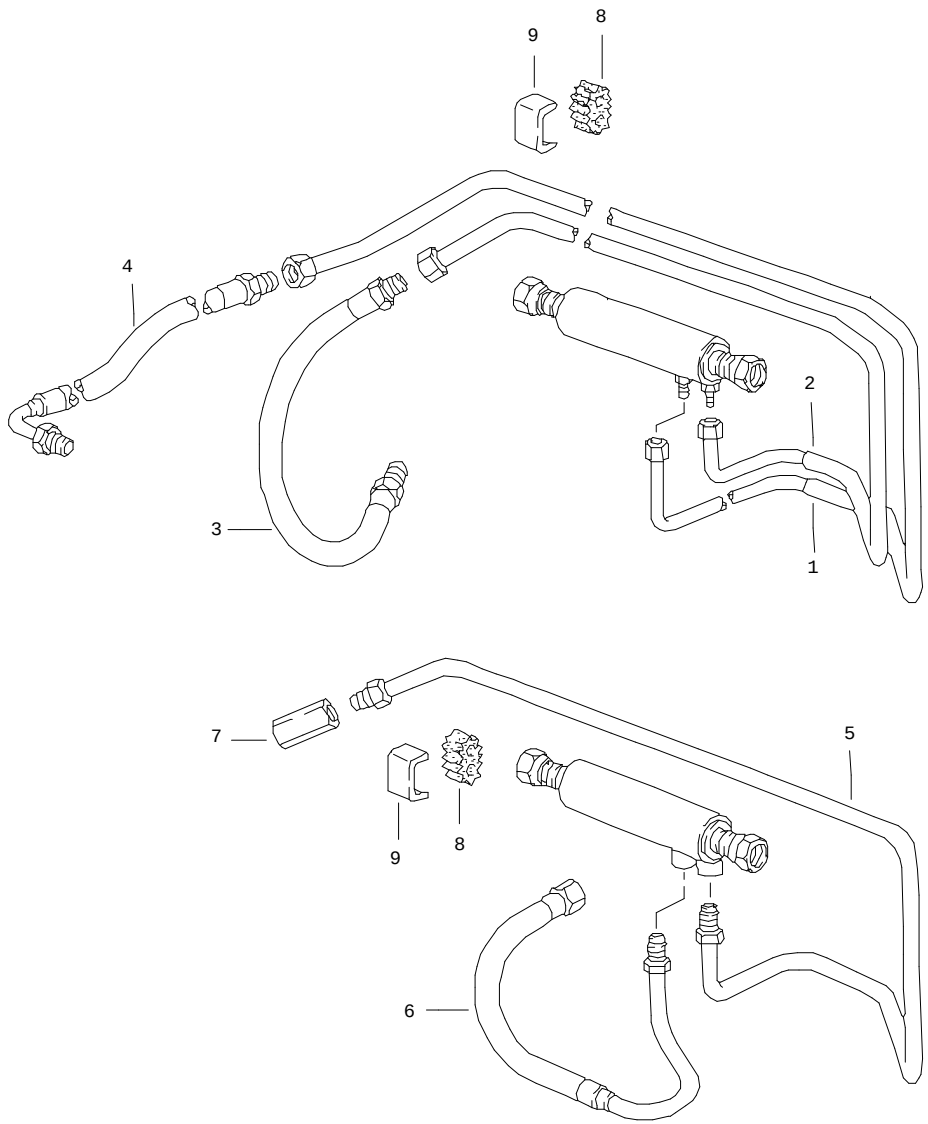

Pos	Part Number	Name	Remarks	Qty	Model
		fuel cooler			
5	928 356 185 01	return line	84-	1	
6	928 356 081 02	feed line	84-	1	
7	477 209 169	connecting piece	84-	1	
8	928 356 525 00	rubber mounting		2	
9	928 356 527 00	supporting bow		2	
		- -- E N D -- -			

Model	Year	MG	SG	Illustration	Restrictions	Update				
928	86	2	01	201-10		179	14:19	01.09.2004	PORSCHE	PET	PORSCHE

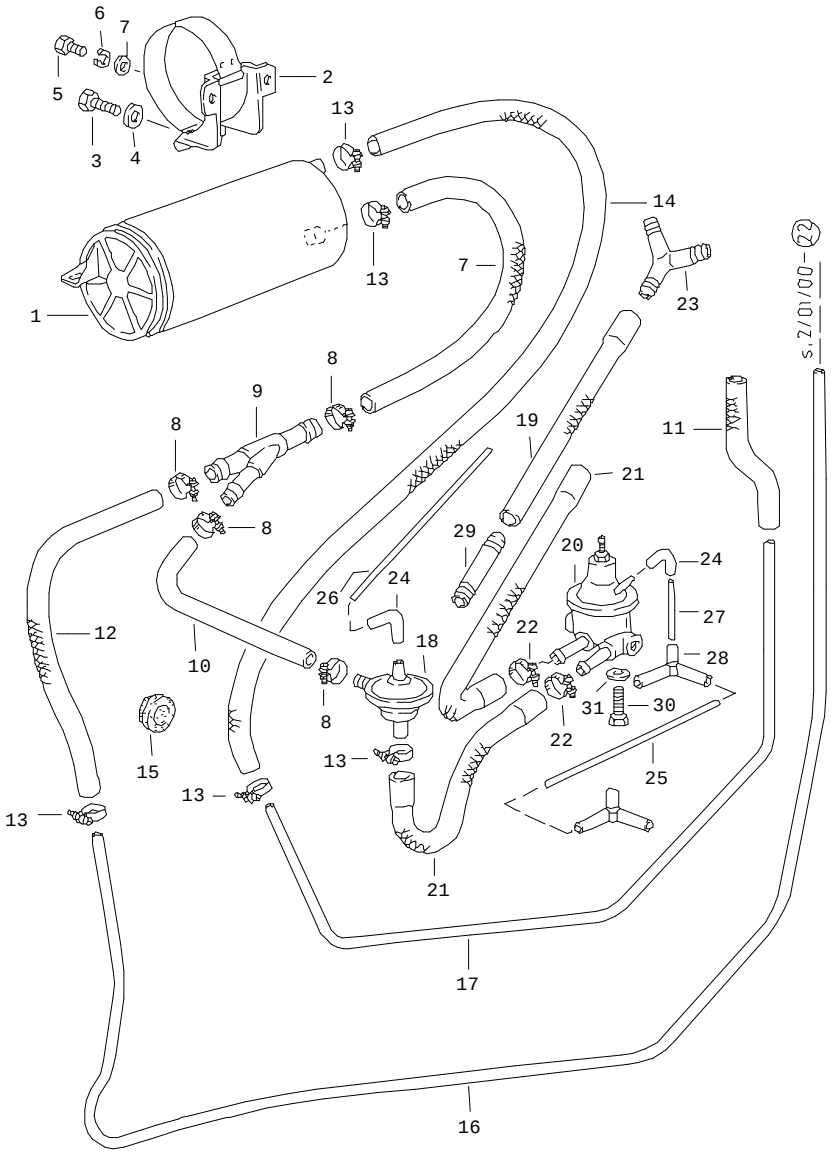

Pos	Part Number	Name	Remarks	Qty	Model
		tank ventilation			
1	993 201 221 01	carbon canister		1	
2	928 201 015 02	bracket		1	
3	900 075 014 02	hexagon-head bolt M 6 X 18		1	
4	803 817 121	washer B 6,4 $ 18 MM		1	
5	900 075 260 02	hexagon-head bolt M 6 X 16 SB		2	
6	N 011 524 7	washer B 6,4		2	
7	928 201 008 04	hose		1	
8	900 272 003 02	hose clamp LA 12-20		3	
9	928 201 219 02	connecting piece		1	
-	999 181 168 50	hose 12 X 18,5		*	
10	-	380 MM	/LL		
(10)	-	800 MM	/RL		
-	999 181 716 50	hose 9,5 X 15,5		*	
11	-	185 MM		1	
12	-	530 MM		1	
13	999 512 554 00	hose clamp S 18/9		3	
14	928 201 367 02	hose		1	
15	021 119 569 A	rubber sleeve		3	
16	928 201 341 04	vent line	-85	1	
(16)	928 201 341 07	vent line	86	1	
17	928 201 353 03	purge-air line front	-85	1	

Pos	Part Number	Name	Remarks	Qty	Model
17	928 201 353 05	purge-air line front	86	1	
(17)	928 201 355 05	purge-air line rear	86	1	
18	928 110 429 08	vacuum valve		1	
19	928 110 652 00	hose		1	M 479
20	944 110 429 00	control valve		1	
21	928 110 652 02	hose		2	
22	N 023 570 2	hose clamp A 9 X 15 ZY	83	2	
23	928 110 273 00	y-piece		1	
24	928 574 717 02	hose		2	
-	N 020 139 1	hose 4 X 1		*	
25	-	200 MM		1	
26	-	450 MM		1	
27	-	480 MM		1	
28	928 573 727 02	distributing piece		1	
29	999 137 023 40	connecting socket		1	
30	N 010 207 6	hexagon-head bolt M 5 X 12		2	
31	900 025 003 02	washer 5,3		2	
		- -- E N D -- -			

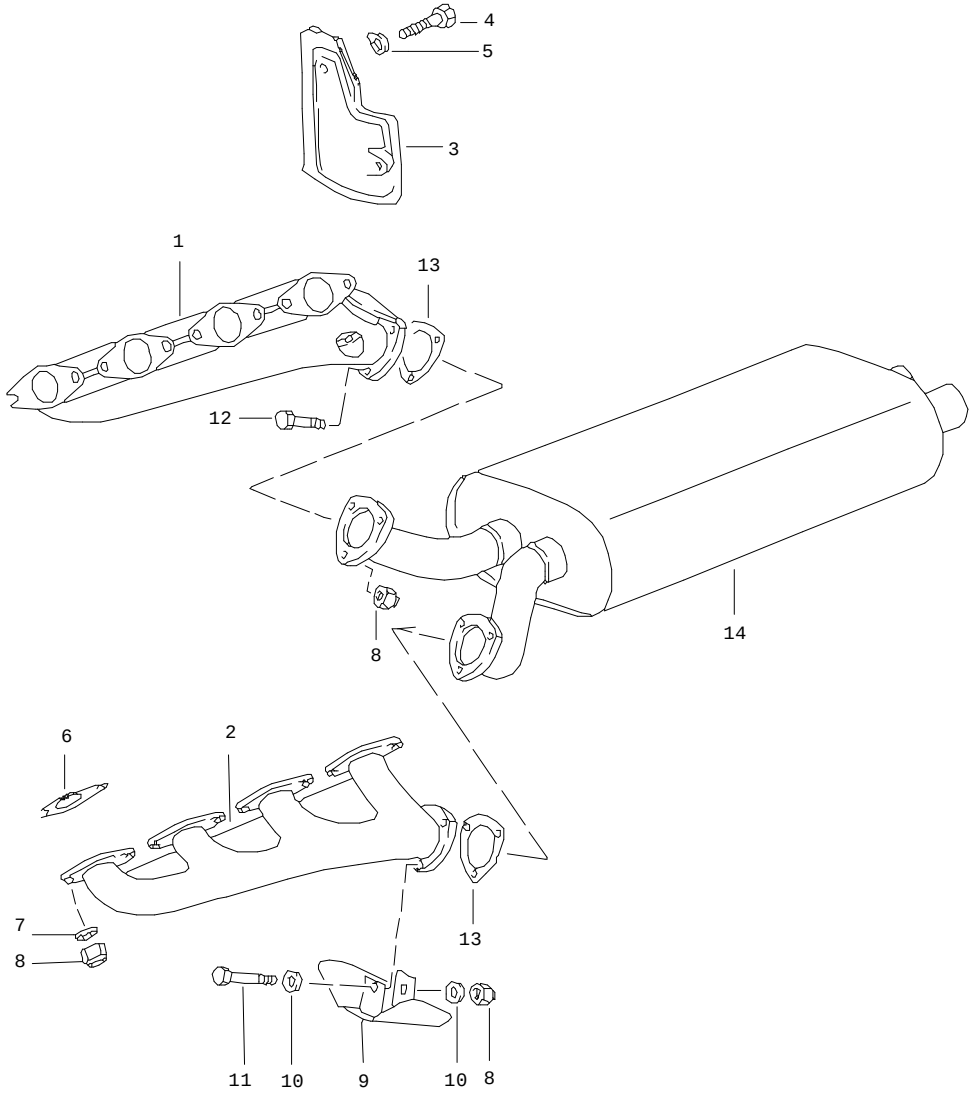

Pos	Part Number	Name	Remarks	Qty	Model
		exhaust system front muffler			
1	928 111 139 09	exhaust manifold cyl. 1 - 4		1	M28.11/12 M28.21/22
2	928 111 140 02	exhaust manifold cyl. 5 - 8	83	1	M28.11/12
(2)	928 111 140 04	exhaust manifold cyl. 5 - 8	84-	1	M28.21/22
3	927 111 149 02	cover plate	/RL	1	
4	N 010 208 5	hexagon-head bolt M 6 X 8	/RL	2	
5	900 910 096 02	lock nut	/RL	2	
6	928 111 193 12	gasket		8	
7	928 111 181 00	washer		16	
8	999 084 052 02	lock nut M 8		22	
9	928 111 067 01	protective plate		1	M28.11/21
10	999 025 078 02	washer 8,4X17X1,5		2	M28.11/21
11	900 074 283 02	hexagon-head bolt M 8 X 45		1	M28.11/21
12	900 074 287 02	hexagon-head bolt M 8 X 35		5	M28.11/21
12	900 074 287 02	hexagon-head bolt M 8 X 35		6	M28.12/22
13	928 111 127 02	gasket		2	
14	928 111 096 03	front muffler		1	
(14)	928 111 090 00	front muffler		1	M28.21/22 (S)(CH)
-	928 111 901 00	set of fastening parts		1	
		- -- E N D -- -			

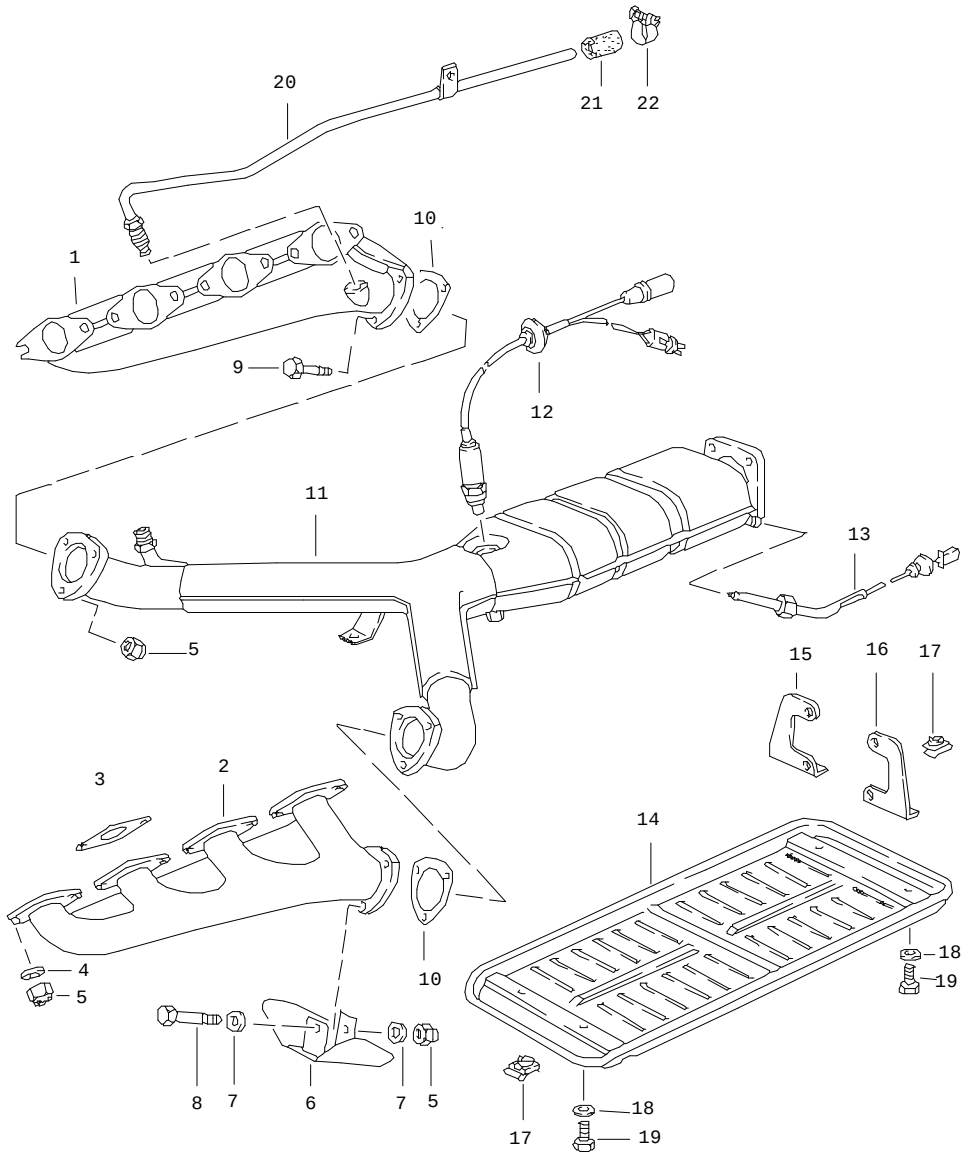

Pos	Part Number	Name	Remarks	Qty	Model
		exhaust system catalytic converter			
1	928 111 139 08	exhaust manifold cyl. 1 - 4		1	
2	928 111 140 02	exhaust manifold cyl. 5 - 8		1	
3	928 111 193 12	gasket		8	
4	928 111 181 00	washer		16	
5	999 084 052 02	lock nut M 8		22	
9	900 074 287 02	hexagon-head bolt M 8 X 35		6	
10	928 111 127 02	gasket		2	
11	928 113 138 07	catalytic converter		1	
12	928 606 124 00	oxygen sensor		1	
13	928 606 129 00	temperature sensor		1	
14	928 113 161 01	catalytic converter cover		1	
15	928 113 148 00	retaining bracket	/R	1	
16	928 113 163 00	retaining bracket	/L	1	
17	999 507 326 02	captive nut		4	
18	N 011 524 7	washer A 6,4		4	
19	900 075 057 02	hexagon-head bolt M 6 X 16		4	
20	928 111 149 00	pipeline		1	
21	035 133 335	cap		1	
22	999 512 160 02	hose clamp S 13/9		1	
-	928 111 901 00	set of fastening parts		1	
		- -- E N D -- -			

Model	Year	MG	SG	Illustration	Restrictions	Update				
928	86	2	02	202-10		179	14:20	01.09.2004	PORSCHE	PET	PORSCHE

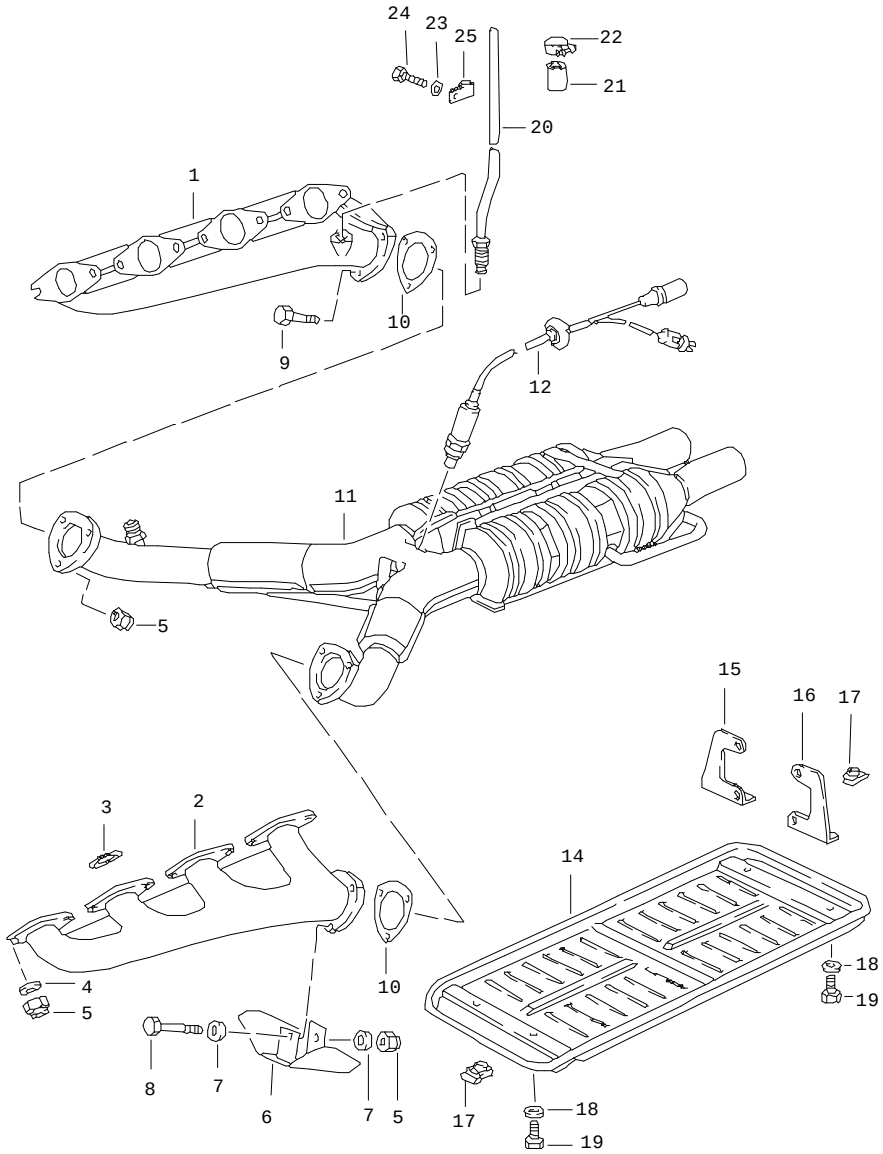

Pos	Part Number	Name	Remarks	Qty	Model
		exhaust system catalytic converter			
1	A 928 111 145 05	exhaust manifold cyl. 1 - 4		1	
(1)	928 111 145 05	exhaust manifold cyl. 1 - 4		1	
(1)	928 111 145 05	exhaust manifold cyl. 1 - 4	/RL	1	M28.45/46
2	A 928 111 146 05	exhaust manifold cyl. 5 - 8		1	
(2)	928 111 146 05	exhaust manifold cyl. 5 - 8		1	
3	944 111 205 00	sealing ring		8	
4	928 111 181 00	washer		16	
5	999 084 052 02	lock nut M 8		22	
6	928 111 067 01	protective plate		1	M28.43/45
7	999 025 078 02	washer 8,4 X 17 X 1,5		2	M28.43/45
8	900 074 283 02	hexagon-head bolt M 8 X 45		1	M28.43/45
9	900 074 287 02	hexagon-head bolt M 8 X 35		5	M28.43/45
9	900 074 287 02	hexagon-head bolt M 8 X 35		6	M28.44/46
10	928 111 127 02	gasket		2	
11	928 113 212 01	catalytic converter		1	M28.43/44
11	928 113 212 01	catalytic converter		1	M28.43/44
(11)	928 113 214 03	catalytic converter	85-	1	M28.44(J)
(11)	928 113 219 00	catalytic converter	86	1	M28.45/46
12	928 606 128 00	oxygen sensor heated		1	
14	A 928 113 161 03	catalytic converter cover		1	M28.44(J)

Pos	Part Number	Name	Remarks	Qty	Model
14	928 113 161 03	catalytic converter cover		1	M28.44(J)
15	928 113 148 00	retaining bracket	/R	1	M28.44(J)
16	928 113 163 00	retaining bracket	/L	1	M28.44(J)
17	999 507 003 02	speed nut		4	M28.44(J)
18	N 011 524 7	washer A 6,4		4	M28.44(J)
19	900 187 015 02	tapping screw B 6,3 X 13		4	M28.44(J)
20	928 111 149 03	pipeline cyl. 1 - 4		1	
(20)	928 111 150 00	pipeline cyl. 5 - 8		1	
21	034 133 335 D	cap		2	
22	999 512 160 02	hose clamp S 13/9		2	
23	N 011 524 7	washer A 6,4		2	
24	N 011 524 7	washer M 6 X 12		2	
25	928 111 158 00	holder		2	
(25)	928 111 158 01	clip		2	
-	928 111 901 00	set of fastening parts		1	
		- -- E N D -- -			

Pos	Part Number	Name	Remarks	Qty	Model

Model	Year	MG	SG	Illustration	Restrictions	Update				
928	86	2	02	202-15		179	14:20	01.09.2004	PORSCHE	PET	PORSCHE

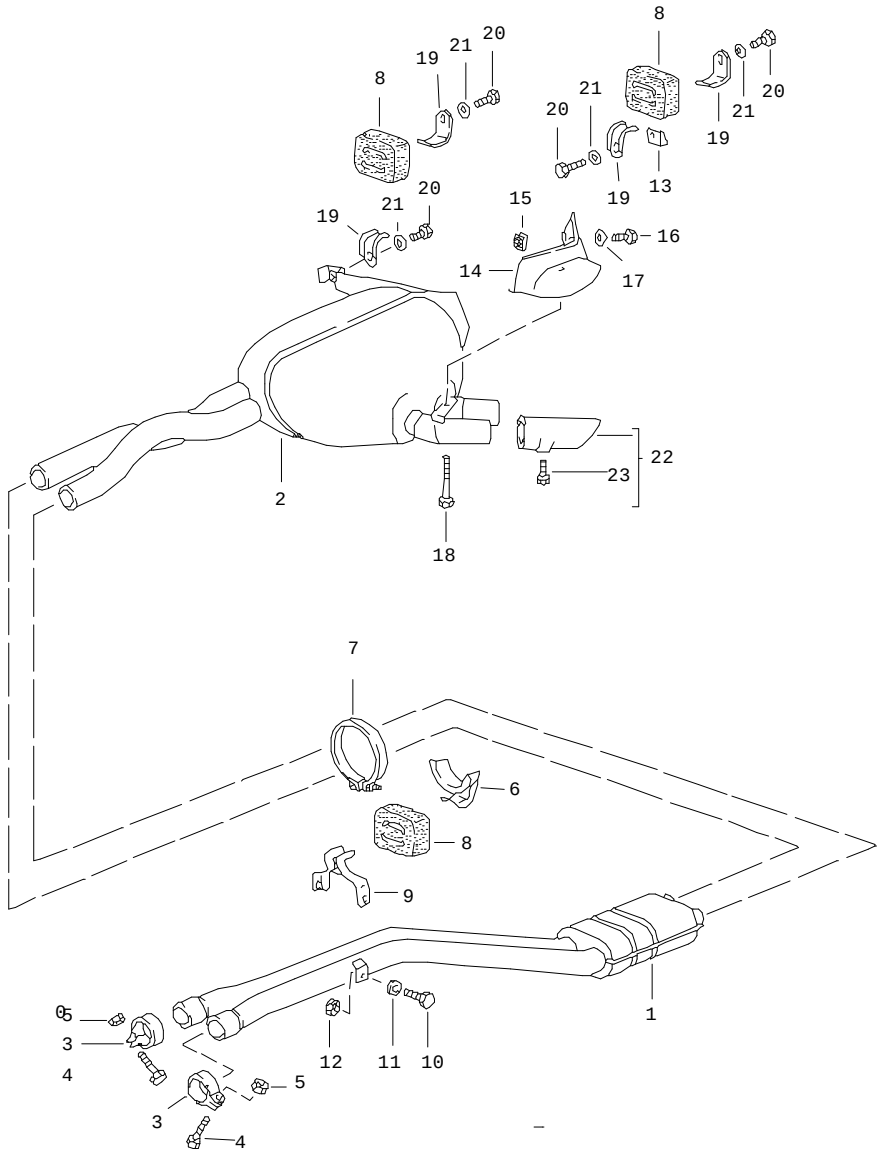

Pos	Part Number	Name	Remarks	Qty	Model
		exhaust system main exhaust muffler			
1	928 111 935 00	intermediate silencer		1	
2	928 111 933 00	main exhaust muffler		1	
(2)	928 111 933 01	main exhaust muffler		1	(CH)(S)
3	928 111 424 00	clip		2	
4	900 155 036 02	hexagon-head bolt M 10 X 50		2	
5	999 084 047 02	lock nut M 10		2	
6	928 111 278 00	hook upper		1	
7	999 512 325 02	clip		1	
8	928 111 259 02	rubber mounting		3	
9	928 111 279 00	hook lower		1	
10	900 075 318 02	hexagon-head bolt M 8 X 16		2	
11	999 025 078 02	washer 8,4 X 7 X 1,5		2	
12	999 084 052 02	lock nut M 8		2	
13	928 111 257 01	support		1	
14	928 111 242 01	cover plate		1	
15	999 507 326 02	captive nut M 6		1	
16	900 075 057 02	hexagon-head bolt M 6 X 16		1	
17	N 011 524 7	washer A 6,4		1	
18	N 010 375 4	hexagon-head bolt M 8 X 75		1	
19	928 111 264 01	hook		4	

Pos	Part Number	Name	Remarks	Qty	Model	Pos	Part Number	Name	Remarks	Qty	Model
20	900 075 087 02	hexagon-head bolt M 8 X 16		4							
21	900 025 007 02	washer A 8,4		4							
22	928 111 271 01	ornamental exhaust pipe		2							
23	N 010 225 4	hexagon-head bolt M 5 X 8		8							
		- -- E N D -- -									

Model	Year	MG	SG	Illustration	Restrictions	Update				
928	86	2	02	202-20		179	14:21	01.09.2004	PORSCHE	PET	PORSCHE

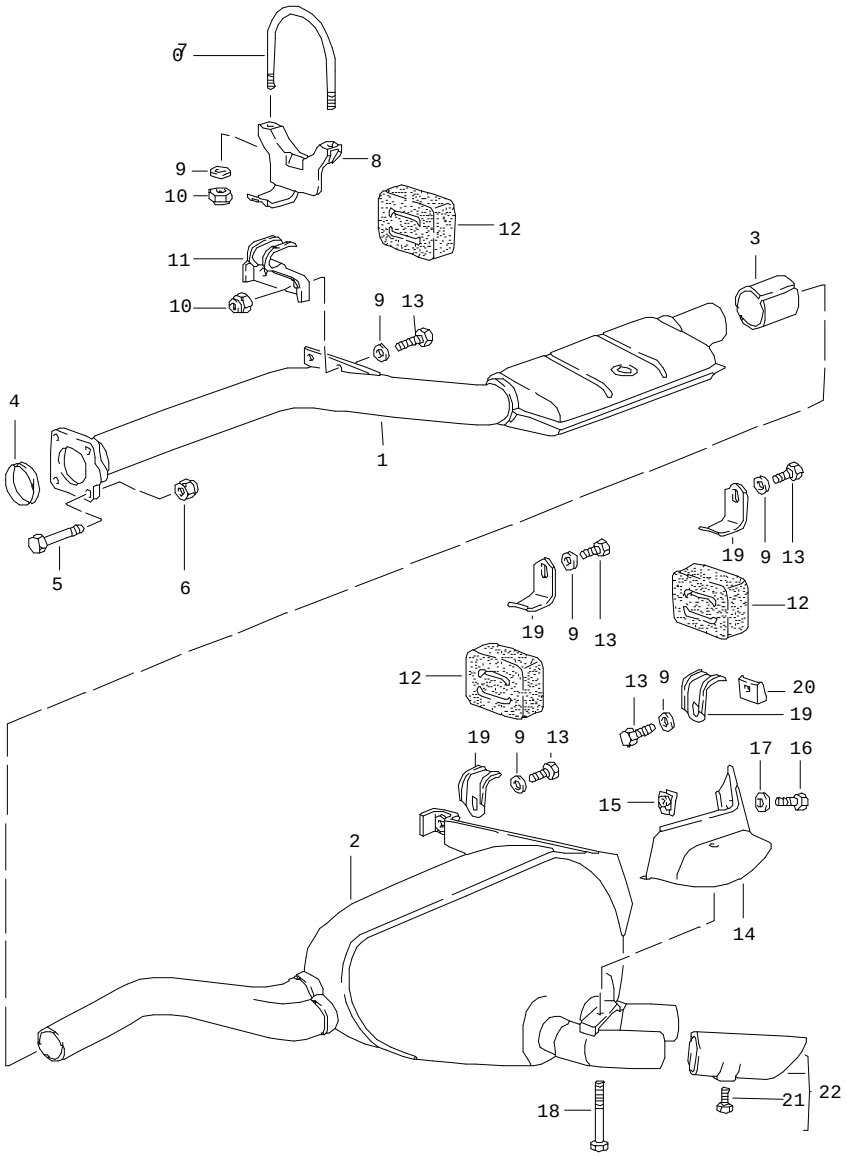

Pos	Part Number	Name	Remarks	Qty	Model
		exhaust system main exhaust muffler	-84		
1	928 111 934 00	intermediate silencer		1	
2	928 111 931 03	main exhaust muffler		1	
3	928 111 955 00	sleeve		1	
4	928 111 244 03	sealing ring		1	
5	N 010 020 2	hexagon-head bolt M 10 X 38		4	
6	999 084 047 02	lock nut M 10		4	
7	928 111 227 01	clip		1	
8	928 111 061 00	support		1	
9	900 025 007 02	washer A 8,4		8	
10	999 084 041 02	lock nut M 9		4	
11	928 111 261 02	hook		1	
12	928 111 259 02	rubber mounting		3	
13	900 075 087 02	hexagon-head bolt M 8 X 16		6	
14	928 111 242 01	cover plate		1	
15	999 507 326 02	captive nut		1	
16	900 075 057 02	hexagon-head bolt M 6 X 16		1	
17	N 011 524 7	washer A 6,4		1	
18	N 010 375 4	hexagon-head bolt M 8 X 75		1	
19	928 111 264 01	hook		4	
20	928 111 257 01	support		1	
21	N 010 225 4	hexagon-head bolt M 5 X 8		X	

Pos	Part Number	Name	Remarks	Qty	Model	Pos	Part Number	Name	Remarks	Qty	Model
22	928 111 271 01	ornamental exhaust pipe		2							
		- -- E N D -- -									

Model	Year	MG	SG	Illustration	Restrictions	Update				
928	86	2	02	202-25		179	14:21	01.09.2004	PORSCHE	PET	PORSCHE

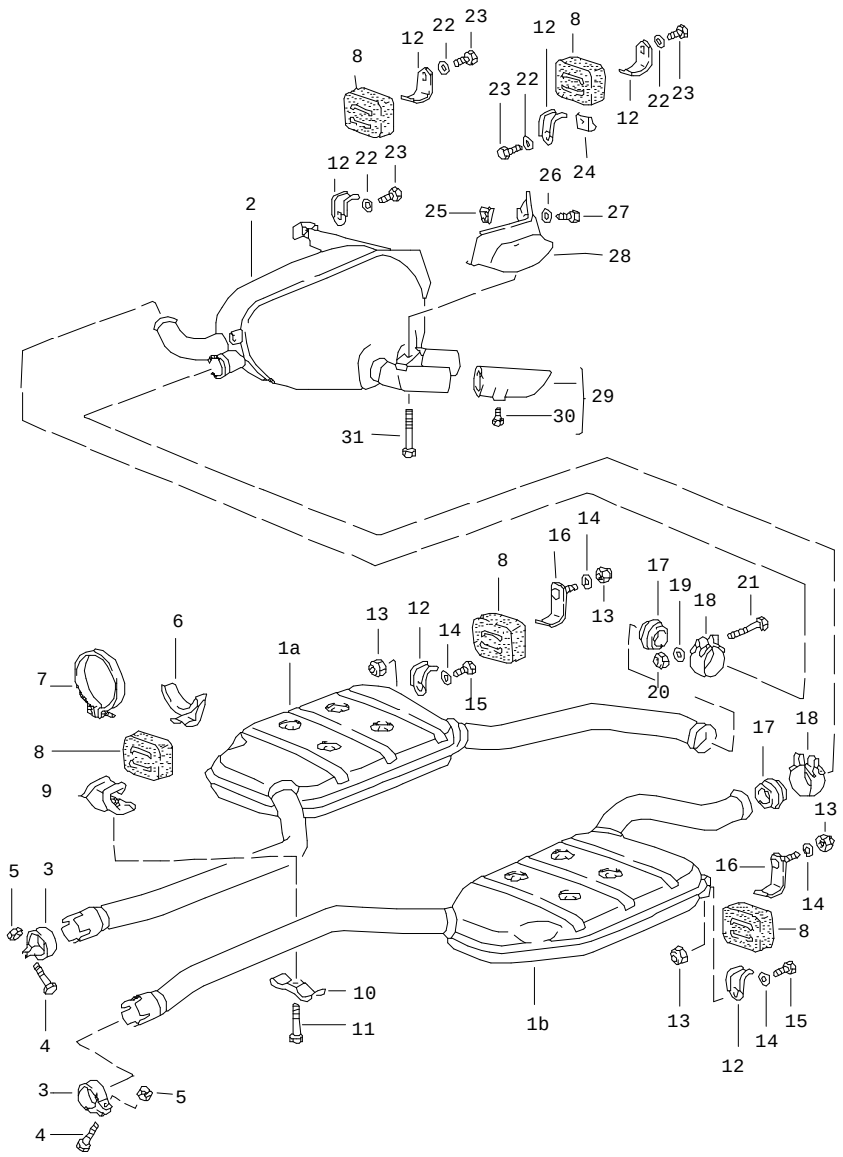

Pos	Part Number	Name	Remarks	Qty	Model
		exhaust system main exhaust muffler			86
1A	928 111 094 01	intermediate silencer	/R	1	
1B	928 111 093 02	intermediate silencer	/L	1	
2	928 111 044 00	main exhaust muffler		1	
2	928 111 046 00	main exhaust muffler		1	(J)(SG)
3	928 111 424 00	clip		2	
4	900 155 036 02	hexagon-head bolt M 10 X 50		2	
5	999 084 047 02	lock nut M 10		2	
6	928 111 278 00	hook		1	
7	999 512 325 02	clip		1	
8	928 111 259 02	rubber mounting		4	
9	928 111 287 00	support		1	
10	928 111 288 00	support		1	
11	900 155 036 02	hexagon-head bolt M 10 X 50		1	
12	928 111 264 01	hook		6	
13	900 910 022 02	lock nut		4	
14	900 025 007 02	washer		4	
15	900 075 366 02	hexagon-head bolt		2	
16	928 111 260 00	hook		2	
17	928 111 246 05	sealing ring		2	
18	928 111 427 00	clip		2	
19	999 025 078 02	washer		2	
20	999 084 052 02	lock nut		2	
21	900 074 304 02	hexagon-head bolt M 8 X 60		2	

Pos	Part Number	Name	Remarks	Qty	Model	Pos	Part Number	Name	Remarks	Qty	Model
22	900 025 007 02	washer A 8,4		4							
23	900 075 087 02	hexagon-head bolt M 8 X 16		4							
24	928 111 257 01	support		1							
25	999 507 326 02	captive nut M 6		1							
26	N 011 524 7	washer A 6,4		1							
27	900 075 057 02	hexagon-head bolt M 6 X 16		1							
28	928 111 242 01	cover plate		1							
29	928 111 271 01	ornamental exhaust pipe		2							
30	N 010 225 4	hexagon-head bolt M 5 X 8		2							
31	N 010 375 4	hexagon-head bolt M 8 X 75		1							
		- -- E N D -- -									

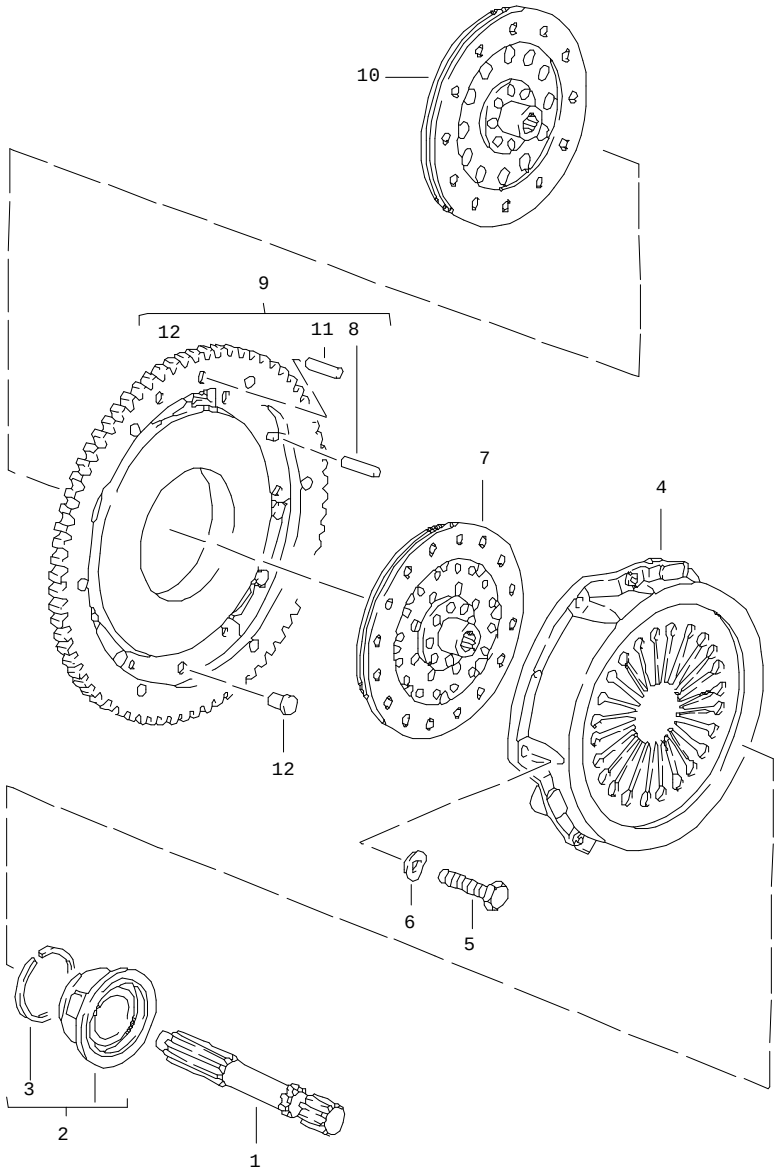

Pos	Part Number	Name	Remarks	Qty	Model
		clutch			
1	928 421 235 16	central shaft		1	
2	928 116 085 24	clutch release bearing		1	
3	999 152 068 01	snap ring		1	
4	> 928 116 031 26	pressure plate		1	
5	N 010 340 6	hexagon-head bolt M 8 X 40		6	
6	900 025 007 02	washer A 8,4		6	
7	> 928 116 011 36	clutch plate 2		1	
8	999 012 030 00	straight pin	83	3	
8	999 012 030 00	straight pin	84-	2	
9	928 116 033 22	intermediate ring	83	1	
9	928 116 033 26	intermediate ring	84-	1	
10	> 928 116 011 35	clutch plate 1		1	
11	900 302 010 00	straight pin	84-	2	
12	928 116 471 00	straight pin	84-	1	
--	000 043 024 00	extreme-pressure grease see group 0/06/00		X	
--	928 116 911 00	repair kit for clutch		1	
		- -- E N D -- -			

Model	Year	MG	SG	Illustration	Restrictions	Update				
928	86	3	01	301-05		179	14:21	01.09.2004	PORSCHE	PET	PORSCHE

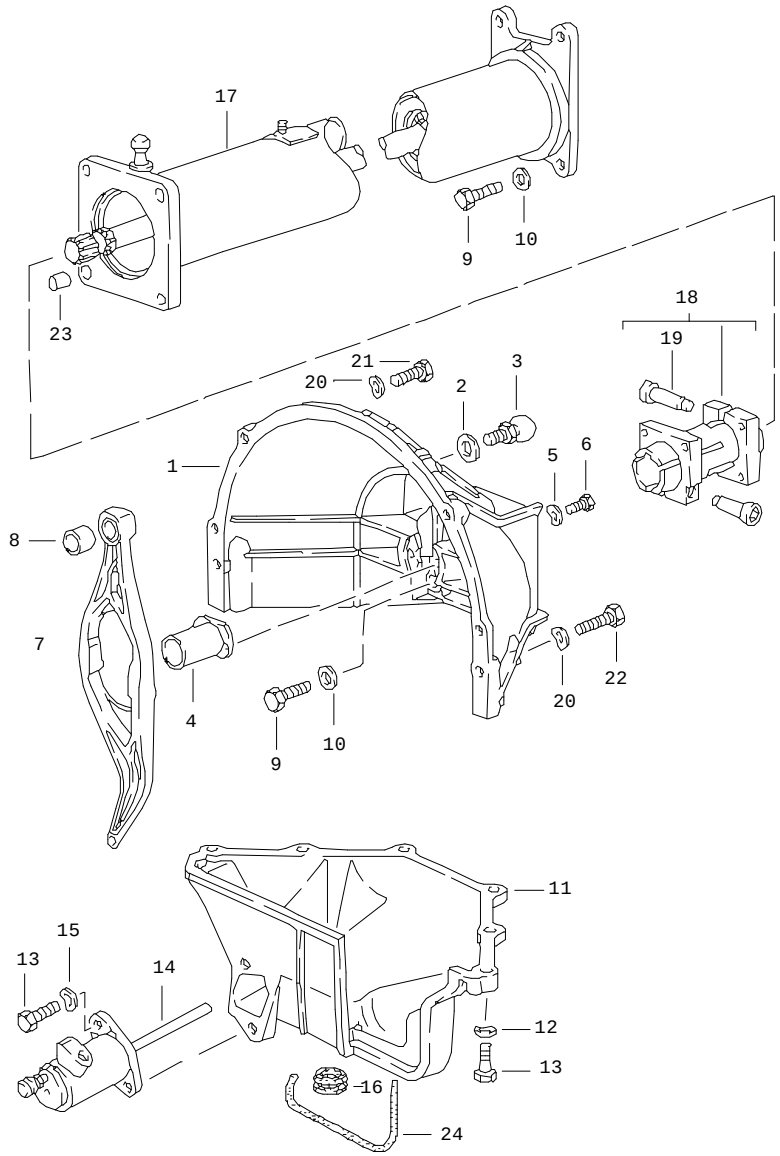

Pos	Part Number	Name	Remarks	Qty	Model
		central tube manual transmission			
1	928 116 402 00	clutch housing		1	
2	900 025 007 02	washer A 8,4		1	
3	928 116 075 01	ball pin 8 MM $		1	
4	928 116 087 13	guide tube		1	
5	N 011 524 7	washer A 6,4		2	
6	900 075 057 02	hexagon-head bolt M 6 X 16		2	
7	928 116 832 09	clutch release lever		1	
8	928 116 145 03	ball socket		1	
9	N 010 445 2	hexagon-head bolt M 10 X 45		8	
10	900 025 008 09	washer A 10,5		8	
11	928 116 412 01	cover for clutch housing		1	
12	N 012 241 8	spring washer B 8		6	
13	900 075 099 02	hexagon-head bolt M 8 X 30		8	
14	928 116 237 19	clutch operating cylinder		1	
-	* 928 116 901 00	repair kit clutch operating cylinder		1	
15	900 027 015 02	lock ring B 8		2	
16	928 116 425 00	cap		3	
(16)	477 521 177	cap		1	
17	928 421 012 26	central tube ready for installation		1	

Pos	Part Number	Name	Remarks	Qty	Model
18	922 421 051 02	clamping sleeve		1	
19	931 421 240 00	clamping screw		2	
20	N 011 531 14	washer B 12		4	
21	N 010 142 2	hexagon-head bolt M 12 X 1,5 X 50		4	
22	N 010 165 3	hexagon-head bolt M 12 X 1,5 X 65		2	
23	900 197 042 01	roll pin 10 X 12		2	
24	928 116 427 02	sealing strip		1	
		- -- E N D -- -			

Pos	Part Number	Name	Remarks	Qty	Model

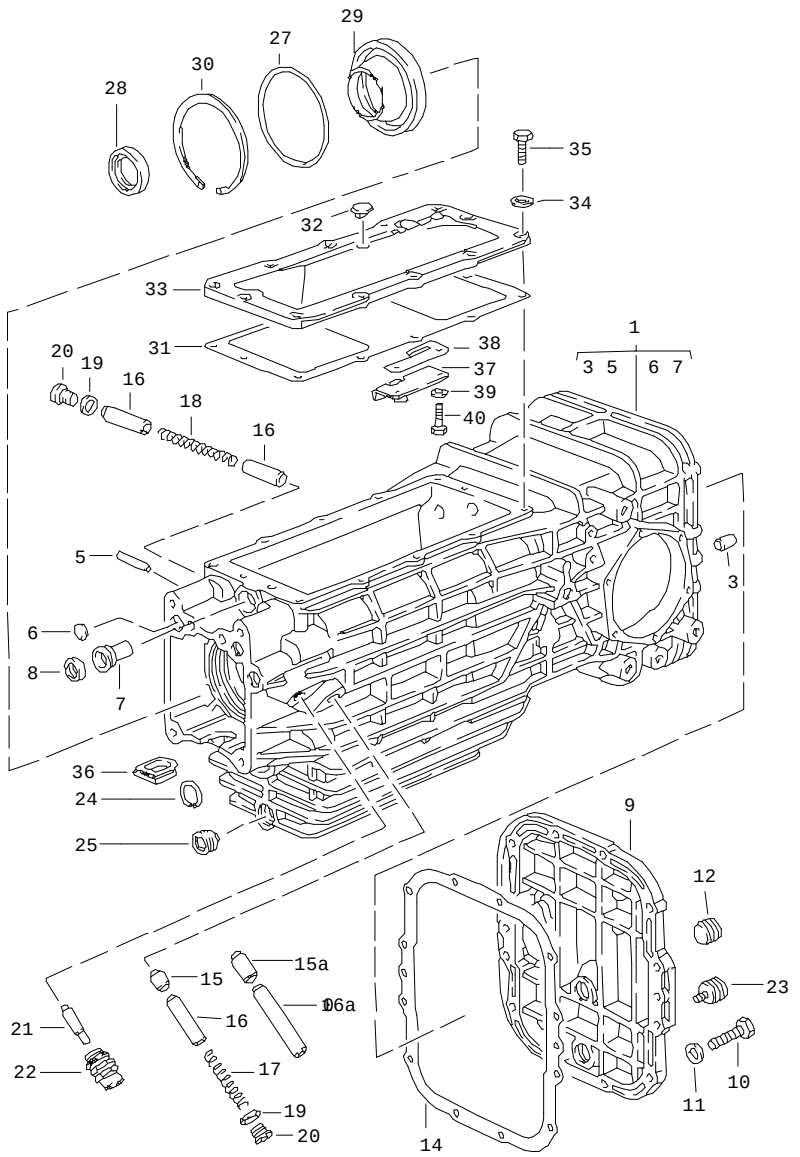

Pos	Part Number	Name	Remarks	Qty	Model
		replacement transmission transmission case manual transmission			
-	> 928 300 005 07	replacement transmission ready for installation	-84	1	G28.07
-	> 928 300 005 10	replacement transmission ready for installation	85-	1	G28.10
-	E 928 300 005 08	replacement transmission ready for installation	-84	1	G28.08
-	E 928 300 005 11	replacement transmission ready for installation	85-	1	G28.11
-	> 928 300 905 07	replacement transmission ready for installation limit.-slip different. 40%	-84	1	G28.07
-	> 928 300 015 10	replacement transmission ready for installation limit.-slip different. 40%	85-	1	G28.10
-	928 300 905 08	replacement transmission ready for installation limit.-slip different. 40%	-84	1	G28.08
-	> 928 300 015 11	replacement transmission ready for installation limit.-slip different. 40%	85-	1	G28.11
1	E 928 301 901 02	transmission case	-84	1	G28.07/08
(1)	928 301 901 03	transmission case	85-	1	G28.10/11
3	900 012 086 00	straight pin 6 X 18		2	
5	900 302 009 00	straight pin 6M 6 X 32	-84	1	G28.07/08
6	900 040 013 02	cover plate		3	
7	928 301 502 00	guide bush	-84	1	G28.07/08
(7)	928 301 502 03	guide bush	85-	1	G28.10/11
8	928 303 120 01	shaft seal		1	
9	928 301 305 09	housing cover rear		1	

Pos	Part Number	Name	Remarks	Qty	Model
10	900 075 099 02	hexagon-head bolt M 8 X 30		12	
11	900 025 007 02	washer A 8,4		12	
12	999 064 019 02	screw plug		1	
14	928 301 395 03	gasket for housing cover rear		1	
15	928 303 231 21	detent	-84	1	G28.07/08
(15)	928 303 231 24	detent	85-	1	G28.10/11
15A	928 303 232 00	detent	85-	1	G28.10/11
16	928 303 233 22	arresting bush	-84	3	G28.07/08
(16)	928 303 233 25	arresting bush	85-	1	G28.10/11
16A	928 303 234 00	arresting bush	85-	2	G28.10/11
17	928 303 235 20	compression spring	-84	1	G28.07/08
(17)	928 303 235 23	compression spring	85-	1	G28.10/11
18	928 303 237 20	compression spring		1	
(18)	928 303 235 24	compression spring	85-	2	G28.10/11
19	900 123 116 30	sealing ring		2	
20	900 219 006 02	screw plug		2	
21	928 606 241 02	cam follower		1	
22	914 613 541 02	back-up light switch		1	
23	999 064 020 02	screw plug		1	
24	N 012 375 1	circlip		1	
25	999 064 020 02	screw plug		1	
27	928 301 111 00	o-ring		1	
28	928 302 167 03	shaft seal		1	
29	928 302 175 11	housing		1	
30	900 042 052 01	circlip		1	
31	928 301 393 06	gasket for housing cover upper	-84	1	G28.07/08
(31)	928 301 393 06	gasket	85-	1	G28.10/11
32	928 301 311 01	bleeder		1	
33	928 301 303 09	housing cover	-84	1	G28.07/08
(33)	928 301 303 11	cover	85-	1	G28.10/11
34	N 011 524 7	washer A 6,4		12	
35	900 075 016 02	hexagon-head bolt M 6 X 22		12	
36	928 301 171 00	cap		1	
37	928 303 025 05	reversing gear lock		1	
38	928 303 287 01	leaf spring		1	
39	N 012 226 5	spring washer B 6		2	
40	900 075 057 02	hexagon-head bolt M 6 X 16		2	
		- -- E N D -- -			

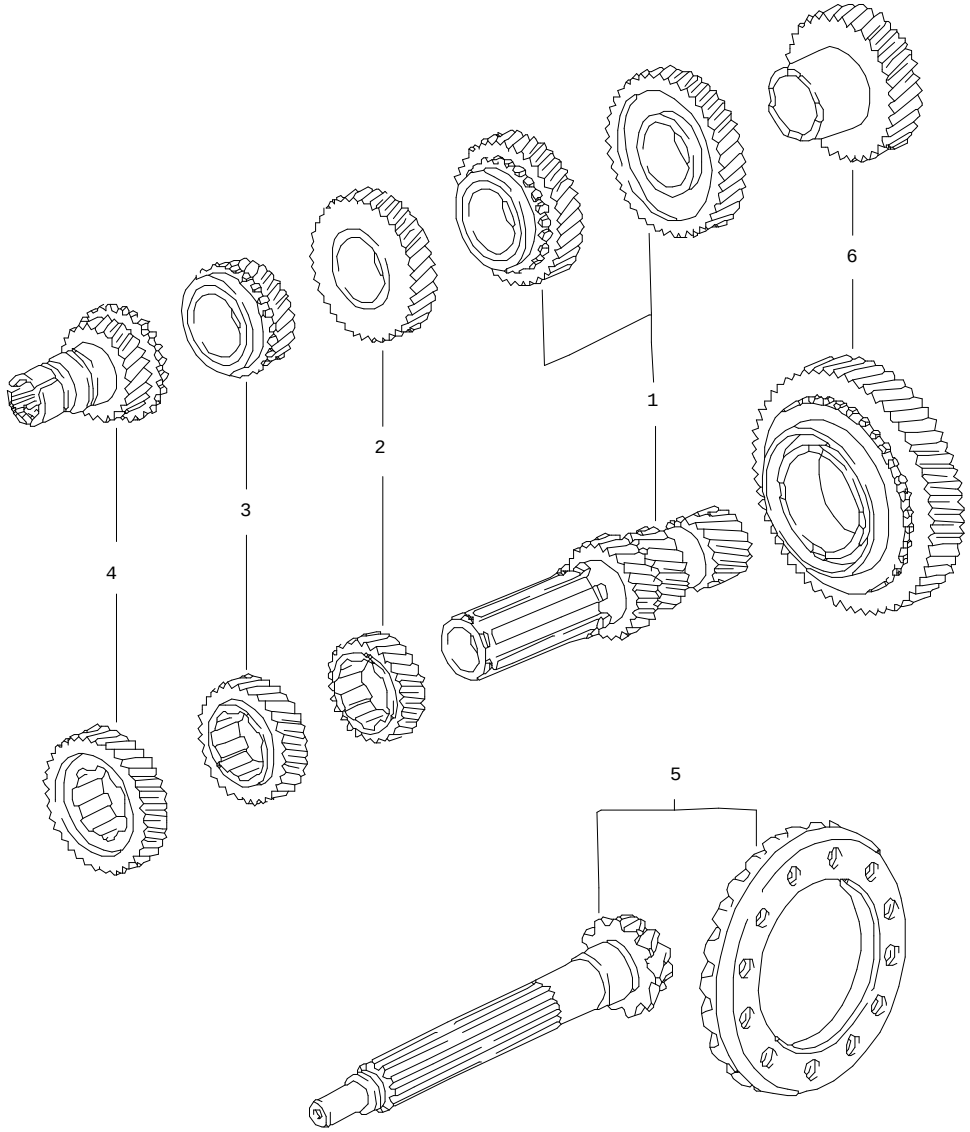

Pos	Part Number	Name	Remarks	Qty	Model
		gear sets manual transmission			
		transmission G 28.07/08	-84		
1	928 302 901 14	gear set 1st/2nd gear Z = 17:44 Z = 22:38 use also: 999.152.087.01 928.302.278.00	-84	1	
2	928 302 903 14	gear wheel pair 3rd speed Z = 26:32	-84	1	
3	928 302 904 14	gear wheel pair 4th speed Z = 29:27	-84	1	
4	928 302 905 19	gear set permanent 5th speed Z = 22:32	-84	1	G28.07
4	928 302 905 15	gear set permanent 5th speed Z = 20:33	-84	1	G28.08
5	928 302 911 27	ring gear and pinion shaft Z = 11:30	-84	1	G28.07
5	928 302 911 32	ring gear and pinion shaft Z = 15:34	-84	1	G28.08
		transmission G 28.10/11	85-		
(1)	928 302 901 21	gear set 1st/2nd gear Z = 17:44 Z = 22:38 use also: 999.152.087.01 928.302.278.00	85-	1	G28.10/11
(2)	928 302 903 21	gear wheel pair 3rd speed Z = 26:32	85-	1	G28.10/11

Pos	Part Number	Name	Remarks	Qty	Model	Pos	Part Number	Name	Remarks	Qty	Model
(3)	928 302 904 21	gear wheel pair 4th speed Z = 29:27	85-	1	G28.10/11						
(4)	928 302 905 23	gear set 5th speed Z = 22:32	85-	1	G28.10						
(4)	928 302 905 24	gear set permanent 5th speed Z = 21:33	85-	1	G28.11						
(5)	928 302 911 55	ring gear and pinion shaft Z = 11:30	85-	1	G28.10						
(5)	928 302 911 56	ring gear and pinion shaft Z = 15:33	85-	1	G28.11						
6	928 302 907 21	gear set reverse gear wheel	85-	1	G28.10/11						
		- -- E N D -- -									

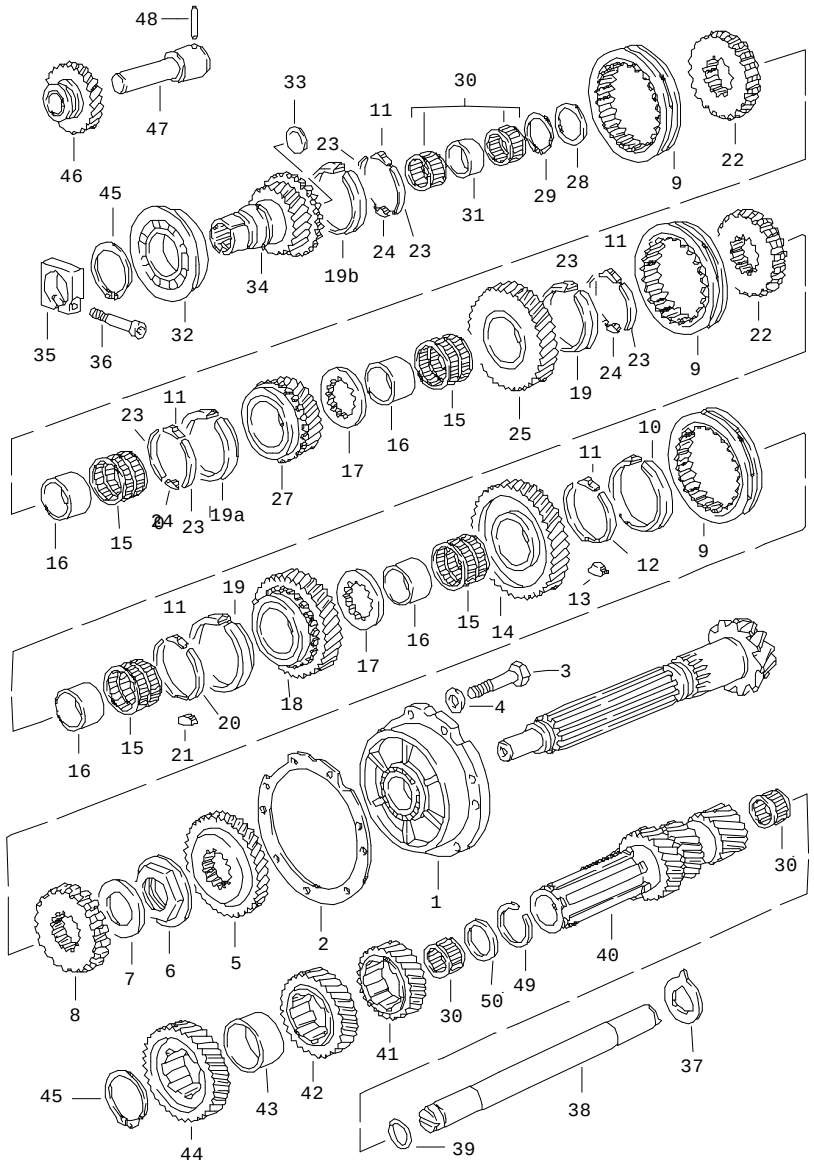

Pos	Part Number	Name	Remarks	Qty	Model
		gears and shafts manual transmission	-84		G28.07/08
1	928 302 063 29	housing with bearing		1	
2	928 302 298 10	adjusting shim 0,10 MM		X	
(2)	928 302 298 11	adjusting shim 0,15 MM		X	
(2)	928 302 298 12	adjusting shim 0,20 MM		X	
(2)	928 302 298 13	adjusting shim 0,50 MM		X	
3	N 010 244 6	hexagon-head bolt 8 X 30		7	
4	999 523 102 02	lock washer lock 8 MM		7	
5	928 302 305 09	reversing fixed gear			
6	928 302 266 06	lock nut 42 X 1,5		1	
7	928 302 289 00	shim 0,60 MM		X	
(7)	928 302 289 01	shim 0,65 MM		X	
(7)	928 302 289 02	shim 0,70 MM		X	
(7)	928 302 289 03	shim 0,75 MM		X	
(7)	928 302 289 04	shim 0,95 MM		X	
(7)	928 302 289 05	shim 1,10 MM		X	
8	928 302 401 21	guide sleeve		1	
9	928 302 411 01	shift sleeve 1st gear reverse gear		1	

Pos	Part Number	Name	Remarks	Qty	Model
(9)	928 302 413 11	shift sleeve		2	
10	928 302 301 31	synchroniser ring 1st gear		1	
11	915 302 315 01	stone		5	
12	928 302 319 05	double barricade tape		1	
13	928 302 321 00	stop 1st gear		1	
14	-	loose gear wheel 1st gear		1	
15	999 201 260 00	needle cage		4	
16	928 302 271 01	inner ring		4	
17	928 302 267 01	thrust washer		2	
18	-	loose gear wheel 2nd gear		1	
19	928 302 302 31	synchroniser ring 2nd/3rd gear		2	
19A	928 302 302 33	synchroniser ring 4th speed		1	
19B	928 302 304 31	synchroniser ring 5th speed		1	
20	E 928 302 318 01	double barricade tape 2nd gear		1	
21	928 302 320 01	stop 2nd gear		1	
22	928 302 402 01	guide sleeve		2	
23	915 302 316 01	brake band		6	
24	928 302 327 00	stop		3	
25	-	loose gear wheel 3rd speed		1	
27	-	loose gear wheel 4th speed		1	
28	928 302 290 14	shim 0,85 MM		X	
(28)	928 302 290 15	shim 0,90 MM		X	
(28)	928 302 290 16	shim 0,95 MM		X	
(28)	928 302 290 17	shim 1,00 MM		X	
(28)	928 302 290 18	shim 1,20 MM		X	
(28)	928 302 290 19	shim 1,40 MM		X	
(28)	928 302 290 20	shim 1,60 MM		X	
29	999 041 036 01	circlip 38 X 1,75		1	
30	928 302 163 00	needle cage		4	
31	928 302 165 01	thrust ring		1	
32	928 302 152 06	deep-groove ball bearing		1	
33	900 040 008 01	cover plate		1	
34	-	drive shaft		1	
35	922 421 239 02	clamping piece		1	
36	931 421 240 00	clamping screw		1	
37	928 302 281 03	thrust washer		1	
38	928 302 036 00	countershaft axle		1	
39	928 302 283 00	round seal		1	
40	-	drive shaft		1	
41	-	fixed gear wheel 3rd speed		1	
42	-	fixed gear wheel 4th speed		1	
43	928 302 279 02	spacer sleeve		1	
44	-	fixed gear wheel 5th speed		1	

Pos	Part Number	Name	Remarks	Qty	Model	Pos	Part Number	Name	Remarks	Qty	Model
45	900 041 019 01	circlip 50 X 2		2							
46	E 928 302 026 07	reversing gear		1							
47	928 302 229 01	reversing gear axle		1							
48	900 309 009 00	roll pin		1							
49	999 152 087 01	snap ring		1							
50	928 302 278 00	support washer		1							
		- -- E N D -- -									

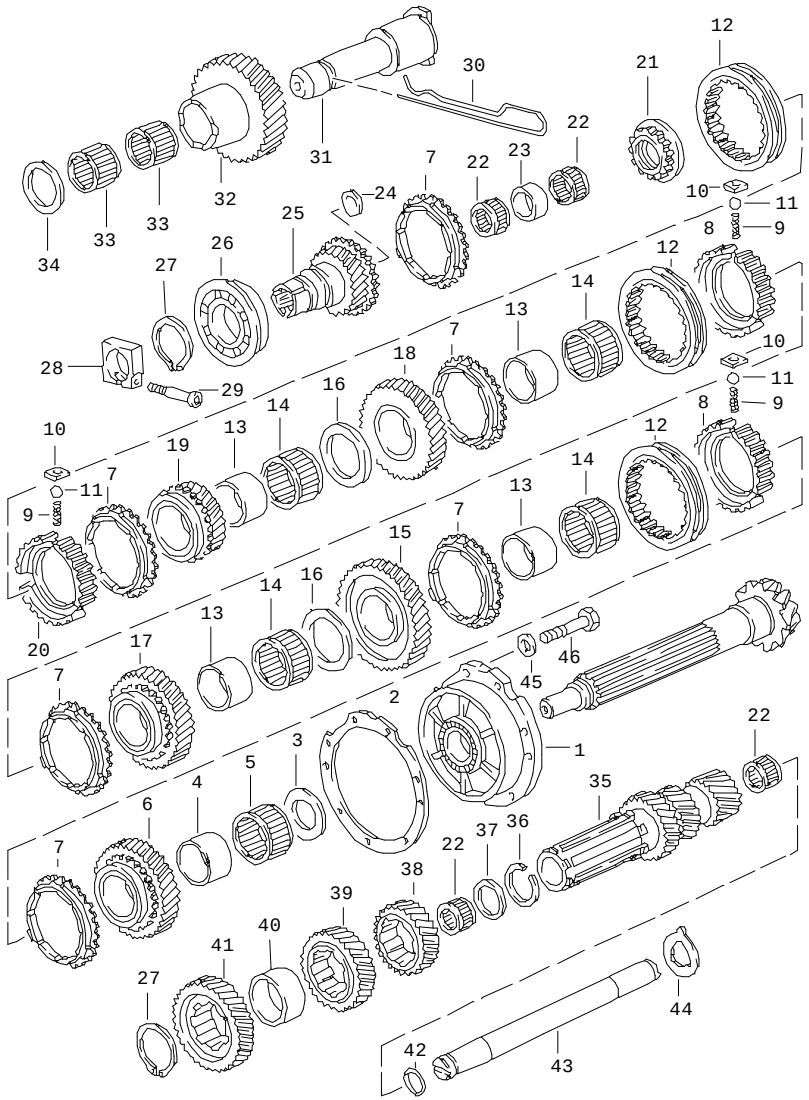

Pos	Part Number	Name	Remarks	Qty	Model
		gears and shafts manual transmission	85-		G28.10/11
(1)	928 302 063 34	bearing sleeve		1	
2	928 302 298 10	adjusting shim 0,10 MM		X	
(2)	928 302 298 11	adjusting shim 0,15 MM		X	
(2)	928 302 298 12	adjusting shim 0,20 MM		X	
(2)	928 302 298 13	adjusting shim 0,50 MM		X	
3	928 302 267 10	shim 2,20 MM		1	
(3)	928 302 267 11	shim 2,30 MM		X	
(3)	928 302 267 12	shim 2,40 MM		X	
(3)	928 302 267 13	shim 2,50 MM		X	
(3)	928 302 267 14	shim 2,60 MM		X	
(3)	928 302 267 15	shim 2,70 MM		X	
(3)	928 302 267 16	shim 2,80 MM		X	
(3)	928 302 267 17	shim 2,90 MM		X	
(3)	928 302 267 18	shim 3,00 MM		X	
4	928 302 272 00	inner ring		1	
5	999 201 080 40	needle cage		1	
6	-	loose gear wheel reverse gear		1	
7	928 304 211 05	synchroniser ring		6	

Model	Year	MG	SG	Illustration	Restrictions	Update				
928	86	3	03	303-06		179	14:22	01.09.2004	PORSCHE	PET	PORSCHE

Pos	Part Number	Name	Remarks	Qty	Model
8	928 304 221 02	guide sleeve 1st gear reverse gear 2nd/3rd gear		2	
9	928 304 261 01	compression spring		9	
10	928 304 251 00	stone		9	
11	N 025 653 2	ball		9	
12	928 304 231 00	shift sleeve		3	
13	928 302 271 01	inner ring		4	
14	999 201 260 00	needle cage		4	
15	-	loose gear wheel 1st gear		1	
16	928 302 267 01	thrust washer		2	
17	-	loose gear wheel 2nd gear		1	
18	-	loose gear wheel 3rd speed		1	
19	-	loose gear wheel 4th speed		1	
20	928 304 221 03	guide sleeve 4th/5th gear		1	
21	928 302 266 09	lock nut		1	
22	928 302 163 00	needle cage		4	
23	928 302 165 01	thrust ring		1	
24	900 040 008 01	cover plate drive shaft		1 1	
26	928 302 152 10	deep-groove ball bearing		1	
27	900 041 019 01	circlip 50 X 2		2	
28	922 421 239 02	clamping piece		1	
29	931 421 240 00	clamping screw		1	
30	928 302 232 00	spring clip		1	
31	928 302 229 10	reversing gear axle		1	
32	-	reverse idler gear		1	
33	999 201 227 00	needle cage		2	
34	E 928 302 233 00	thrust washer		1	
35	-	drive shaft		1	
36	999 152 087 01	snap ring		1	
37	928 302 278 00	support washer		1	
38	-	fixed gear wheel		1	
39	-	fixed gear wheel		1	
40	928 302 279 02	spacer sleeve		1	
41	-	fixed gear wheel		1	
42	928 302 283 00	round seal		1	
43	928 302 036 00	countershaft axle		1	
44	928 302 281 03	thrust washer		1	
45	999 523 102 02	lock washer		7	
46	N 010 244 6	hexagon-head bolt M 8 X 30		7	

- -- E N D -- -

Model	Year	MG	SG	Illustration	Restrictions	Update				
928	86	3	04	304-00		179	14:23	01.09.2004	PORSCHE	PET	PORSCHE

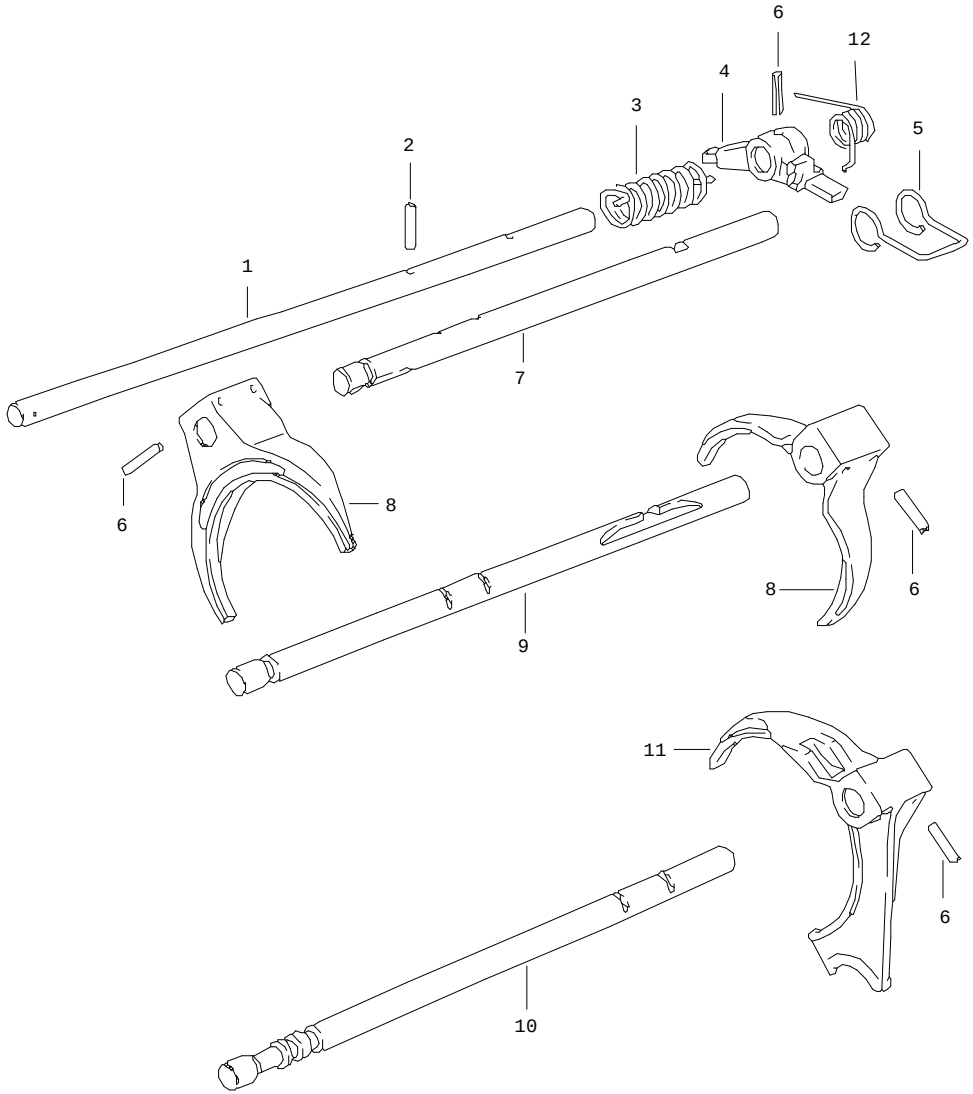

Pos	Part Number	Name	Remarks	Qty	Model
		shift rods forks manual transmission	-84		G28.07/08
1	928 303 107 06	inner shift rod		1	
2	900 309 013 00	roll pin		1	
3	928 303 243 13	torsion spring		1	
4	928 303 117 08	shift finger		1	
5	928 303 244 00	wire clip		1	
6	N 013 317 1	roll pin		7	
7	928 303 102 27	gear shift rod 4th/5th gear		1	
8	928 303 113 24	shift fork 2nd/3rd gear 4th/5th gear		2	
9	928 303 101 07	gear shift rod 2nd/3rd gear		1	
10	928 303 105 20	gear shift rod 1st gear reverse gear		1	
11	928 303 115 36	shift fork 1st gear reverse gear		1	
12	928 303 284 15	torsion spring		1	
		- -- E N D -- -			

Model	Year	MG	SG	Illustration	Restrictions	Update				
928	86	3	04	304-01		179	14:23	01.09.2004	PORSCHE	PET	PORSCHE

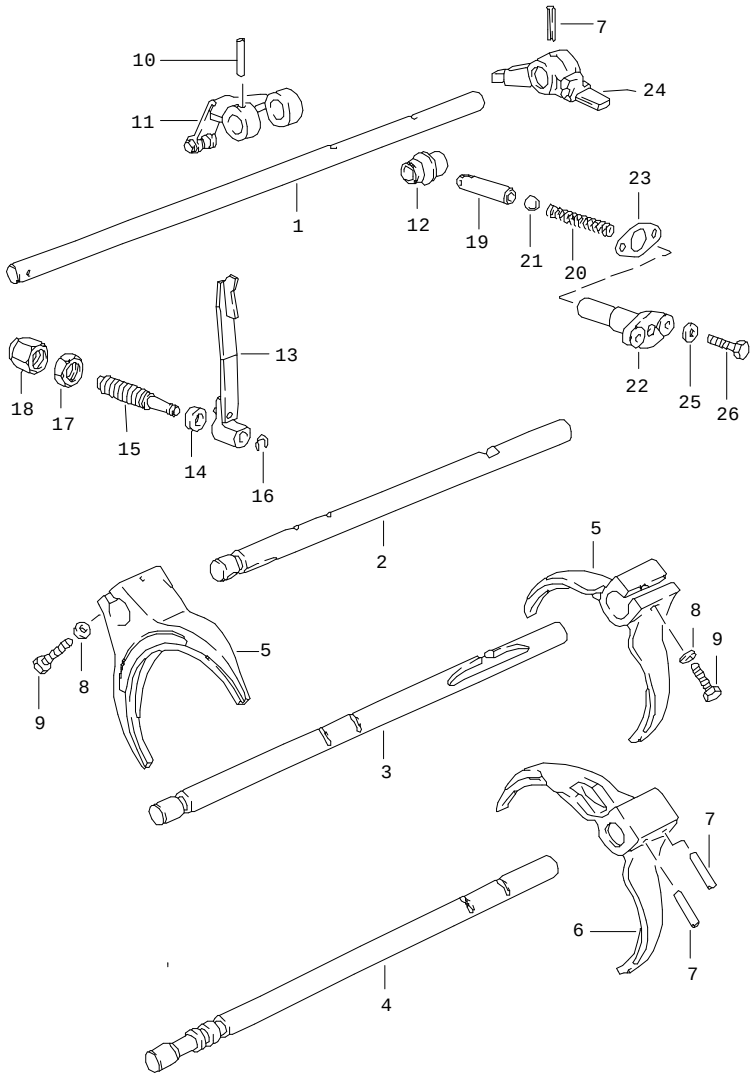

Pos	Part Number	Name	Remarks	Qty	Model
		shift rods forks manual transmission	85-		G28.10/11
1	928 303 107 30	inner shift rod		1	
2	928 303 102 32	gear shift rod 4th/5th gear		1	
(2)	928 303 102 33	gear shift rod 4th/5th gear		1	
3	928 303 101 27	gear shift rod 2nd/3rd gear		1	
4	928 303 105 27	gear shift rod 1st gear reverse gear		1	
5	928 303 113 27	shift fork 2nd/3rd gear 4th/5th gear		2	
6	A 928 303 115 41	shift fork 1st gear reverse gear		1	
(6)	928 303 115 41	shift fork 1st gear reverse gear		1	
7	N 013 317 1	roll pin		3	
8	900 025 007 02	washer A 8,4		2	
9	N 010 359 4	hexagon-head bolt M 8 X 40		2	
10	900 309 013 00	roll pin		1	
11	A 928 303 032 01	preselector lever	85	1	
(11)	928 303 032 06	preselector lever	86	1	
(11)	928 303 032 06	preselector lever		1	
12	928 303 301 03	shift segment		1	
13	928 303 034 03	spring		1	
(13)	928 303 034 09	spring		1	
14	928 303 333 01	washer	85	1	

Pos	Part Number	Name	Remarks	Qty	Model
15	928 303 331 03	threaded bolt M 14 X 1		1	
16	E N 012 410 1	circlip 10 X 1	85	1	
17	999 076 032 02	hexagon nut M 14 X 1		1	
18	999 070 012 02	cap nut M 14 X 1		1	
19	928 303 030 00	bolt		1	
20	928 303 309 01	compression spring		1	
21	900 108 038 00	ball		1	
22	928 303 311 00	guide sleeve		1	
23	928 303 313 00	gasket		1	
24	928 303 117 08	shift finger		1	
25	N 011 524 7	washer A 6,4		2	
26	900 075 016 02	hexagon-head bolt		2	
		- -- E N D -- -			

Pos	Part Number	Name	Remarks	Qty	Model

Model	Year	MG	SG	Illustration	Restrictions	Update	14:24	01.09.2004	PORSCHE	PET	PORSCHE
928	86	3	05	305-00		179					

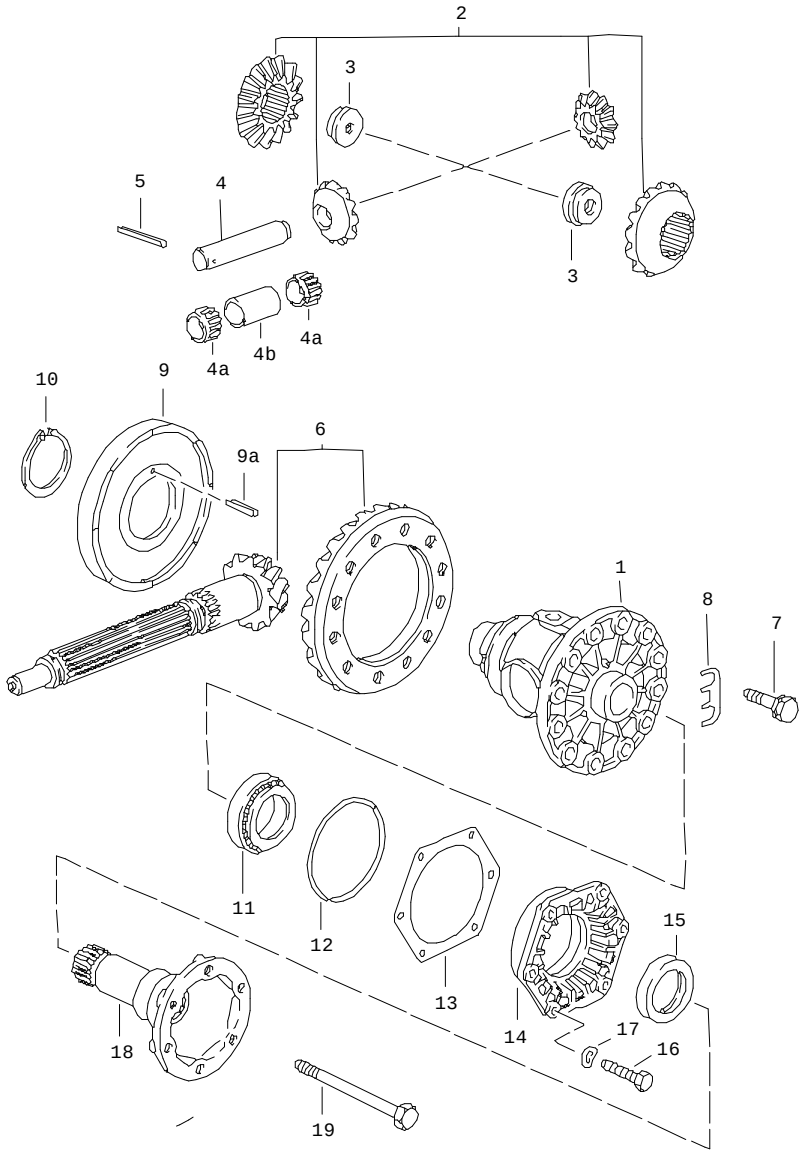

Pos	Part Number	Name	Remarks	Qty	Model
		differential manual transmission	-84 85-		G28.07/08 G28.10/11
1	928 332 212 05	differential housing G >> 11E 00191 G >> 11E 05224		1	 G28.07 G28.08
1	928 332 212 08	differential housing G 11E 00192 >> G 11E 05225 >> G 11F 00001 >> G 11F 05001 >>		1	 G28.07 G28.08 G28.10 G28.11
2	928 332 902 01	differential pinions 1 set G >> 11E 00191 G >> 11E 05224		1	 G28.07 G28.08
2	928 332 902 02	differential pinions 1 set G 11E 00192 >> G 11E 05225 >> G 11F 00001 >> G 11F 05001 >>		1	 G28.07 G28.08 G28.10 G28.11
3	928 332 279 02	nut G >> 11E 00191 G >> 11E 05224		2	 G28.07 G28.08
3	928 332 279 03	nut G 11E 00192 >> G 11E 05225 >> G 11F 00001 >> G 11F 05001 >>		2	 G28.07 G28.08 G28.10 G28.11
4	928 332 207 05	differential bolt 21 MM $ G >> 11E 00191 G >> 11E 05224		1	 G28.07 G28.08
4	928 332 207 07	differential bolt 18 MM $ G 11E 00192 >> G 11E 05225 >> G 11F 00001 >> G 11F 05001 >>		1	 G28.07 G28.08 G28.10 G28.11
4A	999 201 416 00	needle cage G 11E 00192 >> G 11E 05225 >> G 11F 00001 >> G 11F 05001 >>		2	 G28.07 G28.08 G28.10 G28.11
(4A)	999 201 237 00	needle cage		2	

Pos	Part Number	Name	Remarks	Qty	Model
4B	928 332 205 01	spacer sleeve G 11E 00192 >> G 11E 05225 >> G 11F 00001 >> G 11F 05001 >>		1	 G28.07 G28.08 G28.10 G28.11
5	900 309 035 00	roll pin 5 X 40		1	
6	928 302 911 27	ring gear and pinion shaft 11 : 30		1	G28.07
(6)	928 302 911 32	ring gear and pinion shaft 15 : 34		1	G28.08
(6)	928 302 911 55	ring gear and pinion shaft 11 : 30		1	G28.10
(6)	928 302 911 56	ring gear and pinion shaft 15 : 33		1	G28.11
7	928 332 276 03	hexagon-head bolt		12	
8	928 332 285 00	tab washer		6	
9	928 318 024 02	carrier disc with magnets	-85	1	
(9)	928 318 024 05	carrier disc with magnets	86	1	
9A	N 043 285 1	roll pin 5 X 20		1	
10	999 152 089 01	snap ring		1	
11	999 059 027 00	taper roller bearing FAG		2	
12	928 332 217 02	o-ring		2	
13	928 332 219 00	adjusting shim 0,15 MM		X	
(13)	928 332 219 01	adjusting shim 0,20 MM		X	
(13)	928 332 219 02	adjusting shim 0,25 MM		X	
(13)	928 332 219 03	adjusting shim 0,30 MM		X	
(13)	928 332 219 04	adjusting shim 0,10 MM		X	
14	928 332 213 02	housing		2	
15	928 332 215 02	shaft seal		2	
16	900 075 099 02	hexagon-head bolt M 8 X 30		12	
17	900 025 007 02	washer A 8,4		12	
18	928 332 206 00	joint flange	-84	2	G28.07/08
(18)	928 332 206 10	joint flange	85-	2	G28.10/11
19	900 074 292 02	hexagon-head bolt M 10 X 98		2	

- -- E N D -- -

Model	Year	MG	SG	Illustration	Restrictions	Update	14:24	01.09.2004	PORSCHE	PET	PORSCHE
928	86	3	05	305-05		179					

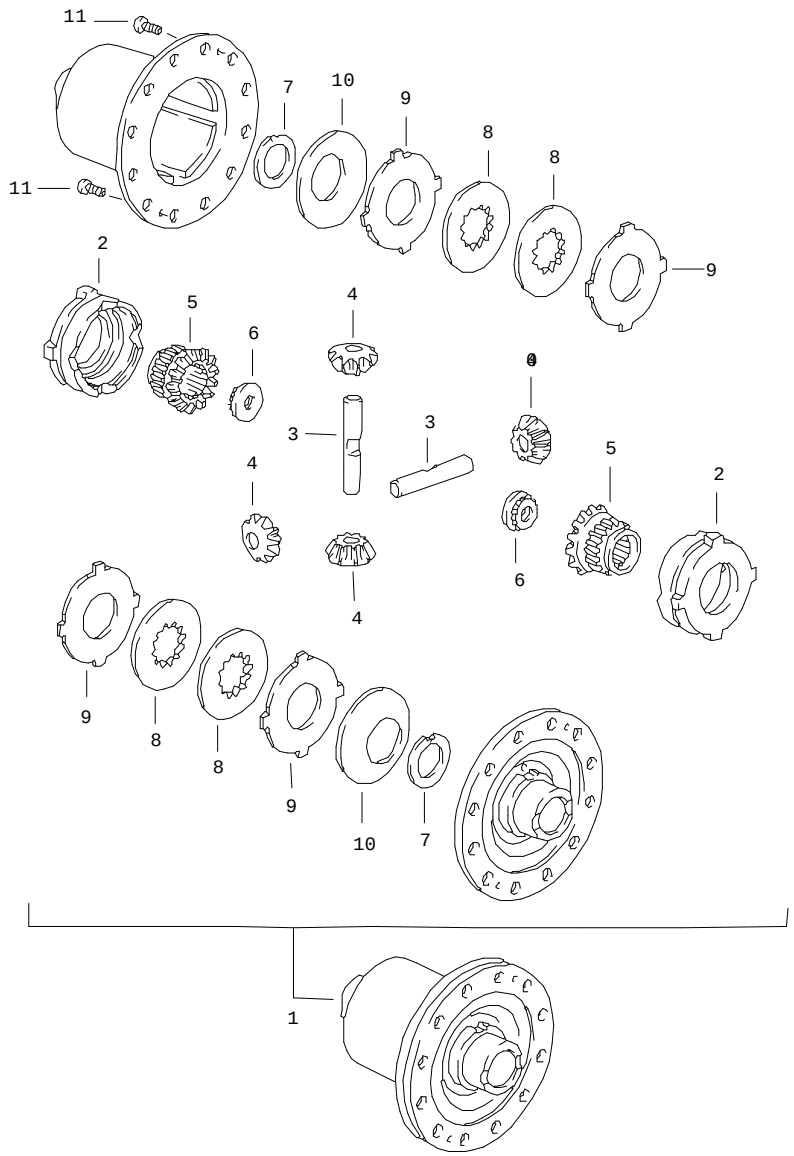

Pos	Part Number	Name	Remarks	Qty	Model
		limited-slip differential manual transmission			G28.07/08 G28.10/11
(1)	928 332 052 20	limit.-slip different. 40%		1	
2	928 332 511 00	thrust ring		2	
3	928 332 541 00	differential shaft		2	
4	928 332 531 00	bevel pinion		4	
5	930 332 535 01	shaft bevel gear	83	2	
(5) E	928 332 535 01	shaft bevel gear	84-	2	
6	928 332 279 01	threaded disc		2	
7	901 332 561 11	thrust washer		2	
8	928 332 551 00	inner disc 2,0 MM		2	
9	917 332 552 10	disc with external splines 1,9 MM		6	
(9)	917 332 552 11	disc with external splines 2,0 MM		X	
(9)	917 332 552 12	disc with external splines 2,1 MM		X	
10	928 332 555 00	cup spring	83	2	
(10)	928 332 555 20	cup spring	84-	2	
11	N 014 765 2	pan-head screw M 6 X 10	83	2	
(11)	900 249 023 00	countersunk-head screw M 6 X 10	84-	2	
		- -- E N D -- -			

Model	Year	MG	SG	Illustration	Restrictions	Update				
928	86	3	06	306-00		179	14:24	01.09.2004	PORSCHE	PET	PORSCHE

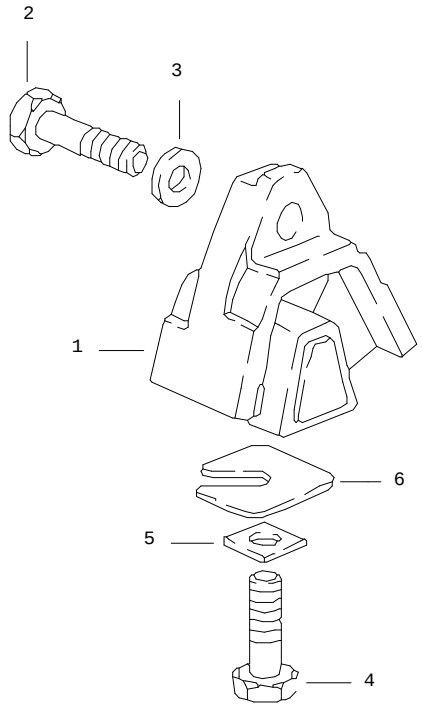

Pos	Part Number	Name	Remarks	Qty	Model
		transmission suspension manual transmission			
1	928 375 045 16	transmission mounting		2	
2	N 010 142 2	hexagon-head bolt M 12 X 1,5 X 50		2	
3	W 901 333 143 01	washer		4	
3	999 025 091 02	washer		2	
4	N 040 108 1	hexagon-head bolt M 12 X 1,5 X 40		2	
5	999 025 086 02	square washer 12,1 X 24		2	
6	928 331 520 01	washer		X	
(6)	928 331 520 02	washer		X	
(6)	928 331 520 03	washer		X	
(6)	928 331 520 04	washer		X	
		- -- E N D -- -			

Model	Year	MG	SG	Illustration	Restrictions	Update				
928	86	3	07	307-00		179	14:25	01.09.2004	PORSCHE	PET	PORSCHE

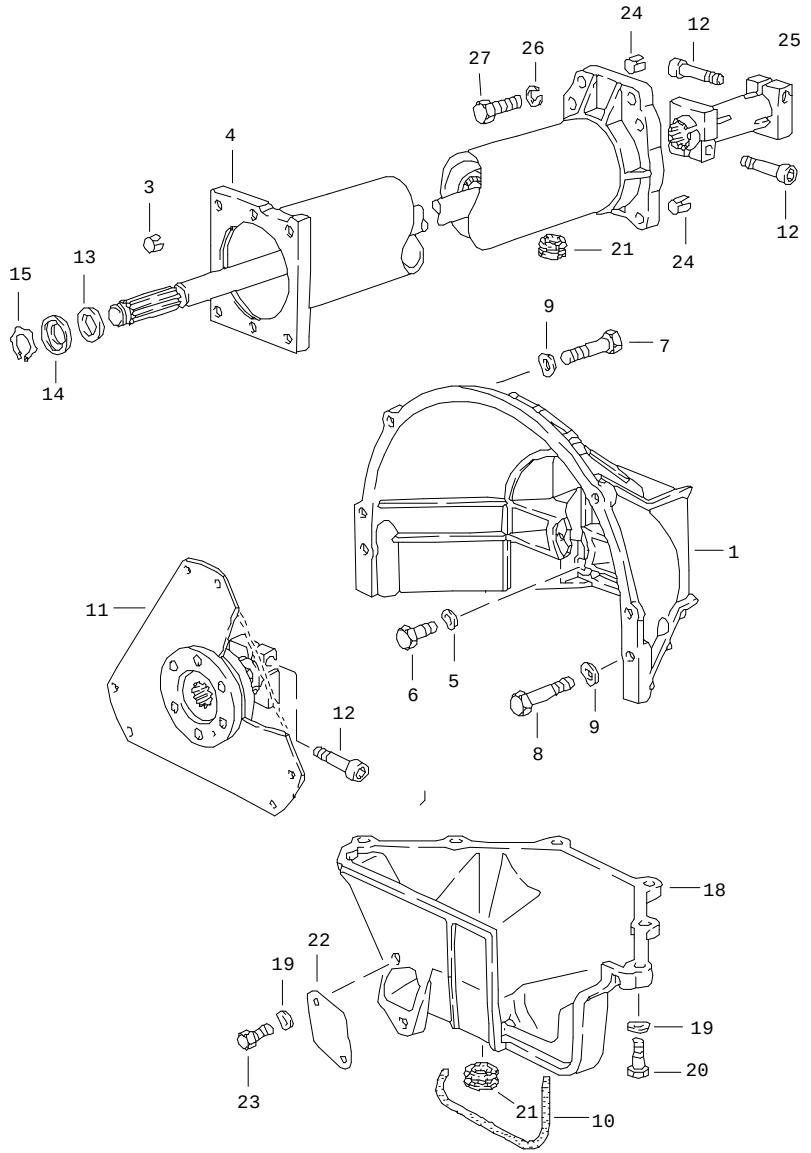

Pos	Part Number	Name	Remarks	Qty	Model
		automatic transmission 3rd speed central tube			A22.04
1	928 116 402 00	clutch housing		1	
2	900 012 110 00	straight pin		2	
3	900 197 042 01	roll pin 10 X 12		2	
4	> 922 421 012 03	central tube ready for installation		1	
5	N 012 230 1	spring washer		4	
6	900 074 059 02	hexagon-head bolt M 10 X 40		4	
7	N 010 142 2	hexagon-head bolt M 12 X 1,5 X 50		2	
8	N 010 165 3	hexagon-head bolt M 12 X 1,5 X 65		2	
9	900 028 014 02	spring washer B 12		4	
11	922 116 041 03	drive plate		1	
12	931 421 240 00	clamping screw		3	
13	900 234 116 02	shim 22 X 32 X 0,5		X	
(13)	900 234 117 02	shim 22 X 32 X 1,0		X	
(13)	900 234 118 02	shim 22 X 32 X 0,2		X	
14	922 421 257 00	bush		1	
15	900 273 003 01	circlip		1	
17	900 075 280 01	hexagon-head bolt M 8 X 18		9	
18	928 116 412 01	cover for clutch housing		1	
19	900 025 007 02	washer		8	

Pos	Part Number	Name	Remarks	Qty	Model	Pos	Part Number	Name	Remarks	Qty	Model
20	900 075 099 02	hexagon-head bolt M 8 X 30		6							
21	928 116 425 00	cap		2							
22	922 116 121 00	cover plate		1							
23	N 010 237 6	hexagon-head bolt M 8 X 12		2							
24	900 197 040 01	roll pin 13 X 16		2							
25	922 421 051 02	clamping sleeve		1							
26	900 027 016 02	lock ring B 10		6							
27	900 075 266 01	hexagon-head bolt M 10 X 45		6							
		- -- E N D -- -									

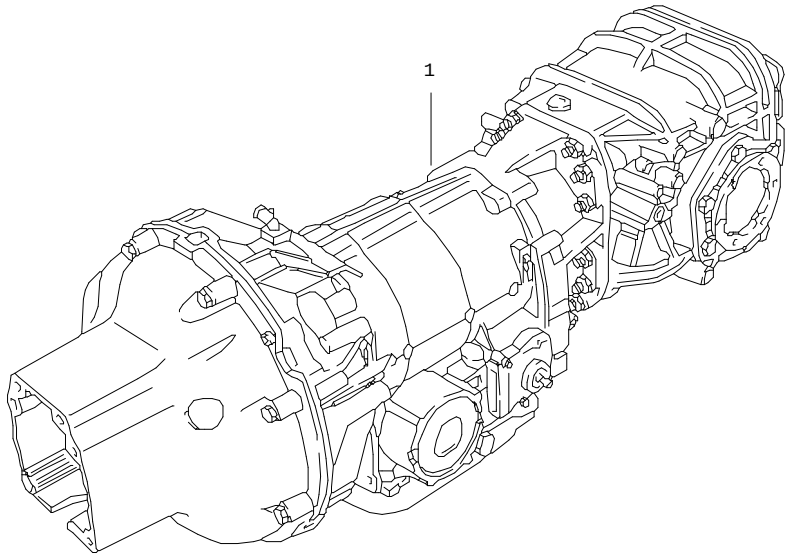

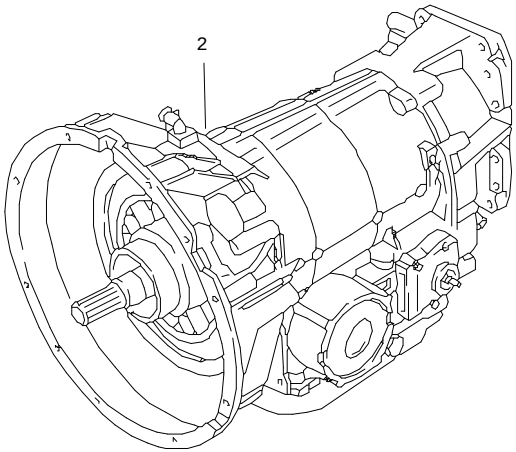

Pos	Part Number	Name	Remarks	Qty	Model
		automatic transmission 3rd speed replacement transmission	83		A22.04
1	A 922 300 003 04	automatic transmission without limited-slip differential		1	
1	A 922 300 903 04	automatic transmission with limited-slip differential		1	
2	A 722 270 060 1	short transmission without converter and differential		1	
		- -- E N D -- -			

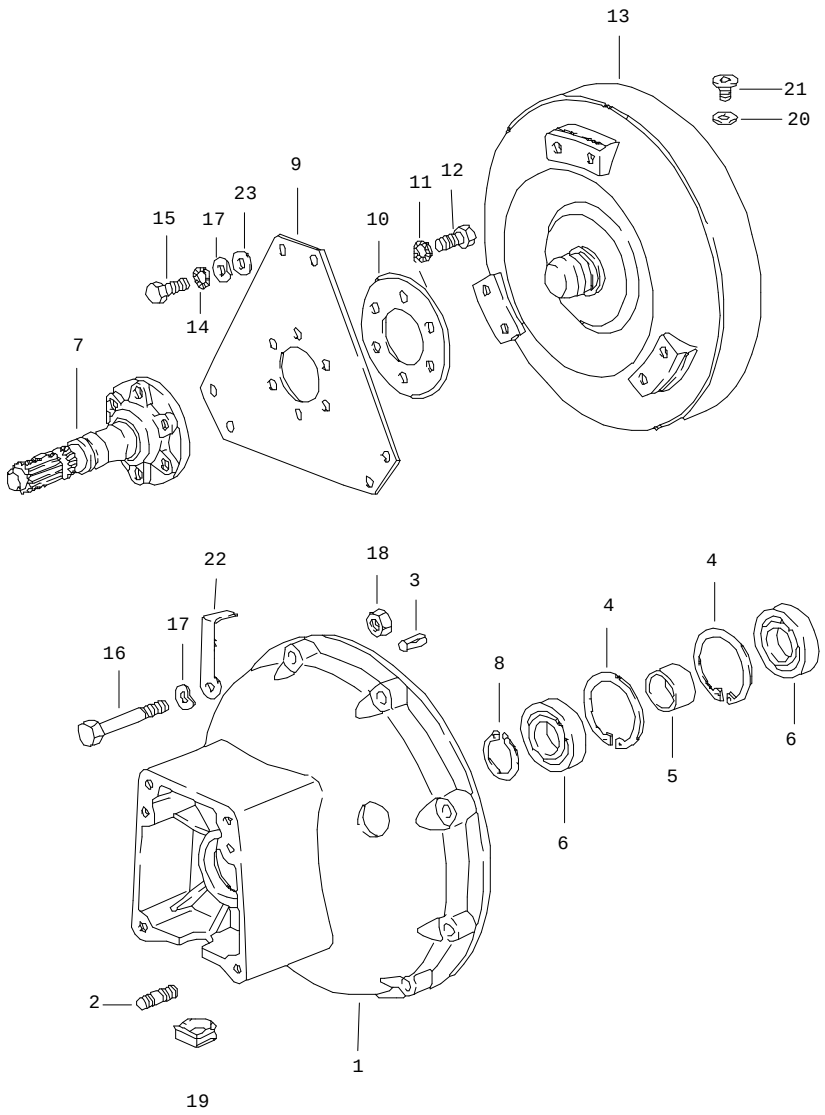

Pos	Part Number	Name	Remarks	Qty	Model
		automatic transmission 3rd speed torque converter converter housing	83		A22.04
1	922 321 101 03	converter housing, front		1	
2	900 061 004 02	stud BM 8 X 12		2	
3	900 185 011 02	grooved pin		1	
4	N 012 319 1	circlip 62 X 2		2	
5	922 321 541 00	spacer sleeve		1	
6	900 052 117 00	deep-groove ball bearing		2	
7	E 922 421 101 04	drive flange		1	
8	N 012 375 1	circlip 30 X 1,5		1	
9	922 116 101 01	drive plate		1	
10	922 116 103 00	packing plate		1	
12	999 217 009 01	screw M 10 X 1,25 X 20		6	
13	123 250 010 2	torque converter		1	
15	900 075 305 01	hexagon-head bolt M 8 X 14		6	
16	900 074 136 02	hexagon-head bolt M 8 X 80		8	
17	N 012 241 8	spring washer B 8		14	
18	900 076 025 02	hexagon nut M 8		1	
19	928 301 171 00	cap		1	
20	900 123 033 20	sealing ring		1	
21	900 219 010 02	screw plug M 10 X 1		1	
22	922 307 135 01	bracket vacuum line		1	

Pos	Part Number	Name	Remarks	Qty	Model	Pos	Part Number	Name	Remarks	Qty	Model
23	900 025 007 02	washer		6							
		- -- E N D -- -									

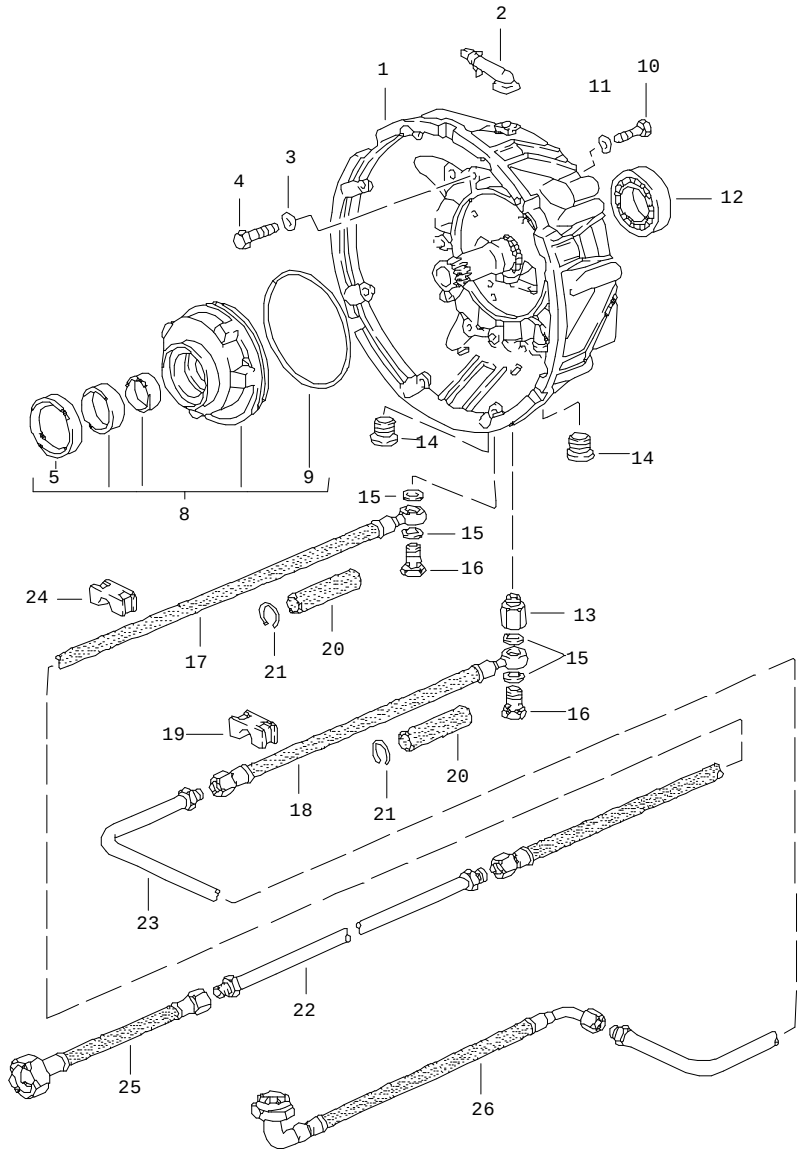

Pos	Part Number	Name	Remarks	Qty	Model
		automatic transmission 3rd speed transmission case 1	83		A22.04
1	722 250 010 5	converter housing rear with shaft		1	
2	115 250 045 7	bleeder		1	
3	722 990 024 0	washer		11	
4	900 074 265 01	hexagon-head bolt M 8 X 60		11	
5	019 997 324 7	sealing ring		1	
8	116 270 009 0	oil pump		1	
9	004 997 054 8	sealing ring		1	
10	N 010 335 5	hexagon-head bolt M 8 X 35		4	
11	N 012 241 8	spring washer B 8		4	
12	900 052 120 00	deep-groove ball bearing 40 X 68 X 9		1	
13	115 257 105 7	union		1	
14	900 219 001 30	screw plug 22 X 1,5		2	
15	900 123 116 30	sealing ring A 12 X 15,5		4	
16	N 021 071 2	banjo bolt		2	
17	922 307 020 00	pressure hose supply 935 MM		1	
18	922 307 021 00	pressure hose return 235 MM		1	
19	922 307 114 02	clamp		5	
20	922 307 121 00	hose piece		2	

Pos	Part Number	Name	Remarks	Qty	Model	Pos	Part Number	Name	Remarks	Qty	Model
21	900 906 024 00	snap ring		2							
22	922 307 018 99	oil pipe supply		1							
23	922 307 019 03	oil pipe return		1							
24	922 307 114 01	clamp		10							
25	922 307 023 02	pressure hose supply 135 MM	83	1							
26	922 307 025 00	pressure hose		1							
		- -- E N D -- -									

Model	Year	MG	SG	Illustration	Restrictions	Update				
928	86	3	07	307-20		179	14:26	01.09.2004	PORSCHE	PET	PORSCHE

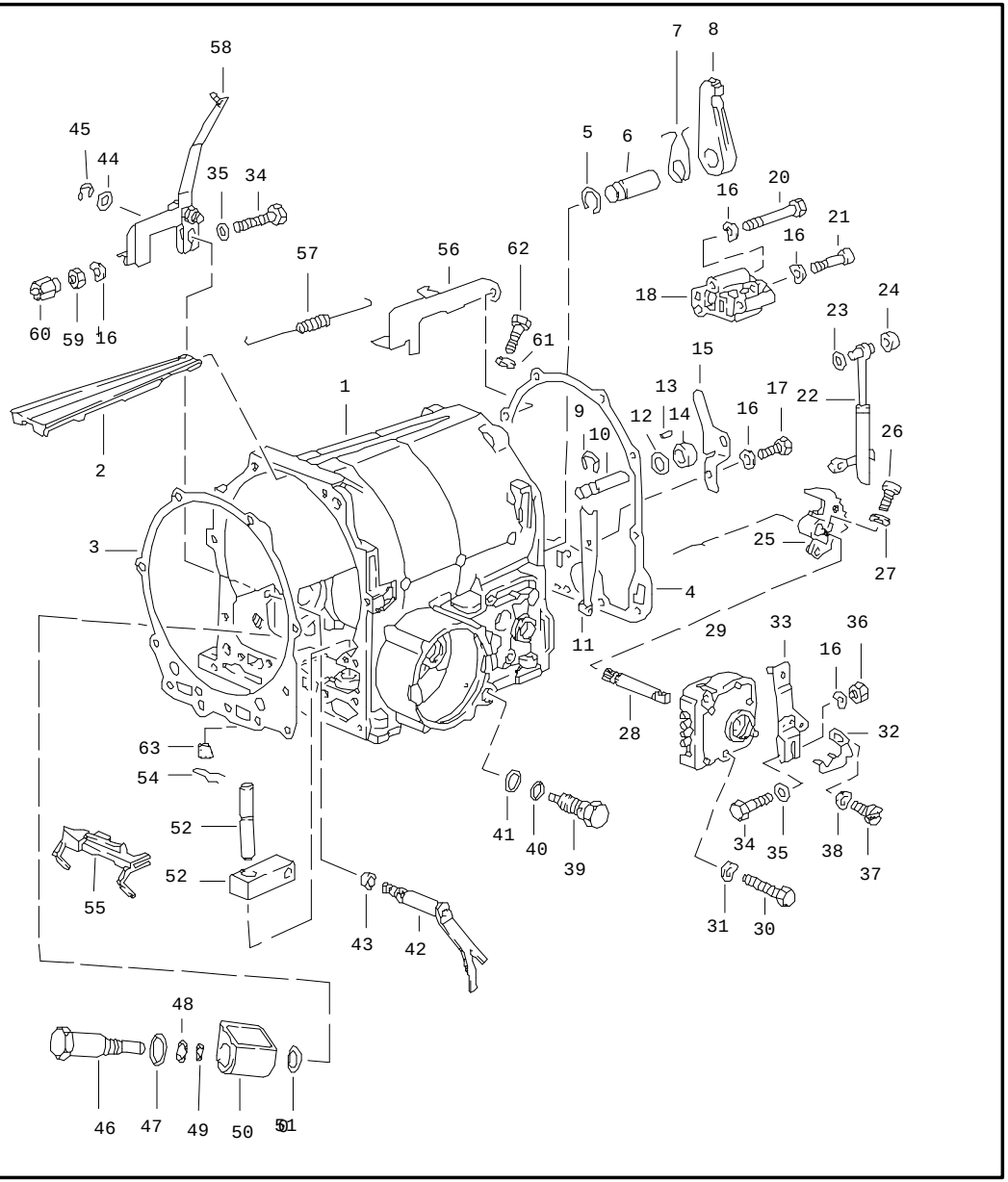

Pos	Part Number	Name	Remarks	Qty	Model
		automatic transmission 3rd speed transmission case 2	83		A22.04
1	116 270 011 1	transmission case		1	
2	116 277 004 0	support upper		1	
3	115 277 338 0	gasket		1	
4	116 271 018 0	gasket		1	
5	000 994 424 1	lock		1	
6	115 278 077 4	bolt		1	
7	115 993 022 2	spring		1	
8	115 278 022 1	pawl		1	
9	900 116 007 01	lock washer		1	
10	115 278 087 4	bolt		1	
11	100 270 017 8	spring		1	
12	115 990 214 0	washer		1	
13	000 981 518 7	needle		23	
14	115 278 041 7	roller		1	
15	115 278 044 0	support		1	
16	N 012 226 5	spring washer B 6		6	
17	N 010 215 13	hexagon-head bolt M 6 X 15		1	
18	722 270 100 7	regulating valve for control pressure		1	
20	900 074 111 02	hexagon-head bolt M 6 X 50		2	
21	900 067 008 02	pan-head screw M 6 X 30		1	
22	116 270 006 5	linkage		1	

Pos	Part Number	Name	Remarks	Qty	Model
23	115 278 006 2	thrust washer		1	
24	115 278 051 7	roller		1	
25	115 270 045 7	shift segment		1	
26	E N 014 774 1	hexagon socket head bolt M 6 X 18		1	
27	N 012 226 5	spring washer A 6		1	
28	115 278 161 0	shaft		1	
29	000 545 420 6	combined switch		1	
30	900 075 287 02	hexagon-head bolt M 5 X 28		2	
31	N 012 222 4	spring washer B 5		2	
32	115 545 014 2	driver		1	
33	922 424 063 00	lever		1	
34	900 074 015 02	hexagon-head bolt M 6 X 30		2	
35	N 011 524 7	washer 6,4		2	
36	900 076 010 02	hexagon nut M 6		1	
37	900 075 106 02	hexagon-head bolt M 4 X 6		1	
38	N 012 224 3	spring washer B 4		1	
39	E 115 270 248 9	valve for reverse gear		1	
40	E 002 997 214 8	sealing ring		1	
41	900 123 019 30	sealing ring A 16 X 22		1	
42	115 270 145 9	lever		1	
43	006 997 614 6	sealing ring		2	
44	115 990 174 0	washer		1	
45	900 116 006 02	lock washer		1	
46	E 000 304 129 0	control magnet		1	
47	010 997 774 5	o-ring 19 X 1,8		1	
48	008 997 304 8	sealing ring 12,5 X 1,5		1	
49	001 997 354 8	sealing ring 6,6 X 1,5		1	
50	000 304 119 0	housing		1	
51	115 304 016 0	sealing ring		1	
52	115 277 042 4	lever		1	
53	115 277 027 4	bolt		1	
54	115 993 022 5	spring		1	
55	115 277 244 0	support		1	
56	922 307 133 03	support		1	
57	922 321 130 04	tension spring		1	
58	922 321 023 06	control pressure lever		1	
59	N 011 116 5	hexagon nut BM 6		1	
60	922 321 129 00	hexagon nut self-locking		1	
61	900 123 105 30	sealing ring A 8 X 14		1	
62	115 997 063 0	screw plug		1	
63	722 271 005 0	rubber bush		1	
		- -- E N D -- -			

Model	Year	MG	SG	Illustration	Restrictions	Update				
928	86	3	07	307-25		179	14:26	01.09.2004	PORSCHE	PET	PORSCHE

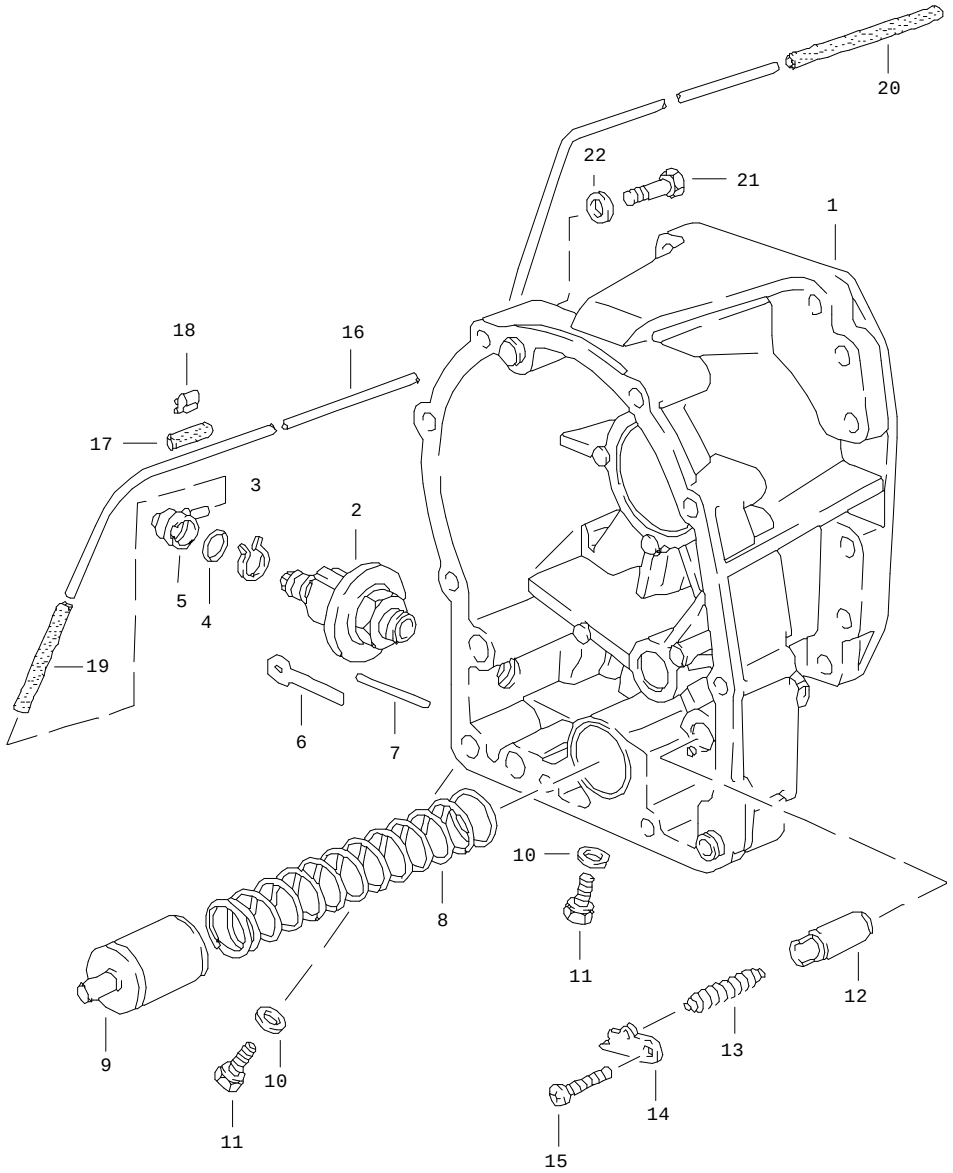

Pos	Part Number	Name	Remarks	Qty	Model
		automatic transmission 3rd speed transmission case 3	83		A22.04
1	722 270 011 1	transmission case		1	
2	123 270 007 9	diaphragm		1	
3	115 994 293 5	snap ring		1	
4	002 997 574 8	sealing ring		1	
5	116 276 018 3	cap		1	
6	114 277 024 0	support		1	
7	123 277 027 5	pin 39,15 MM		1	
(7)	115 277 297 5	pin 39,65 MM		1	
(7)	115 277 307 5	pin 40,15 MM		X	
8	115 993 050 4	spring		1	
9	115 277 503 8	piston		1	
10	900 123 105 30	sealing ring A 8 X 14		2	
11	115 997 063 0	screw plug		2	
12	115 277 413 1	piston		1	
13	115 993 340 4	spring		1	
14	115 277 274 0	support		1	
15	900 146 037 02	oval-head screw M 5 X 16		1	
16	922 307 131 01	pipeline		1	
-	999 181 167 50	hose 4,5 X 9,5		*	
17	-	20 MM		3	
18	999 651 159 02	cable clamp		2	

Pos	Part Number	Name	Remarks	Qty	Model	Pos	Part Number	Name	Remarks	Qty	Model
-	999 239 003 40	hose 3,2 X 7		*							
19	-	60 MM		1							
20	-	120 MM		1							
21	900 074 265 01	hexagon-head bolt M 8 X 60		10							
22	722 990 024 0	washer		10							
		- -- E N D -- -									

Model	Year	MG	SG	Illustration	Restrictions	Update				
928	86	3	07	307-30		179	14:26	01.09.2004	PORSCHE	PET	PORSCHE

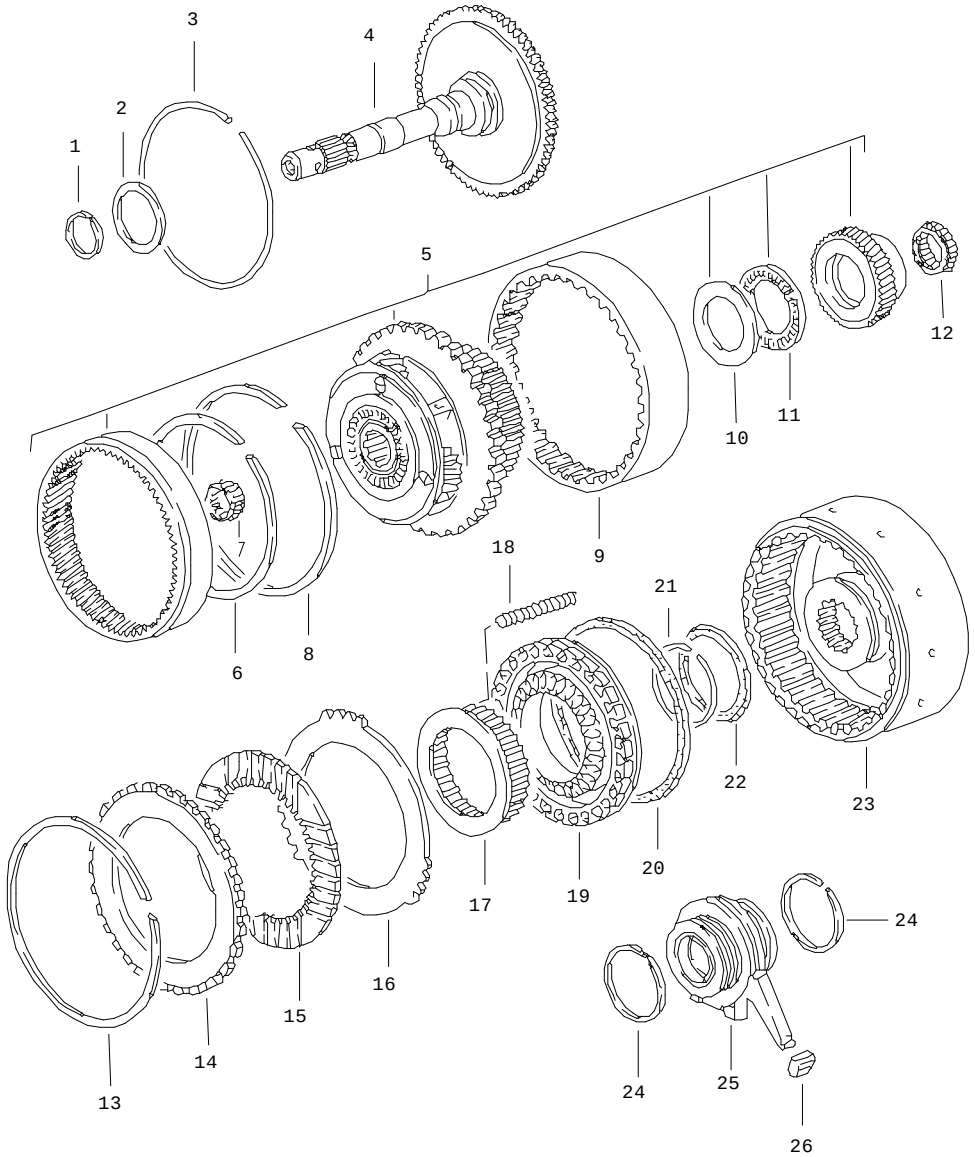

Pos	Part Number	Name	Remarks	Qty	Model
		automatic transmission 3rd speed gears and shafts 1	83		A22.04
1	100 272 045 5	sealing ring		1	
2	100 272 125 2	spacer 0,1 MM		X	
(2)	100 272 135 2	spacer 0,2 MM		X	
(2)	100 272 145 2	spacer 0,5 MM		X	
3	115 272 027 3	snap ring		1	
4	116 270 092 5	drive shaft		1	
5	722 270 104 3	planet-gear carrier		1	
6	115 272 047 3	circlip		1	
7	001 981 801 0	needle-roller bearing		1	
8	112 994 073 5	snap ring		1	
9	116 272 002 7	support		1	
10	100 272 085 2	spacer 0,1 MM		X	
(10)	100 272 095 2	spacer 0,2 MM		X	
(10)	100 272 105 2	spacer 0,5 MM		X	
11	000 981 991 0	needle-roller bearing		1	
12	002 981 321 0	needle-roller bearing		2	
13	115 272 127 3	circlip		1	
14	109 272 182 6	disc with external splines 5,0 MM		1	
15	115 272 002 5	inner disc 2,0 MM		6	
16	109 272 062 6	disc with external splines 3,0 MM		6	

Pos	Part Number	Name	Remarks	Qty	Model
(16)	109 272 082 6	disc with external splines 3,5 MM		X	
17	100 272 026 4	concave washer		1	
18	100 993 020 2	spring		28	
19	116 270 163 2	piston		1	
20	109 272 099 2	boot		1	
21	115 994 083 5	snap ring		1	
22	115 272 149 2	boot		1	
23	116 270 242 0	flange		1	
24	115 272 065 5	sealing ring		4	
25	115 270 215 0	bush		1	
26	115 272 079 2	boot		1	
		- -- E N D -- -			

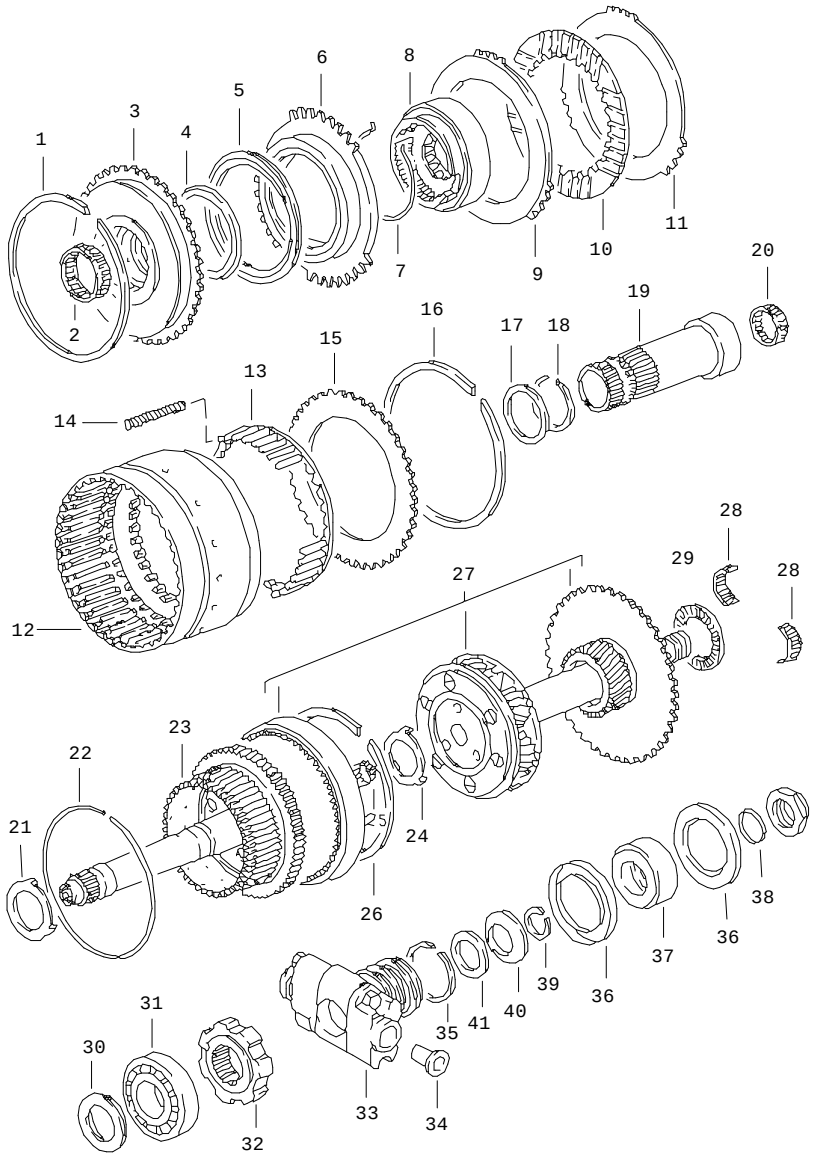

Pos	Part Number	Name	Remarks	Qty	Model
		automatic transmission 3rd speed gears and shafts 2	83		A22.04
1	115 272 047 3	circlip		1	
2	002 981 311 0	needle-roller bearing		1	
3	116 270 202 0	flange		1	
4	109 272 049 2	boot		1	
5	115 272 169 2	boot		1	
6	116 272 023 1	piston		1	
7	109 994 003 5	snap ring		1	
8	100 270 003 1	free wheel lock		1	
9	109 272 222 6	disc with external splines 4,5 MM		1	
(9)	109 272 232 6	disc with external splines 5,0 MM		X	
10	115 272 002 5	inner disc 2,0 MM		6	
11	109 272 062 6	disc with external splines 3,0 MM		4	
(11)	109 272 082 6	disc with external splines 3,5 MM		X	
(11)	109 272 152 6	disc with external splines 2,0 MM		1	
12	100 272 412 4	disc carrier		1	
13	109 272 036 7	concave washer		1	
14	100 993 880 1	spring		18	
15	109 272 212 6	disc with external splines 5,0 MM		1	
16	115 272 137 3	circlip		1	
17	100 272 125 2	spacer 0,1 MM		1	

Model	Year	MG	SG	Illustration	Restrictions	Update				
928	86	3	07	307-35		179	14:27	01.09.2004	PORSCHE	PET	PORSCHE

Pos	Part Number	Name	Remarks	Qty	Model
(17)	100 272 135 2	spacer 0,2 MM		X	
(17)	100 272 145 2	spacer 0,5 MM		X	
18	N 012 382 1	circlip 40 X 1,75		1	
19	100 272 392 0	shaft		1	
20	002 981 321 0	needle-roller bearing		2	
21	115 272 346 2	thrust washer		1	
22	112 994 073 5	snap ring 125 MM		1	
23	116 270 132 5	drive shaft		1	
24	E 722 272 016 2	thrust washer		1	
25	002 981 301 0	needle-roller bearing		1	
26	115 272 027 3	snap ring 130 MM		1	
(27)	722 270 114 3	planet-gear carrier		1	
28	A 007 981 391 0	needle-roller bearing		1	
28	007 981 391 0	needle-roller bearing		1	
29	004 981 401 0	needle-roller bearing		1	
30	115 272 376 2	thrust washer		1	
31	001 981 182 5	ball bearing		1	
32	722 272 001 7	gear wheel		1	
33	722 270 027 4	regulator		1	
34	115 270 009 8	strainer		2	
35	115 272 135 5	sealing ring		3	
36	922 321 301 07	sealing ring		2	
37	922 302 404 00	spacer ring		1	
38	922 302 402 01	o-ring		1	
39	722 994 003 5	snap ring		1	
40	722 993 002 6	cup spring		1	
41	900 234 082 01	shim		1	

- -- E N D -- -

Model	Year	MG	SG	Illustration	Restrictions	Update				
928	86	3	07	307-40		179	14:27	01.09.2004	PORSCHE	PET	PORSCHE

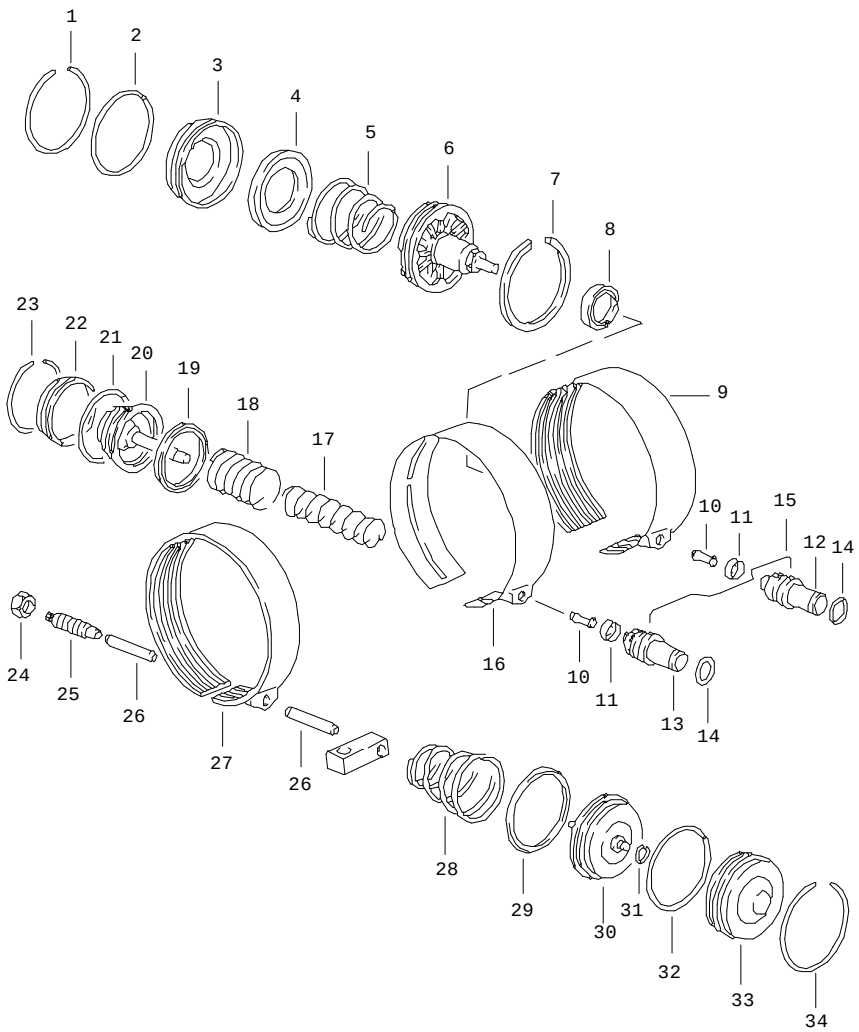

Pos	Part Number	Name	Remarks	Qty	Model
		automatic transmission 3rd speed brake bands	83		A22.04
1	E 115 994 273 5	snap ring		1	
2	000 997 484 8	sealing ring		1	
3	115 277 420 3	cover		1	
4	115 277 177 7	guide piece		1	
5	115 993 230 5	spring		1	
6	115 270 693 2	piston		1	
7	115 277 075 5	sealing ring		1	
8	115 272 119 2	boot		1	
9	115 270 726 2	brake band		1	
10	109 277 027 5	pin 23 MM		1	
(10)	109 277 037 5	pin 24 MM		X	
(10)	109 277 047 5	pin 25 MM		X	
(10)	109 277 057 5	pin 26 MM		X	
11	115 277 175 8	support		2	
12	109 270 118 9	valve B 2		1	
13	109 270 108 9	valve B 1		1	
14	010 997 084 5	sealing ring		2	
15	115 993 002 2	retainer spring		1	
16	A 115 270 696 2	brake band		1	
16	115 270 696 2	brake band without asbestos		1	
17	115 993 550 3	spring		1	
18	115 993 540 3	spring		1	

Pos	Part Number	Name	Remarks	Qty	Model	Pos	Part Number	Name	Remarks	Qty	Model
19	115 272 109 2	boot		1							
20	115 270 663 2	piston		1							
21	000 997 474 8	sealing ring		1							
22	115 277 410 3	cover		1							
23	115 994 263 5	snap ring		1							
24	115 990 045 1	hexagon nut M 14 X 1,5		1							
25	115 277 177 1	shear bolt		1							
26	115 277 537 5	pin		2							
27	A 116 270 186 2	brake band		1							
27	116 270 186 2	brake band without asbestos		1							
28	115 993 180 5	spring		1							
29	115 272 089 2	boot		1							
30	115 270 743 2	piston		1							
31	115 994 173 5	snap ring		1							
32	008 997 354 5	sealing ring		1							
33	115 277 370 3	cover		1							
34	115 994 303 5	snap ring		1							
		- -- E N D -- -									

Model	Year	MG	SG	Illustration	Restrictions	Update	14:27	01.09.2004	PORSCHE	PET	PORSCHE
928	86	3	07	307-45		179					

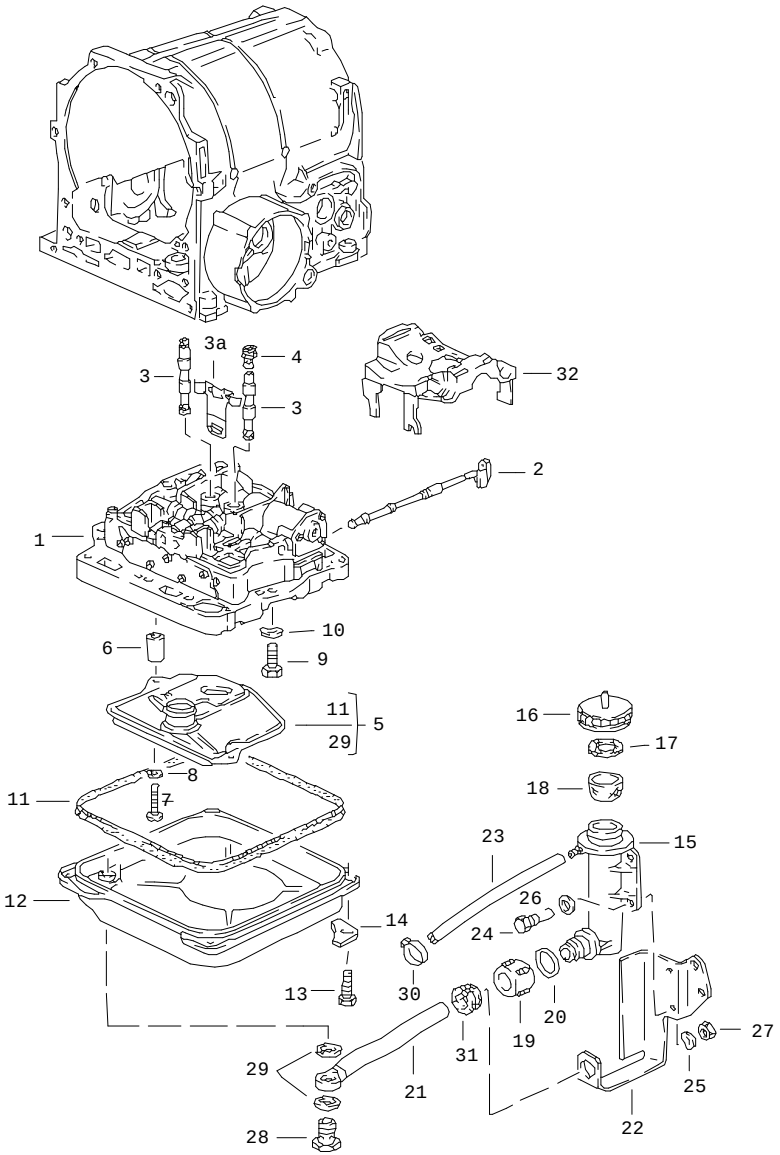

Pos	Part Number	Name	Remarks	Qty	Model
		automatic transmission 3rd speed hydraulic control unit	83		A22.04
1	> 722 270 110 7	valve body		1	
2	115 270 047 0	regulating valve		1	
3	115 270 106 8	guide tube		2	
3A	115 277 284 0	support		2	
4	115 277 335 0	bush		4	
5	E 123 270 009 8	oil filter set		1	
6	123 277 005 3	spacer tube		2	
7	900 146 010 02	oval-head screw M 5 X 30		2	
8	N 012 225 2	spring washer		2	
9	900 075 030 02	hexagon-head bolt M 8 X 28		11	
10	E 900 028 004 01	spring washer A 8		11	
11	A 115 271 158 0	oil sump gasket		1	
12	123 270 011 2	oil pan		1	
13	900 075 079 02	hexagon-head bolt M 8 X 22		4	
14	115 271 019 4	shim		4	
15	922 321 535 00	container		1	
16	477 321 481	cap		1	
17	477 321 483 A	gasket		1	
18	477 321 479 A	strainer		1	
19	922 321 533 00	union nut		1	
20	922 321 537 00	o-ring 15 X 3,5		1	
21	922 321 051 05	filler tube		1	
22	922 321 519 02	support		1	

Pos	Part Number	Name	Remarks	Qty	Model
23	922 321 539 00	hose		1	
24	900 075 057 02	hexagon-head bolt M 6 X 16		2	
25	N 012 006 4	lock ring B 6		2	
26	N 011 524 7	washer 6,4		2	
27	900 076 010 02	hexagon nut M 6		2	
28	115 990 016 3	banjo bolt		1	
29	900 123 007 30	sealing ring A 14 X 18		2	
30	999 512 082 02	hose clamp S 10/9		1	
31	900 622 015 40	grommet A 14 - 1,5		1	
32	115 277 294 0	brake band support		1	
-	722 277 001 4	intermediate plate		1	
-	116 277 088 0	gasket		1	
		- -- E N D -- -			

Model	Year	MG	SG	Illustration	Restrictions	Update				
928	86	3	07	307-50		179	14:27	01.09.2004	PORSCHE	PET	PORSCHE

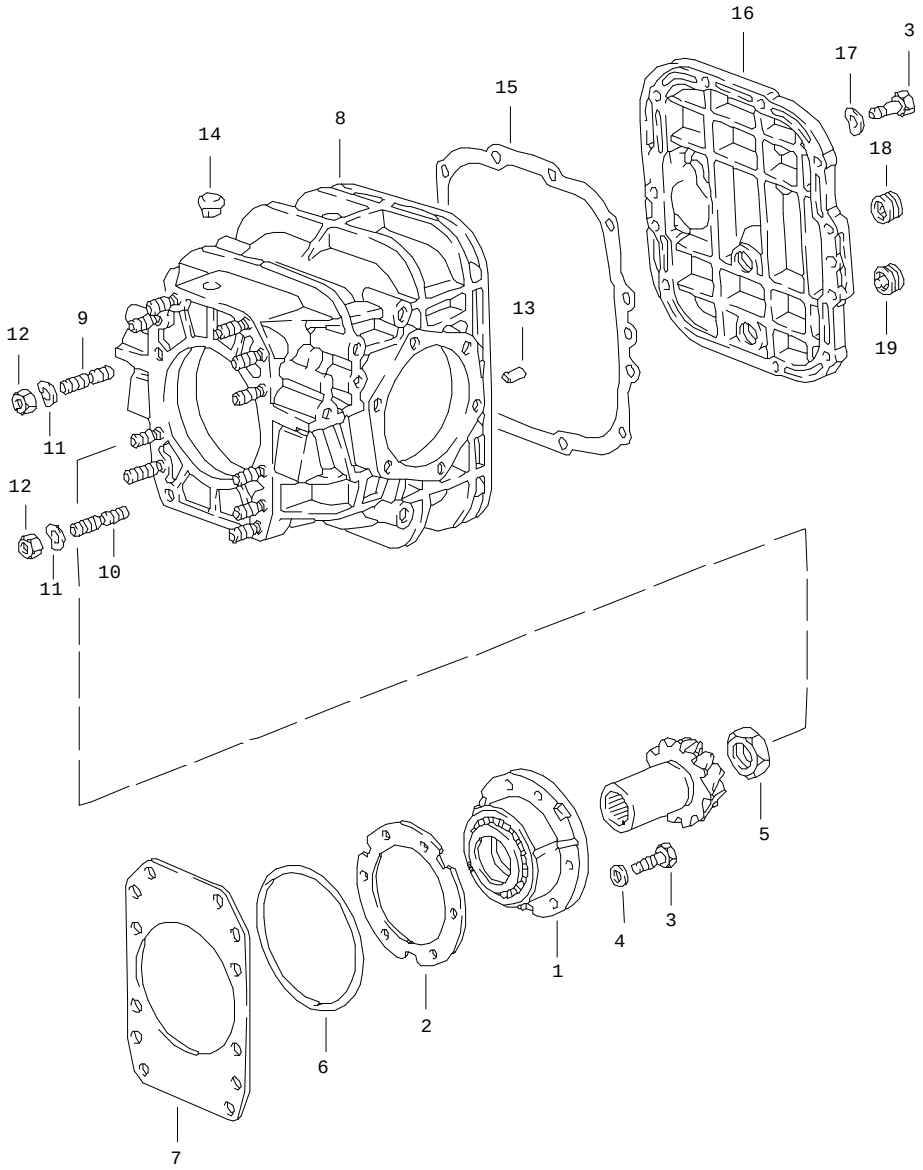

Pos	Part Number	Name	Remarks	Qty	Model
		automatic transmission 3rd speed differential 1	83		A22.04
1	922 302 063 19	bearing sleeve		1	
2	922 302 298 00	adjusting shim 0,15		X	
(2)	922 302 298 01	adjusting shim 0,20		X	
(2)	922 302 298 02	adjusting shim 0,25		X	
(2)	922 302 298 03	adjusting shim 0,40		X	
(2)	922 302 298 04	adjusting shim 0,50		X	
3	N 010 244 6	hexagon-head bolt M 8 X 30		18	
4	999 523 102 02	lock washer		6	
5	922 302 282 00	collar nut		1	
6	922 321 311 00	round seal		1	
7	922 302 297 00	adjusting shim 0,15		X	
(7)	922 302 297 01	adjusting shim 0,20		X	
(7)	922 302 297 02	adjusting shim 0,25		X	
(7)	922 302 297 03	adjusting shim 0,40		X	
(7)	922 302 297 04	adjusting shim 0,50		X	
8	922 321 041 01	rear axle housing		1	
9	999 062 086 02	stud BM 10 X 30		10	
10	999 062 210 02	stud BM 10 X 35		2	

Pos	Part Number	Name	Remarks	Qty	Model	Pos	Part Number	Name	Remarks	Qty	Model
11	N 012 230 1	spring washer B 10		12							
12	N 011 010 6	hexagon nut M 10		12							
13	900 012 086 00	straight pin		2							
14	928 301 311 01	bleeder		1							
15	928 301 395 03	gasket		1							
16	928 301 305 09	housing cover		1							
17	N 012 241 8	spring washer B 8		12							
18	999 064 019 02	screw plug		1							
19	999 064 020 02	screw plug		1							
		- -- E N D -- -									

Model	Year	MG	SG	Illustration	Restrictions	Update				
928	86	3	07	307-55		179	14:28	01.09.2004	PORSCHE	PET	PORSCHE

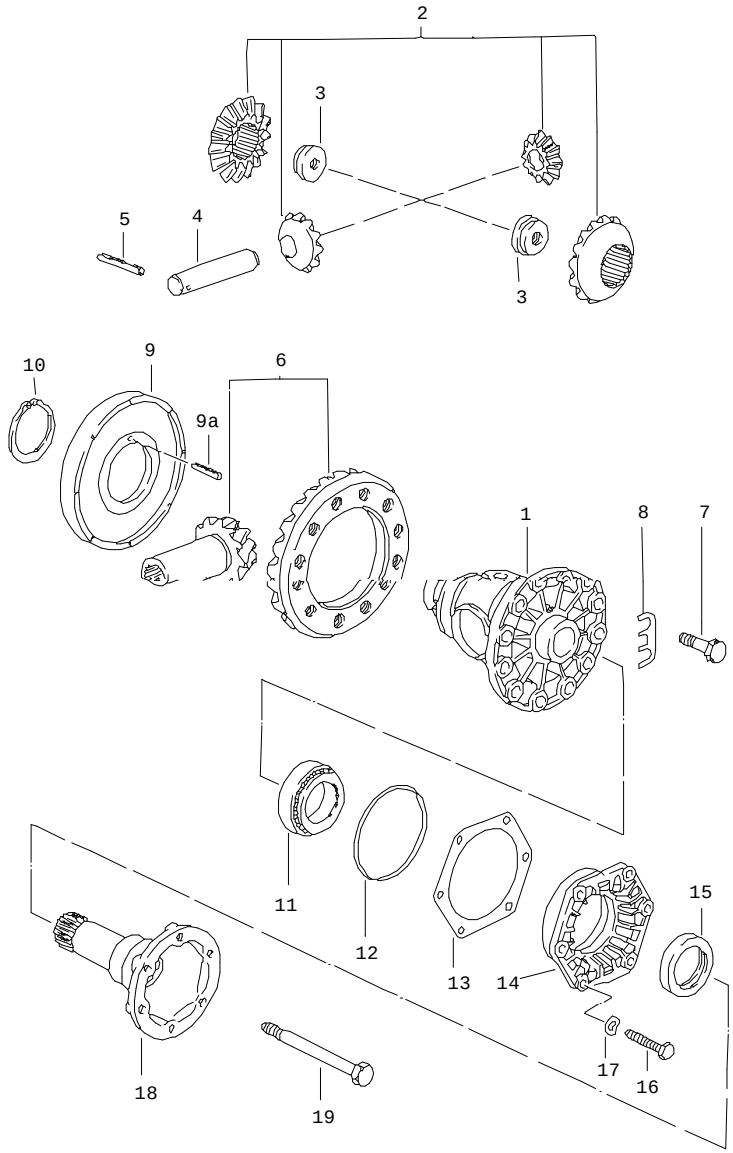

Pos	Part Number	Name	Remarks	Qty	Model
		automatic transmission 3rd speed differential 2			A22.04
1	928 332 212 05	differential housing		1	
2	928 332 902 01	differential pinions 1 set		1	
3	928 332 279 02	nut		2	
4	928 332 207 05	differential bolt 21 MM $		1	
5	900 309 035 00	roll pin 5 X 40		1	
6	922 302 911 03	ring gear and pinion shaft 33:12		1	
7	928 332 276 03	hexagon-head bolt		12	
8	928 332 285 00	tab washer		6	
9	928 318 024 02	carrier disc with magnets		1	
9A	N 043 285 1	roll pin 5 X 20		1	
10	999 152 089 01	snap ring		1	
11	999 059 027 00	taper roller bearing		2	
12	928 332 217 02	o-ring		2	
13	928 332 219 00	adjusting shim 0,15		X	
(13)	928 332 219 01	adjusting shim 0,20		X	
(13)	928 332 219 02	adjusting shim 0,25		X	
(13)	928 332 219 03	adjusting shim 0,50		X	
(13)	928 332 219 04	adjusting shim 0,10		X	
14	928 332 213 02	housing		2	
15	928 332 215 02	shaft seal		2	

Model	Year	MG	SG	Illustration	Restrictions	Update				
928	86	3	07	307-55		179	14:28	01.09.2004	PORSCHE	PET	PORSCHE

Pos	Part Number	Name	Remarks	Qty	Model	Pos	Part Number	Name	Remarks	Qty	Model
16	900 075 099 02	hexagon-head bolt M 8 X 30		12							
17	N 012 241 1	spring washer B 8		12							
18	928 332 206 00	joint flange		2							
19	900 074 292 02	hexagon-head bolt M 10 X 98		2							
		- -- E N D -- -									

Model	Year	MG	SG	Illustration	Restrictions	Update				
928	86	3	07	307-60		179	14:28	01.09.2004	PORSCHE	PET	PORSCHE

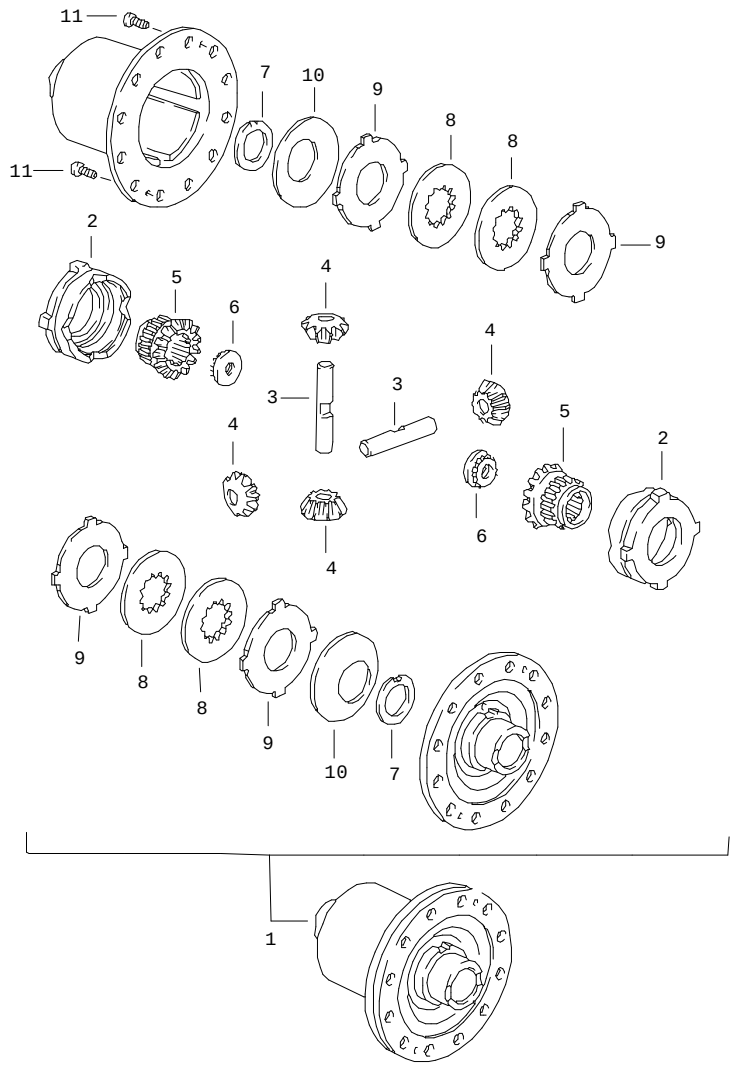

Pos	Part Number	Name	Remarks	Qty	Model
		automatic transmission 3rd speed limited-slip differential	83		A22.04
1	928 332 052 04	limit.-slip different. 40%		1	
2	928 332 511 00	thrust ring		2	
3	928 332 541 00	differential shaft		2	
4	928 332 531 00	bevel pinion		4	
5	930 332 535 01	shaft bevel gear		2	
6	928 332 279 01	threaded disc		2	
7	901 332 561 11	thrust washer		2	
8	928 332 551 00	inner disc 2,0 MM		2	
9	917 332 552 10	disc with external splines 1,9 MM		6	
(9)	917 332 552 11	disc with external splines 2,0 MM		X	
(9)	917 332 552 12	disc with external splines 2,1 MM		X	
10	928 332 555 00	cup spring		2	
11	N 014 765 2	pan-head screw M 6 X 10		2	

- -- E N D -- -

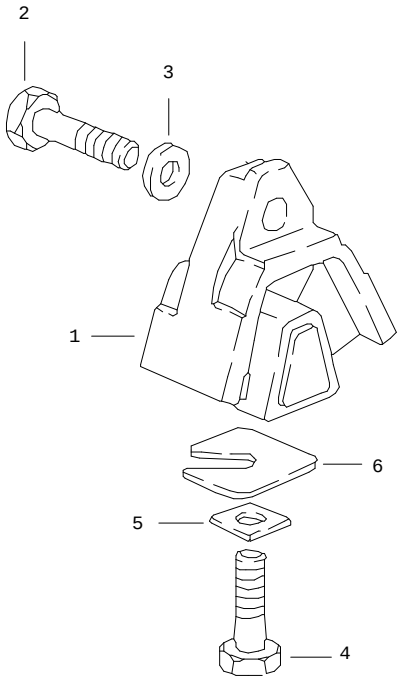

Pos	Part Number	Name	Remarks	Qty	Model
		automatic transmission 3rd speed transmission suspension	83		A22.04
1	928 375 045 16	transmission mounting		2	
2	N 010 142 2	hexagon-head bolt M 12 X 1,5 X 50		2	
3	W 901 333 143 01	washer		4	
3	999 025 091 02	washer		2	
4	N 040 108 1	hexagon-head bolt M 12 X 1,5 X 40		2	
5	928 375 331 00	square washer		2	
6	928 331 520 01	washer 1 MM		X	
6	928 331 520 02	washer 2 MM		X	
6	928 331 520 03	washer 3 MM		X	
6	928 331 520 04	washer 4 MM		X	
		- -- E N D -- -			

Model	Year	MG	SG	Illustration	Restrictions	Update				
928	86	3	08	308-00		179	14:28	01.09.2004	PORSCHE	PET	PORSCHE

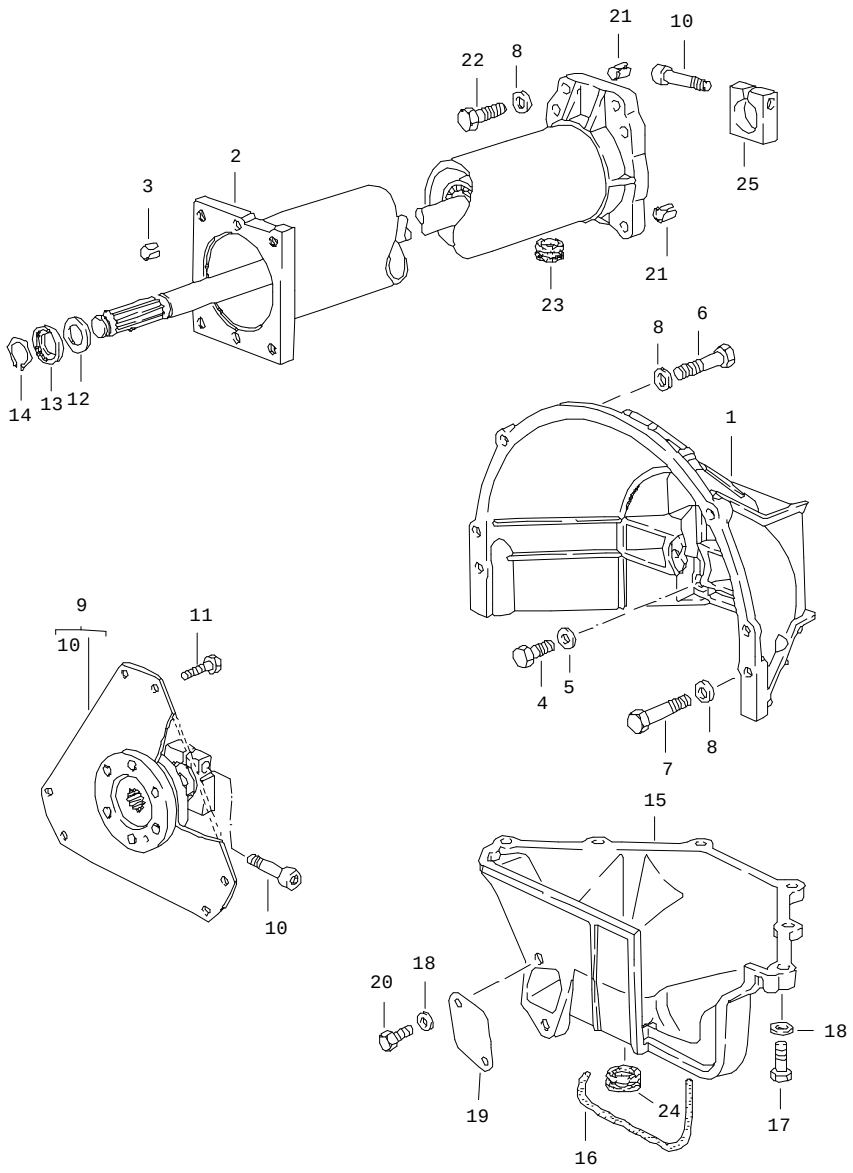

Pos	Part Number	Name	Remarks	Qty	Model
		automatic transmission 4th speed central tube			A28.01/02/03 A28.04/05/06 A28.07/08/09 A28.11
1	928 116 402 00	clutch housing		1	
2	960 421 012 02	central tube ready for installation	-84	1	
3	900 197 042 01	roll pin 10 X 12		2	
4	N 010 445 2	hexagon-head bolt BM 10 X 45		4	
5	900 025 008 09	washer A 10,5		4	
6	N 010 142 2	hexagon-head bolt M 12 X 1,5 X 50		2	
7	N 010 165 3	hexagon-head bolt M 12 X 1,5 X 65		2	
8	N 011 531 14	washer A 13		8	
9	922 116 041 03	drive plate		1	
10	931 421 240 00	clamping screw		2	
11	003 323 699 A	hexagon-head bolt		2	
12	900 234 116 02	shim 22 X 32 X 0,5		X	
(12)	900 234 117 02	shim 22 X 32 X 1,0		X	
(12)	900 234 118 02	shim 22 X 32 X 1,5		X	
13	922 421 257 00	bush		1	
14	900 273 003 01	circlip 22 X 1,2		1	
15	928 116 412 01	cover for clutch housing		1	
16	928 116 427 02	sealing strip 10 X 340		1	

Pos	Part Number	Name	Remarks	Qty	Model
17	900 075 099 02	hexagon-head bolt M 8 X 30		6	
18	900 025 007 02	washer A 8,4		8	
19	922 116 121 00	cover plate		1	
20	N 010 237 6	hexagon-head bolt M 8 X 12		2	
21	900 197 044 01	tensioning sleeve 16 X 16		2	
22	900 082 072 01	hexagon-head bolt M 12 X 1,5 X 50		4	
23	477 521 177	cap		1	
24	928 116 425 00	cap		1	
25	922 421 239 02	clamping piece		1	
		- -- E N D -- -			

Pos	Part Number	Name	Remarks	Qty	Model

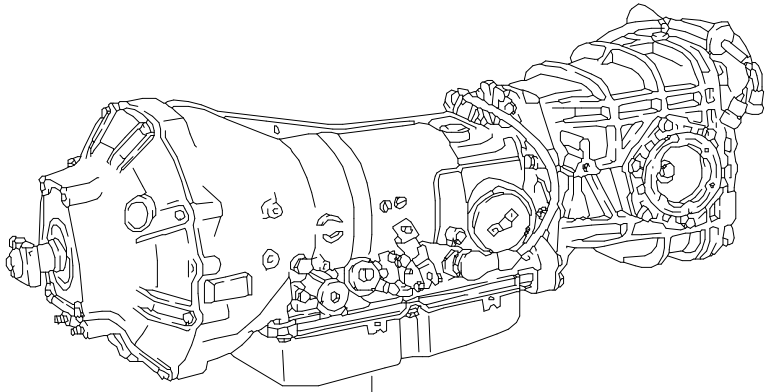

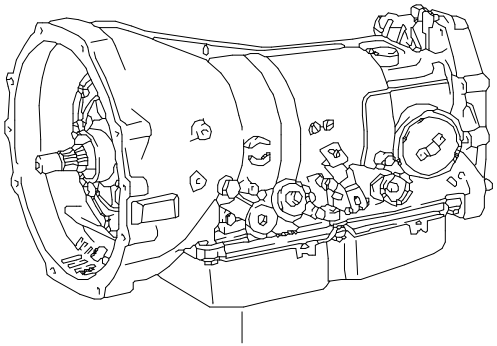

Pos	Part Number	Name	Remarks	Qty	Model
		automatic transmission 4th speed replacement transmission			A28.01/02/03 A28.04/05/06 A28.07/08/09 A28.11
1	E 960 300 004 04	automatic transmission 4-speed	85	1	A28.04
(1)	E 960 300 004 07	automatic transmission 4-speed	86	1	A28.07 (J)
1	E 960 300 004 01	automatic transmission 4-speed	-84	1	A28.01 (J)
1	E 960 300 004 02	automatic transmission 4-speed	84	1	A28.02
1	E 960 300 004 05	automatic transmission 4-speed	85	1	A28.05
(1)	E 960 300 004 08	automatic transmission 4-speed	86	1	A28.08
(1)	E 960 300 004 09	automatic transmission 4-speed	86	1	A28.09 (CH)(S) M 251
(1)	> 960 300 004 11	automatic transmission 4-speed	86 86	1	A28.11 (AUS) M 299
1	E 960 300 004 03	automatic transmission 4-speed	84	1	A28.03
1	E 960 300 004 06	automatic transmission 4-speed	85	1	A28.06
1	E 960 300 014 04	automatic transmission 4-speed limit.-slip different. 40%	85	1	A28.04
(1)	E 960 300 014 07	automatic transmission 4-speed limit.-slip different. 40%	86	1	A28.07 (J)

Pos	Part Number	Name	Remarks	Qty	Model
1	E 960 300 014 01	automatic transmission 4-speed limit.-slip different. 40%	-84	1	A28.01 (J)
1	A 960 300 014 02	automatic transmission 4-speed limit.-slip different. 40%	84	1	A28.02
1	E 960 300 014 05	automatic transmission 4-speed limit.-slip different. 40%	85	1	A28.05
(1)	E 960 300 014 08	automatic transmission 4-speed limit.-slip different. 40%	86	1	A28.08
1	A 960 300 014 03	automatic transmission 4-speed limit.-slip different. 40%	84	1	A28.03
1	E 960 300 014 06	automatic transmission 4-speed limit.-slip different. 40%	85	1	A28.06
(1)	E 960 300 014 09	automatic transmission 4-speed limit.-slip different. 40%	86	1	A28.09 (CH)(S) M 251
(1)	E 960 300 014 11	automatic transmission 4-speed limit.-slip different. 40%	86 86	1	A28.11 M 299 (AUS)
2	> 722 270 170 1	short transmission without converter and differential	85	1	A28.04
2	> 722 270 120 1	short transmission without converter and differential	-84	1	A28.01 (J)
(2)	> 722 270 250 1	short transmission without converter and differential	86	1	A28.07 (J)
2	> 722 270 140 1	short transmission without converter and differential	84	1	A28.02/03
2	> 722 270 180 1	short transmission without converter and differential	85	1	A28.05/06
(2)	E 722 270 260 1	short transmission without converter and differential	86	1	A28.08/09
(2)	> 722 270 250 1	short transmission without converter and differential	86 86	1	A28.11 (AUS) M 299
		- -- E N D -- -			

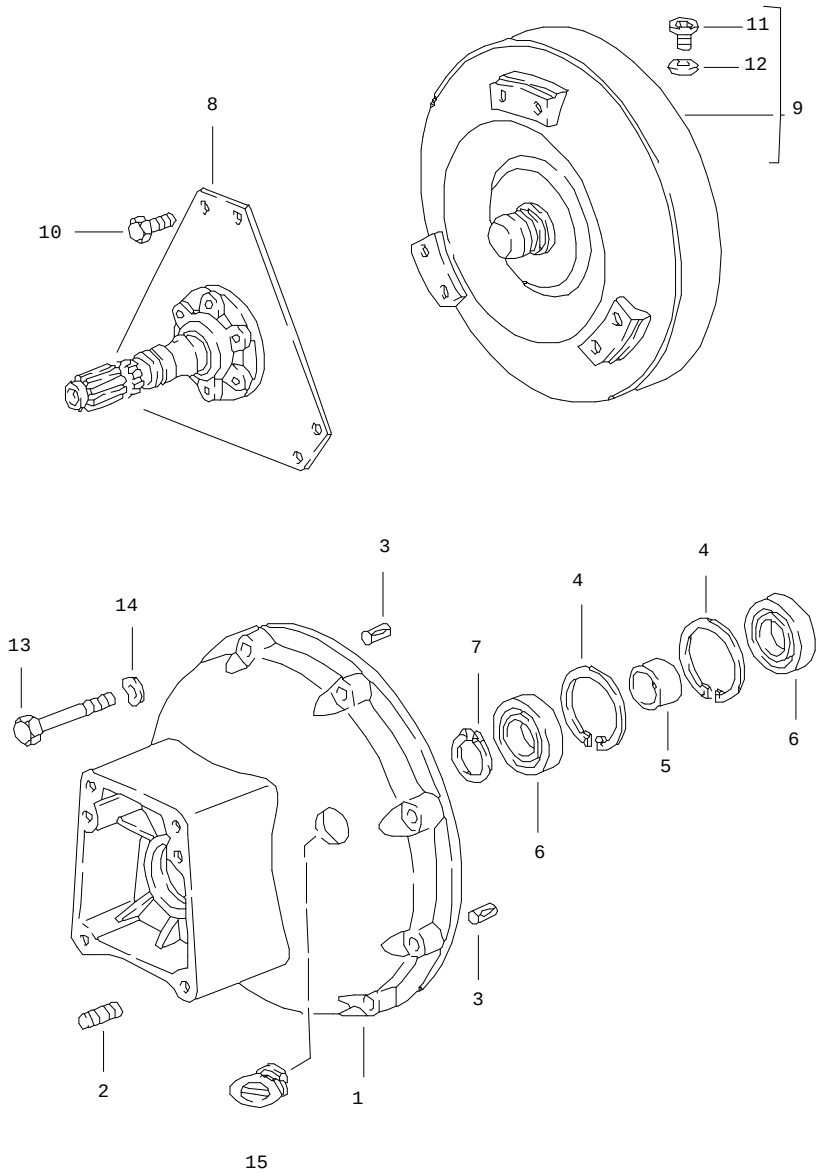

Pos	Part Number	Name	Remarks	Qty	Model
		automatic transmission 4th speed torque converter converter housing			A28.01/02/03 A28.04/05/06 A28.07/08/09 A28.11
1	960 321 101 02	converter housing		1	
2	999 062 004 02	stud BM 8 X 12		2	
3	900 185 011 02	grooved pin		2	
4	N 012 292 1	circlip 68 X 2,5		2	
5	922 421 260 00	spacer sleeve		1	
6	900 052 122 00	deep-groove ball bearing		2	
7	N 012 380 1	circlip 40 X 1,75		1	
8	960 116 042 00	drive plate		1	
9	722 250 050 2	torque converter A >> 547 628		1	A28.02/03/05 A28.06/07/08 A28.09 A28.01/04
9	722 250 020 2	torque converter A 547 629 >>		1	A28.07/11 A28.01/04
10	003 323 699 A	hexagon-head bolt		6	
11	900 219 010 02	screw plug		1	
12	900 123 033 20	sealing ring		1	
13	900 067 214 02	pan-head screw M 8 X 35		8	
14	900 025 007 02	washer A 8,4		8	
		- -- E N D -- -			

Model	Year	MG	SG	Illustration	Restrictions	Update				
928	86	3	08	308-15		179	14:29	01.09.2004	PORSCHE	PET	PORSCHE

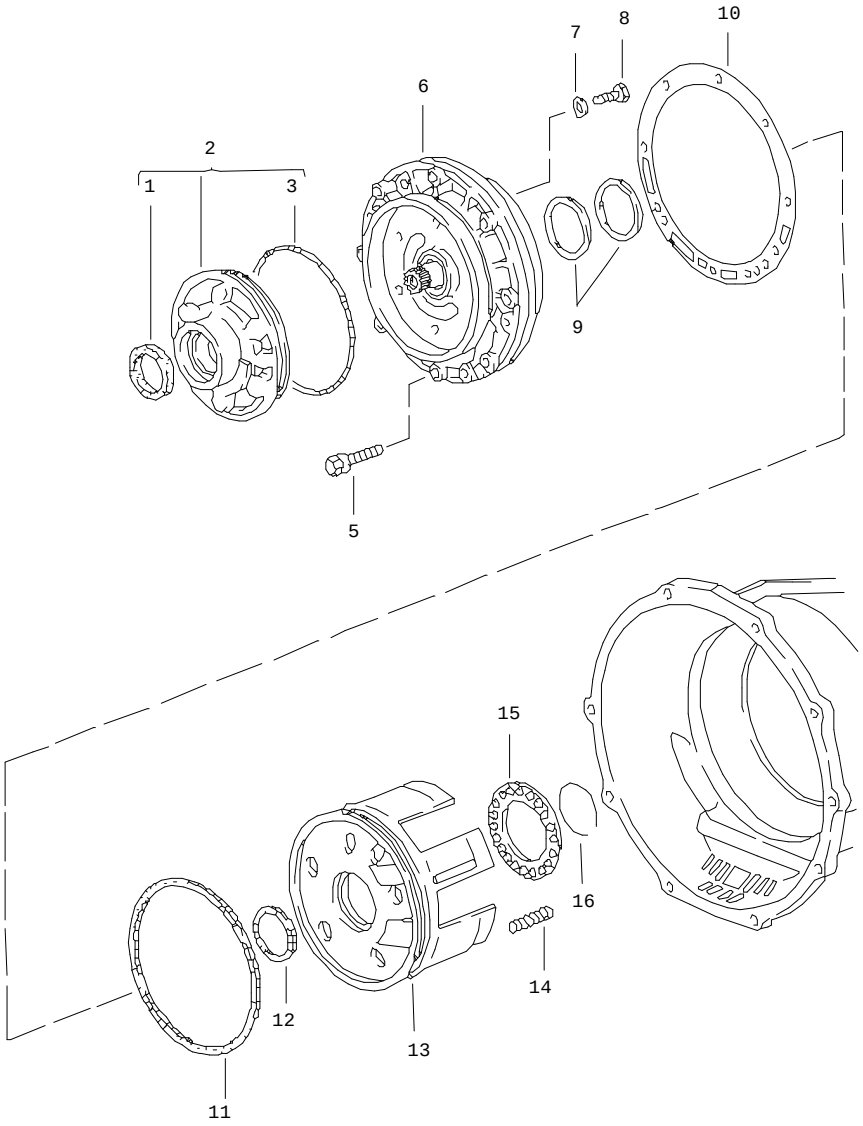

Pos	Part Number	Name	Remarks	Qty	Model
		automatic transmission 4th speed oil pump			A28.01/02/03 A28.04/05/06 A28.07/08/09 A28.11
1	018 997 044 7	sealing ring		1	
2	722 270 009 7	oil pump		1	
3	016 997 144 8	sealing ring		1	
5	960 307 915 00	screw M 8 X 40		9	
6	722 270 050 5	cover		1	
7	N 012 241 8	spring washer B 8		6	
8	N 040 222 2	hexagon-head bolt M 8 X 32		6	
9	126 272 095 5	sealing ring		2	
10	126 271 128 0	gasket		1	
11	126 272 019 2	boot		1	
12	126 272 009 2	boot		1	
13	126 272 093 1	piston		1	
14	100 993 040 2	spring		20	
15	126 272 036 4	concave washer		1	
16	126 994 043 5	snap ring		1	
		- -- E N D -- -			

Model	Year	MG	SG	Illustration	Restrictions	Update				
928	86	3	08	308-20		179	14:29	01.09.2004	PORSCHE	PET	PORSCHE

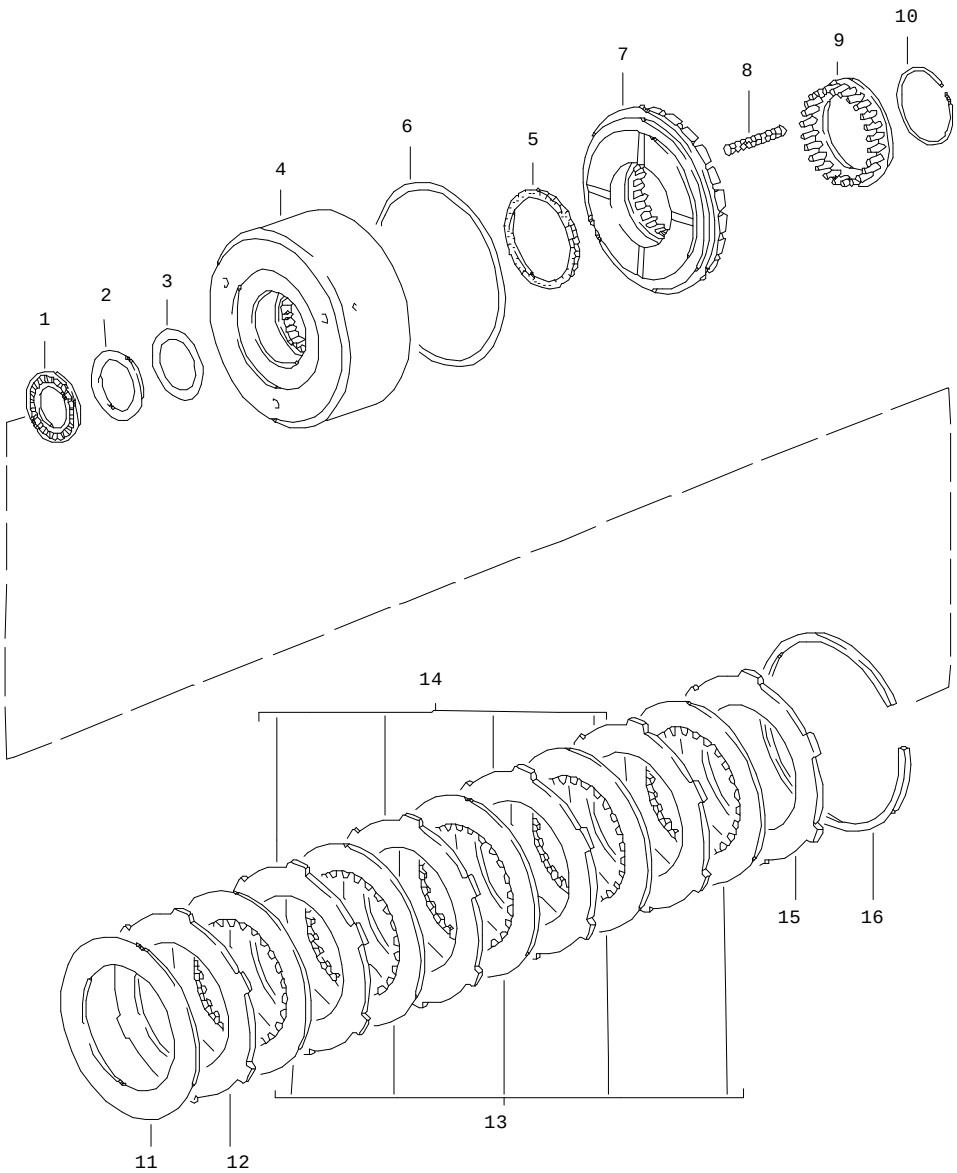

Pos	Part Number	Name	Remarks	Qty	Model
		automatic transmission 4th speed clutch K 1			A28.01/02/03 A28.04/05/06 A28.07/08/09 A28.11
1	007 981 681 0	needle-roller bearing		1	
2	000 272 256 2	thrust washer		1	
3	126 272 055 2	spacer 0,1 MM		X	
(3)	126 272 065 2	spacer 0,2 MM		X	
(3)	126 272 075 2	spacer 0,5 MM		X	
4	126 270 762 8	disc carrier K 1		1	
5	126 272 039 2	boot inner		1	
6	109 272 099 2	boot outer		1	
7	126 272 113 1	piston K 1		1	
8	126 993 700 2	spring		24	
9	126 272 106 4	concave washer		1	
10	126 994 063 5	snap ring		1	
11	126 993 102 6	cup spring		1	
12	126 272 492 6	disc with external splines 2,0 MM		1 1	
13	126 272 062 5	inner disc 2,14 MM		1	
14	126 272 502 6	disc with external splines 3,5 MM		X	
(14)	126 272 512 6	disc with external splines 4,0 MM		X	
15	126 272 322 6	disc with external splines 4,5 MM		1	

Pos	Part Number	Name	Remarks	Qty	Model	Pos	Part Number	Name	Remarks	Qty	Model
16	126 994 053 4	snap ring 2,0 MM		X							
(16)	126 994 063 4	snap ring 2,5 MM		X							
(16)	126 994 073 4	snap ring 3,0 MM		X							
		- -- E N D -- -									

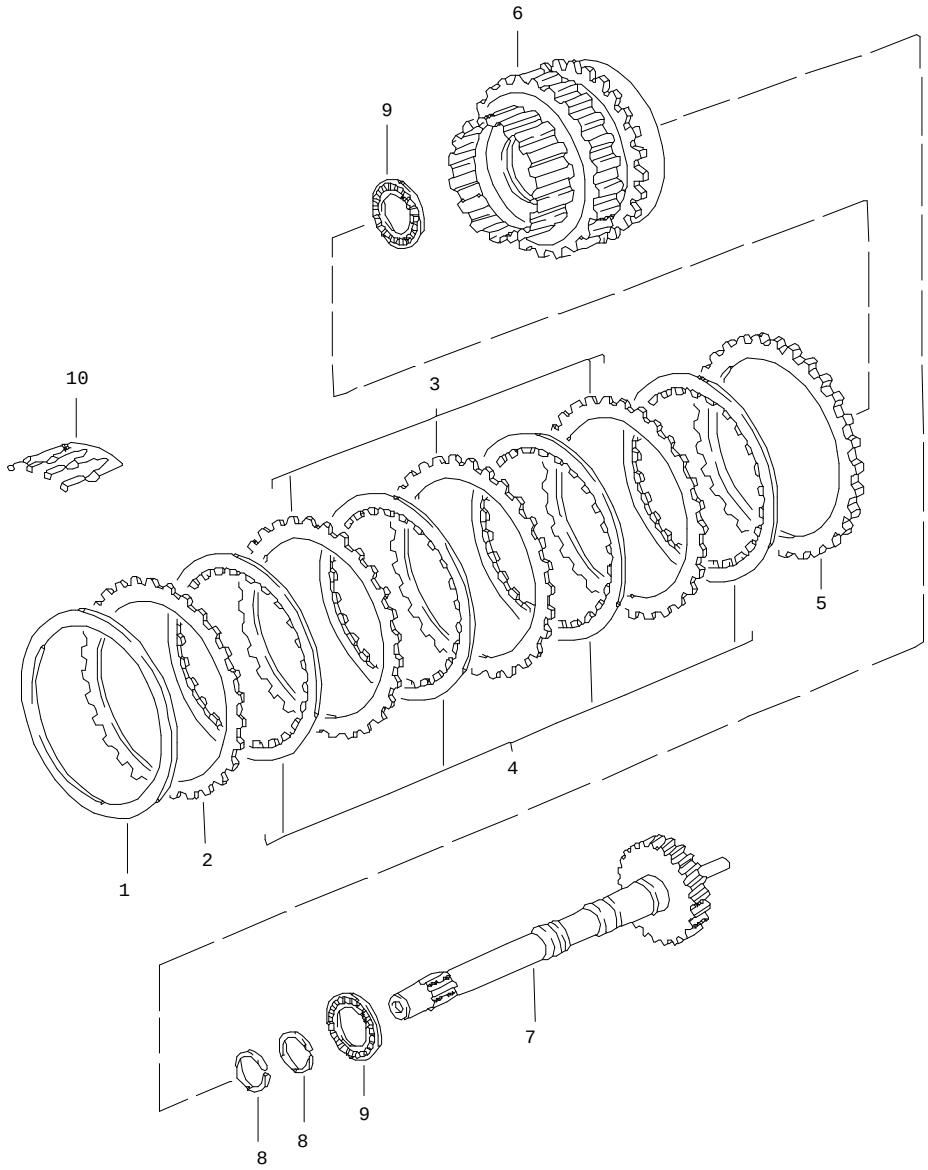

Pos	Part Number	Name	Remarks	Qty	Model
		automatic transmission 4th speed drive shaft gear set			A28.01/02/03 A28.04/05/06 A28.07/08/09 A28.11
1	126 272 095 2	spacer 2,5 MM		X	
(1)	126 272 105 2	spacer 3,0 MM		X	
(1)	126 272 115 2	spacer 3,5 MM		X	
2	126 272 682 6	disc with external splines 2,8 MM		1	
3	126 272 672 6	disc with external splines 2,3 MM		X	
(3)	126 272 682 6	disc with external splines 2,8 MM		X	
4	126 272 092 5	inner disc 2,1 MM		4	
5	126 272 692 6	disc with external splines 7,7 MM		1	
6	126 270 044 3	planet-gear carrier		1	
7	722 270 002 5	drive shaft		1	
8	126 272 005 5	sealing ring		2	
9	007 981 991 0	needle-roller bearing		2	
10	126 993 031 5	spring A >> 379 224		1	
(10)	126 993 041 5	spring A 379 225 >>		1	
		- -- E N D -- -			

Model	Year	MG	SG	Illustration	Restrictions	Update				
928	86	3	08	308-30		179	14:30	01.09.2004	PORSCHE	PET	PORSCHE

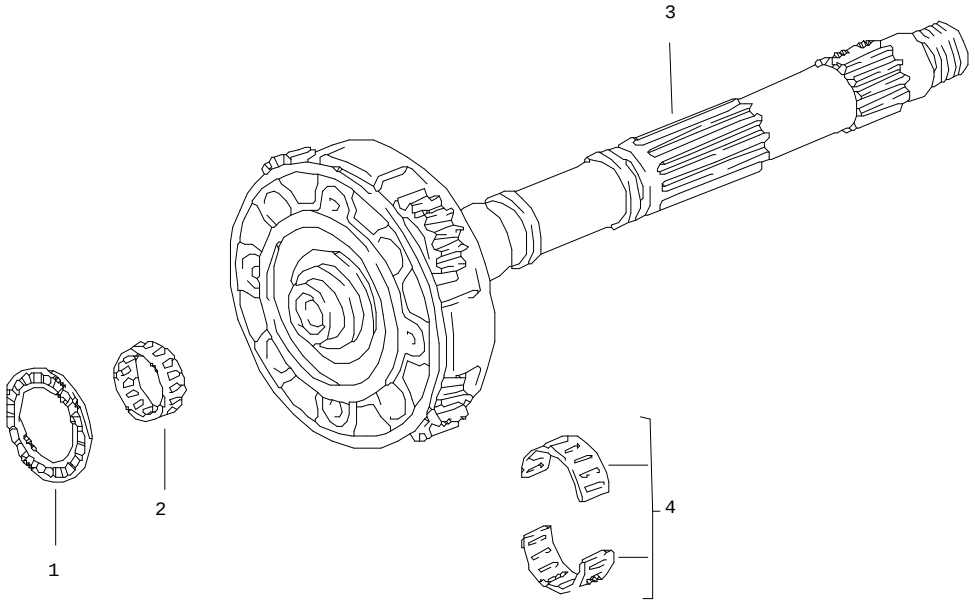

Pos	Part Number	Name	Remarks	Qty	Model
		automatic transmission 4th speed planet-gear carrier			A28.01/02/03 A28.04/05/06 A28.07/08/09 A28.11
1	007 981 571 0	needle-roller bearing		1	
2	008 981 001 0	needle-roller bearing		1	
3	722 270 144 3	planet-gear carrier		1	
4	011 981 821 0	needle-roller bearing		1	
		- -- E N D -- -			

Model	Year	MG	SG	Illustration	Restrictions	Update				
928	86	3	08	308-35		179	14:30	01.09.2004	PORSCHE	PET	PORSCHE

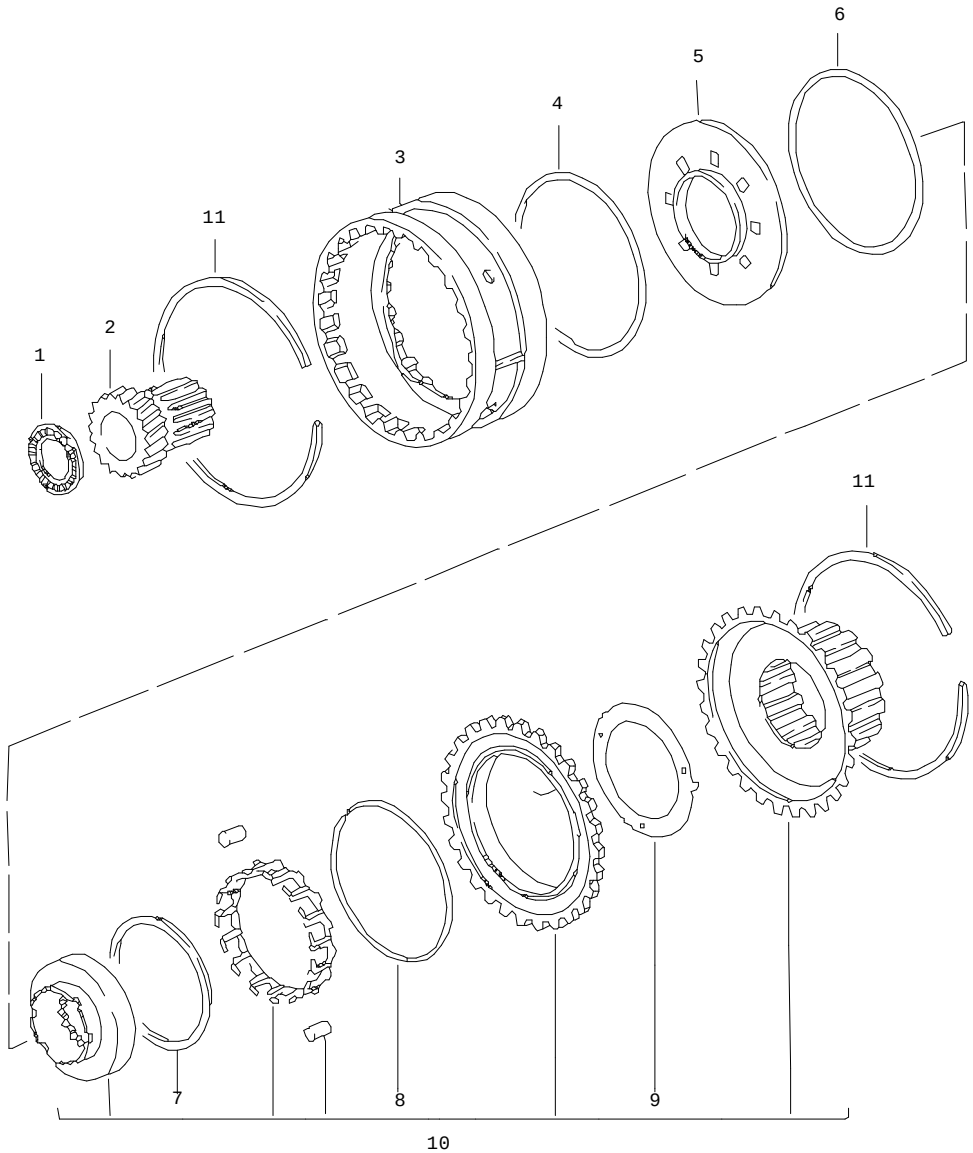

Pos	Part Number	Name	Remarks	Qty	Model
		automatic transmission 4th speed free wheel lock			A28.01/02/03 A28.04/05/06 A28.07/08/09 A28.11
1	007 981 571 0	needle-roller bearing		1	
2	126 272 000 7	sun gear		1	
3	126 272 100 8	driver		1	
4	126 272 175 2	shim 0,1 MM		X	
(4)	126 272 185 2	shim 0,2 MM		X	
(4)	126 272 195 2	shim 0,5 MM		X	
5	126 270 007 6	washer		1	
6	009 997 604 8	sealing ring		1	
7	126 272 176 2	thrust washer		1	
8	000 997 614 8	sealing ring		1	
9	126 272 306 2	thrust washer		1	
10	126 270 503 1	free wheel lock		1	
11	126 272 017 3	circlip		2	
		- -- E N D -- -			

Model	Year	MG	SG	Illustration	Restrictions	Update				
928	86	3	08	308-40		179	14:31	01.09.2004	PORSCHE	PET	PORSCHE

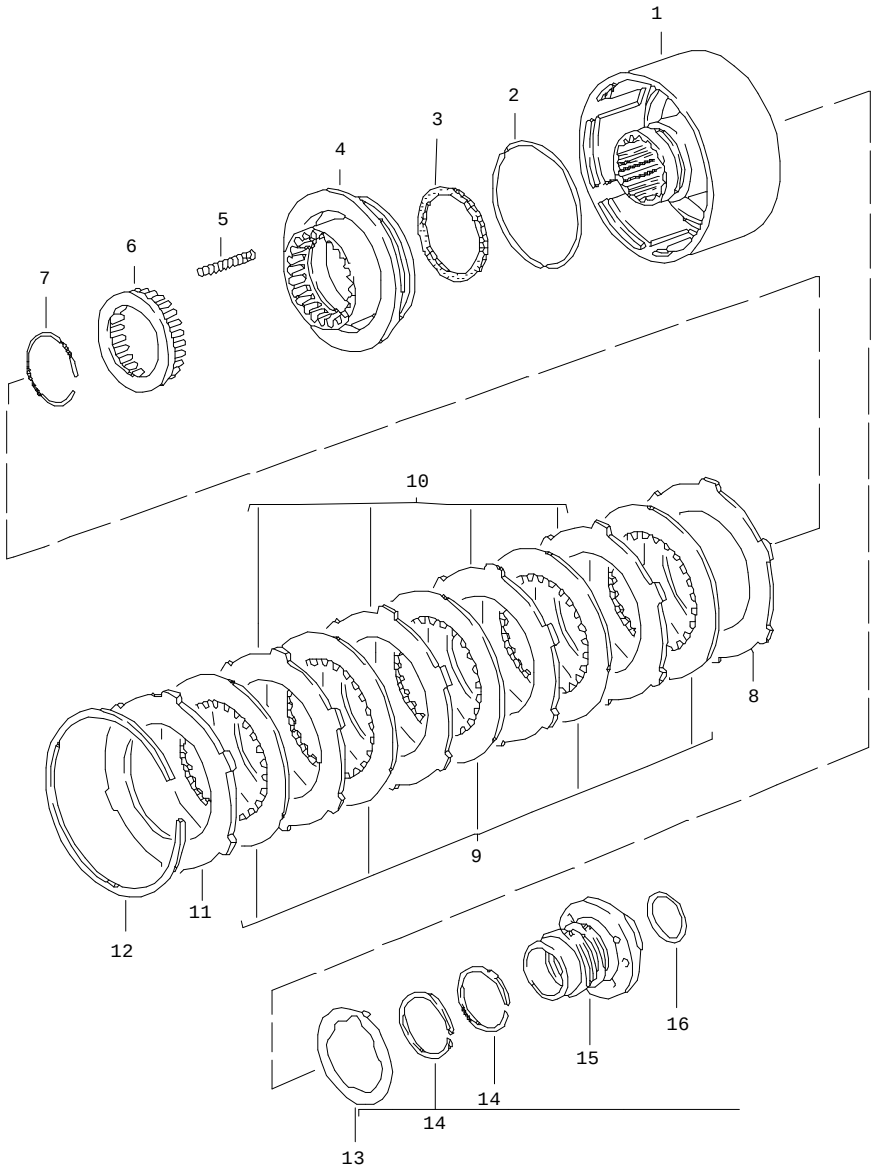

Pos	Part Number	Name	Remarks	Qty	Model
		automatic transmission 4th speed clutch K 2			A28.01/02/03 A28.04/05/06 A28.07/08/09 A28.11
1	126 270 892 8	disc carrier		1	
2	126 272 025 5	sealing ring		1	
3	126 272 039 2	boot		1	
4	126 272 123 1	piston		1	
5	126 993 070 3	spring		21	
6	126 272 026 4	concave washer		1	
7	126 994 063 5	snap ring		1	
8	126 272 472 6	disc with external splines 2,0 MM		1	
9	126 272 072 5	inner disc 2,14 MM		5	
10	126 272 362 6	disc with external splines 3,0 MM		X	
(10)	126 272 482 6	disc with external splines 3,5 MM		X	
(11)	126 272 342 6	disc with external splines 4,5 MM		X	
12	126 272 027 3	circlip 2,0 MM		X	
(12)	126 994 033 4	circlip 2,5 MM		X	
(12)	126 994 043 4	circlip 3,0 MM		X	
13	126 272 226 2	thrust washer		1	
14	126 272 095 5	sealing ring		2	
15	722 272 014 5	flange		1	
16	006 997 754 8	sealing ring		1	
		- -- E N D -- -			

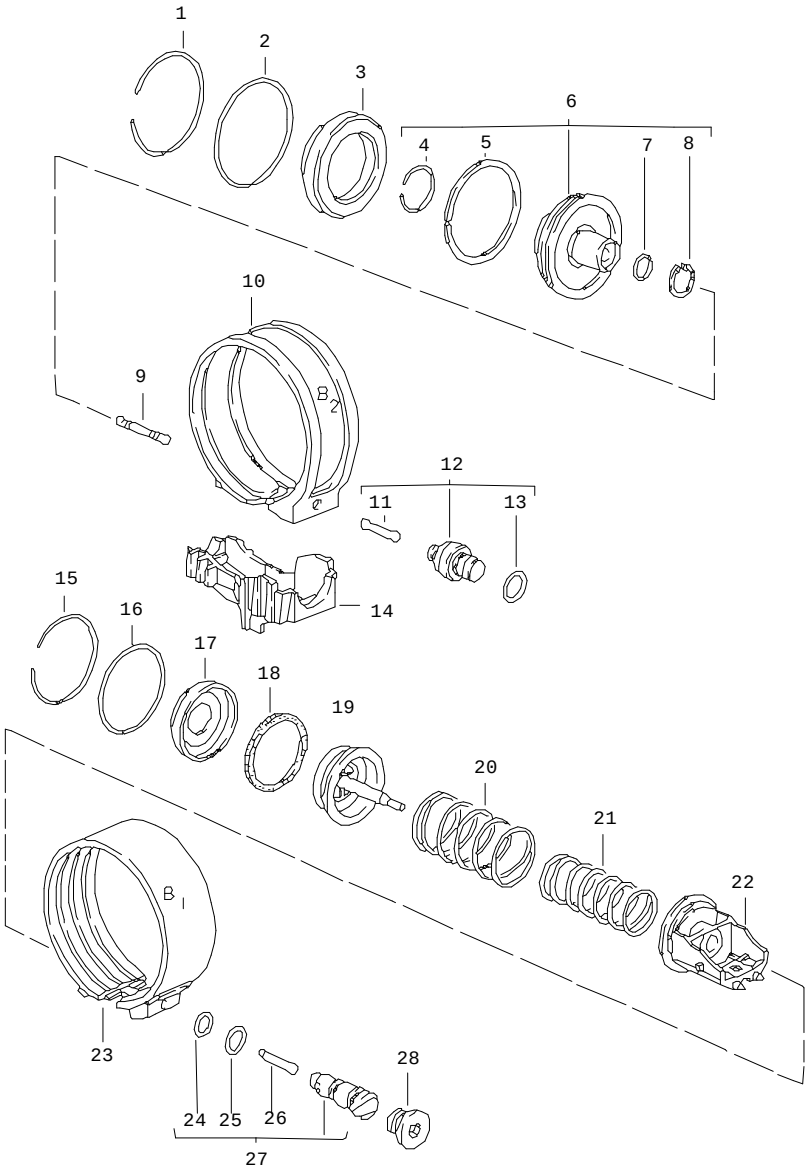

Pos	Part Number	Name	Remarks	Qty	Model
		automatic transmission 4th speed brake bands			A28.01/02/03 A28.04/05/06 A28.07/08/09 A28.11
1	126 994 013 5	snap ring		1	
2	005 997 704 8	sealing ring		1	
3	126 277 090 3	cover		1	
4	900 906 037 00	snap ring A 42		1	
5	126 277 075 5	sealing ring A >> 767 604		1	
5	126 277 245 5	sealing ring A 767 605 >>		1	
6	126 270 203 2	piston		1	
7	126 277 095 5	sealing ring		1	
8	900 042 005 01	circlip 25 X 1,2		1	
9	126 277 717 5	pin 47,2 MM		X	
(9)	126 277 727 5	pin 48,0 MM		X	
(9)	126 277 737 5	pin 48,8 MM		X	
(9)	126 277 747 5	pin 49,6 MM		X	
10	A 126 270 206 2	brake band		1	
10	126 270 206 2	brake band without asbestos		1	
11	126 277 007 5	pin A >> 383 607		1	
(11)	126 277 517 5	pin A 383 608 >>		1	
12	126 270 028 9	valve A >> 383 607		1	

Pos	Part Number	Name	Remarks	Qty	Model
(12)	126 270 208 9	valve A 383 608 >>		1	
13	005 997 814 8	sealing ring		1	
14	126 277 094 0	support		1	
15	126 994 083 5	snap ring		1	
16	005 997 864 8	sealing ring		1	
17	126 277 020 3	cover		1	
18	115 272 109 2	boot		1	
19	126 270 453 2	piston 68 MM		1	
(19)	126 270 473 2	piston 69 MM		1	
(19)	126 270 493 2	piston 70 MM		1	
(19)	126 270 513 2	piston 71 MM		1	
(19)	126 270 533 2	piston 72 MM		1	
(19)	126 270 553 2	piston 73 MM		1	
(19)	126 270 573 2	piston 74 MM		1	
20	126 993 010 1	spring 95,3 MM		1	
21	126 993 570 1	spring 111,6 MM		1	
22	126 277 574 0	support		1	
23	126 270 186 2	brake band		1	
24	005 997 804 8	sealing ring		1	
25	010 997 084 5	sealing ring		1	
26	126 277 097 5	pin		1	
27	123 270 018 9	valve		1	
28	E 126 997 023 0	screw		1	

- -- E N D -- -

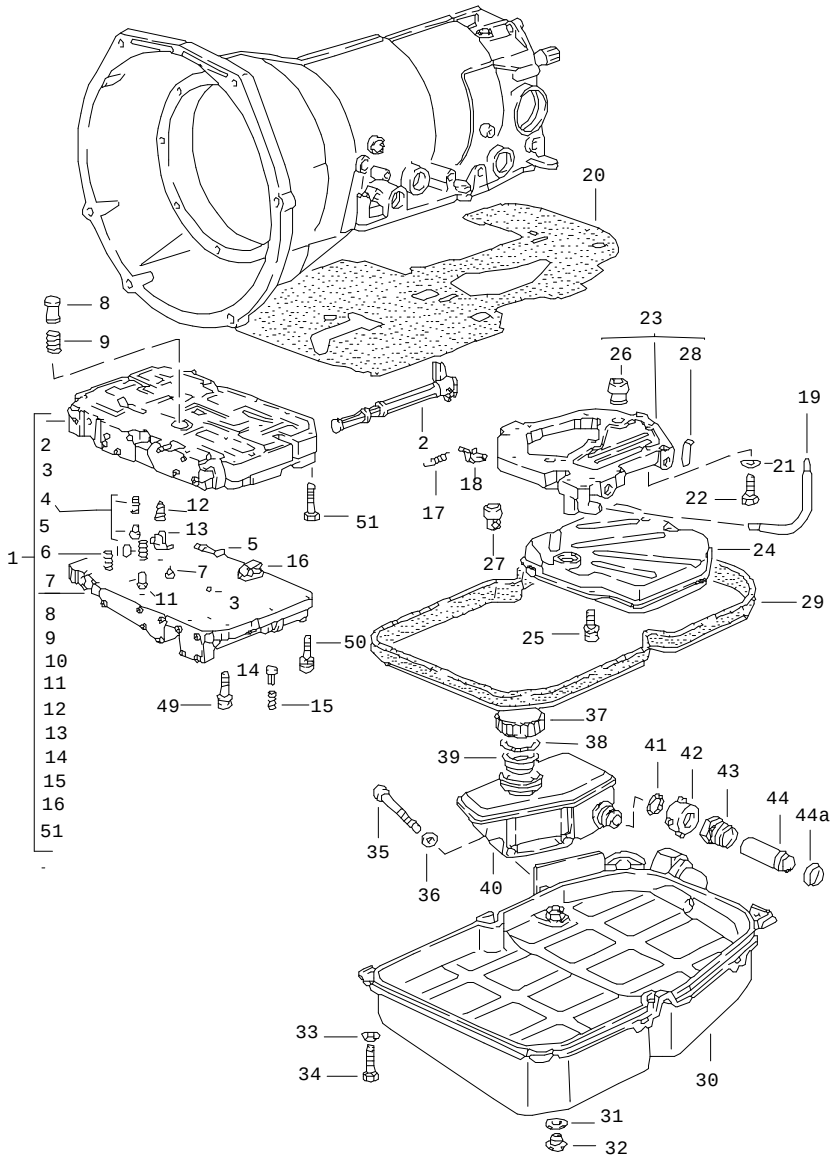

Pos	Part Number	Name	Remarks	Qty	Model
		automatic transmission 4th speed hydraulic control unit			A28.01/02/03 A28.04/05/06 A28.07/08/09 A28.11
1	> 722 270 200 7	valve body A >> 547 628		1	A28.01/04
1	722 270 250 7	valve body together with temperature restrictor 126 270 105 0 A 547 629 >> 696 928		1	A28.04/07
1	722 270 250 7	valve body A 696 929 >>		1	A28.07/08 A28.09/11
1	722 270 250 7	valve body		1	A28.02/03 A28.05/06
2	126 270 057 0	regulating valve		1	
3	116 991 002 9	ball		18	
4	126 270 047 0	slide		1	
5	126 270 148 9	valve		1	
6	722 993 080 1	spring		1	
7	115 993 150 5	spring		1	
8	126 277 193 6	valve		1	
9	126 993 200 2	spring		1	
10	115 993 280 4	spring		1	
11	126 270 198 9	valve		1	
12	126 993 690 3	spring		1	
13	126 277 223 6	valve		1	
14	126 277 263 6	valve		1	
15	126 993 730 3	spring		1	
16	126 270 178 9	valve		1	
17	722 993 001 0	spring		1	

Pos	Part Number	Name	Remarks	Qty	Model
18	722 278 004 0	retaining bracket		1	A28.01
19	126 277 004 7	oil tube		1	
20	126 277 028 0	sealing ring		1	
21	N 012 226 5	spring washer B 6		9	
22	N 010 220 3	hexagon-head bolt		9	
23	722 270 030 5	cover		1	
24	126 277 029 5	oil filter		1	
25	960 307 911 00	screw M 5 X 12		3	
26	126 270 058 9	valve		1	
27	126 270 019 8	strainer		2	
28	126 277 007 3	lock 24 MM		1	
29	126 271 028 0	gasket		1	
(30)	960 307 031 04	oil pan A >> 16E 01141		1	A28.01
30	722 270 091 2	oil pan A 16E 01142 >>		1	A28.01/04
30	722 270 091 2	oil pan		1	A28.02/03 A28.05/06
30	722 270 091 2	oil pan		1	A28.02/03 A28.05/06
(30)	722 270 111 2	oil pan	86 86	1	A28.07/08 A28.09/11
31	900 123 062 30	gasket		1	
32	960 307 912 00	screw plug		1	
33	900 025 007 02	washer A 8,4		6	
34	N 010 244 11	hexagon-head bolt M 8 X 30		6	
35	N 014 749 2	pan-head screw		2	
(35)	900 067 008 02	pan-head screw M 6 X 40	86 86	2	A28.07/08 A28.09/11
36	N 011 666 7	washer B 6,4		2	
37	477 321 481	cap		1	
(37)	960 307 481 00	threaded cover	86 86	1	A28.07/08 A28.09/11
38	477 321 483 A	gasket		1	
39	477 321 479 A	strainer		1	
(40)	960 307 475 01	container A >> 16E 01141		1	A28.01
40	960 307 475 02	container A 16E 01142 >>		1	A28.01/04
40	960 307 475 02	container		1	A28.02/03 A28.05/06
(40)	960 307 075 00	container	86 86	1	A28.07/08 A28.09/11
41	477 321 487	o-ring		X	
42	477 321 485	union nut		1	
43	011 321 387 A	cap screw		1	
(44)	960 307 407 01	filler tube A >> 16E 01141		1	A28.01
44	960 307 407 03	filler tube A 16E 01142 >>		1	A28.01/04
44	960 307 407 03	filler tube		1	A28.02/03 A28.05/06
44A	011 321 388 A	cutting ring		1	
45	960 307 041 01	support A >> 16E 01141		1	A28.01
46	N 010 208 5	hexagon-head bolt M 6 X 8 A >> 16E 01141		3	A28.01

Pos	Part Number	Name	Remarks	Qty	Model	Pos	Part Number	Name	Remarks	Qty	Model
47	N 011 666 7	washer B 6,4 A >> 16E 01141		2	A28.01						
48	999 072 005 09	hexagon-head bolt M 6 X 12 A >> 16E 01141		2	A28.01						
49	E 960 307 913 00	screw M 6 X 55		12							
50	E 960 307 914 00	screw M 6 X 50		3							
51	900 014 006 02	pan-head screw M 5 X 30 service solution hard shift jolts		2							
-	> 722 270 300 7	valve body		1							
-	126 277 961 4	intermediate plate		1							
-	126 277 108 0	gasket		1							
-	126 270 105 0	temperature restrictor		1							
-	126 270 927 9	pressure control valve		1							
		- -- E N D -- -									

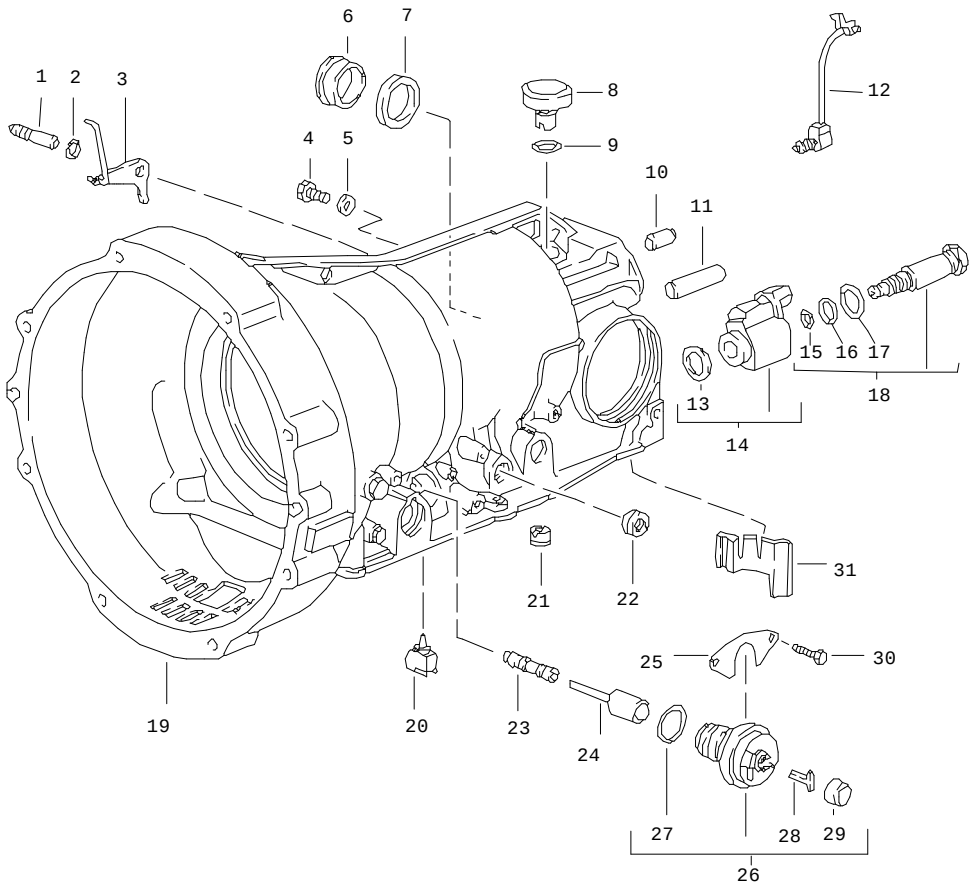

Pos	Part Number	Name	Remarks	Qty	Model
		automatic transmission 4th speed transmission case accessories			A28.01/02/03 A28.04/05/06 A28.07/08/09 A28.11
1	126 278 027 4	shaft		1	
2	005 997 744 8	sealing ring		1	
3	126 270 045 9	lever		1	
4	115 997 063 0	screw plug		3	
5	900 123 105 30	sealing ring		3	
6	126 277 035 0	bush		1	
7	006 997 734 7	sealing ring		1	
8	126 270 018 2	bleeder		1	
9	005 997 784 8	sealing ring		1	
10	E 900 012 163 00	straight pin		1	
(10)	E N 013 220 2	straight pin		2	
11	126 991 000 1	bolt		1	
12	722 270 008 4	oil splash tube		1	
13	115 304 016 0	sealing ring		1	
14	000 304 279 0	control magnet -FA.BINDER- only together with 000 304 229 0		1	
(14)	000 304 279 0	switch -FA.ELEKTROTEILE- only together with 000 304 289 0		1	
15	001 997 354 8	sealing ring		1	
16	008 997 304 8	sealing ring		1	
17	008 997 314 8	sealing ring		1	
18	000 304 289 0	control magnet -FA.BINDER- only together with 000 304 239 0		1	

Pos	Part Number	Name	Remarks	Qty	Model
(18)	000 304 289 0	control magnet -FA.ELEKTROTEILE- only together with 000 304 279 0		1	
19	722 270 091 1	housing		1	
20	126 270 055 0	temperature restrictor natural colours A >> 696 928		1	
(20)	126 270 105 0	temperature restrictor red A 696 929 >>		1	
21	126 270 058 9	valve		1	
22	006 997 014 7	sealing ring		1	
23	126 277 213 2	piston		1	
24	126 277 207 5	pin		1	
25	126 277 054 0	support		1	
26	126 270 257 9	pressure control valve A >> 547 628		1	A28.01/04
26	126 270 937 9	pressure control valve A 547 629 >>		1	A28.01/04
26	126 270 937 9	pressure control valve		1	A28.02/03 A28.05/06
27	014 997 114 8	sealing ring		1	
28	126 277 044 0	support		1	
29	126 277 008 1	cover		1	
30	900 075 355 02	screw		2	
31	126 277 008 4	shim		1	
		- -- E N D -- -			

Model	Year	MG	SG	Illustration	Restrictions	Update				
928	86	3	08	308-60		179	14:32	01.09.2004	PORSCHE	PET	PORSCHE

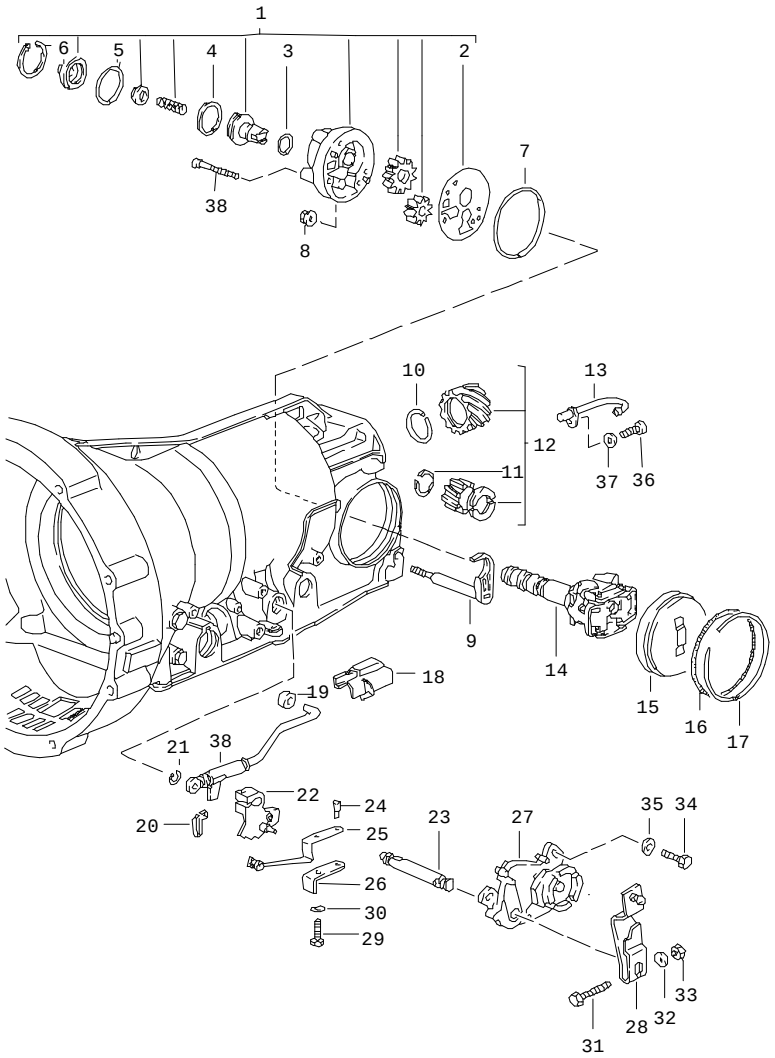

Pos	Part Number	Name	Remarks	Qty	Model
		automatic transmission 4th speed transmission case installation parts			A28.01/02/03 A28.04/05/06 A28.07/08/09 A28.11
1	126 270 029 7	secondary pump		1	
2	126 277 131 4	intermediate plate		1	
3	126 277 205 5	sealing ring		1	
4	005 997 844 8	sealing ring		1	
5	126 277 085 5	sealing ring		1	
6	900 042 045 07	circlip		1	
7	005 997 854 8	sealing ring		1	
8	960 302 902 00	nut		1	
9	126 270 005 9	lever		1	
10	722 994 023 5	snap ring		1	
11	999 152 053 01	snap ring		1	
12	126 270 044 2	gear wheel		1	
13	126 270 038 4	oil tube		1	
14	126 270 097 4	centrifugal governor		1	
15	126 270 000 8	cover		1	
16	016 997 394 8	sealing ring		1	
17	126 994 023 5	snap ring		1	
18	126 277 607 7	guide piece		1	
19	126 278 001 7	roller		1	
20	126 271 039 4	shim		1	
21	900 116 003 02	circlip		1	
22	126 270 045 7	shift segment		1	
23	126 278 021 0	shaft		1	
24	126 991 031 0	bolt		1	
25	126 270 027 8	leaf spring		1	

Pos	Part Number	Name	Remarks	Qty	Model
26	126 278 034 0	support		1	
27	000 545 490 6	switch A >> 547 628 A >> 543 394		1	 A28.01/04 A28.02/03 A28.05/06
(27)	000 545 660 6	switch A 547 629 >> A 543 395 >>		1	 A28.01/04 A28.02/03 A28.05/06
28	928 426 063 01	lever		1	
29	E 900 075 369 07	screw		1	
30	N 012 226 5	spring washer		1	
31	900 074 015 02	hexagon-head bolt		1	
32	N 011 524 7	washer		1	
33	900 076 010 02	hexagon nut		1	
34	900 075 162 02	hexagon-head bolt		2	
35	N 012 226 5	spring washer		2	
36	900 067 206 02	screw		1	
37	N 044 703 3	pan-head screw		3	
38	126 270 036 5	linkage		1	
		- -- E N D -- -			

Model	Year	MG	SG	Illustration	Restrictions	Update				
928	86	3	08	308-65		179	14:32	01.09.2004	PORSCHE	PET	PORSCHE

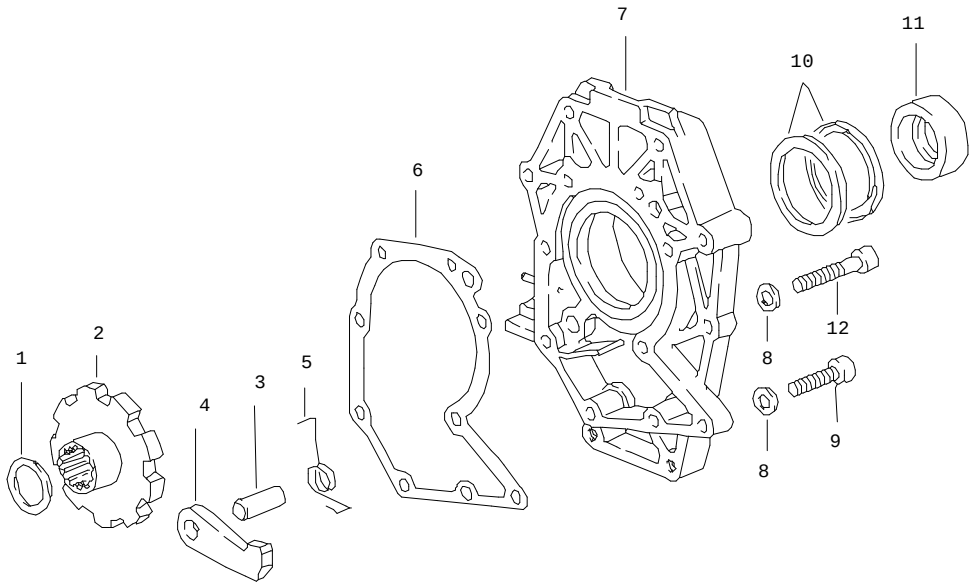

Pos	Part Number	Name	Remarks	Qty	Model
		automatic transmission 4th speed intermediate plate parking lock			A28.01/02/03 A28.04/05/06 A28.07/08/09 A28.11
1	126 272 075 2	spacer 0,5 MM		X	
2	126 272 011 7	gear wheel		1	
3	126 991 000 1	bolt		1	
4	123 278 002 1	pawl		1	
5	126 993 062 0	spring		1	
6	A 722 271 038 0	gasket		1	
6	722 271 038 0	gasket without asbestos		1	
7	960 321 031 03	intermediate plate		1	
8	722 990 034 0	washer		9	
9	E 900 067 025 02	screw		4	
10	999 113 307 40	sealing ring		2	
11	960 302 403 03	intermediate ring use also:		1	
11A	999 201 438 00	shim 30 X 55 X 0,81		1	
12	900 067 222 02	pan-head screw		5	
		- -- E N D -- -			

Model	Year	MG	SG	Illustration	Restrictions	Update	14:32	01.09.2004	PORSCHE	PET	PORSCHE
928	86	3	08	308-70		179					

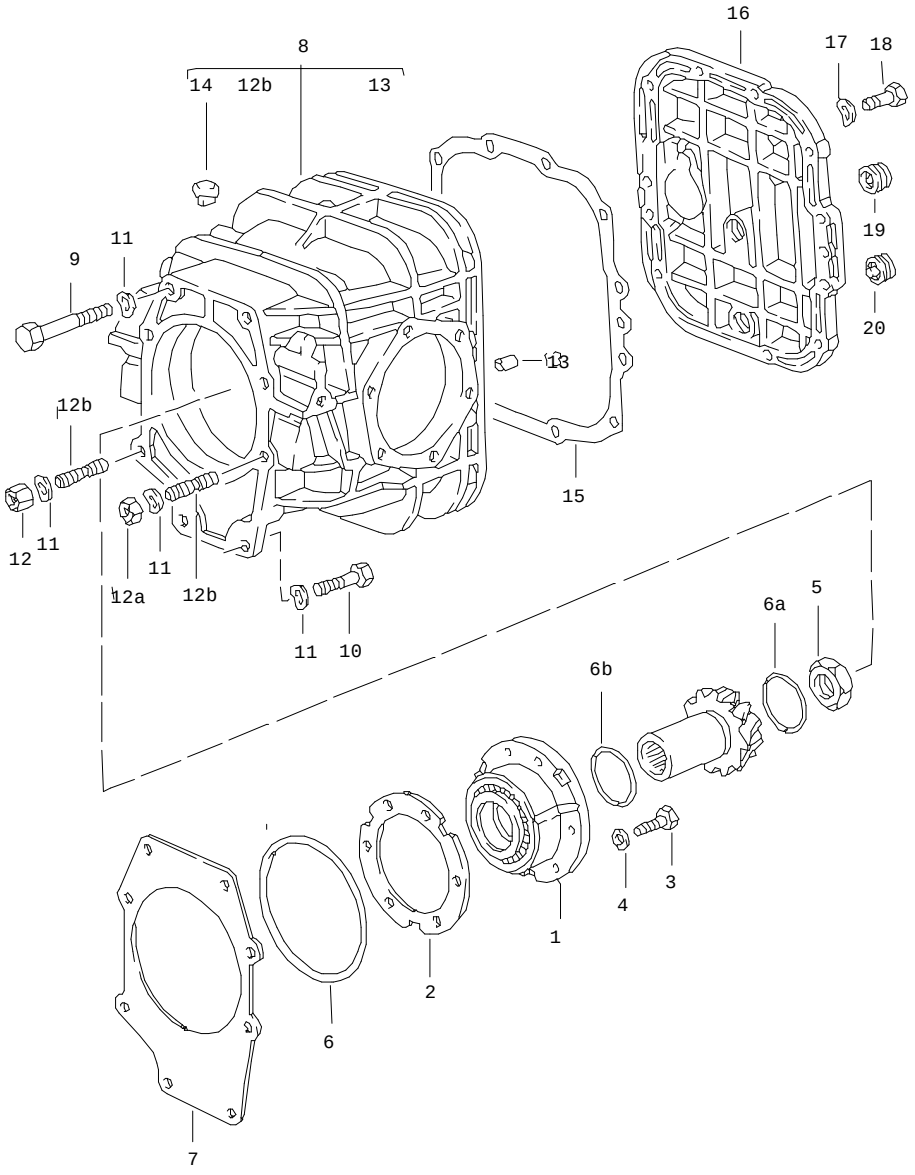

Pos	Part Number	Name	Remarks	Qty	Model
		automatic transmission 4th speed differential 1			A28.01/02/03 A28.04/05/06 A28.07/08/09 A28.11
1	960 302 063 03	bearing sleeve		1	A28.01/04
1	960 302 063 09	bearing sleeve		1	A28.02/03/05 A28.06/07/08 A28.09/11
2	960 302 299 05	adjusting shim 0,15		X	
2	960 302 299 06	adjusting shim 0,20		X	
2	960 302 299 07	adjusting shim 0,25		X	
2	960 302 299 08	adjusting shim 0,40		X	
2	960 302 299 09	adjusting shim 0,50		X	
3	N 014 726 7	pan-head screw M 8 X 30		6	
4	N 015 371 1	shake-proof washer		6	
5	922 302 282 00	collar nut		1	
6	999 701 743 40	o-ring 144,5 X 3		1	
6A	960 302 305 00	round seal		1	
6B	960 302 303 00	round seal		1	
7	960 302 297 05	adjusting shim 0,15		X	
7	960 302 297 06	adjusting shim 0,20		X	
7	960 302 297 07	adjusting shim 0,25		X	
7	960 302 297 08	adjusting shim 0,40		X	
7	960 302 297 09	adjusting shim 0,50		X	

Pos	Part Number	Name	Remarks	Qty	Model
8	960 321 041 01	rear axle housing		1	
8	960 321 041 02	rear axle housing	86	1	A28.07 (J)
8	960 321 041 02	rear axle housing	86	1	A28.08/09/11
9	900 074 063 02	hexagon-head bolt M 10 X 55		4	
10	900 075 041 09	hexagon-head bolt M 10 X 25		2	
11	900 031 005 02	washer A 10,5		8	
12	999 076 027 02	nut		1	
12A	N 011 010 6	hexagon nut M 10		1	
12B	999 062 118 02	stud BM 10 X 28		1	
12B	999 062 182 02	stud BM 10 X 25		1	
13	900 012 086 00	straight pin		2	
14	928 301 311 01	bleeder		1	
15	928 301 395 03	gasket		1	
16	928 301 305 10	cover	-85	1	
(16)	928 301 306 01	housing cover	86	1	
17	900 025 007 02	washer		12	
18	900 075 099 02	hexagon-head bolt M 8 X 30		12	
19	999 064 019 02	screw plug	-85	1	
(19)	900 219 001 30	screw plug	86	1	
20	999 064 020 02	screw plug	-85	1	
(20)	999 063 008 02	screw plug	86	1	
-	960 301 149 01	cover plate		1	A28.02
-	999 063 007 02	screw plug	86	1	
-	900 123 118 30	sealing ring	86	2	

- -- E N D -- -

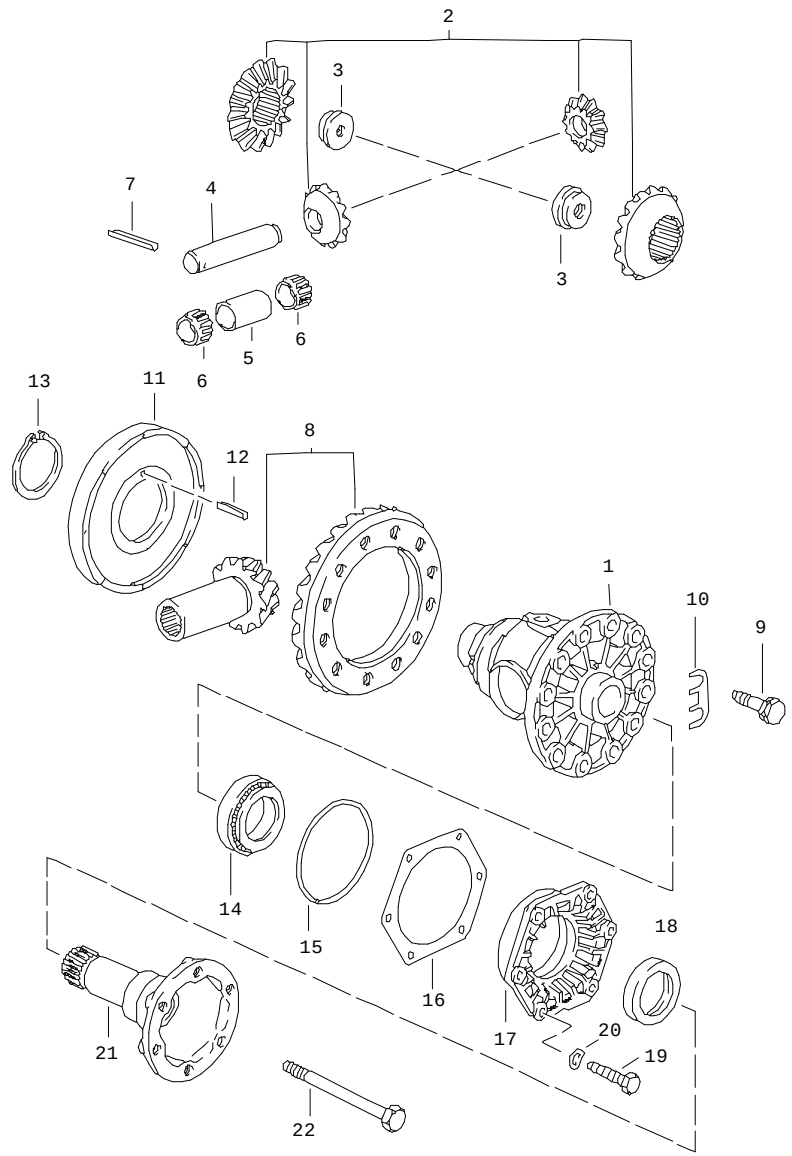

Pos	Part Number	Name	Remarks	Qty	Model
		automatic transmission 4th speed differential 2			A28.01/02/03 A28.04/05/06 A28.07/08/09 A28.11
1	928 332 212 08	differential housing		1	
2	928 332 902 02	differential pinions 1 set		1	
3	928 332 279 03	nut		2	
4	928 332 207 07	differential bolt		1	
5	928 332 205 01	spacer sleeve		1	
6	999 201 416 00	needle cage		2	
7	900 309 035 00	roll pin 5 X 40		1	
8	960 302 911 00	ring gear and pinion shaft 33 : 15		1	A28.01/04/07
8	960 302 911 04	ring gear and pinion shaft 33 : 14		1	A28.02/05/08
8	960 302 911 03	ring gear and pinion shaft 33 : 13		1	A28.03/06/09 A28.11
9	928 332 276 03	hexagon-head bolt		12	
10	928 332 285 00	tab washer		6	
11	928 318 024 02	carrier disc with magnets		1	
12	N 043 285 1	roll pin 5 X 20		1	
13	999 152 089 01	snap ring		1	
14	999 059 027 00	taper roller bearing		2	
15	928 332 217 02	o-ring		2	
16	928 332 219 00	adjusting shim 0,15		X	
16	928 332 219 01	adjusting shim 0,20		X	
16	928 332 219 02	adjusting shim 0,25		X	

Pos	Part Number	Name	Remarks	Qty	Model
16	928 332 219 03	adjusting shim 0,50		X	
16	928 332 219 04	adjusting shim 0,10		X	
17	928 332 213 02	housing		2	
18	928 332 215 02	shaft seal		2	
19	900 075 099 02	hexagon-head bolt M 8 X 30		12	
20	900 025 007 02	washer		12	
21	928 332 206 00	joint flange		2	A28.01/02/03
(21)	928 332 206 10	joint flange		2	A28.04/05/06 A28.07/08/09 A28.11
22	900 074 292 02	hexagon-head bolt M 10 X 98		2	
		- -- E N D -- -			

Pos	Part Number	Name	Remarks	Qty	Model

Model	Year	MG	SG	Illustration	Restrictions	Update	14:35	01.09.2004	PORSCHE	PET	PORSCHE
928	86	3	08	308-80		179					

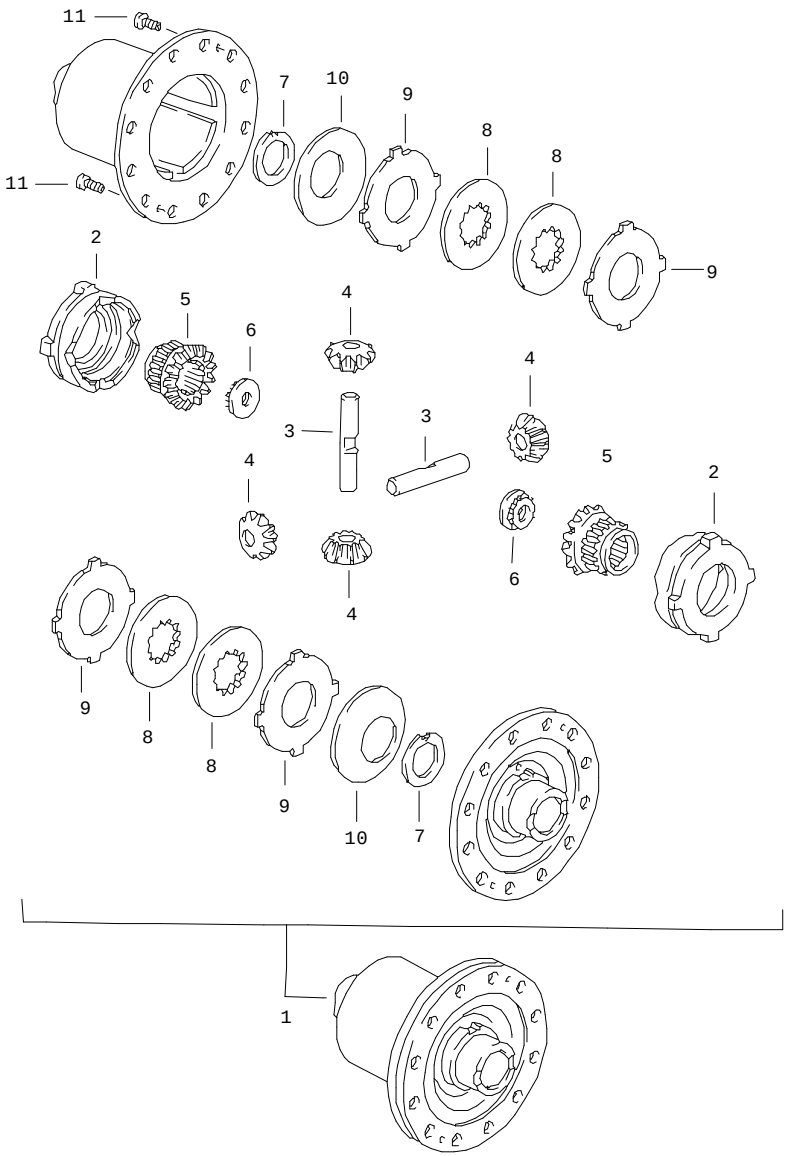

Pos	Part Number	Name	Remarks	Qty	Model
		automatic transmission 4th speed limited-slip differential			A28.01/02/03 A28.04/05/06 A28.07/08/09 A28.11
1	928 332 052 20	limit.-slip different. 40%		1	
2	928 332 511 00	thrust ring		2	
3	928 332 541 00	differential shaft		2	
4	928 332 531 00	bevel pinion		4	
5	930 332 535 01	shaft bevel gear	83	2	
(5) E	928 332 535 01	shaft bevel gear	84-	2	
6	928 332 279 01	threaded disc		2	
7	901 332 561 11	thrust washer		2	
8	928 332 551 00	inner disc 2,0 MM		2	
9	917 332 552 10	disc with external splines 1,9 MM		6	
(9)	917 332 552 11	disc with external splines 2,0 MM		X	
(9)	917 332 552 12	disc with external splines 2,1 MM		X	
10	928 332 555 00	cup spring	83	2	
(10)	928 332 555 20	cup spring	84-	2	
11	N 014 765 2	pan-head screw M 6 X 10	83	2	
(11)	900 249 023 00	countersunk-head screw M 6 X 10	84-	2	
		- -- E N D -- -			

Model	Year	MG	SG	Illustration	Restrictions	Update	14:36	01.09.2004	PORSCHE	PET	PORSCHE
928	86	3	08	308-85		179					

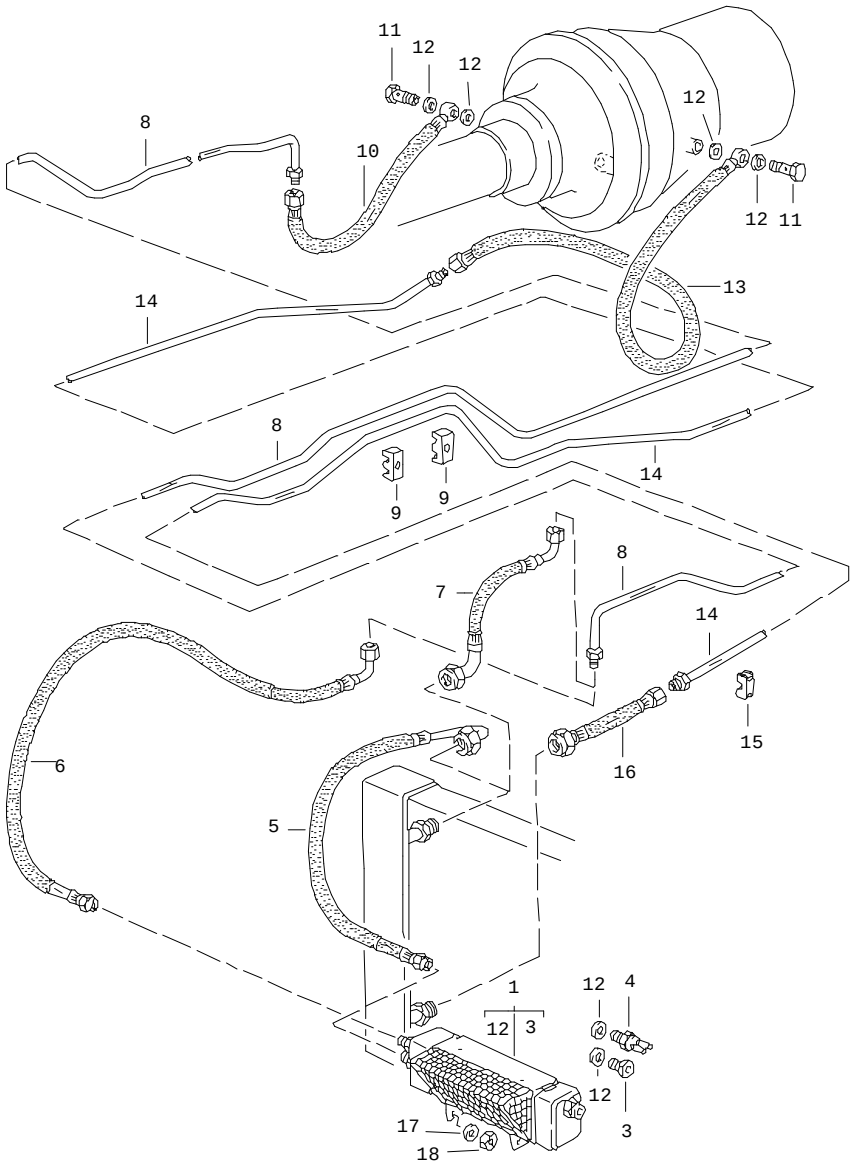

Pos	Part Number	Name	Remarks	Qty	Model
		automatic transmission 4th speed atf cooler atf lines	-85 -85		A28.01/02/03 A28.04/05/06
1	928 307 029 00	transmission oil cooler		1	A28.02/03/04 A28.05/06
3	900 219 002 02	screw plug AM 14 X 1,5		1	A28.02/03/04 A28.05/06
4	928 606 309 01	temperature switch		1	A28.02/03/04 A28.05/06 M 208
5	928 307 023 03	pressure hose intake		1	A28.02/03/04 A28.05/06
6	928 307 025 03	pressure hose return		1	A28.02/03/04 A28.05/06
7	922 307 025 00	pressure hose return 255 MM		1	A28.01
8	922 307 019 03	oil pipe return		1	A28.01/02/03 A28.04/05/06
9	922 307 114 01	clamp		10	
10	960 307 021 02	pressure hose return		1	A28.01/02/03 A28.04/05/06 06
11	999 134 028 02	banjo bolt		2	
12	900 123 007 30	sealing ring A 14 X 18		5	
13	960 307 020 01	pressure hose supply		1	A28.01/02/03 A28.04/05/06
14	922 307 018 99	oil pipe supply		1	A28.01/02/03 A28.04/05/06
15	922 307 114 02	clamp		5	

Pos	Part Number	Name	Remarks	Qty	Model
16	922 307 023 02	pressure hose supply		1	A28.01/02/03 A28.04/05/06
17	N 011 524 7	washer A 6,4		3	A28.02/03/04 A28.05/06
18	900 910 010 09	lock nut M 6		3	A28.02/03/04 A28.05/06
		- -- E N D -- -			

Pos	Part Number	Name	Remarks	Qty	Model

Model	Year	MG	SG	Illustration	Restrictions	Update				
928	86	3	08	308-86		179	14:36	01.09.2004	PORSCHE	PET	PORSCHE

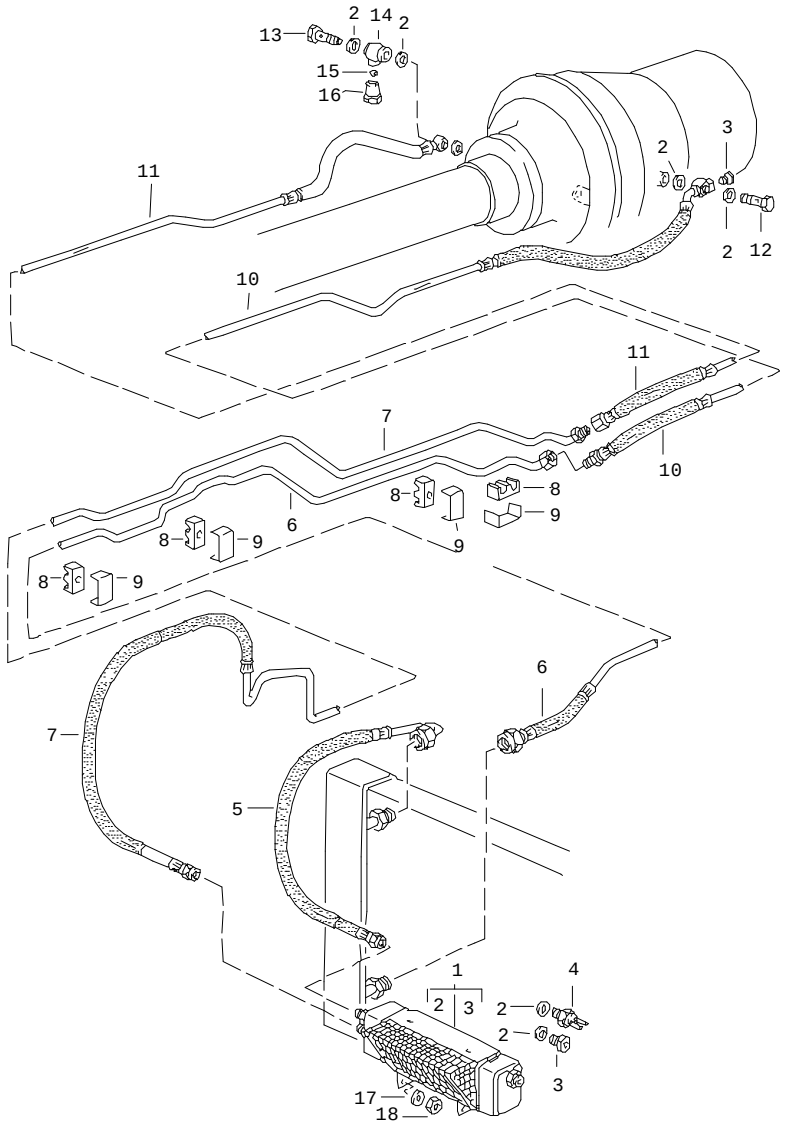

Pos	Part Number	Name	Remarks	Qty	Model
		automatic transmission 4th speed atf cooler atf lines	 86 86		A28.07/08/09 A28.11
1	928 307 029 00	transmission oil cooler		1	
2	900 123 007 30	sealing ring A 14 X 18		7	
3	900 219 002 02	screw plug AM 14 X 1,5		2	
4	928 606 309 01	temperature switch		1	M 208
5	928 307 023 03	pressure hose		1	
6	960 307 028 02	oil pipe supply		1	
7	E 960 307 029 02	oil pipe return		1	
8	928 356 525 01	rubber mounting		5	
9	928 356 555 00	clamp		5	
10	960 307 038 00	oil pipe supply		1	
11	960 307 039 00	oil pipe return		1	
12	999 134 030 02	banjo bolt M 14 X 1,5		1	
13	960 307 161 01	banjo bolt		1	
14	960 307 057 01	nipple		1	
15	N 025 657 1	ball		1	
16	960 307 163 00	screw plug		1	
		- -- E N D -- -			

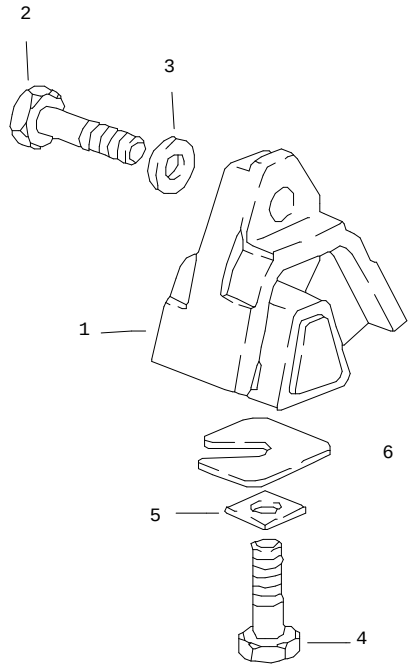

Pos	Part Number	Name	Remarks	Qty	Model
		automatic transmission 4th speed transmission suspension			A28.01/02/03 A28.04/05/06 A28.07/08/09 A28.11
1	928 375 045 16	transmission mounting		2	
2	N 010 142 2	hexagon-head bolt M 12 X 1,5 X 50		2	
3	W 901 333 143 01	washer		4	
3	999 025 091 02	washer		2	
4	N 040 108 1	hexagon-head bolt M 12 X 1,5 X 40		2	
5	928 375 331 00	square washer		2	
6	928 331 520 01	washer 1 MM		X	
6	928 331 520 02	washer 2 MM		X	
6	928 331 520 03	washer 3 MM		X	
6	928 331 520 04	washer 4 MM		X	
		- -- E N D -- -			

Model	Year	MG	SG	Illustration	Restrictions	Update	16:11	01.09.2004
928	86	3	98	REP		179		

Pos	Part Number	Name	Remarks	Qty	Model
		set of seals			
>>	> 928 300 901 01	set of seals manual transmission comprising:		1	
-	928 301 111 00	o-ring		1	
-	928 301 393 06	gasket		1	
-	928 301 393 07	gasket		1	
-	928 301 395 03	gasket		1	
-	928 302 167 03	shaft seal		1	
-	928 302 283 00	round seal		1	
-	928 303 120 01	shaft seal		1	
-	928 332 215 02	shaft seal		2	
-	928 332 217 02	o-ring		2	
-	928 303 313 00	gasket		1	
-	928 302 283 01	round seal		1	
-	999 701 904 40	o-ring		1	
-	928 116 901 00	repair kit clutch operating cylinder		1	
-	922 300 901 00	set of seals automatic transmission 3 speed without differential comprising:		1	A22.04
-	019 997 324 7	sealing ring		1	
-	900 123 116 30	sealing ring A 12 X 15,5		4	
-	115 277 338 0	gasket		1	
-	116 271 018 0	gasket		1	
-	E 002 997 214 8	sealing ring		1	
-	900 123 019 30	sealing ring A 16 X 22		1	
-	006 997 614 6	sealing ring		1	
-	010 997 774 5	o-ring 19 X 1,8		1	
-	008 997 304 8	sealing ring 12,5 X 1,5		1	

Model	Year	MG	SG	Illustration	Restrictions	Update	16:11	01.09.2004
928	86	3	98	REP		179		

Pos	Part Number	Name	Remarks	Qty	Model
-	001 997 354 8	sealing ring 6,5 X 1,5		1	
-	115 304 016 0	sealing ring		1	
-	900 123 105 30	sealing ring A 8 X 14		3	
-	002 997 574 8	sealing ring		1	
-	100 272 045 5	sealing ring		1	
-	109 272 099 2	boot		1	
-	115 272 149 2	boot		1	
-	115 272 065 5	sealing ring		4	
-	115 272 079 2	boot		1	
-	109 272 049 2	boot		1	
-	115 272 169 2	boot		1	
-	115 272 135 5	sealing ring		3	
-	922 321 301 07	sealing ring		2	
-	922 302 401 00	round seal 26,7 X 1,78		1	
-	922 302 402 01	o-ring 31 X 2		1	
-	000 997 484 8	sealing ring		1	
-	115 277 075 5	sealing ring		1	
-	115 272 119 2	boot		1	
-	010 997 084 5	sealing ring		2	
-	115 272 109 2	boot		1	
-	000 997 474 8	sealing ring		1	
-	115 272 089 2	boot		1	
-	008 997 354 5	sealing ring		1	
-	477 321 483 A	gasket		1	
-	922 321 537 00	o-ring		1	
>>	> 922 300 902 00	set of seals automatic transmission differential comprising:		1	A22.04
-	922 321 311 00	round seal		1	

Model	Year	MG	SG	Illustration	Restrictions	Update		
928	86	3	98	REP		179	16:11	01.09.2004

Pos	Part Number	Name	Remarks	Qty	Model
-	928 301 395 03	gasket		1	
-	928 332 215 02	shaft seal		2	
-	928 332 217 02	o-ring		2	
-	E 123 270 009 8	oil filter set comprising: oil filter		1 1	A22.04
-	115 271 158 0	oil sump gasket for oil sump		1	
-	900 123 007 30	sealing ring		2	
-	900 123 033 20	sealing ring		1	
>>	> 126 270 530 0	set of seals for automatic transmission 4-speed without differential comprising:		1	A28.01/02/03 A28.04/05/06 A28.07/08/09 A28.11
-	018 997 044 7	sealing ring		1	
-	016 997 144 8	sealing ring		1	
-	126 272 005 5	sealing ring		2	
-	126 272 025 5	sealing ring		1	
-	126 272 039 2	boot		2	
-	126 272 019 2	boot		1	
-	126 272 009 2	boot		1	
-	126 272 095 5	sealing ring		2	
-	126 271 128 0	gasket		1	
-	006 997 014 7	sealing ring		1	
-	006 997 734 7	sealing ring		1	
-	006 997 754 8	sealing ring		1	
-	126 272 095 5	sealing ring		2	
-	005 997 774 8	sealing ring		1	
-	005 997 814 8	sealing ring		1	
-	126 277 095 5	sealing ring		1	
-	126 277 075 5	sealing ring		1	

Model	Year	MG	SG	Illustration	Restrictions	Update	16:11	01.09.2004
928	86	3	98	REP		179		

Pos	Part Number	Name	Remarks	Qty	Model
-	005 997 704 8	sealing ring		1	
-	005 997 804 8	sealing ring		1	
-	010 997 084 5	sealing ring		1	
-	005 997 864 8	sealing ring		1	
-	900 123 105 30	sealing ring		3	
-	126 277 085 5	sealing ring		1	
-	005 997 844 8	sealing ring		1	
-	005 997 854 8	sealing ring		1	
-	126 277 028 0	sealing ring		1	
-	922 321 301 07	sealing ring		1	
-	010 997 084 5	sealing ring		1	
-	722 271 038 0	gasket		1	
-	014 997 114 8	sealing ring		1	
-	008 997 314 8	sealing ring		1	
-	008 997 304 8	sealing ring		1	
-	001 997 354 8	sealing ring		1	
-	115 304 016 0	sealing ring		1	
-	016 997 394 8	sealing ring		1	
-	126 271 028 0	oil sump gasket		1	
-	005 997 784 8	sealing ring		1	
-	960 302 901 00	set of seals		1	A28.01/02/03 A28.04/05/06 A28.07/08/09 A28.11
		differential automatic transmission comprising:			
-	999 701 743 40	o-ring		1	
-	928 301 395 03	gasket		1	
-	928 332 215 02	shaft seal		2	
-	928 332 217 02	o-ring		2	
-	960 307 901 00	oil filter set		1	A28.01/02/03 A28.04/05/06 A28.07/08/09 A28.11
		comprising:			

Model	Year	MG	SG	Illustration	Restrictions	Update		
928	86	3	98	REP		179	16:11	01.09.2004

Pos	Part Number	Name	Remarks	Qty	Model
-	126 277 029 5	oil filter		1	
-	126 271 028 0	oil sump gasket		1	
-	N 013 806 2	sealing ring		1	
-	900 123 033 20	sealing ring		1	
		- -- E N D -- -			

Model	Year	MG	SG	Illustration	Restrictions	Update				
928	86	4	01	401-00		179	14:37	01.09.2004	PORSCHE	PET	PORSCHE

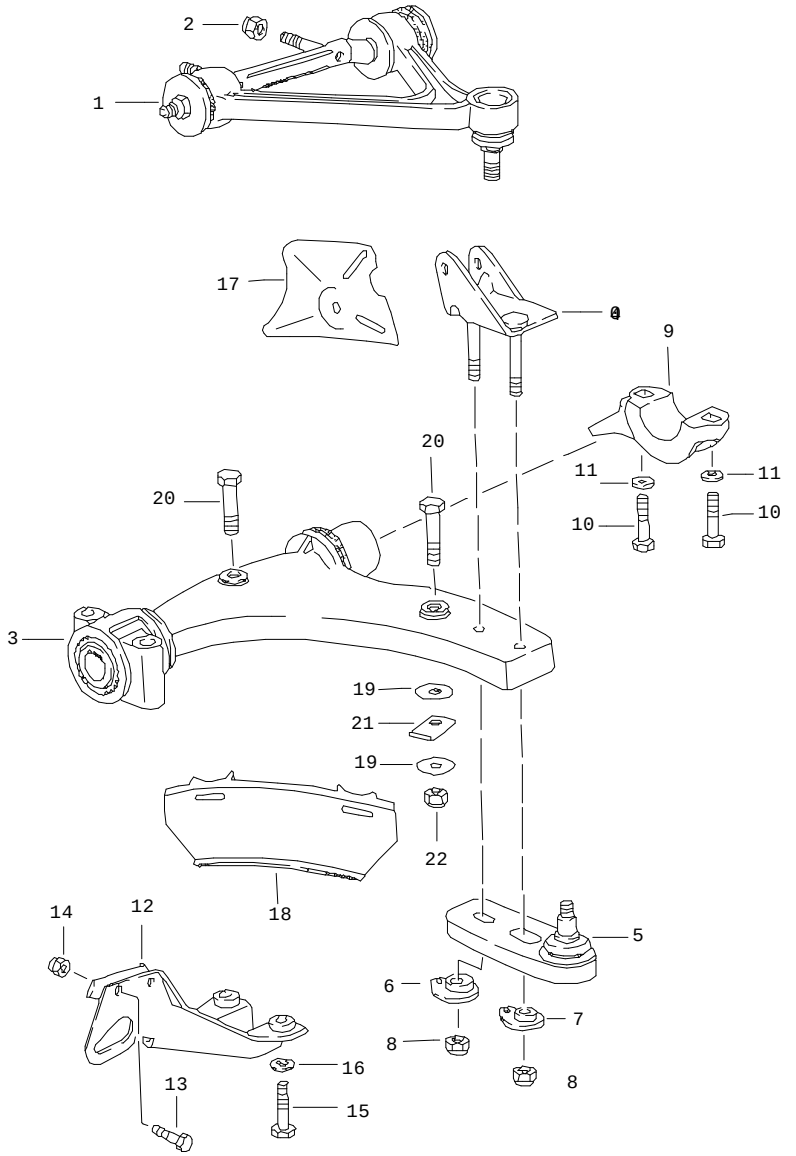

Pos	Part Number	Name	Remarks	Qty	Model
		control arm see technical information 4-NR.1	-85		
1	928 341 027 33	control arm upper	/L	1	
(1)	928 341 028 33	control arm upper	/R	1	
2	900 910 094 02	lock nut		4	
3	928 341 017 02	control arm lower		2	
4 E	928 341 091 05	clip	/L -83	1	
(4) E	928 341 091 05	clip only together with articulated carrier steel use also: 928.341.049.12 928.341.466.00	/L 84-	1	
(4)	928 341 092 05	clip	/R -83	1	
(4)	928 341 092 05	clip only together with articulated carrier steel use also: 928.341.049.12 928.341.466.00	/R 84-	1	
5 A	928 341 049 10	ball joint light alloy		2	
(5)	928 341 049 12	ball joint steel use also: 928.341.091.05 928.341.092.05 928.341.466.00		2	
6	928 341 466 00	eccentric only together with articulated carrier light alloy		2	
7	928 341 466 00	eccentric only together with articulated carrier light alloy		2	

Pos	Part Number	Name	Remarks	Qty	Model
-	928 341 466 00	eccentric only together with articulated carrier steel		4	
8	N 022 141 4	lock nut		4	
9	928 341 167 00	supporting bow		2	
10	900 082 048 08	hexagon-head bolt M 12 X 1,5 X 80		4	
11	928 341 165 00	washer		4	
12	928 341 064 02	protective bracket		2	
13	N 010 253 7	hexagon-head bolt M 10 X 22		4	
14	900 910 031 09	lock nut		4	
15	900 082 039 02	hexagon-head bolt M 12 X 1,5 X 100		4	
16	901 333 143 02	washer		4	
17	928 341 383 02	baffle plate	/L	1	
(17)	928 341 384 02	baffle plate	/R	1	
18	928 341 389 01	spoiler		2	
19	928 341 391 00	spacer		4	
20	N 010 367 4	hexagon-head bolt M 6 X 60		4	
21	928 341 395 00	fastening clip		4	
22	900 910 012 02	lock nut M 6		4	
		- -- E N D -- -			

Model	Year	MG	SG	Illustration	Restrictions	Update				
928	86	4	01	401-01		179	14:37	01.09.2004	PORSCHE	PET	PORSCHE

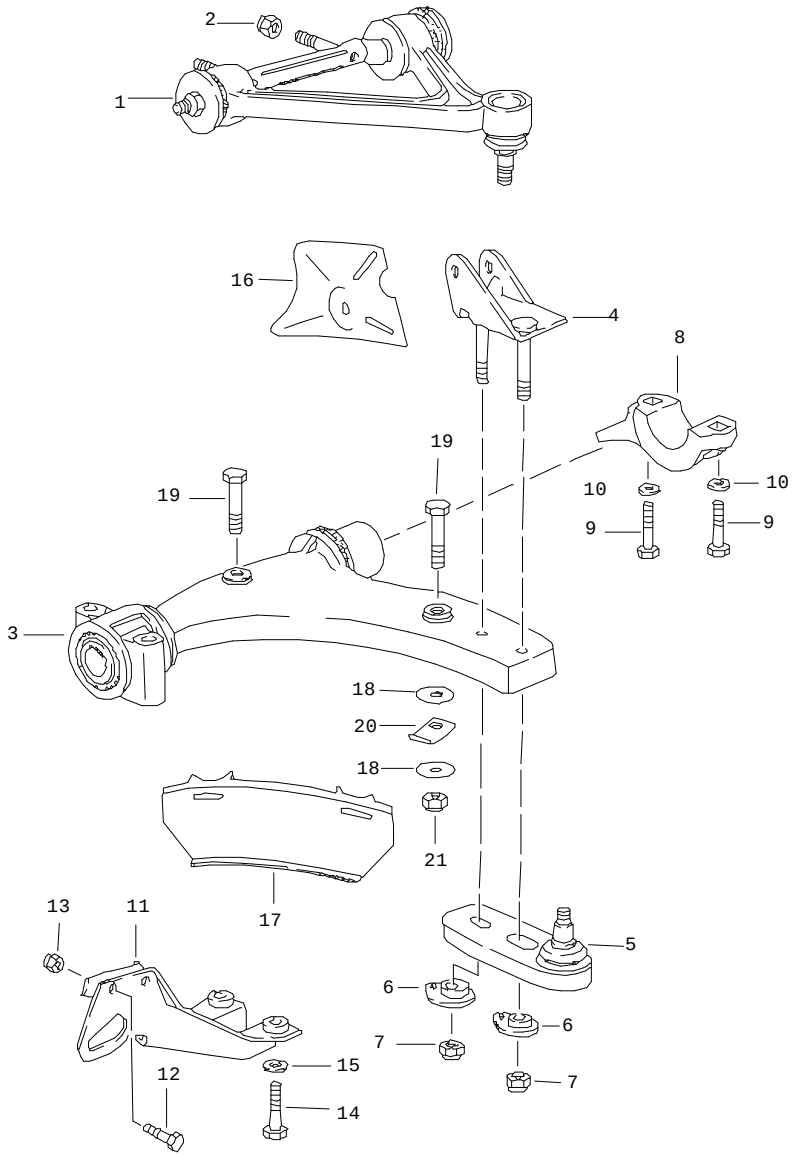

Pos	Part Number	Name	Remarks	Qty	Model
		control arm	86		
1	928 341 027 37	control arm upper	/L	1	
(1)	928 341 028 37	control arm upper	/R	1	
2	N 900 385 01	lock nut M 14 X 1,5		4	
3	928 341 017 04	control arm lower		2	
4	928 341 091 06	clip	/L	1	
(4)	928 341 092 06	clip	/R	1	
5	928 341 049 08	articulated carrier		2	
6	928 341 466 01	eccentric		4	
7	900 910 115 02	lock nut		4	
8	928 341 167 00	supporting bow		2	
9	900 082 048 08	hexagon-head bolt M 12 X 1,5 X 80		4	
10	928 341 165 00	washer		4	
11	928 341 064 02	protective bracket		2	
12	N 010 253 7	hexagon-head bolt M 10 X 22		4	
13	N 021 130 3	lock nut		4	
14	900 082 039 02	hexagon-head bolt M 12 X 1,5 X 100		4	
15	901 333 143 02	washer		4	
16	928 341 383 05	baffle plate	/L	1	
(16)	928 341 384 05	baffle plate	/R	1	
17	928 341 389 03	spoiler	/L	1	
(17)	928 341 390 03	spoiler	/R	1	
18	928 341 391 00	spacer		4	

Pos	Part Number	Name	Remarks	Qty	Model	Pos	Part Number	Name	Remarks	Qty	Model
19	N 010 367 4	hexagon-head bolt M 6 X 60		4							
20	928 341 395 01	fastening clip		4							
21	900 910 012 02	lock nut M 6		4							
		- -- E N D -- -									

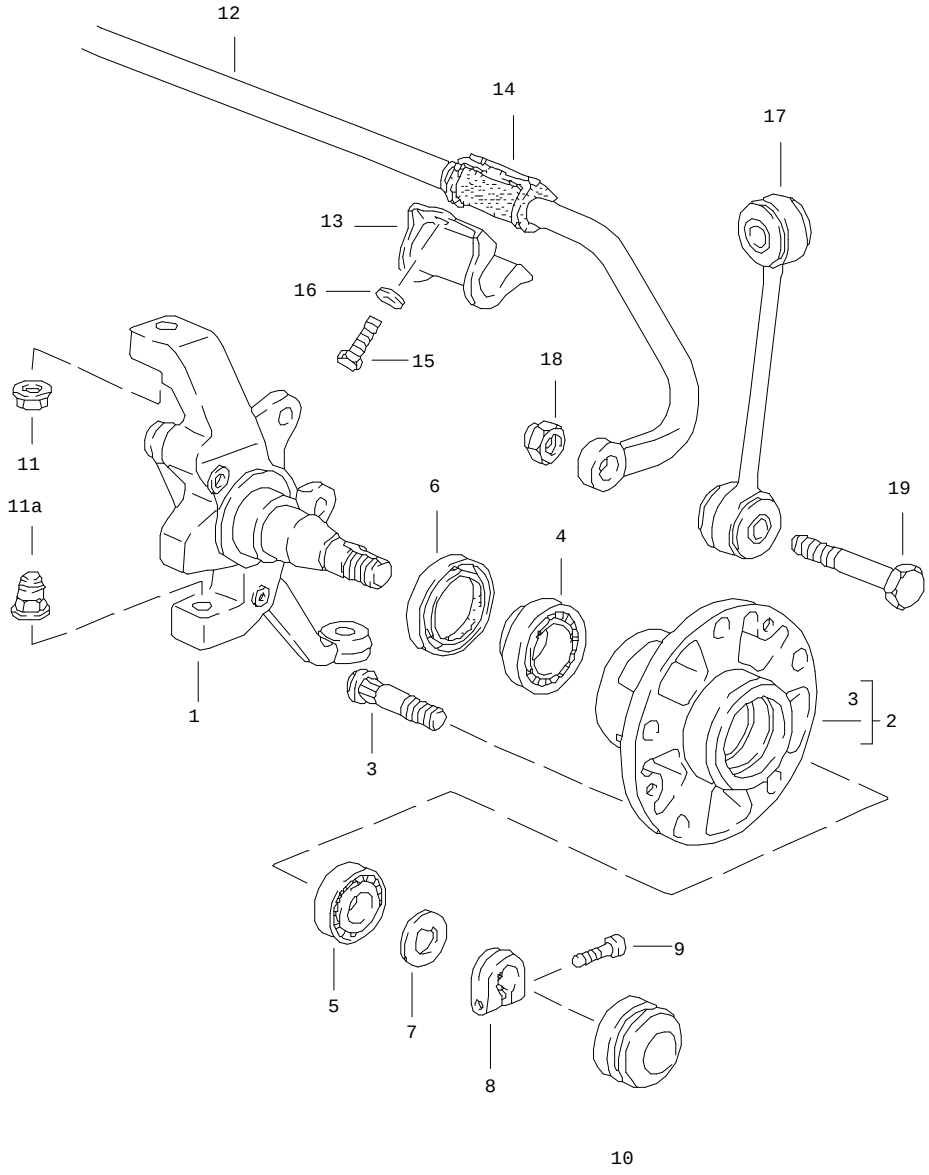

Pos	Part Number	Name	Remarks	Qty	Model
		steering knuckle stabiliser front axle	-85		
1	928 341 057 13	steering knuckle	/L 84 85	1	
(1)	928 341 057 12	steering knuckle	/L 85	1	M 593
(1)	928 341 058 13	steering knuckle	/R 84 85	1	
(1)	928 341 058 12	steering knuckle	/R -84	1	M 593
(1)	928 341 058 12	steering knuckle	/R 85	1	M 593
2	928 341 065 02	front wheel hub		2	
(2)	928 341 065 10	front wheel hub		2	M 593
3	928 341 671 02	wheel bolt		10	
(3)	928 341 671 02	wheel bolt oversize		X	
4	999 059 090 00	taper roller bearing		2	
5	999 059 067 00	taper roller bearing		2	
6	477 405 641	radial sealing ring		2	
7	911 341 663 00	thrust washer		2	
8	911 341 673 00	clamping nut		2	
9	999 119 001 01	pan-head screw M 7 X 18		2	
10	911 341 684 00	cap		2	
11	900 380 010 09	lock nut M 12 X 1,5		2	
11A	999 084 059 02	lock nut M 12 X 1,5		2	
12	928 343 073 05	stabiliser 28 MM $		1	
13	928 343 777 00	clamp		2	
14	928 343 793 04	stabiliser mounting 28 MM $		2	

Pos	Part Number	Name	Remarks	Qty	Model	Pos	Part Number	Name	Remarks	Qty	Model
15	900 075 043 02	hexagon-head bolt M 10 X 30	/RL	4							
(15)	N 010 275 3	hexagon-head bolt M 10 X 35	/LL	1							
(15)	900 075 043 02	hexagon-head bolt M 10 X 30	/LL	3							
16	900 027 016 02	lock ring B 10		4							
17	928 343 069 00	stabiliser mounting		2							
18	900 910 046 02	lock nut M 12 X 1,5		2							
19	900 082 035 02	hexagon-head bolt M 12 X 1,5 X 60		2							
		- -- E N D -- -									

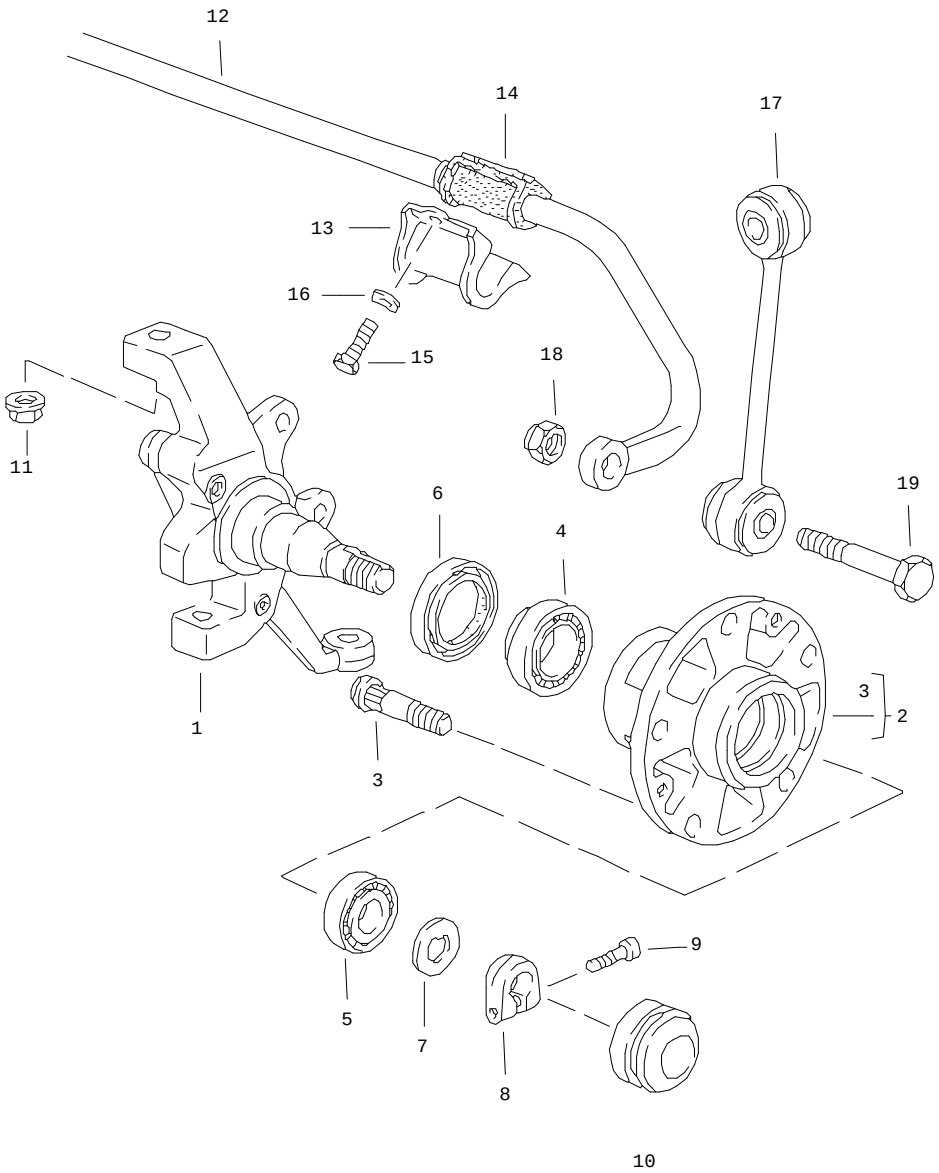

Pos	Part Number	Name	Remarks	Qty	Model
		steering knuckle	86		
1	928 341 057 14	steering knuckle	/L	1	
(1)	928 341 058 14	steering knuckle	/R	1	
2	A 928 341 066 04	front wheel hub		2	
(2)	928 341 066 04	front wheel hub		2	
3	928 341 671 02	wheel bolt		10	
(3)	928 341 671 02	wheel bolt oversize		X	
4	999 059 090 00	taper roller bearing		2	
5	999 059 089 01	taper roller bearing		2	
6	477 405 641	radial sealing ring		2	
7	911 341 663 00	thrust washer		2	
8	911 341 673 00	clamping nut		2	
9	999 119 001 01	pan-head screw M 7 X 18		2	
10	911 341 684 00	cap		2	
11	900 380 010 09	lock nut M 12 X 1,5		4	
12	928 343 073 06	stabiliser		1	
13	928 343 777 00	clamp		2	
14	928 343 793 04	stabiliser mounting		2	
15	900 075 043 02	hexagon-head bolt M 10 X 30	/RL	4	
(15)	N 010 275 3	hexagon-head bolt M 10 X 35	/LL	1	
(15)	900 075 043 02	hexagon-head bolt M 10 X 30	/LL	3	
16	900 027 016 02	lock ring B 10		4	
17	928 343 069 01	stabiliser mounting		2	

Pos	Part Number	Name	Remarks	Qty	Model	Pos	Part Number	Name	Remarks	Qty	Model
18	N 022 141 1	lock nut M 12 X 1,5		2							
19	N 010 154 3	hexagon-head bolt M 12 X 1,5 X 55		2							
		- -- E N D -- -									

Model	Year	MG	SG	Illustration	Restrictions	Update				
928	86	4	02	402-00		179	14:38	01.09.2004	PORSCHE	PET	PORSCHE

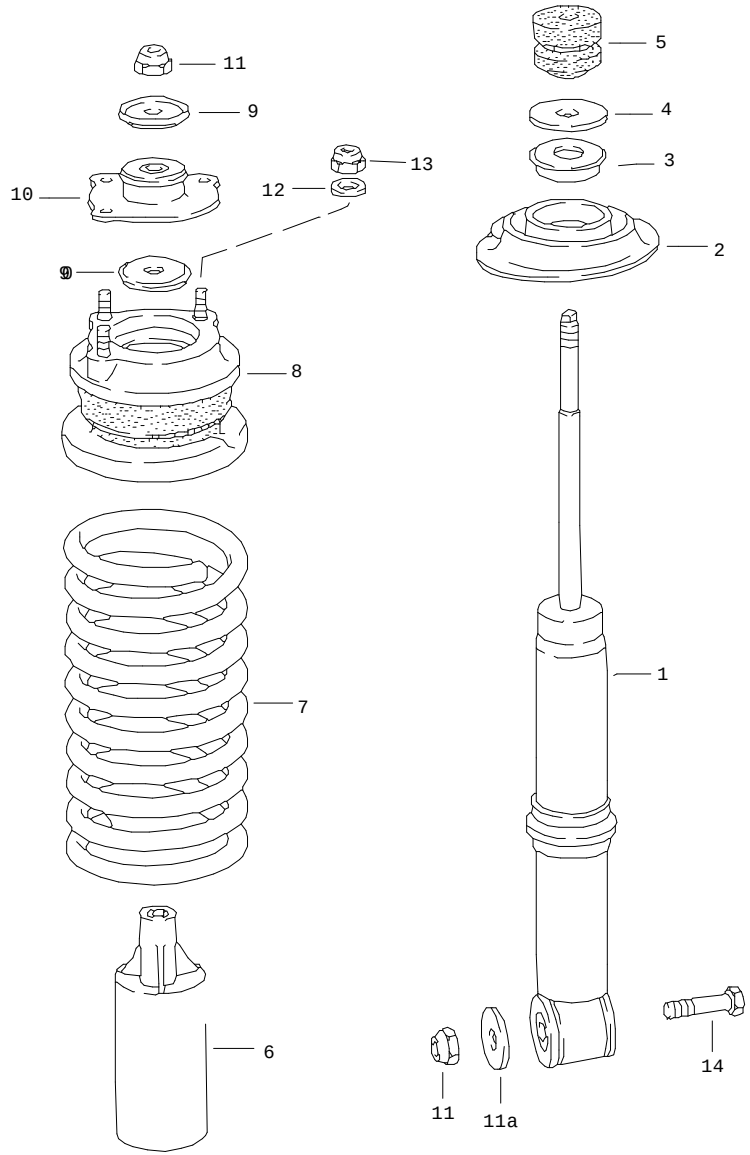

Pos	Part Number	Name	Remarks	Qty	Model
		springs front axle F >>92ES8 40218 F >>92ES8 49566			(J)
1	928 343 055 04	vibration damper - boge -		2	
(1)	928 343 055 05	vibration damper - bilstein -		2	M 474
2	928 343 525 00	concave washer		2	
-	928 343 533 00	spacer ring		X	
3	928 333 551 00	supporting cover		2	
4	911 333 511 00	washer		2	
5	928 343 527 02	additional spring		2	
6	928 343 507 02	protective tube		2	
7	928 343 511 03	front wheel spring		1	
	904	marked 1 set white only together with damper - boge -			
(7)	928 343 511 04	front wheel spring		1	M 474
	204	marked 1 set green white only together with damper - bilstein -			
8	928 343 047 07	concave washer		2	
9	928 343 523 00	washer		2	
10	928 343 051 01	mounting for absorber		2	
11	900 910 046 02	lock nut NM 12 X 1,5		4	
11A	999 025 074 02	washer		2	

Pos	Part Number	Name	Remarks	Qty	Model	Pos	Part Number	Name	Remarks	Qty	Model
12	900 025 008 09	washer A 10,5		6							
13	900 910 031 09	lock nut NM 10		6							
14	900 082 044 02	hexagon-head bolt 12 X 1,5 X 125		2							
		- -- E N D -- -									

Model	Year	MG	SG	Illustration	Restrictions	Update				
928	86	4	02	402-05		179	14:39	01.09.2004	PORSCHE	PET	PORSCHE

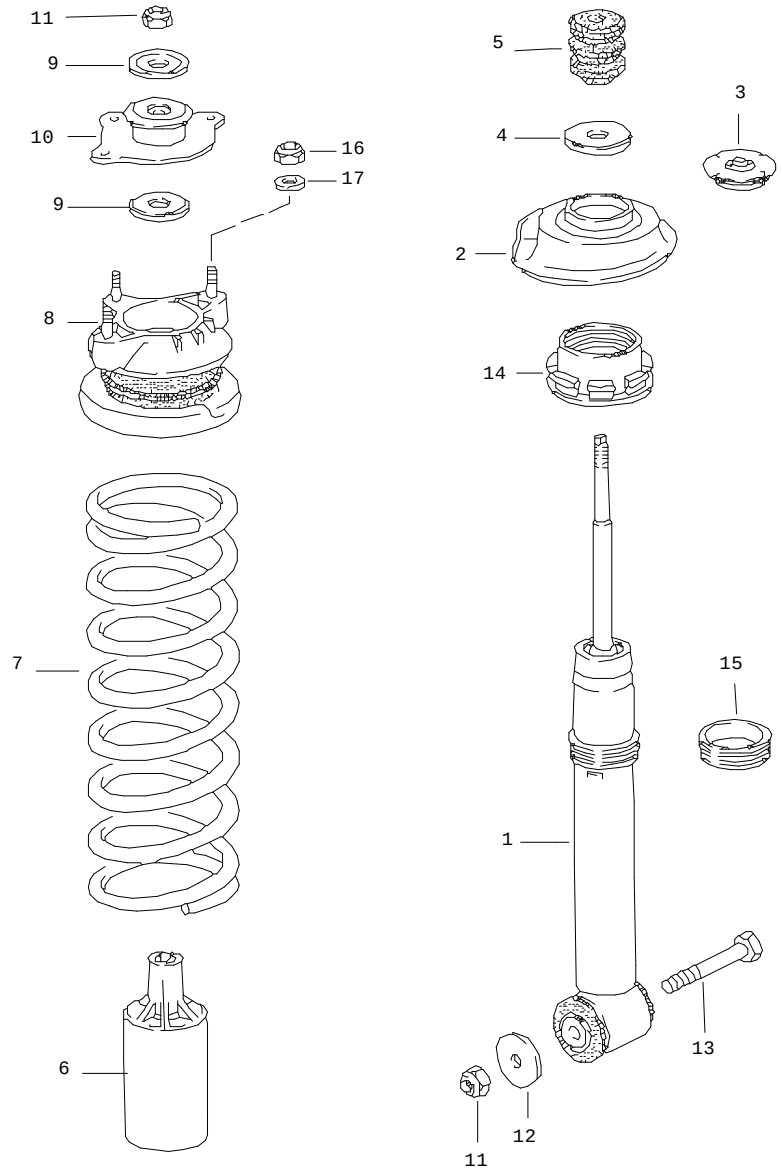

Pos	Part Number	Name	Remarks	Qty	Model
		springs front axle F 92ES8 40219>> F 92ES8 49567>>	-85		(J)
1	928 343 055 04	vibration damper - boge -		2	
(1)	928 343 055 06	vibration damper - bilstein -		2	
2	928 343 525 03	concave washer - boge -		2	
(2)	928 343 525 04	concave washer - bilstein -		2	
3	928 333 551 00	supporting cover - boge -		2	
4	911 333 511 00	washer		2	
5	928 343 527 02	additional spring		2	
6	928 343 507 03	boot		2	
7	928 343 511 06	front wheel spring		1	
	204	marked 1 set green			
8	928 343 047 07	concave washer		2	
9	928 343 523 00	washer		4	
10	928 343 051 01	mounting for absorber		2	
11	900 910 046 02	lock nut NM 12 X 1,5		4	
12	999 025 074 02	washer		2	
13	900 082 044 02	hexagon-head bolt M 12 X 1,5 X 125		2	
14	928 343 535 02	nut - boge -		2	
(14)	928 343 535 00	nut - bilstein -		2	
15	928 343 537 00	threaded ring - boge -		2	

Pos	Part Number	Name	Remarks	Qty	Model	Pos	Part Number	Name	Remarks	Qty	Model
16	900 025 008 09	washer A 10,5		3							
17	900 910 031 09	lock nut M 10		3							
		- -- E N D -- -									

Model	Year	MG	SG	Illustration	Restrictions	Update				
928	86	4	02	402-06		179	14:39	01.09.2004	PORSCHE	PET	PORSCHE

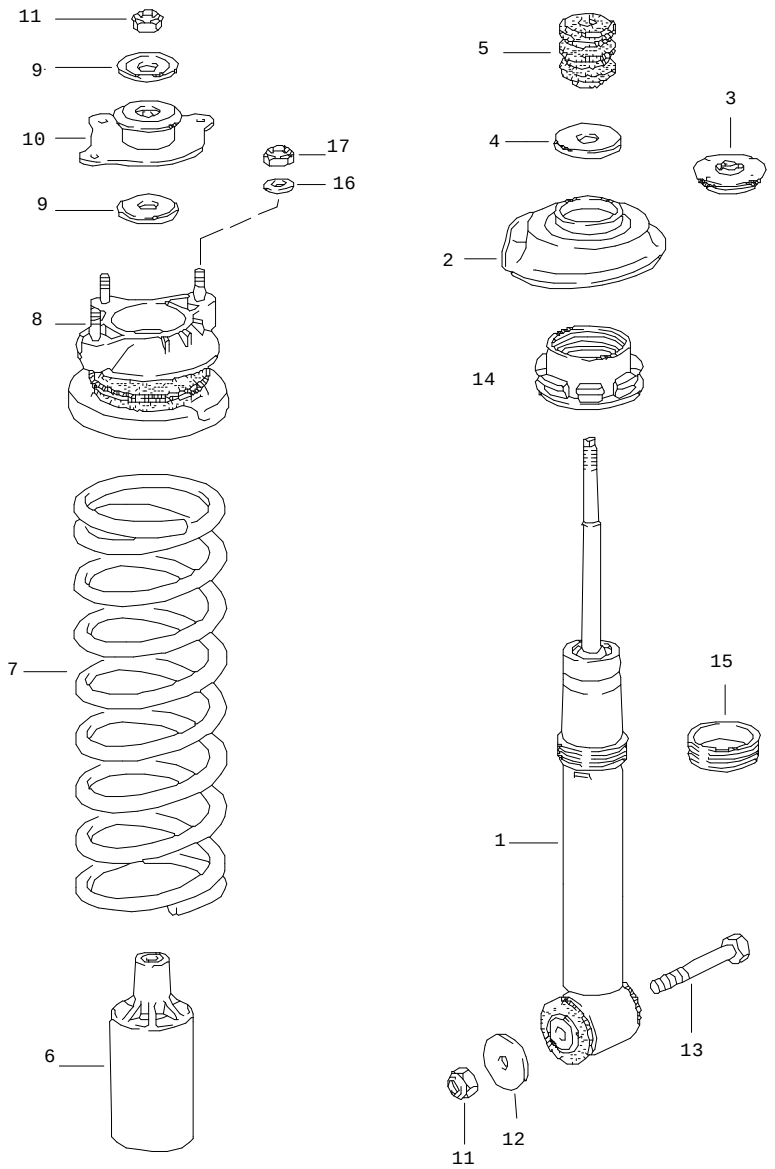

Pos	Part Number	Name	Remarks	Qty	Model
		springs front axle	86		
1	928 343 055 07	vibration damper - boge -		2	
(1)	928 343 055 09	vibration damper - boge -		2	M 474
2	928 343 525 03	concave washer - boge -		2	
3	928 333 551 00	supporting cover - boge -		2	
4	911 333 511 00	washer		2	
5	928 343 527 02	additional spring		2	
6	928 343 507 03	boot		2	
7	928 343 511 09	front wheel spring 1 set		1	
	404	marked brown			
8	928 343 047 07	concave washer		2	
9	928 343 523 00	washer		4	
10	928 343 051 01	mounting for absorber		2	
11	N 022 141 1	lock nut NM 12 X 1,5		4	
12	999 025 074 02	washer		2	
13	900 082 044 02	hexagon-head bolt M 12 X 1,5 X 125		2	
14	928 343 535 02	nut - boge -		2	
15	928 343 537 00	threaded ring - boge -		2	
16	900 025 008 09	washer A 10,5		3	
17	900 910 031 09	lock nut NM 10		3	
		- -- E N D -- -			

Model	Year	MG	SG	Illustration	Restrictions	Update				
928	86	4	03	403-00		179	14:39	01.09.2004	PORSCHE	PET	PORSCHE

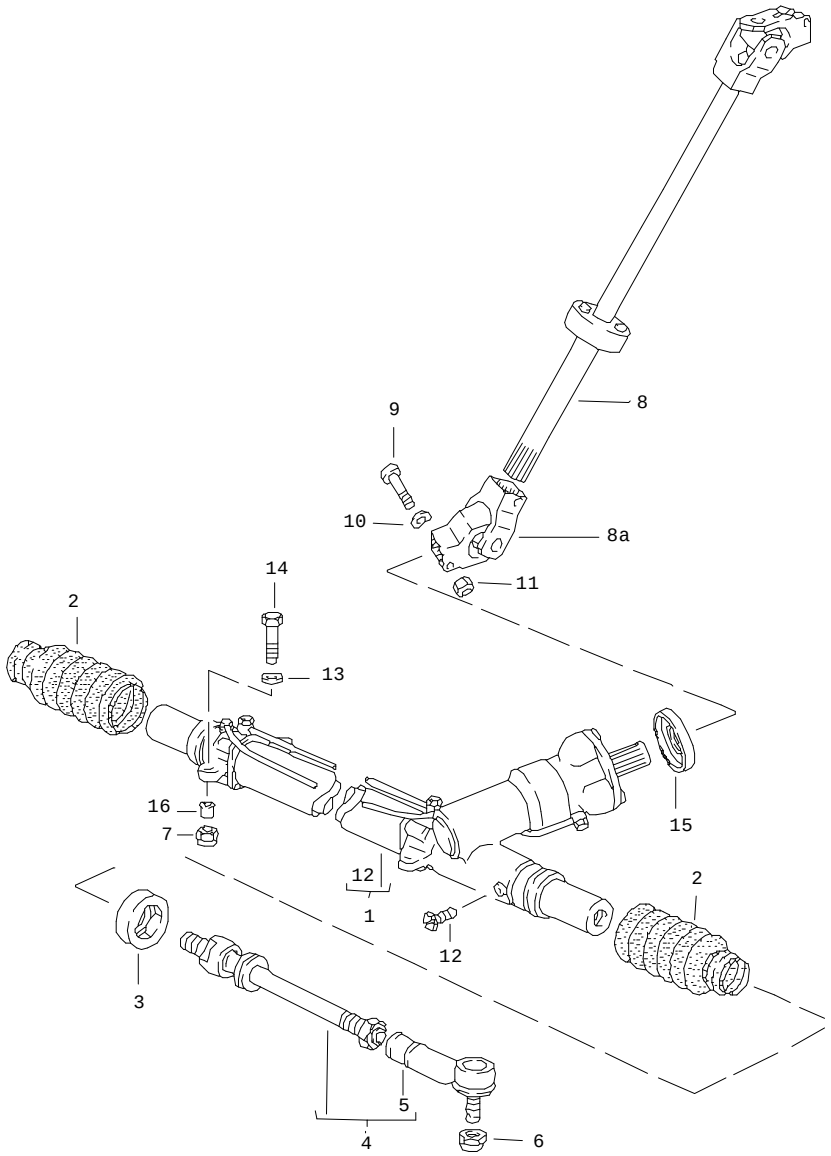

Pos	Part Number	Name	Remarks	Qty	Model
		steering gear track rod			
1	> 928 347 010 24	steering gear	/LL	1	
1	927 347 010 26	steering gear	/RL	1	
2	928 347 191 03	bellows		2	
3	928 347 329 04	stop		2	
4	928 347 031 01	tie rod	-85	2	
(4)	928 347 031 07	tie rod	86	2	
5	928 347 322 02	ball joint	-85	2	
(5)	928 347 322 02	ball joint	86	2	
6	900 910 046 02	lock nut		2	
7	900 910 031 09	lock nut		4	
8	928 347 093 01	intermed. steering shaft	/LL	1	
(8)	927 347 093 01	intermed. steering shaft	/RL	1	
8A	928 347 021 04	universal joint		1	
9	928 347 128 01	fit bolt	-84	3	
(9)	N 010 359 4	hexagon-head bolt	86	3	
10	N 012 241 8	spring washer B 8		3	
11	900 910 022 02	lock nut		3	
12	999 063 002 40	screw plug AM 12 X 1,5		1	
13	900 028 005 02	spring washer -A 10-		4	
14	N 010 445 2	hexagon-head bolt M 10 X 45	/LL	4	
(14)	N 010 445 2	hexagon-head bolt M 10 X 45	/RL	3	
(14)	N 010 450 5	hexagon-head bolt	/RL	1	
15	928 347 923 00	protection cap		1	

Pos	Part Number	Name	Remarks	Qty	Model	Pos	Part Number	Name	Remarks	Qty	Model
16	928 347 779 03	bush		4							
		- -- E N D -- -									

Model	Year	MG	SG	Illustration	Restrictions	Update	14:39	01.09.2004	PORSCHE	PET	PORSCHE
928	86	4	03	403-01		179					

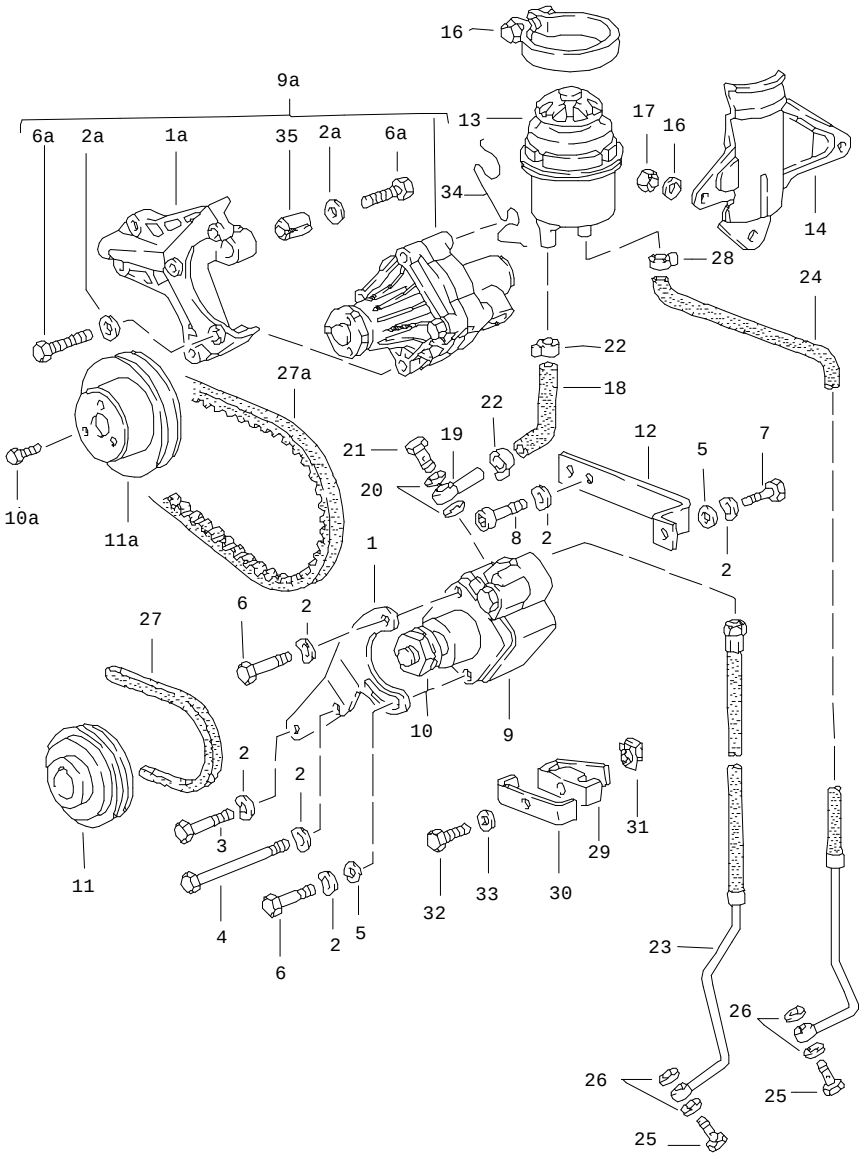

Pos	Part Number	Name	Remarks	Qty	Model
		steering lines			
1	E 928 347 443 07	support	-84	1	
1A	A 928 347 121 03	support	85-	1	
1A	928 347 121 03	support		1	
2	900 025 007 02	washer A 8,4		7	
2A	900 025 007 02	washer A 8,4		5	
3	N 010 239 11	hexagon-head bolt M 8 X 18		1	
4	900 074 050 02	hexagon-head bolt M 8 X 120		1	
(4)	900 075 321 02	screw M 8 X 80		1	
5	900 025 007 02	washer A 8,4		2	
6	900 075 085 02	hexagon-head bolt M 8 X 20	-84	2	
6A	N 010 353 3	hexagon-head bolt M 8 X 42		4	
7	900 074 139 02	hexagon-head bolt M 8 X 55		1	
8	900 119 052 02	pan-head screw M 8 X 16		2	
9	> 928 347 431 05	vane type pump	-84	1	
-	928 347 921 00	repair kit	-84	1	
9A	> 928 347 089 01	vane type pump	85-	1	
-	928 347 921 01	repair kit	85-	1	
10	900 910 094 02	lock nut M 14 X 1,5		1	
10A	999 072 005 09	hexagon-head bolt M 6 X 12	85-	3	
11	928 347 441 08	pulley	-84	1	

Pos	Part Number	Name	Remarks	Qty	Model
11A	928 347 441 10	pulley	85-	1	
12	928 101 112 00	strut		1	
13	928 347 015 03	oil tank		1	
-	928 347 925 00	cover oil tank		1	
-	928 347 927 00	gasket cover		1	
14	928 347 333 00	support		1	
-	928 501 817 02	retaining bracket pressure line		1	
15	999 512 350 02	hose clamp SGL 80-100-9	-84	1	
(15)	999 512 350 02	hose clamp SGL 80-100-9	85-	1	
16	900 151 008 02	washer B 8,4		3	
17	900 084 004 02	hexagon nut NM 8		3	
18	928 347 445 00	hose		1	
(18)	928 347 445 05	hose	85-	1	
19	999 230 077 02	nipple	-84	1	
(19)	999 230 158 02	nipple	85-	1	
20	N 013 832 2	sealing ring A 18 X 22	-84	2	
(20)	N 100 184 01	sealing ring A 16 X 20	85-	2	
21	900 134 010 02	banjo bolt	-84	1	
(21)	900 134 014 02	banjo bolt A 10	85-	1	
22	999 512 297 02	hose clamp	-84	3	
(22)	999 512 554 00	hose clamp	85-	3	
23	928 347 447 02	pressure line	/LL -84	1	
(23)	928 347 447 05	pressure line	/LL 85-	1	
(23)	927 347 447 01	pressure line	/RL -84	1	
(23)	927 347 447 02	pressure line	/RL 85-	1	
(24)	928 347 449 06	return line	/LL	1	
-	999 511 134 02	clip 10/20	-84	1	
-	999 511 116 02	clamp B 15 X 15	85-	1	
(24)	927 347 449 02	return line	/RL	1	
-	900 067 008 02	pan-head screw M 6 X 12		1	
-	N 011 524 7	washer A 6,4	/RL	1	
25	900 134 007 02	banjo bolt		2	
26	900 123 042 20	sealing ring 14 X 18		4	
27	999 192 128 50	narrow v-belt 12,5 X 978	-84	1	
27A	999 192 286 50	v-belt 12,5 X 1000	85-	1	
28	N 023 569 2	hose clamp	-84	1	
(28)	999 511 116 02	clamp B 15 X 15	85-	1	
29	999 511 121 40	clip		1	
30	928 347 455 00	shim		1	
31	999 507 003 02	speed nut B 6,3		1	
32	900 187 032 02	tapping screw B 6,3 X 32		1	
(32)	900 187 015 02	tapping screw 6,3 X 16		1	
33	N 011 524 7	washer A 6,4		1	

Pos	Part Number	Name	Remarks	Qty	Model	Pos	Part Number	Name	Remarks	Qty	Model
34	928 347 429 00	support		1							
35	928 347 335 00	bush		1							
		- -- E N D -- -									

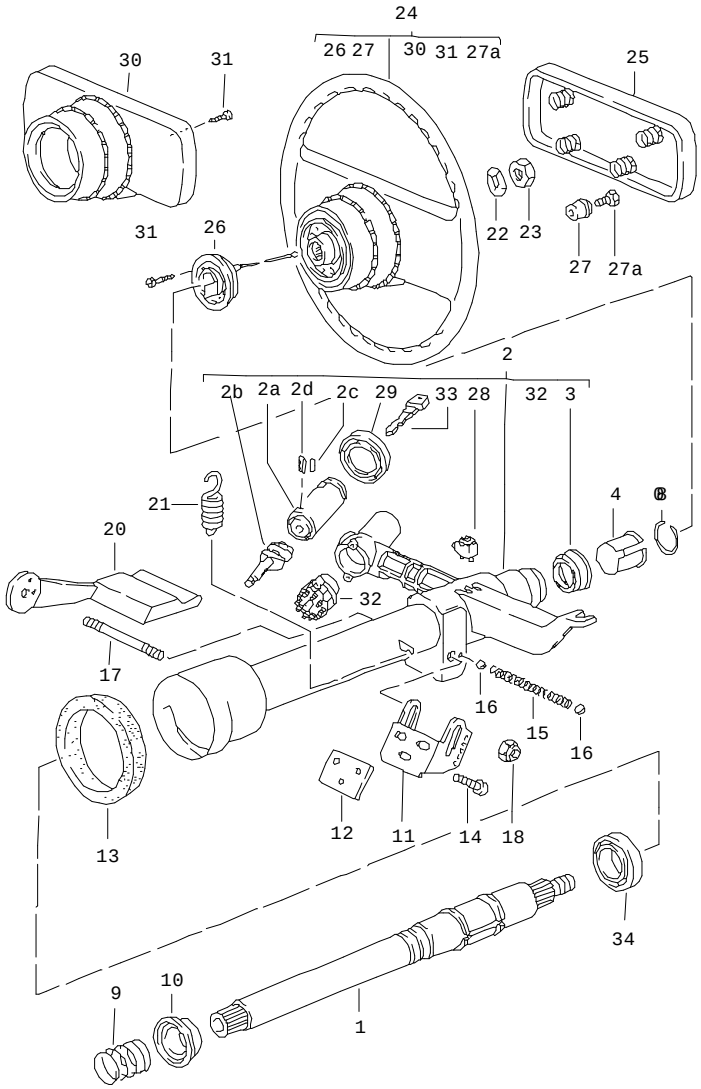

Pos	Part Number	Name	Remarks	Qty	Model
		steering steering wheel			
1	928 347 061 06	steering shaft		1	
2	928 347 903 02	steering lock with steering outer tube with 1 key w/o stipulated lock number		1	
(2)	928 347 903 03	steering lock with steering outer tube with 1 key state lock number		1	
2A	928 347 915 01	lock cylinder for steering lock with 1 key w/o stipulated lock number		1	
2A	928 347 917 01	lock cylinder for steering lock with 1 key state lock number key see group 8/04/05 POS.53/1		1	
2B	928 347 919 00	control cam		1	
2C	900 091 001 00	dowel pin 3 X 8		1	
2D	900 095 007 00	roll pin 3 X 12		1	
3	928 347 791 00	steering shaft bearing		1	
4	928 347 739 02	support ring		1	
8	113 415 531	snap ring		1	
9	928 347 213 04	compression spring	-84	1	
(9)	928 347 213 07	compression spring	85-	1	
-	N 100 545 01	shim 0,3 MM		X	

Pos	Part Number	Name	Remarks	Qty	Model
-	N 027 416 1	shim 0,5 MM		X	
-	N 100 511 01	shim 1,0 MM		X	
-	N 100 512 01	shim 1,5 MM		X	
10	928 347 241 01	steering shaft bearing	-85	1	
10	928 347 241 01	steering shaft bearing	86-	1	
11	928 347 369 04	bracket		1	
12	928 347 370 01	desk pad		X	
(12)	928 347 370 02	desk pad		X	
(12)	928 347 370 03	desk pad		X	
13	A 928 347 659 02	sealing ring		1	
13	928 347 659 02	sealing ring		1	
14	N 014 782 1	pan-head screw M 6 X 25		3	
15	928 347 375 01	compression spring		1	
16	900 108 020 00	ball 6 MM		2	
17	928 347 259 02	threaded bolt		1	
18	900 910 022 02	lock nut		2	
20	928 347 033 02	control lever		1	
21	928 347 377 03	tension spring		1	
22	N 012 239 1	spring washer B 18		1	
23	900 078 007 02	hexagon nut M 18 X 1,5		1	
24	928 347 084 02	sports steering wheel		1	
	1AJ	black			
	4RB	brown			
	7LD	burgundy			
	30B	blue			
	6JD	dark green	85-		
	5JX	greyish green	85-		
(24)	928 347 084 04	sports steering wheel		1	M 018
	1AJ	black			
	4RB	brown			
	7LD	burgundy			
	30B	blue			
	6JD	dark green	85-		
	5JX	greyish green	85-		
25	928 347 087 01	pad for horn	-84	1	
	1DB	black			
	4RB	brown			
	7LD	burgundy			
	30B	blue logo - 928 -			
(25)	A 911 347 859 01	pad for horn	85-	1	
	1AJ	black			
	4RB	brown			
	7LD	burgundy			
	30B	blue			
	6JD	dark green			
	5JX	greyish green logo - PORSCHE -			
(25)	911 347 859 07	pad for horn	85-	1	
	1AJ	black			
	4RB	brown			

Pos	Part Number	Name	Remarks	Qty	Model
	7LD	burgundy			
	30B	blue			
	6JD	dark green			
	5JX	greyish green logo - PORSCHE -			
26	928 347 099 00	slip ring		1	
27	321 419 779 A	insulating bush		4	
27A	900 075 230 10	hexagon-head bolt M 4 X 16		4	
29	928 347 913 00	rubber boot		1	
30	928 347 857 02	hub cover		1	
	1DB	black			
	4RB	brown			
	7LD	burgundy			
	30B	blue			
	6JD	dark green	85-		
	5JX	greyish green	85-		
31	113 415 869	oval-head screw M 3,5 X 10		6	
		- -- E N D -- -			

Model	Year	MG	SG	Illustration	Restrictions	Update		
928	86	4	98	REP		179	15:26	01.09.2004

Pos	Part Number	Name	Remarks	Qty	Model
		repair kits			
>>	> 928 347 921 00	repair kit for vane type pump 928 347 431 05 comprising: sealing ring front sealing ring inner support ring inner	-84	X	
>>	> 928 347 921 01	repair kit for vane type pump 928 347 431 12 comprising: sealing ring front sealing ring inner sealing ring inner sealing ring inner	85-	X	
		- -- E N D -- -			

Model	Year	MG	SG	Illustration	Restrictions	Update				
928	86	5	01	501-00		179	14:40	01.09.2004	PORSCHE	PET	PORSCHE

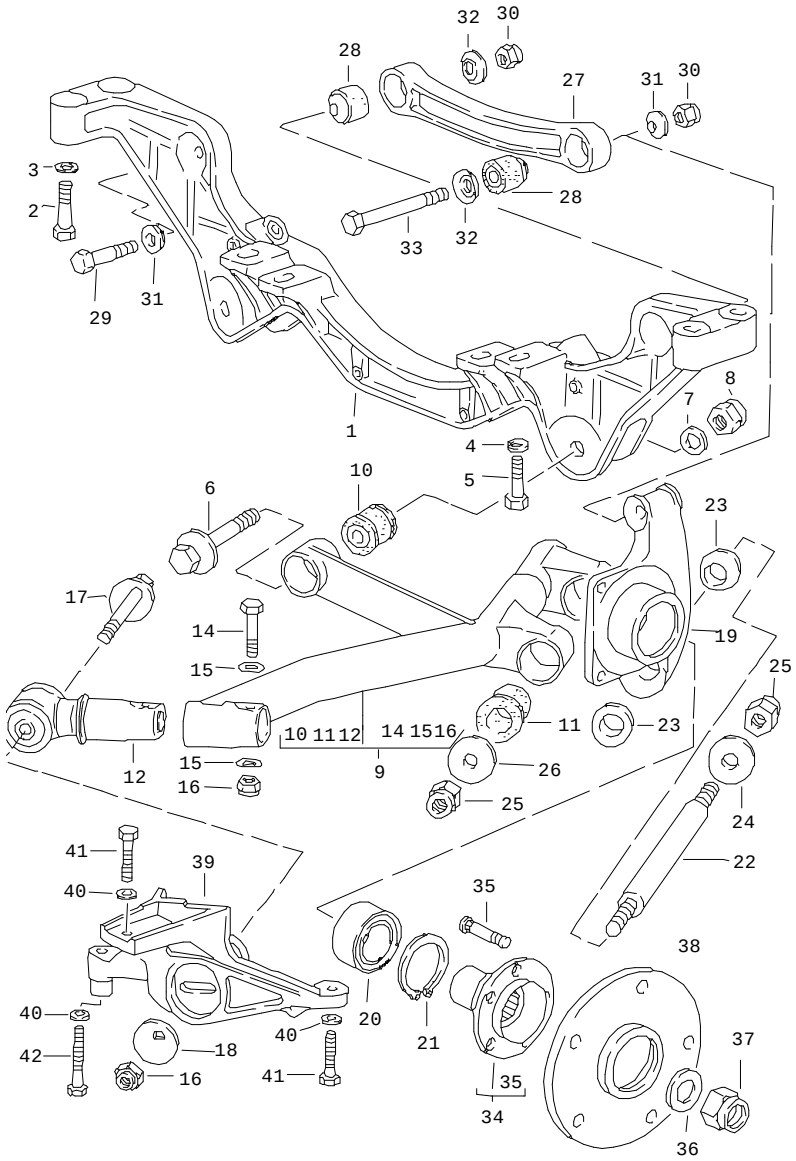

Pos	Part Number	Name	Remarks	Qty	Model
		rear axle			
(1)	928 331 131 17	rear axle cross support		1	M 249
(1)	928 331 131 18	rear axle cross support		1	M 481
2	N 010 473 6	hexagon-head bolt M 10 X 75	-85	4	
(2)	N 010 473 6	hexagon-head bolt M 10 X 75	86	4	
3	900 223 011 02	washer B 10,5		4	
4	999 025 086 02	square washer 12,1 X 24		2	
4A E	999 025 085 02	washer 12,5 X 30 X 1		X	
5	N 010 141 4	hexagon-head bolt M 12 X 1,5 X 45		2	
6	928 331 075 04	eccentric screw		2	
7	928 331 581 00	washer		2	
8	900 910 094 02	lock nut		2	
9	928 331 043 06	control arm	/L	1	
(9)	928 331 044 06	control arm	/R	1	
10	928 331 588 10	rubber mounting		2	
11	928 331 588 13	rubber mounting		4	
12	928 331 085 00	rocker bar		2	
14	N 010 183 3	hexagon-head bolt M 12 X 1,5 X 75		2	
15	900 028 014 02	spring washer		4	
16	N 022 141 4	lock nut		4	
17	928 331 659 04	eccentric screw	-85	2	
(17)	928 331 659 05	eccentric screw	86	2	
18	928 331 523 12	eccentric washer		2	
19	928 331 219 03	wheel carrier	/L -84	1	

Pos	Part Number	Name	Remarks	Qty	Model
(19)	928 331 219 03	wheel carrier	/L 85	1	
(19)	928 331 219 04	wheel carrier	/L 84-85	1	M 593
(19)	928 331 219 09	bracket	/L 86	1	
(19)	928 331 220 03	wheel carrier	/R -85	1	
(19)	928 331 220 04	wheel carrier	/R -84	1	M 593
(19)	928 331 220 04	wheel carrier	/R 85	1	M 593
(19)	928 331 220 09	bracket	/R 86	1	
20	A 928 331 583 00	angular-contact bearing		2	
(20)	999 053 050 00	angular-contact bearing		2	
21	900 042 030 02	circlip		2	
22	928 331 641 01	pin		2	
23	928 331 655 06	cone washer		4	
24	928 331 647 02	washer		2	
25	900 910 094 02	lock nut		4	
26	928 331 647 00	washer		4	
27	928 331 101 02	control arm		2	
28	928 331 089 02	link bearing		4	
29	N 010 470 7	hexagon-head bolt M 10 X 70		2	
30	900 910 031 09	lock nut		4	
31	928 331 575 01	cone washer		4	
32	928 331 649 02	cone washer		2	
33	N 010 482 3	hexagon-head bolt M 10 X 105		2	
34	928 331 065 07	wheel hub		2	
(34)	928 331 065 08	wheel hub widening of track		2	
35	928 341 671 02	wheel bolt		10	
(35)	901 331 671 01	wheel bolt widening of track		10	
36	928 331 591 02	washer		2	
37	900 910 093 02	lock nut		2	
38	477 501 701	spacer tube		2	
39	928 331 111 00	link bearing	/L 86	1	
(39)	928 331 112 00	link bearing	/R 86	1	
40	900 223 011 02	washer	86	10	
41	N 010 450 5	hexagon-head bolt M 10 X 50	86	4	
42	N 010 473 6	hexagon-head bolt M 10 X 75	86	6	

- -- E N D -- -

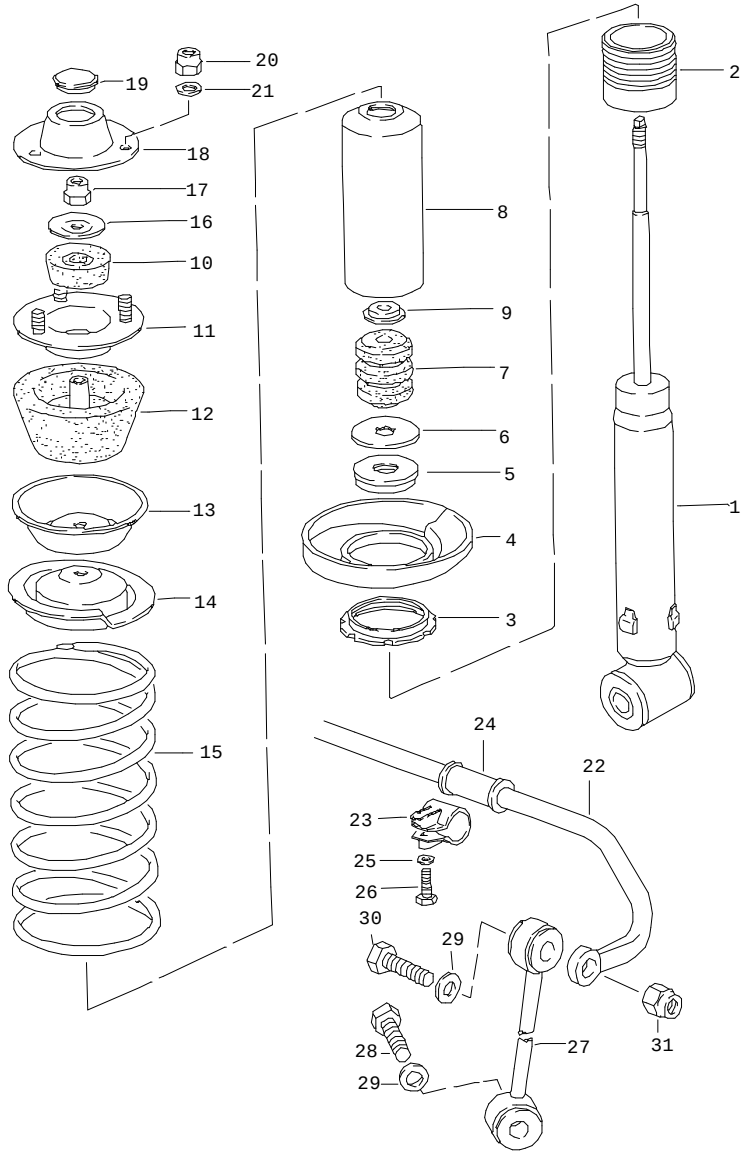

Pos	Part Number	Name	Remarks	Qty	Model
		springs stabiliser			
1	928 333 051 08	vibration damper - boge -	-85	2	
1	928 333 051 12	vibration damper - bilstein -	-85	2	M 474
(1)	928 333 051 16	vibration damper - boge -	86	2	
(1)	928 333 051 17	vibration damper - boge -	86	2	M 474
2	928 333 511 05	threaded sleeve - boge -		2	
3	928 333 513 02	adjusting nut - boge -		2	
3	928 333 513 01	adjusting nut - bilstein -	-85	2	M 474
4	928 333 521 02	concave washer F >>92ES8 40415 F >>92ES8 49567		2 (J)	
(4)	928 333 521 07	concave washer F 92ES8 40416>> F 92ES8 49568>> F 92ES8 60562>>		2 (J)	
5	928 333 551 00	supporting cover - boge -		2	
6	911 333 511 00	washer		2	
7	928 333 518 10	additional spring		2	
8	928 333 502 01	protective tube		2	
9	928 333 517 01	retaining ring		2	
10	928 333 465 01	damping rubber		2	
11	928 333 064 00	fastening plate		2	
12	928 333 043 00	supporting rubber		2	
13	928 333 436 00	supporting plate F >>92ES8 40415 F >>92ES8 49567		2 (J)	

Pos	Part Number	Name	Remarks	Qty	Model
(13)	928 333 436 02	supporting plate F 92ES8 40416>> F 92ES8 49568>>		2 (J)	
14	928 333 522 04	concave washer F >>92ES8 40415 F >>92ES8 49567		2 (J)	
(14)	928 333 522 08	concave washer F 92ES8 40416>> F 92ES8 49568>>		2 (J)	
15	928 333 531 12	rear wheel spring 1 set		1	
	104	marked yellow F >>92ES8 40415 F >>92ES8 49567		 (J)	
(15)	928 333 531 14	rear wheel spring 1 set		1	
	304	marked blue F 92ES8 40416>> F 92ES8 49568>>		 (J)	
16	928 333 525 01	washer		2	
17	900 910 046 02	lock nut		2	
18	928 333 151 01	cover		2	
19	999 703 131 40	cover		2	
20	900 910 031 09	lock nut		6	
21	900 025 008 09	washer A 10,5		6	
22	928 333 701 34	stabiliser 22 MM $		1	
23	928 333 085 00	clip		2	
24	928 333 754 26	bearing 22 MM $		2	
25	477 407 425	washer		2	
26	N 010 472 4	hexagon-head bolt M 10 X 85		2	
27	928 333 059 01	stabiliser mounting	/L	1	
(27)	928 333 060 01	stabiliser mounting	/R	1	
28	N 010 445 2	hexagon-head bolt M 10 X 45		2	
29	928 333 761 00	washer		4	
30	900 074 063 02	hexagon-head bolt M 10 X 55		2	
31	900 910 031 09	lock nut		2	

- -- E N D -- -

Model	Year	MG	SG	Illustration	Restrictions	Update	14:40	01.09.2004	PORSCHE	PET	PORSCHE
928	86	5	02	502-05		179					

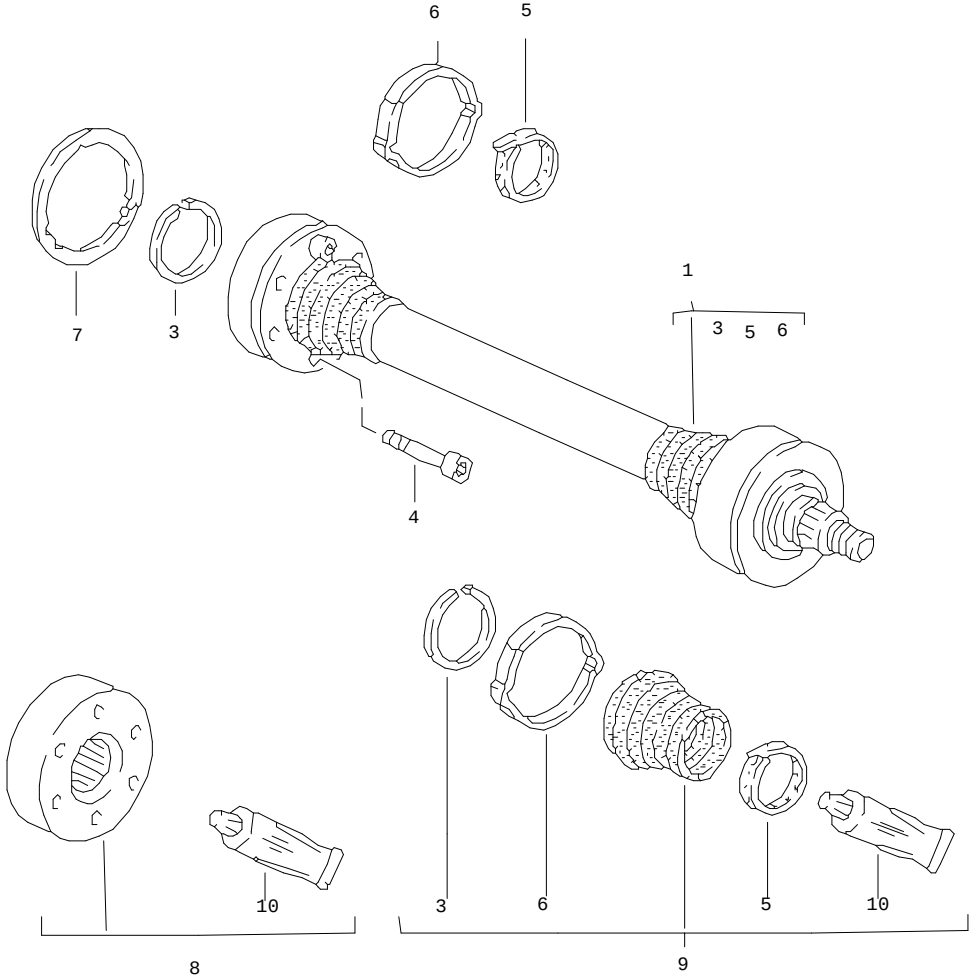

Pos	Part Number	Name	Remarks	Qty	Model
		drive shaft F >>92FS8 41007 F >>92FS8 40289 F >>92FS8 49562			M 593 (J)
1	928 332 033 30	drive shaft	-84	2	
(1)	928 332 033 35	drive shaft	-84	2	M 593
3	999 152 084 01	circlip		2	
4	900 067 168 01	pan-head screw M 10 X 57	-84	12	
5	928 332 257 01	clip		4	
6	999 512 315 02	clamp	-84	4	
7	930 332 297 00	gasket	-84	2	
8	928 332 923 00	repair kit drive shaft	-84	X	
9	928 332 924 01	repair kit drive shaft	-84	X	
10	000 043 005 00	grease for drive shaft optimoly 1 90-g tube		X	
		- -- E N D -- -			

Model	Year	MG	SG	Illustration	Restrictions	Update	14:41	01.09.2004	PORSCHE	PET	PORSCHE
928	86	5	02	502-06		179					

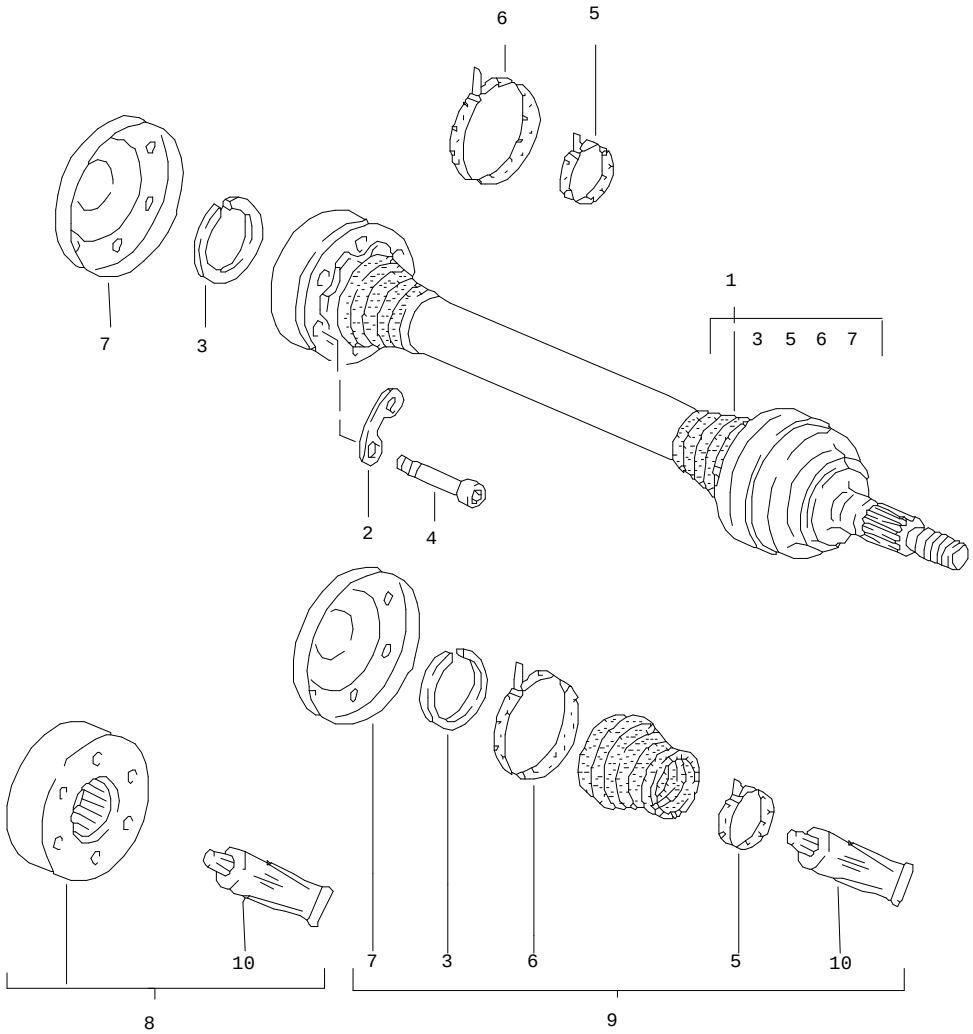

Pos	Part Number	Name	Remarks	Qty	Model
		drive shaft F 92FS8 41008>> F 92FS8 40290>> F 92FS8 49563>>			M 593 (J)
1	928 332 033 40	drive shaft	-85	1	
(1)	928 332 033 41	drive shaft	-85	1	M 593
(1)	928 332 033 44	drive shaft	86	2	
2	911 332 191 00	plate		6	
3	999 152 084 01	circlip		2	
4	900 067 123 01	pan-head screw M 10 X 50		12	
5	928 332 257 01	clip		4	
6	911 332 257 00	clip		4	
7	928 332 267 01	cover		2	
8	928 332 923 01	repair kit		X	
9	928 332 924 02	repair kit		X	
10	000 043 005 00	grease for drive shaft optimoly 1 90-g tube		X	
		- -- E N D -- -			

Model	Year	MG	SG	Illustration	Restrictions	Update		
928	86	5	98	REP		179	15:28	01.09.2004

Pos	Part Number	Name	Remarks	Qty	Model
		repair kit			
>>	> 928 332 924 01	repair kit for drive shaft 928.332.033.30/35 comprising: dust bellows grease for drive shaft clip hose clamp snap ring		X	
>>	> 928 332 924 02	repair kit for drive shaft 928.332.033.40/41/43 comprising: dust bellows grease for drive shaft clip snap ring cover		X	
>>	> 928 332 923 00	repair kit for drive shaft 928.332.033.30/35 comprising: joint grease for drive shaft		X	
>>	> 928 332 923 01	repair kit for drive shaft 928.332.033.40/41/43 comprising: joint grease for drive shaft		X	
		- -- E N D -- -			

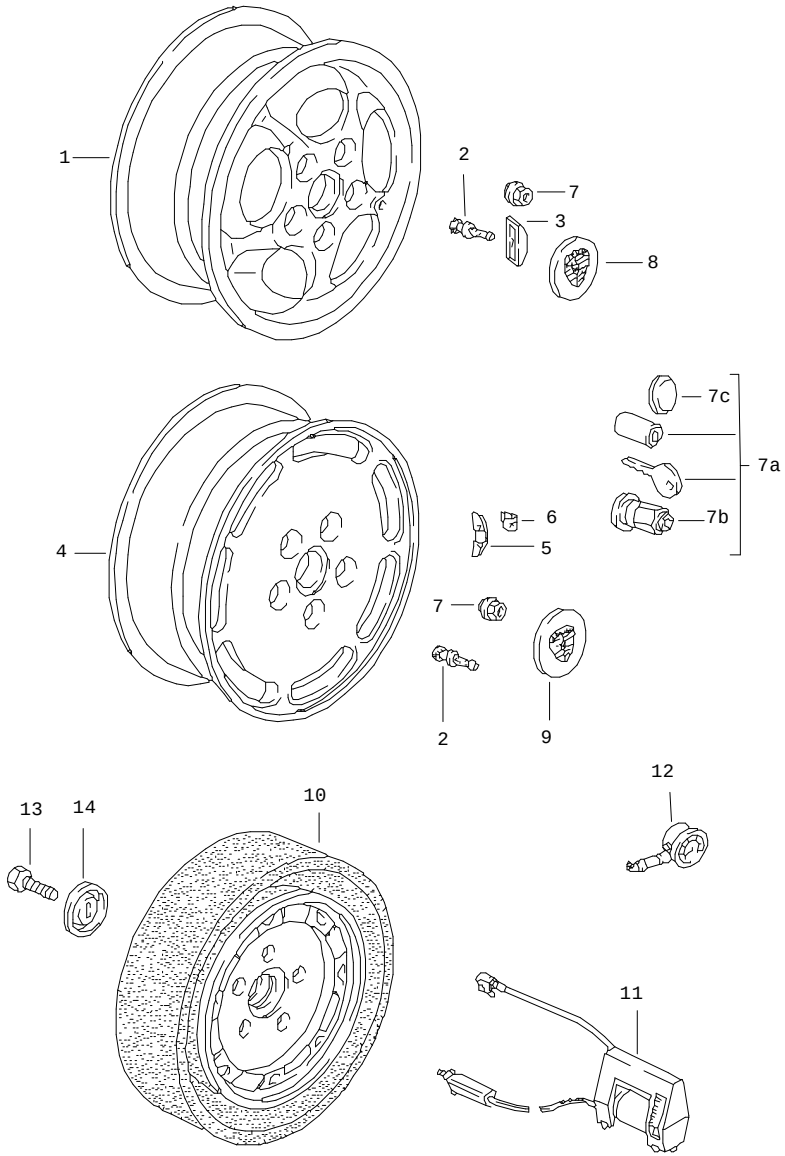

Pos	Part Number	Name	Remarks	Qty	Model
		wheels			
1	928 361 016 00	alloy wheel 7 J X 16 silver metallic	-85	4	
-	928 362 114 20	alloy wheel 7 J X 16 silver metallic for winter use		4	
2	900 265 001 50	rubber valve		4	
3	-	balance stick-on weight	-85	X	
-	901 361 410 50	balance stick-on weight 5 G		X	
-	901 361 410 00	balance stick-on weight 10 G		X	
-	901 361 411 50	balance stick-on weight 15 G		X	
-	901 361 411 00	balance stick-on weight 20 G		X	
-	901 361 412 50	balance stick-on weight 25 G		X	
-	901 361 412 00	balance stick-on weight 30 G		X	
-	901 361 413 50	balance stick-on weight 35 G		X	
-	901 361 413 00	balance stick-on weight 40 G		X	
-	901 361 414 50	balance stick-on weight 45 G		X	
-	901 361 414 00	balance stick-on weight 50 G		X	
-	901 361 415 50	balance stick-on weight 55 G		X	
-	901 361 415 00	balance stick-on weight 60 G		X	
-	901 361 416 50	balance stick-on weight 65 G		X	

Pos	Part Number	Name	Remarks	Qty	Model
-	901 361 416 00	balance stick-on weight 70 G		X	
-	901 361 417 50	balance stick-on weight 75 G		X	
-	901 361 417 00	balance stick-on weight 80 G		X	
4	928 362 115 01	alloy wheel 7 J X 16 forged light platinum		4	
(4)	928 362 115 00	alloy wheel 7 J X 16 forged silver metallic		4	
5		balance weight coated		X	
-	928 361 421 00	balance weight 5 G		X	
-	928 361 410 00	balance weight 10 G		X	
-	928 361 422 00	balance weight 15 G		X	
-	928 361 411 00	balance weight 20 G		X	
-	928 361 423 00	balance weight 25 G		X	
-	928 361 412 00	balance weight 30 G		X	
-	928 361 424 00	balance weight 35 G		X	
-	928 361 413 00	balance weight 40 G		X	
-	928 361 425 00	balance weight 45 G		X	
-	928 361 414 00	balance weight 50 G		X	
-	928 361 426 00	balance weight 55 G		X	

Pos	Part Number	Name	Remarks	Qty	Model
-	928 361 415 00	balance weight 60 G		X	
-	928 361 416 00	balance weight 70 G		X	
-	928 361 417 00	balance weight 80 G		X	
6	928 361 420 01	retaining clip		X	
7	999 182 003 36	wheel nut		20	
7A	928 361 047 03	wheel nut 1 set lockable	86	X	
7B	928 361 306 01	wheel nut	-85	X	
(7B)	928 361 306 03	wheel nut	86	X	
7C	965 361 167 00	cap	86	X	
8	928 361 032 01	hub cap for perforated disc wheel 928.361.016.00	-85	4	
9	477 601 051 D	hub cap for perforated disc wheel 928.361.021.05 928.362.115.01		4	
(9)	928 361 031 00	hub cap for perforated disc wheel 928.362.115.00		4	
(10)	928 362 030 02	emergency wheel 5 1/2 J X 15 with collapsible tire	85-	1	
-	996 361 521 00	boot for impeller		1	
11	911 361 510 03	small electric compressor		1	
12	911 722 201 02	tyre pressure gauge		1	
-	E 999 914 001 40	plastic gloves pieces		1 8	

Pos	Part Number	Name	Remarks	Qty	Model	Pos	Part Number	Name	Remarks	Qty	Model
-	E 911 361 522 00	protective film		1							
13	900 075 041 09	hexagon-head bolt M 10 X 25	-85	1							
(13)	N 040 281 1	hexagon-head bolt M 10 X 45	86	1							
14	477 813 157	washer		1							
		- -- E N D -- -									

Model	Year	MG	SG	Illustration	Restrictions	Update	14:41	01.09.2004	PORSCHE	PET	PORSCHE
928	86	6	02	602-00		179					

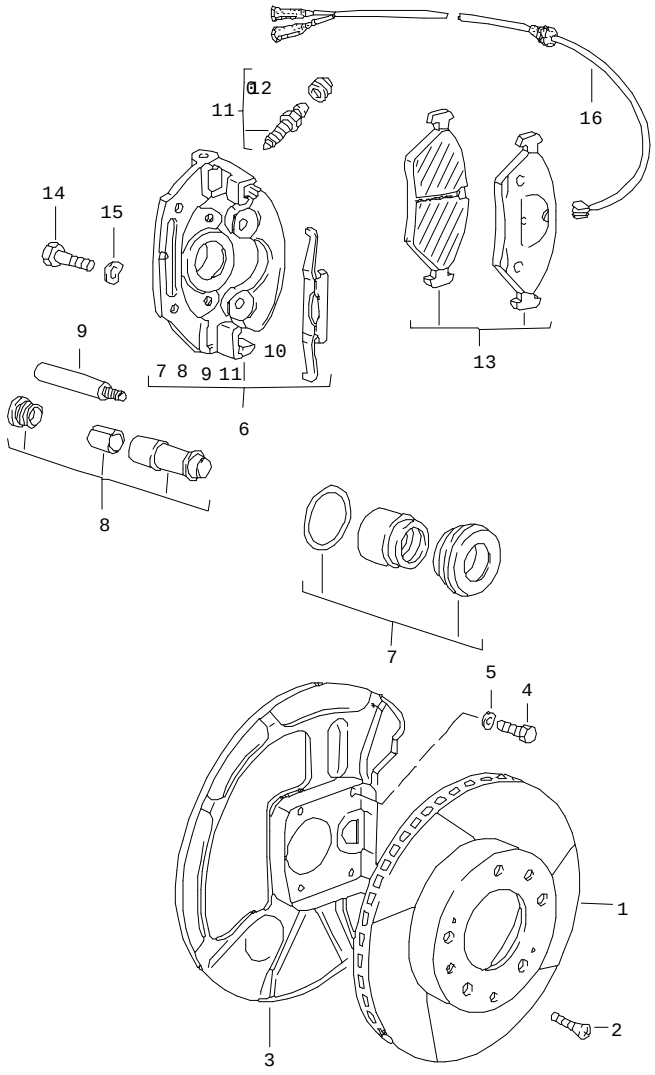

Pos	Part Number	Name	Remarks	Qty	Model
		disc brake front axle floating calliper use also: mounting parts for brake pad	-85		
1	928 351 043 01	brake disc	/L	1	
(1)	928 351 044 01	brake disc	/R	1	
2	N 033 167 1	countersunk-head screw M 6 X 12		4	
3	928 351 083 00	protective plate	/L	1	
(3)	928 351 084 00	protective plate	/R	1	
4	N 010 227 2	hexagon-head bolt M 7 X 12		8	
5	900 028 019 08	spring washer B 7		8	
6	928 351 427 00	floating calliper without pad F >>92DS8 41329	/L	1	
(6)	928 351 427 01	floating calliper without pad F 92DS8 41330>>	/L	1	
(6)	928 351 428 00	floating calliper without pad F >>92DS8 41329	/R	1	
(6)	928 351 428 01	floating calliper without pad F 92DS8 41330>>	/R	1	
-	999 134 027 02	banjo bolt F 92DS8 41330>>		2	
-	N 013 806 2	sealing ring F 92DS8 41330>>		4	
7	928 351 943 00	gasket set		X	
8	* 928 351 949 00	set of damping sleeves		X	
9	928 351 947 00	guide pin		4	

Pos	Part Number	Name	Remarks	Qty	Model
10	928 351 953 00	retainer spring F >>92DS8 41329		2	
(10)	928 351 953 01	retainer spring F 92DS8 41330>>		2	
11	928 351 945 01	ventilation valve F >>92DS8 41329		2	
(11)	928 351 945 02	ventilation valve F 92DS8 41330>>		2	
12	901 351 927 10	dust boot		2	
13	* 928 351 931 01	set of brake pads		1	
(13)	928 351 931 01	set of brake pads without asbestos		1	
14	N 010 142 2	hexagon-head bolt M 12 X 1,5 X 50		4	
15	900 028 014 02	spring washer B 12		4	
16	928 612 315 01	warning contact		2	
-	999 651 165 02	cable clamp		2	
-	999 651 162 40	cable holder		2	
-	999 651 154 40	cable tie		2	
-	999 651 161 40	cable tie		4	
		- -- E N D -- -			

Pos	Part Number	Name	Remarks	Qty	Model

Model	Year	MG	SG	Illustration	Restrictions	Update	14:42	01.09.2004	PORSCHE	PET	PORSCHE
928	86	6	02	602-01		179					

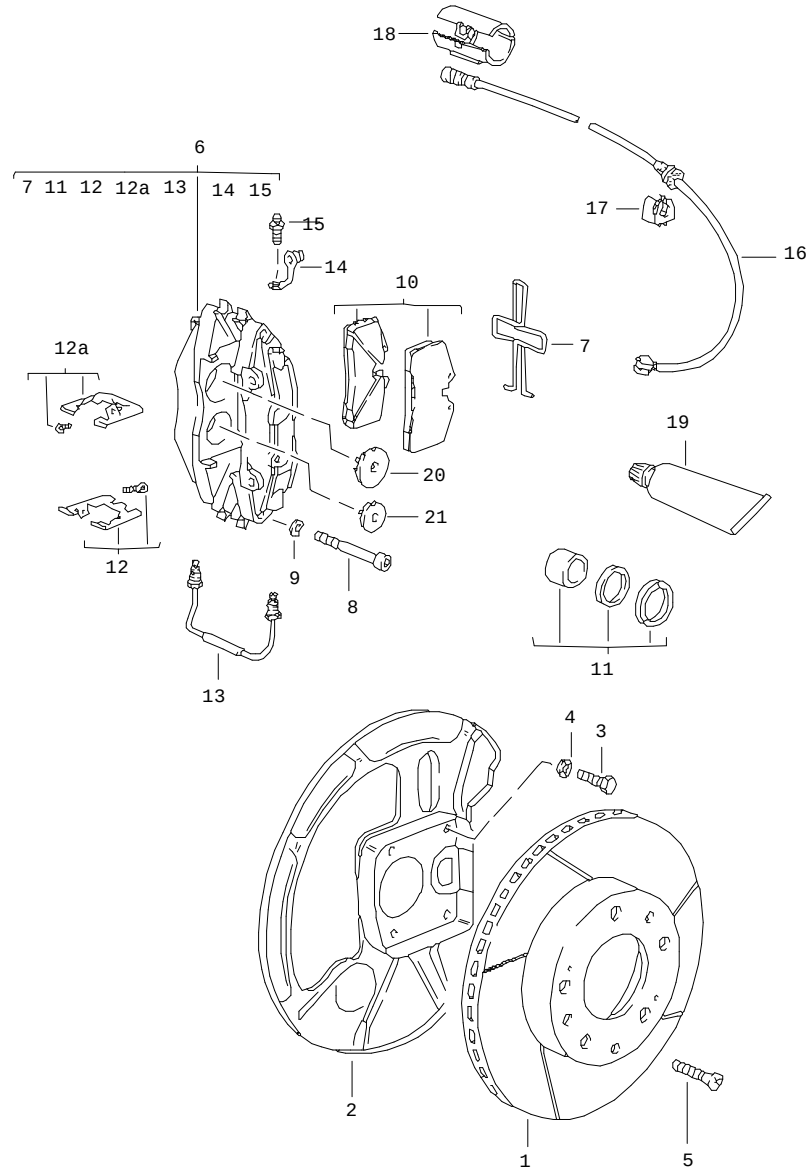

Pos	Part Number	Name	Remarks	Qty	Model
		disc brake front axle fixed calliper use also: mounting parts for brake pad	86		
1	928 351 043 60	brake disc	/L	1	
(1)	928 351 044 60	brake disc	/R	1	
2	928 351 083 03	protective plate	/L	1	
(2)	928 351 084 03	protective plate	/R	1	
3	N 010 227 2	hexagon-head bolt M 7 X 12		8	
4	900 028 019 08	spring washer B 7		8	
5	N 033 167 1	countersunk-head screw M 6 X 12		4	
6	928 351 421 00	fixed calliper without pad	/L	1	
(6)	928 351 422 00	fixed calliper without pad	/R	1	
7	928 351 950 01	expanding spring		2	
8	900 067 154 02	pan-head screw M 12 X 1,5 X 70		4	
9	N 011 564 2	washer		4	
10	E 928 351 939 01	repair kit containing asbestos		1	
(10)	A 928 351 939 02	set of brake pads without asbestos		1	M 475
(10)	993 351 939 01	set of brake pads without asbestos		1	
11	928 351 919 00	repair kit 42 MM		X	
(11)	951 351 919 01	set of seals 36 MM		X	

Pos	Part Number	Name	Remarks	Qty	Model
12	993 351 959 00	repair kit		X	
12A	993 351 959 01	repair kit		X	
13	928 351 971 00	connecting line		2	
14	930 351 919 00	ventilation valve		4	
15	930 351 927 00	dust boot		4	
16	928 612 315 02	warning contact		2	
17	928 612 409 00	clip		6	
18	928 612 531 01	push-on connector	/L	1	
(18)	928 612 531 00	push-on connector	/R	1	
19	000 043 117 00	brake cylinder paste 1 50-g tube		X	
20	928 351 096 18	damping plate 42 MM		4	
21	928 351 096 19	damping plate 36 MM		4	
		- -- E N D -- -			

Pos	Part Number	Name	Remarks	Qty	Model

Model	Year	MG	SG	Illustration	Restrictions	Update	14:42	01.09.2004	PORSCHE	PET	PORSCHE
928	86	6	03	603-00		179					

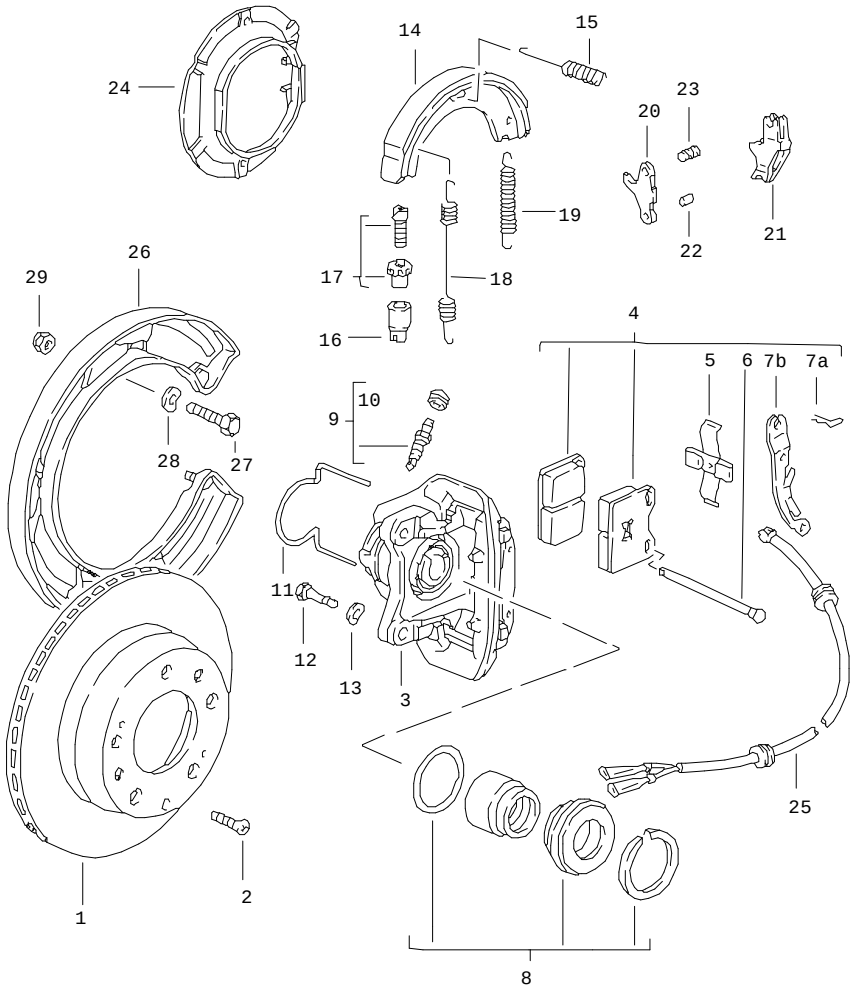

Pos	Part Number	Name	Remarks	Qty	Model
		disc brake rear axle	-85 86		
		use also: mounting parts for brake pad			
1	944 352 041 02	brake disc		2	
2	N 033 167 1	countersunk-head screw M 6 X 12		4	
3	E 928 352 425 01	floating calliper without pad	/L	1	
(3)	E 928 352 426 01	floating calliper without pad	/R	1	
(4)	928 352 951 02	set of brake pads -TEXTAR T 400- without asbestos	/H	1	
-	928 352 953 00	set of fastening parts	/H	1	
5	* 928 352 935 00	expanding spring		2	
6	* 928 352 953 00	set of fastening parts		4	
7A	* 901 351 955 10	safety seal		4	
7B	E 928 352 823 00	cable guide plate		2	
8	* 928 352 941 00	set of seals		2	
9	901 352 977 10	ventilation valve		2	
10	901 351 927 10	dust boot		2	
11	928 352 939 00	guide spring	/L	1	
(11)	928 352 940 00	guide spring	/R	1	
12	900 082 077 02	hexagon-head bolt M 12 X 1,5 X 37		4	
13	900 028 014 02	spring washer B 12		4	
14	996 352 993 00	repair kit		4	
15	928 352 957 02	compression spring		4	
16	911 352 944 00	bush		2	

Pos	Part Number	Name	Remarks	Qty	Model
17	911 352 098 00	adjusting screw		2	
18	901 352 954 10	return spring		2	
19	901 352 932 10	return spring		2	
20	993 352 073 00	push-button lock		2	
21	993 352 073 00	push-button lock		2	
22	993 352 737 00	bolt		2	
23	928 352 447 00	bolt		2	
24	928 352 081 01	supporting plate		2	
25	928 612 313 01	warning contact		2	
-	999 651 165 02	cable clamp		2	
-	113 142 261 A	clip		2	
-	999 651 161 40	cable tie		7	
26	928 352 813 02	protective plate	/L	1	
(26)	928 352 814 02	protective plate	/R	1	
27	900 119 030 02	pan-head screw M 8 X 20		6	
(27)	900 075 057 02	hexagon-head bolt M 6 X 15		2	
28	N 012 241 8	spring washer B 8		6	
(28)	N 012 226 5	spring washer A 6		2	
29	900 910 022 02	lock nut		6	
		- -- E N D -- -			

Pos	Part Number	Name	Remarks	Qty	Model

Model	Year	MG	SG	Illustration	Restrictions	Update	14:43	01.09.2004	PORSCHE	PET	PORSCHE
928	86	6	03	603-01		179					

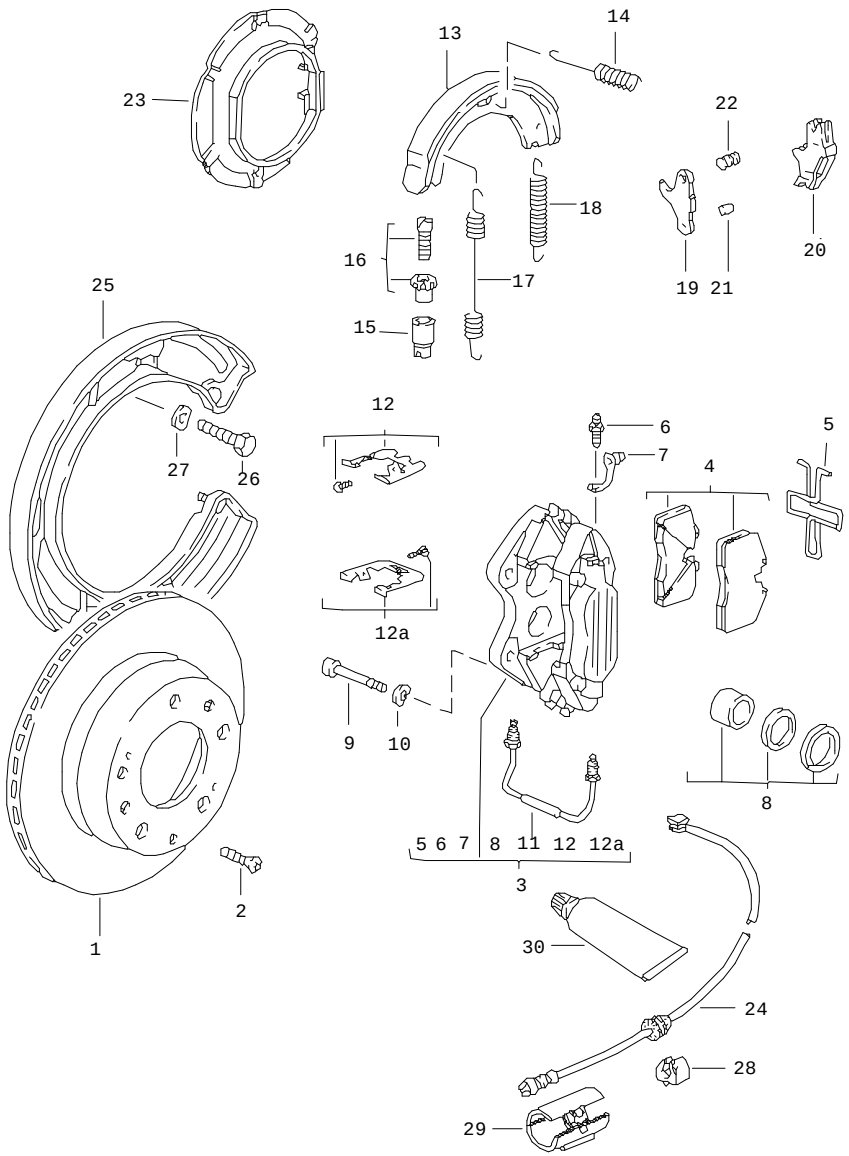

Pos	Part Number	Name	Remarks	Qty	Model
		disc brake rear axle	86		
		use also: mounting parts for brake pad			
1	951 352 041 01	brake disc		2	
2	N 033 167 1	countersunk-head screw M 6 X 12		4	
3	928 352 421 00	fixed calliper	/L	1	
(3)	928 352 422 00	fixed calliper	/R	1	
4	951 351 939 01	set of brake pads containing asbestos		1	
(4) A	951 351 939 02	repair kit without asbestos		1	M 475
(4)	965 352 939 04	set of brake pads without asbestos		1	
5	951 352 950 00	expanding spring		2	
6	930 351 919 00	ventilation valve		2	
7	930 351 927 00	dust boot		2	
8	951 352 919 00	set of seals 30 MM		X	
(8)	951 352 919 01	repair kit 28 MM		X	
9	900 082 077 02	hexagon-head bolt M 12 X 1,5 X 37 X 20		4	
10	900 028 014 02	spring washer B 12		4	
11	951 352 971 00	connecting line		2	
12	993 352 959 00	repair kit		X	
12A	993 352 959 01	repair kit		X	
13	996 352 993 00	repair kit		4	
14	928 352 957 02	compression spring		4	

Pos	Part Number	Name	Remarks	Qty	Model	Pos	Part Number	Name	Remarks	Qty	Model
15	911 352 944 00	bush		2							
16	911 352 098 00	adjusting screw		2							
17	901 352 954 10	return spring		2							
18	901 352 932 10	return spring		2							
19	993 352 073 00	push-button lock		2							
20	993 352 073 00	push-button lock		2							
21	993 352 737 00	bolt		2							
22	928 352 447 00	bolt		2							
23	928 352 081 01	supporting plate		2							
24	928 612 313 02	warning contact		2							
25	928 352 813 03	protective plate	/L	1							
(25)	928 352 814 03	protective plate	/R	1							
26	999 072 005 09	hexagon-head bolt M 6 X 12		6							
27	N 012 226 5	spring washer B 6		6							
28	928 612 409 00	clip		6							
29	928 612 531 01	push-on connector	/L	2							
(29)	928 612 531 00	push-on connector	/R	2							
30	000 043 117 00	brake cylinder paste 1 50-g tube		X							
		- -- E N D -- -									

Model	Year	MG	SG	Illustration	Restrictions	Update	14:43	01.09.2004	PORSCHE	PET	PORSCHE
928	86	6	04	604-00		179					

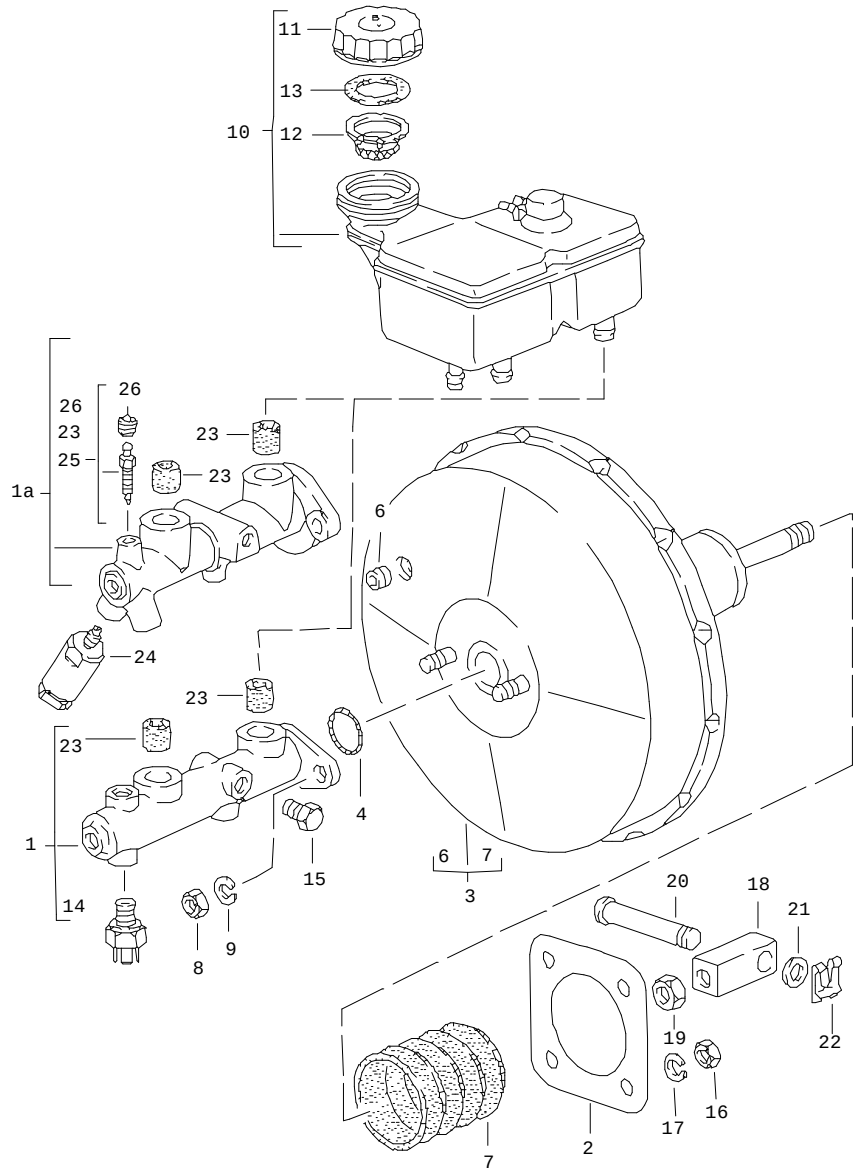

Pos	Part Number	Name	Remarks	Qty	Model
		brake master cylinder brake booster			
1	928 355 011 04	brake master cylinder	-83	1	
1A	928 355 011 23	brake master cylinder	/LL 84 85	1	
(1A)	928 355 011 24	brake master cylinder	/LL 86	1	
(1A) E	927 355 011 23	brake master cylinder	/RL 84 85	1	
(1A)	927 355 011 24	brake master cylinder	/RL 86	1	
(2)	477 611 951	gasket		1	
3	928 355 023 09	vacuum booster	-85	1	
(3)	928 355 023 09	vacuum booster	86	1	
4	251 611 243	sealing ring	-85	1	
6	911 355 921 00	rubber seal		1	
7	477 611 115	bellows		1	
8	999 084 425 02	lock nut M 8		2	
9	900 025 007 02	washer A 8,4		2	
10 A	928 355 650 06	container complete		1	
(10)	928 355 650 06	brake fluid reservoir		1	
-	928 355 654 03	support for container		1	
11	477 611 361	cover		1	
12	211 611 381 B	strainer		1	
13	901 355 908 00	gasket		1	
14	113 945 515 G	stop light switch		2	
15	999 064 018 02	screw plug	/RL -83	1	
16	900 910 022 09	lock nut M 8		4	

Pos	Part Number	Name	Remarks	Qty	Model
17	900 025 007 02	washer A 8,4		4	
18	928 355 509 01	intermediate piece	-85	1	
(18)	928 355 563 01	intermediate piece	86	1	
19	900 034 003 02	hexagon nut M 10		1	
20	928 355 511 00	bolt		1	
21	900 025 009 02	washer A 13		1	
22	N 012 653 1	lock B 9		1	
23	911 355 922 00	plug		2	
24	A 928 355 305 02	brake pressure regulator		1	
24	928 355 305 02	brake pressure regulator		1	
24	928 355 305 02	brake pressure regulator		1	
(24)	951 355 305 01	brake pressure regulator	86	1	
25	928 351 945 03	ventilation valve	84-	1	
26	901 351 927 10	dust boot		1	
		- -- E N D -- -			

Pos	Part Number	Name	Remarks	Qty	Model

Model	Year	MG	SG	Illustration	Restrictions	Update				
928	86	6	04	604-01		179	14:43	01.09.2004	PORSCHE	PET	PORSCHE

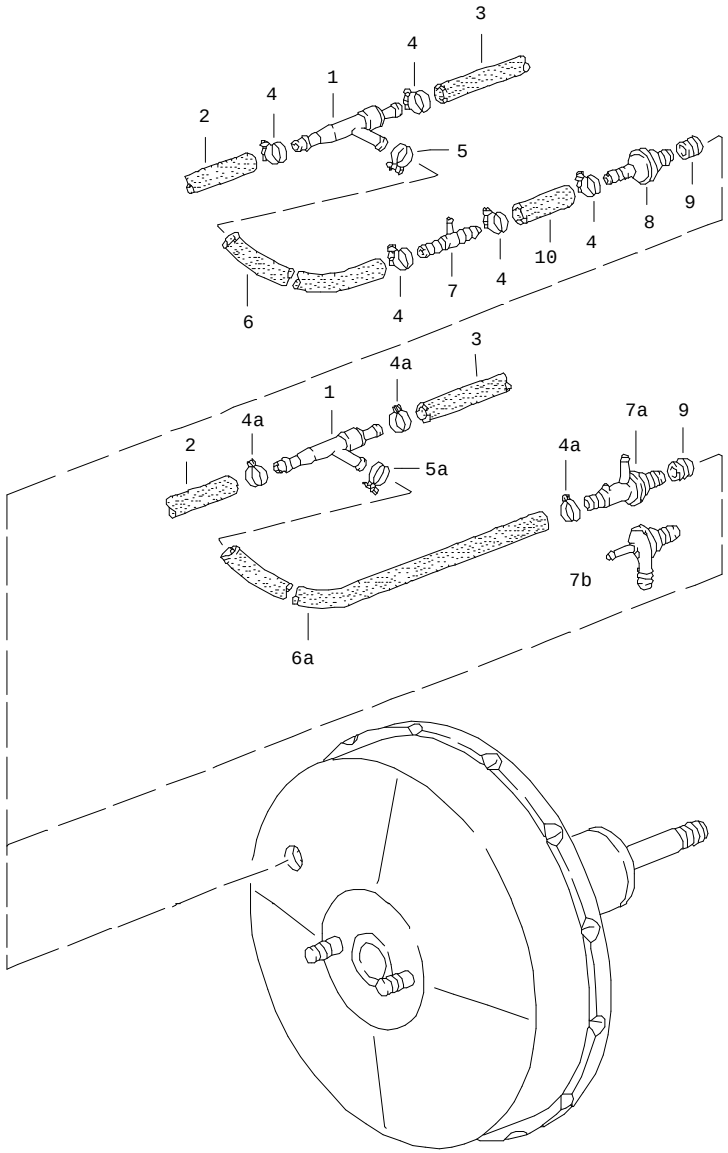

Pos	Part Number	Name	Remarks	Qty	Model
		venturi tube			
		M >> 82D 0608	/LL		M28.11
		M >> 82D 5825	/LL		M28.12
		M >> 82D 5723	(J)		
		M >> 82D 0622	/RL		M28.11
		M >> 82D 5834	/RL		M28.12
1	035 133 753 A	venturi tube		1	
-	928 355 515 00	nozzle		1	
-	999 181 022 51	hose		*	
2	.	50 MM		2	
3	.	560 MM		1	
4	999 512 346 00	hose clamp		7	
5	999 512 045 02	hose clamp		1	
6	928 355 663 00	hose	/LL	1	
(6)	927 355 609 02	hose elbow	/RL	1	
7	321 611 813	t-socket		1	
8	431 611 933	check valve	/LL	1	
(8)	191 611 933 F	check valve	/RL	1	
9	911 355 921 00	rubber seal		1	
-	999 181 022 51	hose		*	
10	.	50 MM	/LL	1	
(10)	.	280 MM	/RL	1	
		venturi tube			
		M 82D 0609 >>	/LL		M28.11
		M 82D 5826 >>	/LL		M28.12
		M 82D 5724 >>	(J)		
		M 82D 0623 >>	/RL		M28.11
		M 82D 5835 >>	/RL		M28.12
					M28.45/46
1	035 133 753 A	venturi tube		1	
-	999 181 022 51	hose		*	
2	.	50 MM		1	

Pos	Part Number	Name	Remarks	Qty	Model
3	.	640 MM 910 MM		1	
-	E 999 137 055 40	angled pipe	/RL	1	M 479
4A	999 512 457 00	clamp		5	
5A	A 999 512 381 02	clamp		1	
5A	999 512 456 00	clamp		1	
6A	928 355 663 02	hose elbow	/LL	1	
(6A)	927 355 609 03	hose elbow	/RL	1	
(6A)	927 355 609 04	hose elbow	/RL	1	M 479
7A	928 355 660 03	check valve	/LL	1	
7B	477 611 933 A	check valve	/RL	1	
9	911 355 921 00	rubber seal		1	
		- -- E N D -- -			

Pos	Part Number	Name	Remarks	Qty	Model

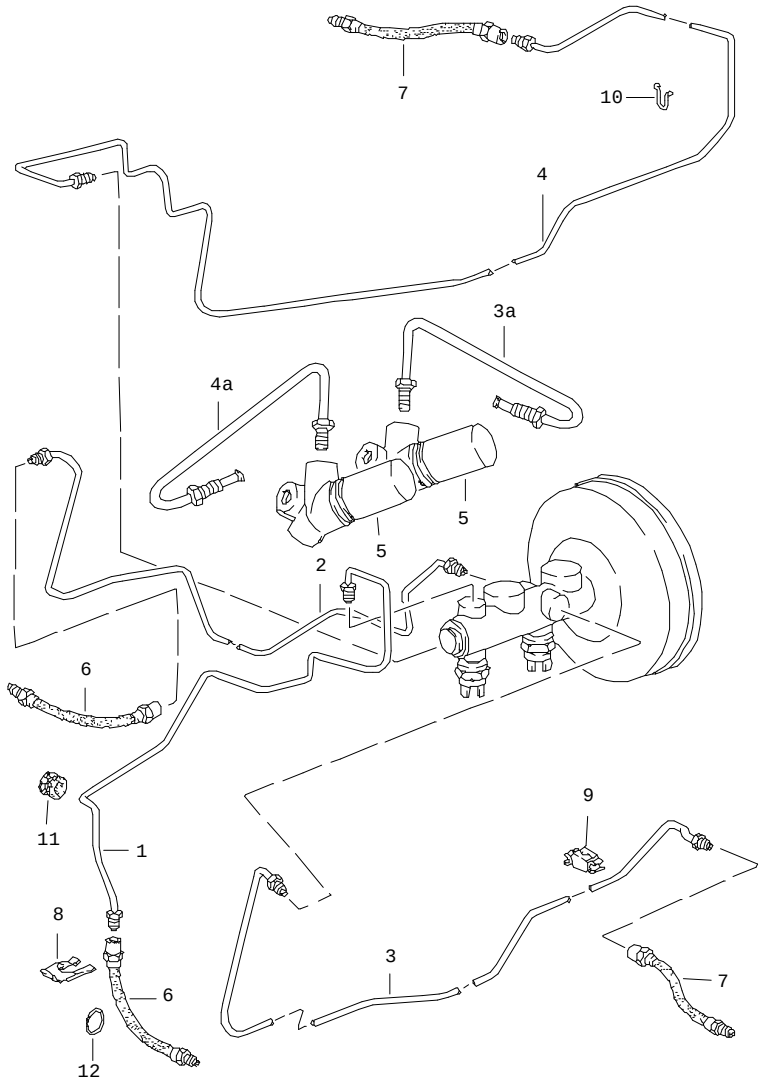

Pos	Part Number	Name	Remarks	Qty	Model
		brake lines	83		
1	928 355 061 04	brake line left front F >>92DS8 41329	/LL	1	
(1)	928 355 061 05	brake line left front F 92DS8 41330>>	/LL	1	
(1)	927 355 061 01	brake line left front F >>92DS8 41329	/RL	1	
(1)	927 355 061 02	brake line left front F 92DS8 41330>>	/RL	1	
2	928 355 062 03	brake line right front F >>92DS8 41329	/LL	1	
(2)	928 355 062 04	brake line right front F 92DS8 41330>>	/LL	1	
(2)	927 355 062 02	brake line right front F >>92DS8 41329	/RL	1	
(2)	927 355 062 03	brake line right front F 92DS8 41330>>	/RL	1	
3	927 355 073 01	brake line left rear		1	
3A	928 355 093 01	brake line left rear	/LL	1	
(3A)	927 355 063 01	brake line left rear	/RL	1	

Pos	Part Number	Name	Remarks	Qty	Model
4	E 927 355 071 01	brake line right rear		1	
(4)	927 355 067 00	brake line right rear	/RL	1	
4A	928 355 092 01	brake line right rear	/LL	1	
(4A)	927 355 069 01	brake line left front	/RL	1	
(4A)	927 355 069 01	brake line right rear	/RL	1	
5	928 355 083 02	brake pressure regulator in pairs exchange		2	
-	900 025 007 02	washer 8,4		2	
-	N 010 237 6	hexagon-head bolt M 8 X 12		2	
-	914 355 667 00	distributor	/RL	1	
-	900 075 017 02	hexagon-head bolt M 6 X 25	/RL	1	
-	N 012 226 5	spring washer B 6	/RL	1	
-	900 076 010 02	hexagon nut M 6	/RL	1	
6	928 355 079 02	brake hose F >>92DS8 41329	/V	2	
(6)	928 355 081 00	brake hose F 92DS8 41330>>	/V	2	
7	928 355 080 02	brake hose	/H	2	
8	113 611 715 A	brake hose bracket		4	
9	477 611 767 B	cable clip		14	
10	999 651 161 40	cable tie		11	
11	999 702 031 50	rubber sleeve		2	
12	999 701 481 40	round seal		12	

- -- E N D -- -

Model	Year	MG	SG	Illustration	Restrictions	Update				
928	86	6	04	604-10		179	14:44	01.09.2004	PORSCHE	PET	PORSCHE

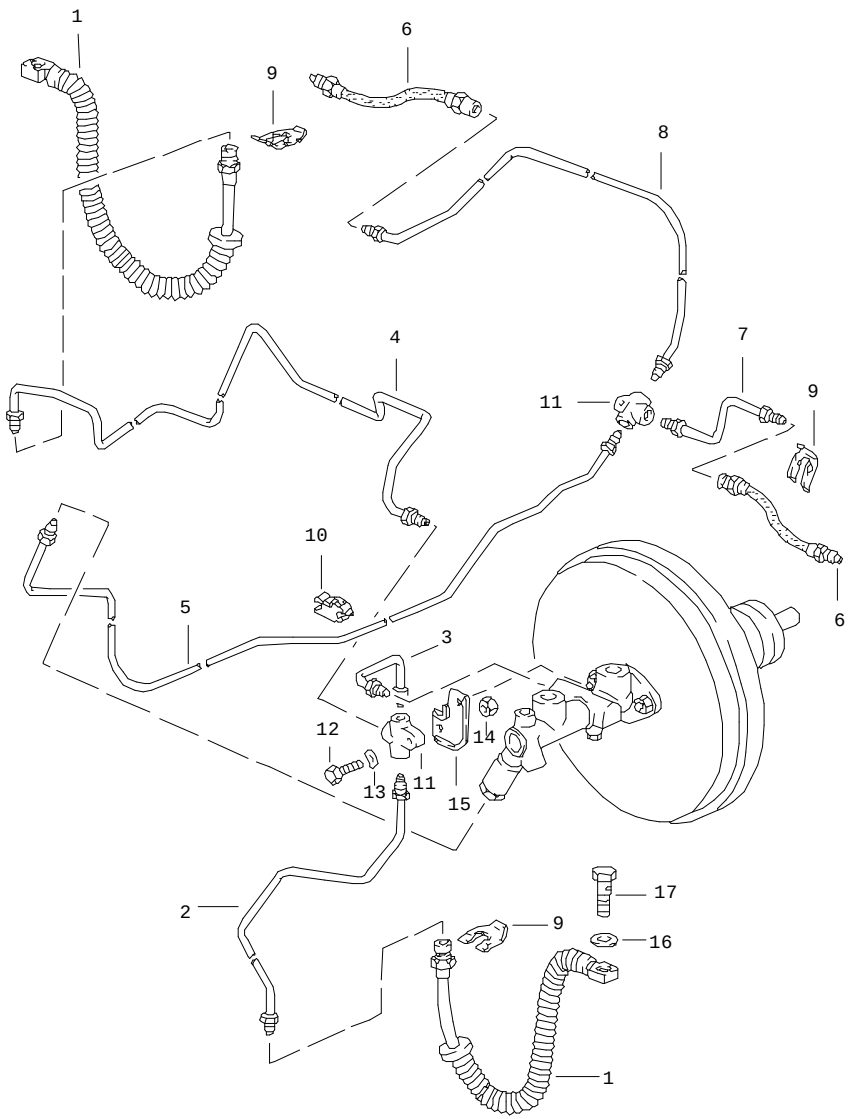

Pos	Part Number	Name	Remarks	Qty	Model
		brake lines	84-		
1	928 355 081 00	brake hose front	-85	2	
(1)	928 355 081 02	brake hose front	86	2	
2	928 355 053 01	brake line left front	/LL	1	
(2)	927 355 053 01	brake line left front	/RL	1	
3	928 355 049 00	brake line	/LL	1	
(3)	927 355 049 00	brake line front	/RL	1	
4	928 355 051 02	brake line front	/LL	1	
(4)	927 355 051 01	brake line front	/RL	1	
5	928 355 055 00	brake line centre		1	
(5)	927 355 055 00	brake line centre	/RL -85	1	
6	928 355 080 02	brake hose rear		2	
7	928 355 057 02	brake line left rear	-85	1	
(7)	928 355 057 04	brake line left rear	86	1	
8	928 355 059 01	brake line right rear	-85	1	
(8)	928 355 059 01	brake line right rear	86	1	
9	113 611 715 A	brake hose bracket		4	

Pos	Part Number	Name	Remarks	Qty	Model
10	477 611 767 B	cable clip	-85	13	
(10)	811 611 797	clip	86	15	
11	914 355 667 00	distributor		4	
12	900 075 017 02	hexagon-head bolt M 6 X 25		2	
13	N 012 226 5	spring washer B 6		2	
14	900 076 010 02	hexagon nut M 6		2	
15	928 355 651 00	support	/LL	1	
(15)	927 355 651 00	support	/RL	1	
16	N 013 806 2	sealing ring A 10 X 14		2	
17	999 134 027 02	banjo bolt M 10 X 1		2	
		- -- E N D -- -			

Pos	Part Number	Name	Remarks	Qty	Model

Model	Year	MG	SG	Illustration	Restrictions	Update	14:45	01.09.2004	PORSCHE	PET	PORSCHE
928	86	6	04	604-15		179					

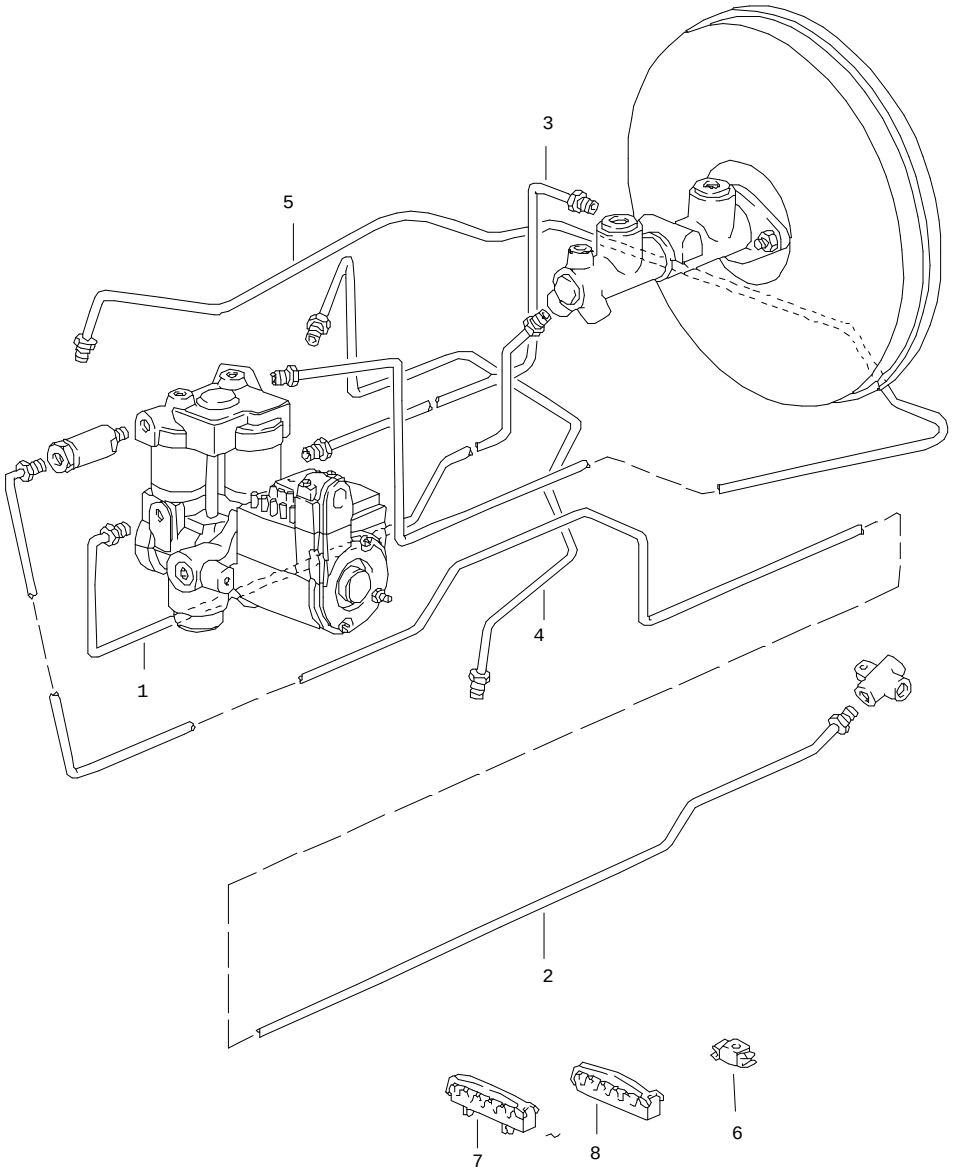

Pos	Part Number	Name	Remarks	Qty	Model
		brake lines anti-lock brake system	84-		
1	928 355 131 00	brake line	/LL	1	
(1)	927 355 131 00	brake line	/RL	1	
2	E 928 355 137 00	brake line	-85	1	
(2)	928 355 137 02	brake line	86	1	
3	928 355 141 00	brake line	/LL	1	
(3)	927 355 141 00	brake line	/RL	1	
4	928 355 147 01	brake line		1	
5	928 355 148 02	brake line	/LL	1	
(5)	927 355 148 01	brake line	/RL	1	
6	477 611 767 B	cable clip	-85	17	
(6)	811 611 797	clip	86	17	
7	928 355 637 00	support		2	
8	928 355 637 01	support		1	
		- -- E N D -- -			

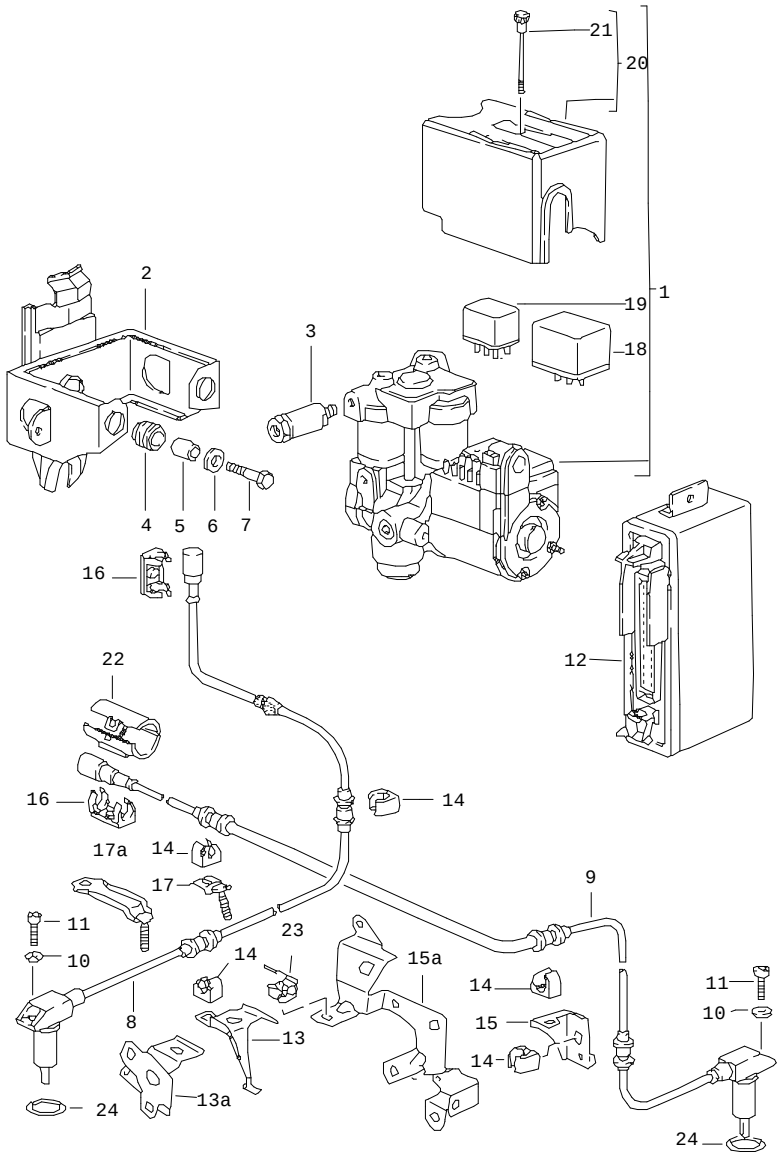

Pos	Part Number	Name	Remarks	Qty	Model
		anti-lock brake system hydraulic unit speed sensor control unit	84-		
1	928 355 755 04	hydraulic unit		1	
2	928 355 041 02	support		1	M28.21/22
3	A 928 355 305 02	brake pressure regulator	84 85-	1	
3	928 355 305 02	brake pressure regulator		1	
(3)	951 355 305 01	brake pressure regulator	86	1	
4	928 355 635 00	rubber mounting		3	
5	928 355 633 00	bush		3	
6	N 011 666 7	washer B 6,4		3	
7	N 010 219 2	hexagon-head bolt M 6 X 28		3	
8	928 606 404 00	speed sensor	/V -85	2	
(8)	928 606 404 02	speed sensor	/V 86	2	
9	928 606 402 00	speed sensor	/H -85	2	
(9)	928 606 402 01	speed sensor	/H 86	2	
(10)	928 341 393 00	washer	-85	4	
11	N 014 744 1	pan-head screw M 6 X 32	/V -85	2	
(11)	N 014 740 2	pan-head screw M 6 X 16	/V 86	2	
(11)	N 014 743 2	pan-head screw M 6 X 30	/H 86	2	
12	928 618 119 02	control unit	-85	1	
(12)	928 618 118 00	control unit	86	1	
-	927 618 073 00	bracket control unit left	/RL	1	

Model	Year	MG	SG	Illustration	Restrictions	Update				
928	86	6	04	604-20		179	14:45	01.09.2004	PORSCHE	PET	PORSCHE

Pos	Part Number	Name	Remarks	Qty	Model	Pos	Part Number	Name	Remarks	Qty	Model
-	927 618 074 00	bracket control unit right	/RL	1							
13	928 341 107 04	support	/L -85	1							
(13)	928 341 108 04	support	/R -85	1							
13A	928 341 239 00	support	/L 86	1							
(13A)	928 341 240 00	support	/R 86	1							
14	999 651 202 40	cable holder	-85	5							
(14)	928 612 409 00	clip	86	X							
15	E 928 331 225 03	support	/L -85	1							
(15)	928 331 226 03	support	/R -85	1							
(15A)	928 331 239 00	support	/L 86	1							
(15A)	928 331 240 00	support	/R 86	1							
16	999 651 203 40	cable holder	-85	2							
17	928 331 099 00	support	-85	2							
17A	928 331 099 01	support	86	2							
18	928 618 930 00	relay		1							
19	928 618 931 00	relay		1							
20	928 355 960 00	cap		1							
21	928 355 961 00	knurled screw		1							
22	928 612 531 01	push-on connector	/L 86	1							
(22)	928 612 531 00	push-on connector	/R 86	1							
23	928 612 529 01	clip	86	4							
24	900 174 032 40	round seal	86	4							
		- -- E N D -- -									

Model	Year	MG	SG	Illustration	Restrictions	Update		
928	86	6	98	REP		179	15:30	01.09.2004

Pos	Part Number	Name	Remarks	Qty	Model
		repair kits use also: mounting parts for brake pad			
>>	> 928 351 931 01	set of brake pads (JURID 226/238) comprising: brake pad inner brake pad outer	/V -85	1 2 2	
>>	> 928 351 931 01	set of brake pads without asbestos (TEXTAR T 400) comprising: brake pad inner brake pad outer	/V -85	1 2 2	
>>	> 928 351 939 01	repair kit (JURID 238) comprising: brake pad	/V 86	1 4	
>>	> 993 351 939 01	set of brake pads without asbestos (TEXTAR T 428 FF) comprising: brake pad	/V 86	1 4	
>>	> 928 351 943 00	gasket set comprising: protection cap gasket	/V -85	2 1 1	
>>	> 928 351 919 00	repair kit comprising: piston boot inner boot outer 42 MM	/V 86	2 1 1 1	
>>	> 951 351 919 01	set of seals comprising: piston boot inner boot outer 36 MM	/V 86	2 1 1 1	

Model	Year	MG	SG	Illustration	Restrictions	Update		
928	86	6	98	REP		179	15:30	01.09.2004

Pos	Part Number	Name	Remarks	Qty	Model
>>	> 993 351 959 00	repair kit comprising: spring plate screw lower	/V 86	2 1 2	
>>	> 993 351 959 01	repair kit comprising: spring plate screw upper	/V 86	2 1 2	
-	928 351 949 00	set of damping sleeves 1 set for floating calliper	/V -85	2	
>>	> 928 352 951 02	set of brake pads comprising: brake pad with mounting warning contact	/H -85	1 4	
>>	> 928 352 951 02	set of brake pads (JURID 226/238) comprising: brake pad with mounting warning contact	/H -85	1 4	
>>	> 928 352 953 00	set of fastening parts comprising:	/H	1	
-	E 928 352 823 00	cable guide plate		2	
-	928 352 935 00	expanding spring		2	
-	928 352 953 00	set of fastening parts		4	
-	901 351 955 10	safety seal		1	
>>	> 951 351 939 01	set of brake pads (JURID 238) comprising: brake pad	/H 86	1 4	
>>	> 951 352 919 00	set of seals comprising: piston boot inner boot outer 30 MM	/H 86	2 1 1 1	

Model	Year	MG	SG	Illustration	Restrictions	Update		
928	86	6	98	REP		179	15:30	01.09.2004

Pos	Part Number	Name	Remarks	Qty	Model
>>	> 951 352 919 01	repair kit	/H 86	2	
		comprising:			
		piston		1	
		boot		1	
		inner			
		boot		1	
		outer			
		28 MM			
>>	> 993 352 959 00	repair kit	/H 86	2	
		comprising:			
		spring plate		1	
		upper			
		screw		2	
>>	> 993 352 959 01	repair kit	/H 86	2	
		comprising:			
		spring plate		1	
		lower			
		screw		2	
		- -- E N D -- -			

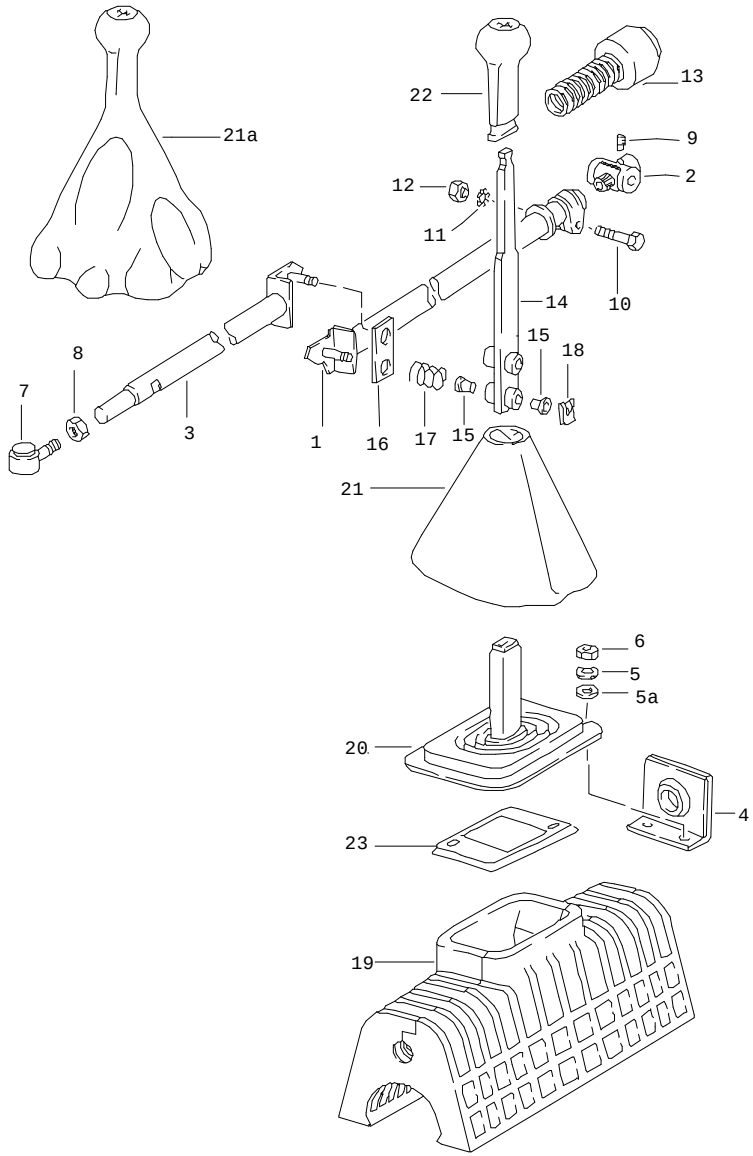

Pos	Part Number	Name	Remarks	Qty	Model
		shift mechanism manual transmission			
1	928 424 028 18	gear shift rod	-84	1	
(1)	928 424 028 19	gear shift rod	85-	1	
2	928 424 029 00	bearing body		1	
3	E 928 424 009 08	guide tube	-84	1	
(3)	928 424 009 10	guide tube	85-	1	
4	928 424 017 05	bearing bracket		1	
5A	999 523 104 02	lock washer 6 PN	85-	2	
5	N 011 524 7	washer B 6,4	-84	2	
6	900 076 010 02	hexagon nut M 6		2	
7	928 424 005 01	angular joint		1	
8	900 034 003 02	hexagon nut M 10		1	
9	928 424 229 00	conical screw		1	
10	N 040 222 2	hexagon-head bolt M 8 X 32		1	
11	999 523 102 02	lock washer		1	
12	900 076 025 02	hexagon nut M 8		1	
13	928 424 209 00	bellows	-84	1	
(13)	928 424 209 01	bellows	85-	1	
14	928 424 067 08	gearshift lever	/LL -84	1	
(14)	928 424 067 11	gearshift lever	/LL 85-	1	
(14)	927 424 067 00	gearshift lever	/RL	1	
15	999 924 002 40	plain bearing		4	
16	928 424 149 01	connecting piece	-84	1	
(16)	928 424 149 02	connecting piece	85-	1	

Pos	Part Number	Name	Remarks	Qty	Model
17	928 424 147 03	compression spring		2	
18	999 166 034 02	sl-lock B 8	-84	2	
(18)	900 234 510 02	support washer S 10 X 16	85-	2	
19	928 424 182 03	sound absorber		1	
20	928 424 181 03	sleeve	-84	1	
(20)	928 424 181 04	sleeve	85-	1	
-	477 711 257	rubber ring		1	
21A	928 424 073 01	gearshift knob with leather bellows	-84	1	
	1AJ	black			
	4RB	brown			
	7LD	burgundy			
	30B	blue			
(21A)	928 424 073 03	head shift rod with leather bellows	85-	1	
	1AJ	black			
	4RB	brown			
	7LD	burgundy			
	30B	blue			
	6JD	dark green			
	5JX	greyish green			
23	928 552 017 00	frame		1	
		- -- E N D -- -			

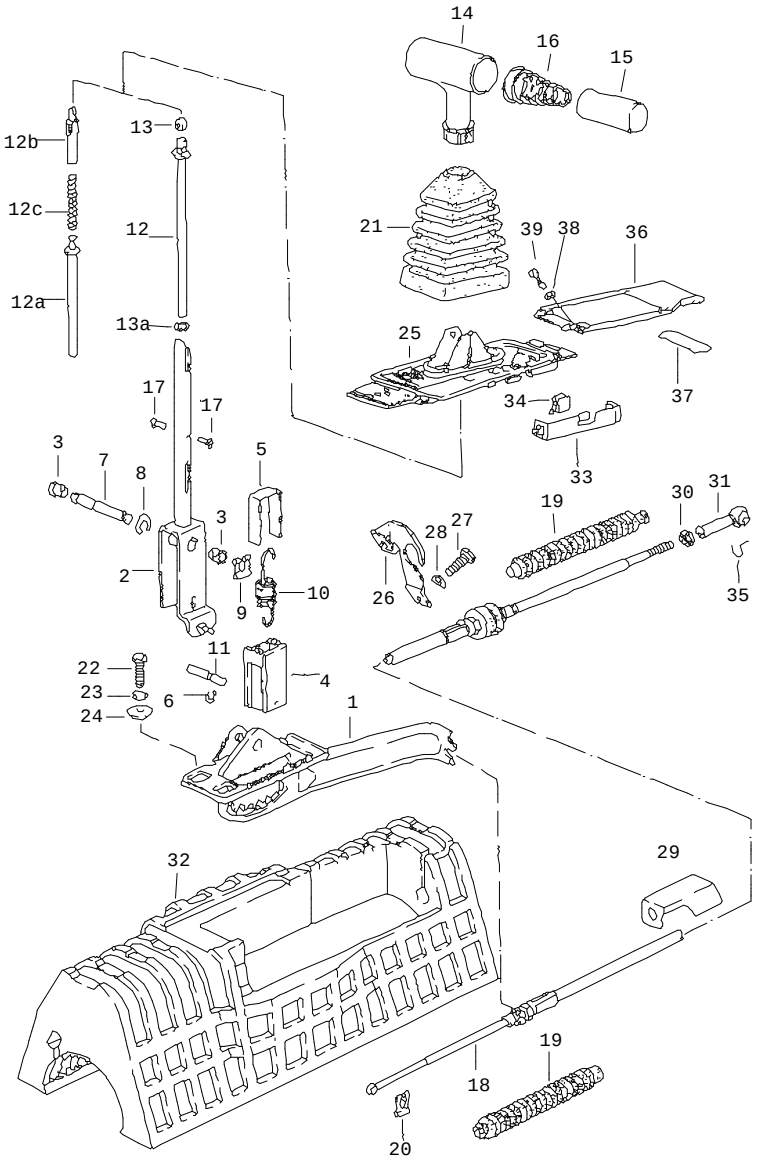

Pos	Part Number	Name	Remarks	Qty	Model
		shift mechanism for cars with automatic transmission			
1	922 424 031 02	support	-84	1	
(1)	928 426 031 00	support	85-	1	
2	922 424 061 01	selector lever	-84	1	
(2)	928 426 261 01	selector lever	85-	1	
3	999 924 001 40	bush		2	
4	922 424 172 00	locking piece		1	
5	922 424 171 00	clip	-84	1	
(5)	922 424 171 01	clip	85-	1	
6	999 166 040 02	kl-lock		1	
7	922 424 166 03	pin	-84	1	
(7)	928 426 166 00	pin	85-	1	
9	999 166 005 02	sl-lock		1	
10	922 424 168 01	tension spring	-84	1	
(10)	928 426 168 01	tension spring	85-	1	
11	922 424 167 01	straight pin		1	
12	922 424 170 03	push rod	-84	1	
12A	928 426 293 01	push rod	85-	1	
12B	928 426 271 01	guide	85-	1	
12C	999 521 037 01	compression spring	85-	1	
13	321 713 137	roller		1	
13A	999 701 608 40	round seal 5 X 2 B		2	
14	928 426 077 00	selector knob	-84	1	
	1AJ	black			
(14)	928 426 075 01	selector knob	/LL 85-	1	
	1AJ	black			

Pos	Part Number	Name	Remarks	Qty	Model
	30B	blue			
	4RB	brown			
	7LD	burgundy			
	6JD	dark green			
	5JX	greyish green			
(14)	927 426 075 01	selector knob	/RL 85-	1	
	1AJ	black			
	30B	blue			
	4RB	brown			
	7LD	burgundy			
	6JD	dark green			
	5JX	greyish green			
15	928 426 174 01	adjusting lever	-84	1	
(15)	E 928 426 275 01	adjusting lever	85-	1	
16	922 424 176 03	compression spring		1	
-	922 424 201 00	concave washer	-84	1	
-	922 424 203 00	concave washer	-84	1	
17	N 033 165 1	countersunk-head screw M 4 X 8	-84	2	
(17)	N 014 121 6	oval-head screw M 4 X 6	85-	2	
18	922 424 033 01	cable 3 speed		1	
18	928 426 033 03	cable 4-speed		1	
19	922 424 103 00	bellows		2	
20	N 012 644 1	lock		1	
21	928 426 139 00	bellows		1	
22	900 075 057 02	hexagon-head bolt M 6 X 16		3	
23	N 012 226 5	spring washer 3 speed		3	
23	N 011 524 11	washer A 6,4 4-speed	-84	3	
24	N 011 550 1	washer B 6,5		3	
25	A 927 552 091 03	frame	/RL -83	1	
(25)	927 552 091 03	frame	/RL	1	
(25)	927 552 091 20	frame	/RL 84-	1	
(25)	928 552 091 04	frame 3 speed	/LL	1	
(25)	928 552 091 20	frame 4-speed		1	
26	922 424 101 01	retaining bracket 3 speed		1	
(26)	928 426 111 02	retaining bracket 4-speed		1	
27	N 010 237 6	hexagon-head bolt M 8 X 12 3 speed		2	
27	N 010 240 7	hexagon-head bolt M 8 X 20 4-speed	-84	2	
(27)	N 010 237 6	hexagon-head bolt M 8 X 12	85-	2	
28	N 012 241 8	spring washer B 8		2	
29	922 424 193 00	supporting plate 3 speed		1	
30	N 011 005 14	hexagon nut M 5		1	
31	911 423 147 00	ball socket		1	
32	922 424 182 00	sound absorber		1	
33	E 922 424 191 00	bracket	-84	1	

Pos	Part Number	Name	Remarks	Qty	Model	Pos	Part Number	Name	Remarks	Qty	Model
34	999 591 462 02	clamp	-84	2							
35	E 900 169 014 02	securing clip		1							
36	928 552 181 02	mounting		1							
37	928 552 317 02	separator for mounting		1							
38	900 114 015 01	shake-proof washer A 3,7		2							
39	900 146 032 02	oval-head screw AM 3,5 X 10		2							
		- -- E N D -- -									

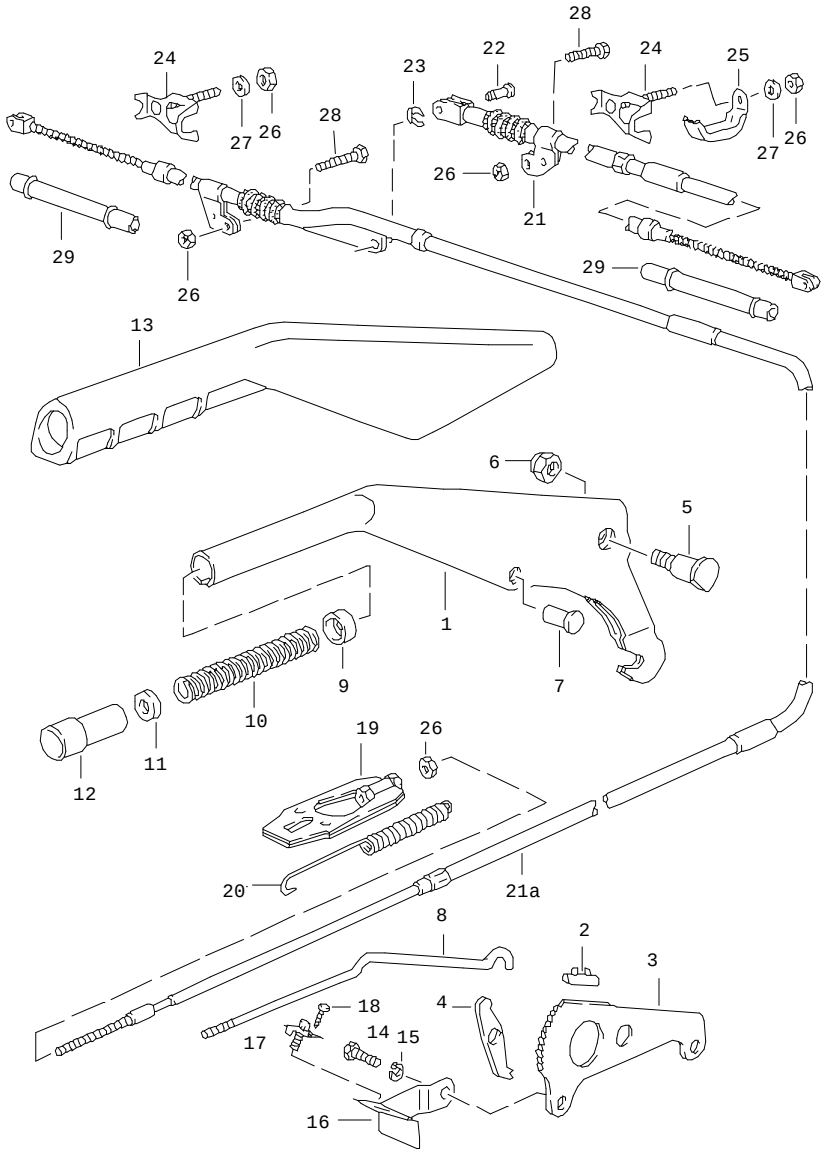

Pos	Part Number	Name	Remarks	Qty	Model
		actuator handbrake			
1	928 424 253 13	parking-brake lever		1	
2	901 424 509 01	stop		1	
3	928 424 541 14	locking segment		1	
4	928 424 508 00	pawl		1	
5	928 424 527 00	pin		1	
6	900 084 004 02	hexagon nut		1	
7	900 120 040 02	rivet		1	
8	928 424 255 12	push rod		1	
9	914 424 258 00	guide sleeve		1	
10	901 424 543 00	compression spring		1	
11	901 424 593 01	rubber ring		1	
12	928 424 523 12	push button		1	
13	928 424 259 00	parking-brake lever		1	
14	N 010 239 11	hexagon-head bolt M 8 X 18		2	
15	900 027 015 02	lock ring B 8		2	
16	928 424 535 00	support	/LL	1	
(16)	927 424 535 00	support	/RL	1	
17	968 613 601 00	contact switch		1	
18	N 013 957 5	tapping screw B 3,5 X 9,5		1	
19	928 424 033 00	connecting piece		1	
20	477 711 975	return spring		1	
21	928 424 551 16	parking-brake cable	/L	1	
21A	928 424 552 16	parking-brake cable	/R	1	
22	999 166 048 02	bolt A 6 X 17 X 14		1	

Pos	Part Number	Name	Remarks	Qty	Model
23	N 012 645 2	lock		1	
24	928 424 045 00	support		1	
25	928 424 423 01	support		1	
26	900 910 010 09	lock nut		5	
27	N 011 524 7	washer A 6,4		2	
28	900 074 111 02	hexagon-head bolt M 6 X 50		2	
(28)	900 075 343 02	hexagon-head bolt M 6 X 45		2	M 249
29	928 424 405 01	guide tube		2	
		- -- E N D -- -			

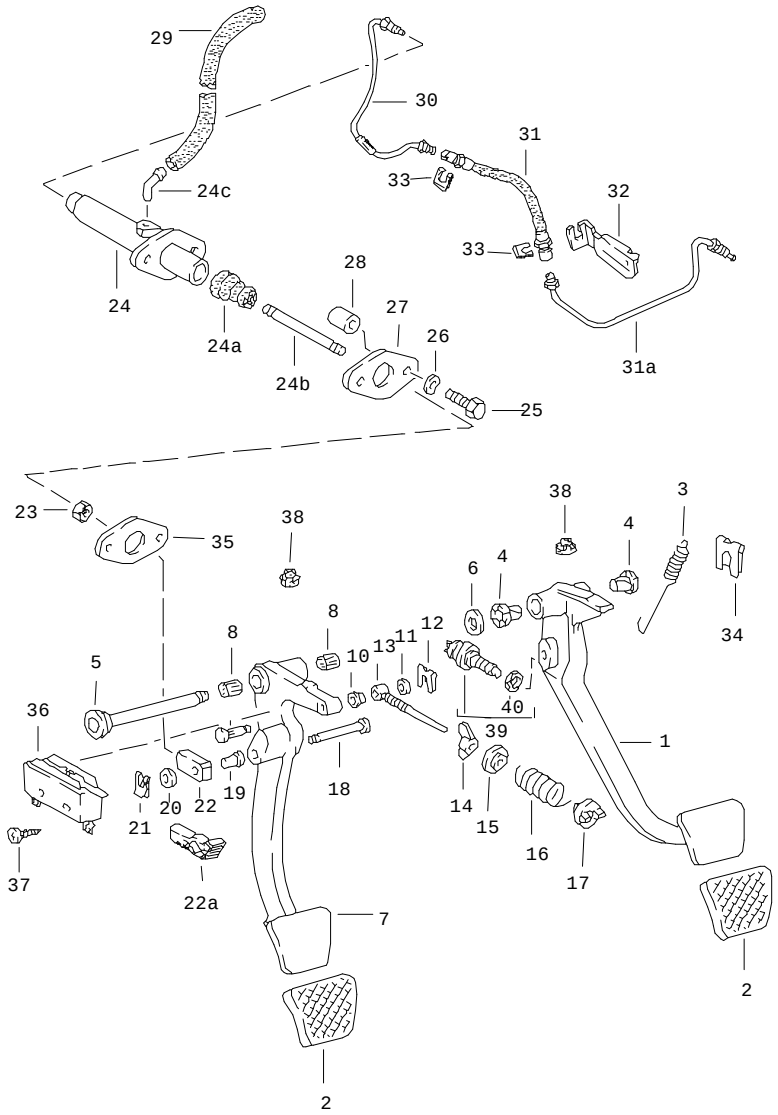

Pos	Part Number	Name	Remarks	Qty	Model
		pedals			
1	928 423 501 05	brake pedal	/LL	1	
(1)	927 423 501 07	brake pedal	/RL	1	
(1)	928 423 515 01	brake pedal	/LL	1	M 249
(1)	927 423 501 08	brake pedal	/RL	1	M 249
2	928 423 210 03	rubber pad		2	
(2)	928 423 211 00	cap		1	M 249
3	928 423 531 03	return spring		1	
4	928 423 542 00	bearing sleeve		2	
5	928 423 037 02	shaft		1	
-	928 423 523 00	spacer sleeve		1	M 249
6	N 011 565 3	washer		2	
7	927 423 311 01	clutch pedal	/RL	1	
7	928 423 311 06	clutch pedal	/LL	1	
8	900 317 001 00	needle-roller bearing		2	
9	928 423 355 00	bolt		1	
10	999 924 001 40	bush		1	
11	900 089 006 02	washer A 8,4		1	
12	N 900 470 01	lock washer		1	
13	928 423 349 01	guiding rod		1	
14	E 999 044 001 02	winged nut M 8		1	
15	928 423 353 00	concave washer		1	
16	928 423 357 04	clutch power spring		1	
17	928 423 351 00	knife-edge bearing		1	
18	928 423 513 00	bolt	/LL	1	
19	999 924 002 40	plain bearing	/LL	1	

Pos	Part Number	Name	Remarks	Qty	Model
20	900 025 008 09	washer A 10,5	/LL /LL	1	
21	999 166 034 02	sl-lock	/LL	1	
22	928 423 517 00	clevis	/LL	1	
22A	999 168 017 40	ball socket	/RL	1	
23	900 076 025 02	hexagon nut M 8		1	
24	928 423 173 06	clutch master cylinder	/LL	1	
24	927 423 173 02	clutch master cylinder	/RL	1	
24A	928 423 908 00	bellows		1	
24B	928 423 187 00	piston rod	/LL	1	
(24B)	927 423 187 01	piston rod	/RL	1	
24C	477 721 177	elbow		1	
25	N 010 340 4	hexagon-head bolt M 8 X 40		2	
26	N 012 241 8	spring washer B 8		2	
27	928 423 521 00	cover plate		1	
28	928 423 519 00	spacer tube		2	
-	999 181 021 50	hose		*	
29	-	375 MM		1	
30	928 423 197 01	clutch tube	/LL	1	
(30)	927 423 185 01	clutch tube	/RL	1	
31	928 423 177 03	clutch hose	/LL	1	
(31)	928 423 177 01	clutch hose	/RL	1	
31A	928 423 199 02	clutch tube	/LL	1	
32	928 423 189 01	bump stop	/LL	1	
-	N 011 010 6	hexagon nut M 10		1	
(32)	927 423 189 00	support	/RL	1	
33	928 423 183 01	hose holder	/LL	2	
33	928 423 183 01	hose holder	/RL	1	
34	N 012 654 1	lock		1	
35	928 423 191 00	gasket		1	
36	928 613 413 01	microswitch		1	
37	900 143 013 02	oval-head sheetmetal screw B 2,9 X 16		2	
38	999 703 183 40	buffer		2	
39	477 945 515	stop light switch	84-	1	
40	481 945 529	nut M 12 X 1 vertical pedal adjustment brake pedal clutch pedal 15 MM	84-	1	
-	928 423 207 00	spacer plate		2	
-	E 928 423 213 00	spacer plate		1	M 249
-	900 067 057 02	pan-head screw M 8 X 20		2	
-	N 042 131 1	shake-proof washer see technical information GR. X NR. 15 vertical pedal adjustment brake pedal clutch pedal 30 MM		2	
-	928 423 207 00	spacer plate		4	
-	E 928 423 213 00	spacer plate		2	M 249
-	900 067 081 02	pan-head screw M 8 X 35		2	
-	N 042 131 1	shake-proof washer see technical information GR. X NR. 15		2	
		- -- E N D -- -			

Model	Year	MG	SG	Illustration	Restrictions	Update				
928	86	7	02	702-05		179	14:47	01.09.2004	PORSCHE	PET	PORSCHE

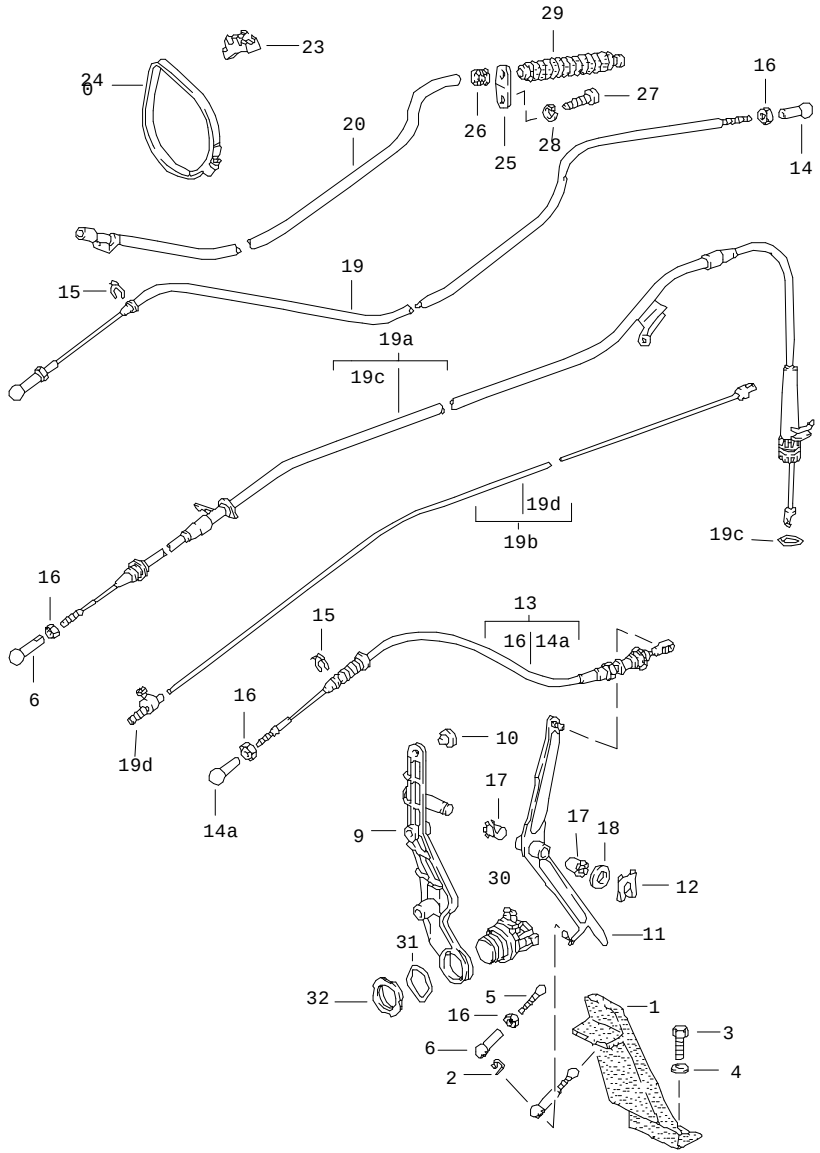

Pos	Part Number	Name	Remarks	Qty	Model
		accelerator control left-hand drive			
1	911 423 111 02	accelerator pedal		1	
2	E 900 169 014 02	securing clip		1	
3	999 072 005 09	hexagon-head bolt M 6 X 12		2	
4	N 011 666 7	washer B 6,4		2	
5	928 423 119 00	push rod		1	
6	911 423 147 00	ball socket		1	
9	928 423 021 03	bearing bracket	86	1	
-	900 076 010 02	hexagon nut M 6		2	
-	N 012 226 5	spring washer B 6		2	
10	999 703 183 40	buffer		1	
11	928 423 250 05	reverse lever		1	
12	999 166 034 02	sl-lock		1	
13	A 928 423 023 06	accelerator cable	83	1	
13	928 423 023 06	accelerator cable		1	
(13)	928 423 023 04	accelerator cable	85-	1	M28.43/44 M28.45/46
14	N 015 521 3	ball socket		2	M 249
14A	911 423 147 00	ball socket	-84	1	
(14A)	E N 015 525 1	ball socket	85-	1	
15	999 166 046 02	lock		2	
16	N 011 005 14	hexagon nut BM 5		3	
17	999 924 002 40	plain bearing		2	
18	900 025 008 09	washer A 10,5		1	

Pos	Part Number	Name	Remarks	Qty	Model
19	928 423 071 03	cable control pressure 3 speed		1	M 249
19A	928 423 041 01	cable control pressure 4-speed		1	M 249 M28.20/22
19B	928 423 901 00	cable control pressure 4-speed		1	M 249 M28.20/22
(19A)	928 423 041 02	cable control pressure 4-speed		1	M 249 M28.44/46
(19A)	928 423 901 01	cable control pressure 4-speed		1	M 249 M28.44/46
19C	999 701 664 40	sealing ring		1	
19D	477 723 601	nipple		1	
20	928 423 073 01	guide tube 3 speed		1	M 249
23	928 423 141 00	support		2	M 249
24	999 512 355 02	hose clamp		2	M 249
25	928 423 143 00	support		1	M 249
26	999 702 119 50	rubber sleeve		1	M 249
27	N 010 237 6	hexagon-head bolt M 8 X 12 3 speed		1	M 249
27	N 010 210 13	hexagon-head bolt M 6 X 10 4-speed		1	
28	900 027 015 02	lock ring B 8 3 speed		1	M 249
28	N 011 524 7	washer A 6,4 4-speed		1	
29	928 423 277 00	sealing sleeve		1	M 249
30	928 606 111 00	kickdown switch		1	M 249
31	928 613 419 00	spring washer		1	M 249
32	928 613 421 00	grooved nut M 28 X 1,5		1	M 249
		vertical pedal adjustment 15 MM			
-	928 423 133 04	bump stop		1	
-	928 423 119 01	push rod	/LL	1	
-	927 423 119 01	push rod	/RL	1	
-	911 423 147 00	ball socket		1	
-	N 011 005 14	hexagon nut M 5		1	
-	E 928 423 117 03	stop		1	
-	928 423 025 00	bump stop		1	
		vertical pedal adjustment 30 MM			
-	928 423 133 05	bump stop		1	
-	928 423 119 02	push rod	/LL	1	
-	927 423 119 01	push rod	/RL	1	
-	911 423 147 00	ball socket		1	
-	N 011 005 14	hexagon nut M 5		1	
		see technical information GR.X NR.15			
		- -- E N D -- -			

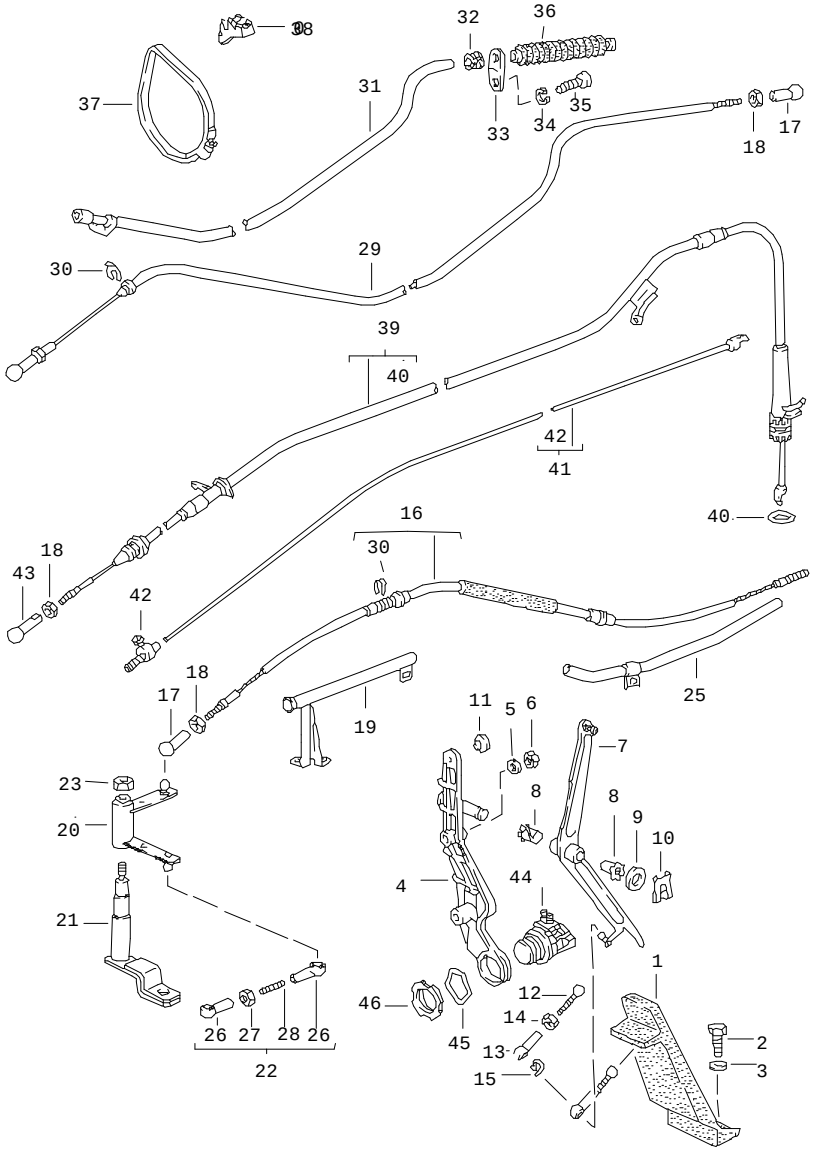

Pos	Part Number	Name	Remarks	Qty	Model
		accelerator control right-hand drive			
1	911 423 111 02	accelerator pedal		1	
2	999 072 005 09	hexagon-head bolt M 6 X 12		2	
3	N 011 666 7	washer B 6,4		2	
4	927 423 129 03	bearing bracket		1	
5	900 076 025 02	hexagon nut M 8		2	
6	N 012 241 8	spring washer B 8		2	
7	927 423 250 02	reverse lever		1	
8	999 924 002 40	plain bearing		2	
9	900 025 008 09	washer A 10,5		1	
10	999 166 034 02	sl-lock		2	
11	999 703 183 40	buffer		2	
12	927 423 119 00	push rod		1	
13	911 423 147 00	ball socket		3	
14	N 011 005 14	hexagon nut M 5		1	
15	E 900 169 014 02	securing clip		1	
16	927 423 023 02	accelerator cable	-83	1	
(16)	927 423 023 03	accelerator cable	84-	1	M28.21/22
(16)	927 423 023 04	accelerator cable	86	1	M28.45/46
17	U N 015 521 3	ball socket		2	
18	900 034 006 02	hexagon nut BM 5		2	
19	927 423 121 01	guide tube	-83	1	
(19)	927 423 121 02	guide tube	84-	1	

Pos	Part Number	Name	Remarks	Qty	Model
20	927 423 131 00	reverse lever		1	
21	927 423 133 00	support	-83	1	
(21)	927 423 135 00	bracket	84-	1	
		connecting rod		1	
23	900 910 010 09	lock nut M 6		1	
25	927 423 025 02	guide tube	-83	1	
(25)	927 423 025 03	guide tube	84-	1	
26	N 015 521 3	ball socket		1	
27	900 034 006 02	hexagon nut M 5		1	
28	900 402 001 02	threaded bolt BM 5 X 25	-83	1	
(28)	E 900 402 002 02	threaded bolt BM 5 X 32	84-	1	
29	928 423 071 03	cable control pressure 3 speed		1	M 249
30	999 166 046 02	lock		1	M 249
31	928 423 073 01	guide tube 3 speed		1	M 249
32	999 702 119 50	rubber sleeve		1	M 249
33	928 423 143 00	support		1	M 249
34	900 027 015 02	lock ring B 8 3 speed		1	M 249
(34)	N 011 524 7	washer A 6,4 4-speed		1	M 249
35	N 010 237 6	hexagon-head bolt M 8 X 12 3 speed		1	M 249
(35)	N 010 210 13	hexagon-head bolt M 6 X 10 4-speed		1	M 249
36	928 423 077 07	clutch hose		1	M 249
37	999 512 355 02	hose clamp		2	M 249
38	928 423 141 00	support		2	M 249
39	928 423 041 01	cable control pressure 4-speed		1	M 249 M28.22
(39)	928 423 041 02	cable control pressure 4-speed		1	M 249 M28.44
40	999 701 664 40	sealing ring		1	
41	928 423 901 00	cable control pressure 4-speed		1	M 249 M28.22
(41)	928 423 901 01	cable control pressure 4-speed		1	M 249 M28.44
42	477 723 601	nipple		1	
43	911 423 147 00	ball socket		1	
44	928 606 111 00	kickdown switch		1	M 249
45	928 613 419 00	spring washer		1	M 249
46	928 613 421 00	grooved nut		1	M 249
		vertical pedal adjustment 15 MM			
-	928 423 133 04	bump stop		1	
-	927 423 119 01	push rod		1	
-	911 423 147 00	ball socket		1	
-	N 011 005 14	hexagon nut M 5		1	
		vertical pedal adjustment 30 MM			
-	928 423 133 05	bump stop		1	
-	927 423 119 01	push rod		1	
-	911 423 147 00	ball socket		1	

Pos	Part Number	Name	Remarks	Qty	Model	Pos	Part Number	Name	Remarks	Qty	Model
-	N 011 005 14	hexagon nut M 5		1							
		- -- E N D -- -									

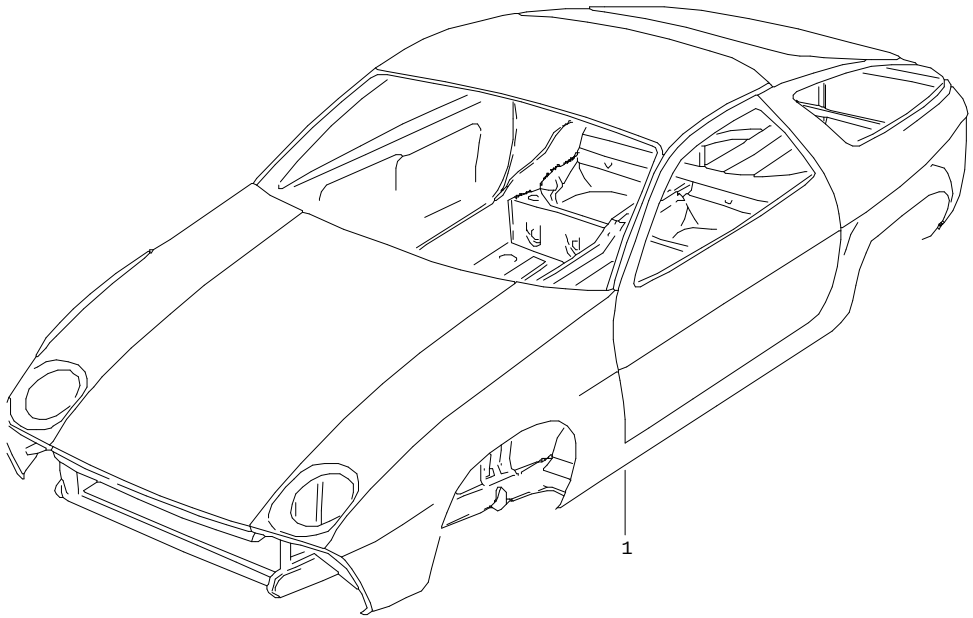

Pos	Part Number	Name	Remarks	Qty	Model
		body in white prime coated sealed underbody protection sprayed with filler bodyshells can only be delivered of the current model year			
1	E 928 500 901 02	body in white	/LL	1	
(1)	E 928 500 901 03	body in white	/LL	1	AUT.
(1)	E 928 500 901 05	body in white	/RL	1	
(1)	E 928 500 901 07	body in white	/RL	1	AUT.
(1)	E 928 500 901 60	body in white	/LL	1	M 650
(1)	E 928 500 901 61	body in white	/LL	1	M 650 AUT.
(1)	E 928 500 901 63	body in white	/RL	1	M 650
(1)	E 928 500 901 65	body in white	/RL	1	M 650 AUT.
		- -- E N D -- -			

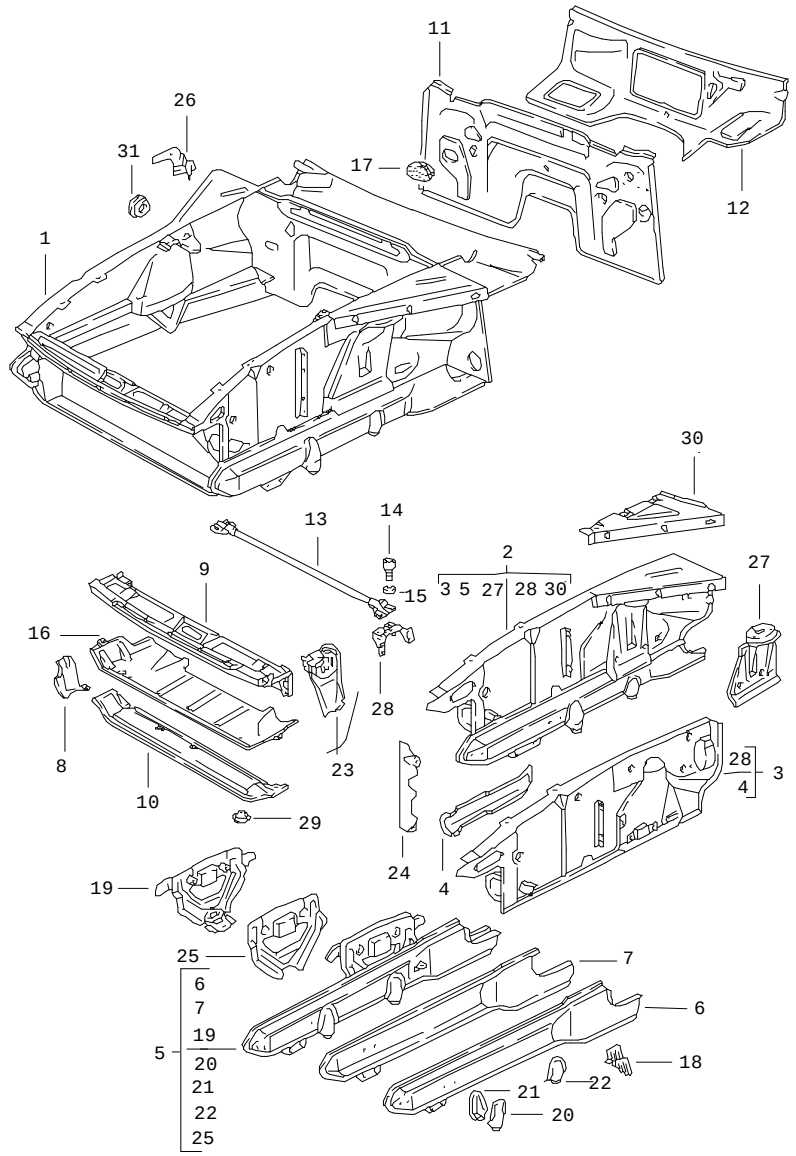

Pos	Part Number	Name	Remarks	Qty	Model
		body front section			
1	A 928 501 949 05	body front section	/LL -85	1	
1	A 927 501 949 05	body front section up to model 83 use also: towing lug 928.722.101.05	/RL -85	1	
(1)	A 928 501 011 02	body front section	/LL 86	1	
(1)	A 927 501 011 02	body front section	/RL 86	1	
2	928 501 947 05	wheel housing	/LL/L-85	1	
2	928 501 948 05	wheel housing	/LL/R-85	1	
(2)	928 501 013 06	wheel housing	/LL/L 86	1	
(2)	928 501 014 06	wheel housing	/LL/R 86	1	
	GRV	wheel housing with bracket	/RL/L-85	1	
	GRV	wheel housing with bracket up to model 83 use also: towing lug 928.722.101.05	/RL/R-85	1	
(2)	927 501 013 06	wheel housing with bracket	/RL/L 86	1	
(2)	927 501 014 06	wheel housing with bracket	/RL/R 86	1	
3	928 501 035 03	wheel housing	/LL/L-85	1	
3	927 501 035 03	wheel housing	/RL/L-85	1	
3	928 501 036 03	wheel housing	/LL/R-85	1	
3	927 501 036 03	wheel housing	/RL/R-85	1	
(3)	928 501 035 04	wheel housing	/LL/L 86	1	
(3)	927 501 035 04	wheel housing	/RL/L 86	1	

Pos	Part Number	Name	Remarks	Qty	Model
(3)	928 501 036 04	wheel housing	/LL/R 86	1	
(3)	927 501 036 04	wheel housing	/RL/R 86	1	
4	928 501 121 02	bracket		2	
5	928 501 915 01	bracket	/L -85	1	
(5)	928 501 916 01	bracket	/R -85	1	
(5)	928 501 015 06	bracket	/L 86	1	
(5)	928 501 016 06	bracket	/R 86	1	
6	928 501 105 02	bracket outer	/L	1	
(6)	928 501 106 02	bracket outer	/R	1	
7	928 501 103 02	bracket inner	/L	1	
(7)	928 501 104 02	bracket inner	/R	1	
(8)	928 501 129 02	cap	/L	1	
8	928 501 130 02	cap	/R	1	
9	928 501 033 02	terminal piece	/V	1	
10	928 501 031 04	cross member		1	
11	928 502 201 02	firewall	-84	1	
12	928 502 203 02	cross panel	-84	1	
13	928 504 061 02	transverse strut		1	
14	900 119 053 02	pan-head screw M 10 X 16		4	
15	900 025 008 09	washer A 10,5		4	
16	928 504 941 04	protective plate		1	
17	928 504 357 02	water drain valve		1	
18	928 501 307 02	bracket for stabiliser	/L	1	
(18)	928 501 308 02	bracket for stabiliser	/R	1	
19	928 501 047 02	bracket	/L	1	
(19)	928 501 048 02	bracket	/R	1	
20	928 501 139 02	bracket	/L	1	
(20)	928 501 140 02	bracket	/R	1	
21	928 501 135 02	bracket	/L	1	
(21)	928 501 136 02	bracket	/R	1	
22	928 501 195 02	bracket	/L	1	
(22)	928 501 196 02	bracket	/R	1	
23	928 501 127 02	bracket for engine pop-up headlight		1	
24	928 501 811 02	lining for radiator	/L	1	
(24)	928 501 812 02	lining for radiator	/R	1	
25	928 501 191 02	bracket	/L	1	
(25)	928 501 192 02	bracket	/R	1	
26	928 501 313 02	retaining bracket for expansion tank F >>92ES8 41837 F >>92ES8 49614	/LL	1 (J)	
26	928 501 313 03	retaining bracket for expansion tank F 92ES8 41838>> F 92ES8 49615>>	/LL	1	
(26)	927 501 313 02	retaining bracket for expansion tank	/RL	1	
27	928 501 083 02	reinforcement	/L -85	1	
27	928 501 084 02	reinforcement	/R -85	1	
(27)	928 501 083 03	reinforcement	/L 86	1	

Pos	Part Number	Name	Remarks	Qty	Model
(27)	928 501 084 03	reinforcement	/R 86	1	
28	928 501 551 02	bearing bracket transverse strut	-84	2	
28	928 501 551 03	bearing bracket	/L 85-	1	
	GRV	prime coated			
		transverse strut			
(28)	928 501 582 03	bearing bracket transverse strut	/R 85-	1	
(29)	803 803 583 A	cover		9	
30	928 501 081 02	side member		1	
(30)	928 501 082 02	side member		1	
		- -- E N D -- -			

Pos	Part Number	Name	Remarks	Qty	Model

Model	Year	MG	SG	Illustration	Restrictions	Update				
928	86	8	01	801-10		179	14:48	01.09.2004	PORSCHE	PET	PORSCHE

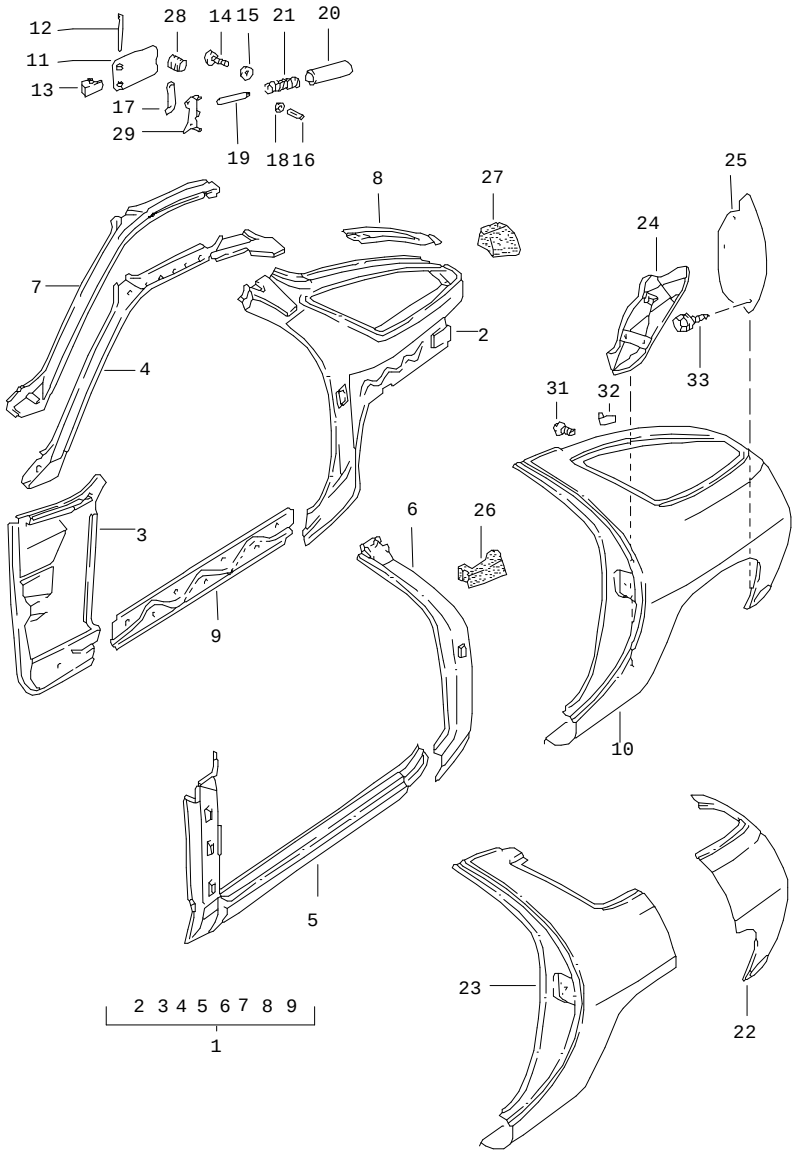

Pos	Part Number	Name	Remarks	Qty	Model
		frame side section			
1	928 502 011 02	side section inner	/L	1	
(1)	928 502 011 04	side section inner	/L	1	M 215
(1)	928 502 012 02	side section inner	/R	1	
(1)	928 502 012 04	side section inner	/R	1	M 215
(2)	928 502 017 04	side section inner rear	/L	1	M 215
(2)	928 502 018 04	side section inner rear	/R	1	
3	928 502 013 09	side section inner front	/LL/L	1	
(3)	927 502 013 09	side section inner front	/RL/L	1	
(3)	928 502 014 09	side section inner front	/LL/R	1	
(3)	927 502 014 09	side section inner front	/RL/R84-	1	
4	928 502 301 02	roof frame lateral	/L	1	
(4)	928 502 302 02	roof frame lateral	/R	1	
5	928 502 015 02	door sill	/L	1	
(5)	928 502 016 02	door sill	/R	1	
6	928 502 051 02	lock pillar	/L	1	
(6)	928 502 052 02	lock pillar	/R	1	
7	928 502 331 02	roof frame lateral upper	/L	1	
(7)	928 502 332 02	roof frame lateral upper	/R	1	
8	928 502 033 02	interior frame	/L	1	

Pos	Part Number	Name	Remarks	Qty	Model
(8)	928 502 034 02	interior frame	/R	1	
9	928 502 111 02	separator		2	
(10)	928 503 061 12	side section outer	/L -84	1	
(10)	928 503 061 14	side section outer	/L 85-	1	
(10)	928 503 061 13	side section outer	/L 84	1	M 215
(10)	928 503 062 12	side section outer	/R	1	
(10)	928 503 062 13	side section outer	/R 84	1	M 215
11	928 504 301 02	flap		1	
12	928 504 313 02	axle		1	
13	928 504 326 02	stop		1	
14	900 146 109 00	oval-head screw M 5 X 12		2	
15	N 011 665 11	washer B 5,3		2	
16	900 095 036 02	tensioning sleeve 2 X 8		1	
17	928 504 335 02	desk pad		1	
18	928 504 347 02	washer		1	
19	928 504 341 02	guiding rod		1	
20	928 504 343 02	protective tube		1	
21	928 504 345 02	compression spring		1	
22	928 503 911 06	sub-part	/L	1	
22	928 503 062 12	side section	/R	1	
23	928 503 061 14	side section	/L	1	
(23)	928 503 062 12	side section	/R	1	
24	928 504 303 02	wheel cover	/L	1	
(24)	928 504 304 02	wheel cover	/R	1	
25	928 504 309 02	wheel cover	/L	1	
26	928 504 281 02	seal	/L	1	
(26)	928 504 282 02	seal	/R	1	
27	928 504 283 02	seal	/L/H	1	
(27)	928 504 284 02	seal	/R/H	1	
28	999 703 135 40	rubber buffer		1	
29	928 504 325 02	hinge half		1	
31	999 015 005 07	half-round screw		4	
32	928 503 621 02	pneumatic spring mount		2	
33	900 187 115 02	screw B 5,5 X 16		10	

- -- E N D -- -

Model	Year	MG	SG	Illustration	Restrictions	Update				
928	86	8	01	801-15		179	14:48	01.09.2004	PORSCHE	PET	PORSCHE

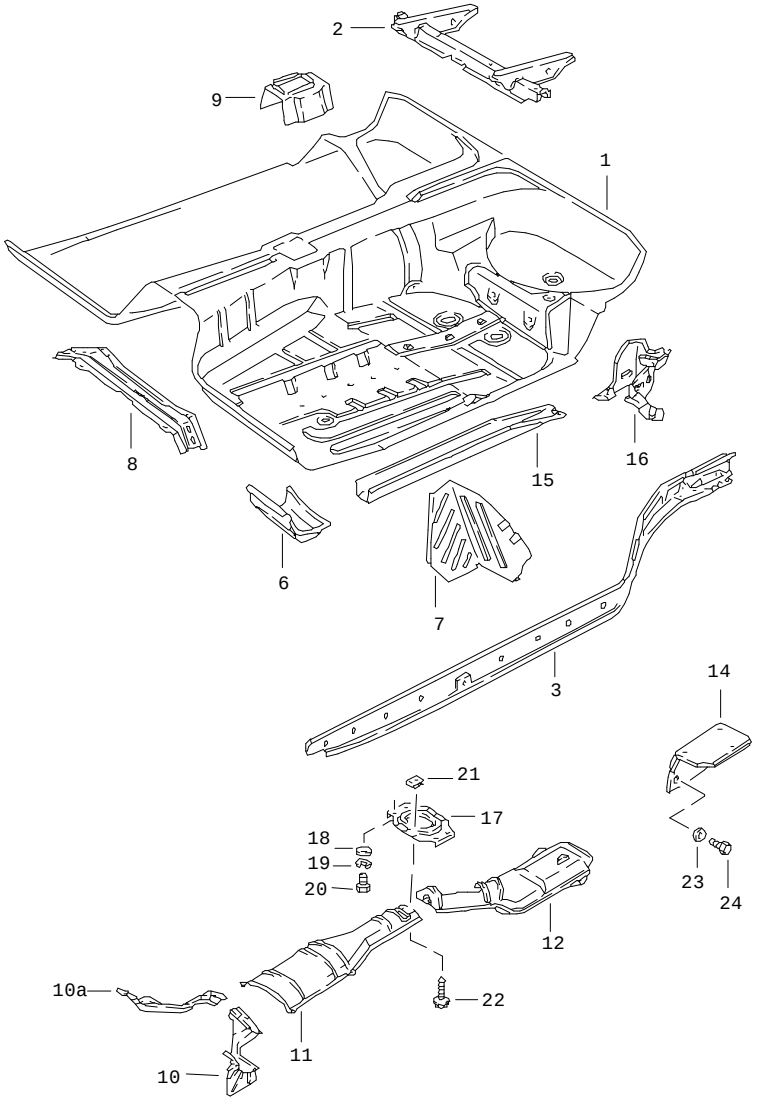

Pos	Part Number	Name	Remarks	Qty	Model
		floor section			
(1)	E 928 501 953 03	floor section	/L -85	1	
(1)	928 501 954 03	floor section	/R -85	1	
(1)	928 501 953 04	floor section	/LL/L 86	1	
(1)	928 501 954 04	floor section	/LL/R 86	1	
(1)	927 501 953 04	floor section	/RL/L 86	1	
(1)	927 501 954 04	floor section	/RL/R 86	1	
(2)	928 501 055 60	seat support	/L -84	1	
(2)	928 501 056 60	seat support	/R -84	1	
3	928 501 021 04	side member	/L	1	
(3)	928 501 022 04	side member	/R	1	
(6)	928 501 093 03	gusset plate	/L	1	
(6)	928 501 094 02	gusset plate	/R -85	1	
(6)	928 501 094 03	gusset plate	/R 86	1	
7	928 551 071 02	foot support	/LL/L	1	
7	927 551 071 02	foot support	/RL/R	1	
8	928 501 901 05	cross member		1	
9	928 501 059 02	reinforcement shift-lever bearing	-84	1	
10	928 504 921 05	heat protection plate		1	
10A	928 504 924 05	heat protection plate	85-	1	
11	928 504 491 01	heat protection plate	82-86	1	
(11)	928 504 491 01	heat protection plate	86	1	
(12)	928 504 931 04	heat protection plate	/L	1	
(12)	928 504 932 04	heat protection plate	/R 86	1	
14	928 504 051 02	heat protection plate	-85	1	
15	928 501 577 02	side member	/L -85	1	
15	928 501 578 50	side member	/R -85	1	

Pos	Part Number	Name	Remarks	Qty	Model
16	928 501 067 03	link bearing	/L 83-85	1	
(16)	928 501 068 03	link bearing	/R 83-85	1	
17	928 501 495 02	bridge seat belt		1	
18	900 025 007 02	washer A 8,4		4	
19	900 027 015 02	lock ring B 8		4	
20	900 075 087 02	hexagon-head bolt M 8 X 16		4	
21	999 591 487 02	speed nut B 5,5		16	
22	900 187 115 02	screw B 5,5 X 16		16	
23	N 011 524 7	washer B 6,4		2	
24	900 075 310 02	hexagon-head bolt M 6 X 12		2	
		- -- E N D -- -			

Pos	Part Number	Name	Remarks	Qty	Model

Model	Year	MG	SG	Illustration	Restrictions	Update	14:48	01.09.2004	PORSCHE	PET	PORSCHE
928	86	8	01	801-20		179					

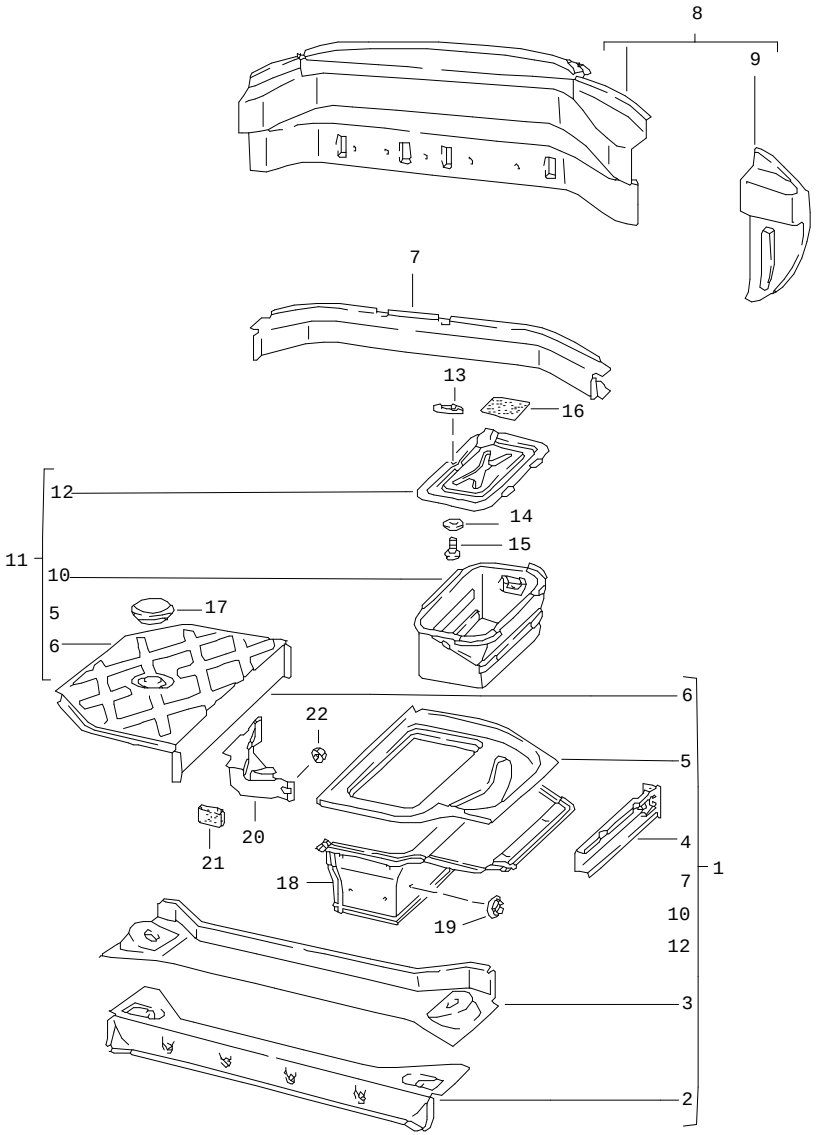

Pos	Part Number	Name	Remarks	Qty	Model
		frame rear rear end			
1	928 501 071 03	rear end	-85	1	
(1)	928 501 071 04	rear end	86	1	
2	928 501 515 02	cross member		1	
3	928 501 715 02	cross member	-85	1	
(3)	928 501 715 03	cross member	86	1	
4	928 501 207 02	extension for bracket F >>92DS8 41924 F >>92DS8 49562	/L	1	 (J)
4	928 501 207 03	extension for bracket F 92DS8 41925>> F 92DS8 49563>>	/L	1	 (J)
(4)	928 501 208 04	extension for bracket	/R	1	
5	928 501 701 02	floor section	/L -85	1	
(5)	928 501 701 03	floor section	/L 86	1	
6	928 501 702 02	floor section	/R -85	1	
(6)	928 501 702 03	floor section	/R 86	1	
7	928 501 079 02	cross member F >>92DS8 41924 F >>92DS8 49562		1	 (J)
7	928 501 079 03	cross member F 92DS8 41925>> F 92DS8 49563>>		1	 (J)
8	928 502 081 04	terminal piece	/LL	1	
8	927 502 081 04	terminal piece	/RL	1	
9	928 502 341 02	terminal piece	/L	1	
(9)	928 502 342 02	terminal piece	/R	1	

Pos	Part Number	Name	Remarks	Qty	Model
10	928 501 805 02	battery box	-85	1	
(10)	928 501 805 03	battery box	86	1	
11	928 501 075 03	floor	/H -86	1	
(11)	928 501 075 04	floor	/H 86	1	
12	E 928 504 011 03	cover		1	
13	928 504 103 02	latch		1	
14	N 011 665 3	washer B 5,3		1	
15	N 013 973 4	tapping screw B 5,5 X 13 for emergency wheel		1	
17	928 504 207 02	cover		1	
18	928 504 053 00	heat protection plate	86	1	
19	999 591 736 02	speed nut	86	10	
20	928 612 541 00	cover	86	1	
21	928 612 494 00	piece of plastic foam	86	1	
22	999 591 839 40	hexagon nut	86	1	
22	999 591 839 40	hexagon nut		1	
		- -- E N D -- -			

Model	Year	MG	SG	Illustration	Restrictions	Update				
928	86	8	01	801-25		179	14:49	01.09.2004	PORSCHE	PET	PORSCHE

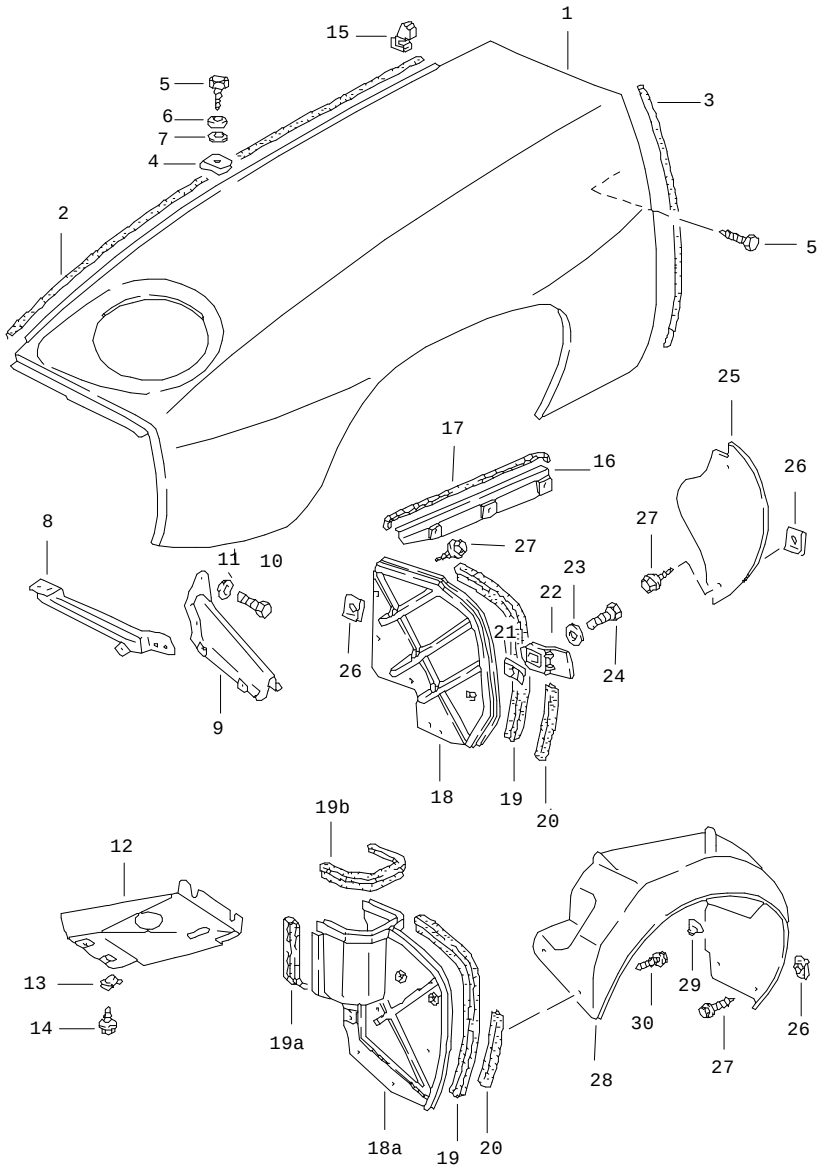

Pos	Part Number	Name	Remarks	Qty	Model
		wing			
1	928 503 011 02	wing	/L	1	
1	928 503 012 02	wing	/R	1	
(1)	928 503 011 03	wing	/L 84	1	M 215
(1)	928 503 012 03	wing	/R 84	1	M 215
2	000 043 129 00	sealing strap		2	
3	000 043 129 00	sealing strap		*	
4	999 507 003 02	speed nut		26	
5	900 187 010 02	tapping screw BZ 6,3 X 19		26	
6	900 151 003 02	washer A 6,4		26	
7	999 704 157 40	washer		26	
8	928 503 317 02	wing strut	/L	1	M 470
8	928 503 318 02	wing strut	/R	1	M 470
9	928 503 031 03	wing strut		2	
(9)	928 503 031 02	wing strut		2	M 470
10	999 072 005 09	hexagon-head bolt M 6 X 12		10	
11	N 012 226 5	spring washer		10	
12	928 504 027 02	cover headlamp lower	/L	1	M 470
(12)	928 504 028 02	cover headlamp lower	/R	1	M 470
13	999 591 486 02	speed nut B 6,3	-84	4	M 470
13	999 507 048 03	speed nut B 6,3	85	4	M 470
14	900 187 108 02	tapping screw B 6,3 X 16		4	M 470

Pos	Part Number	Name	Remarks	Qty	Model
15	E 928 511 577 02	seal F >>92ES8 41117 F >>92ES8 49584		2	(J)
(15)	928 511 579 03	seal F 92ES8 41118>> F 92ES8 49585>>		2	(J)
16	E 928 504 317 02	cover upper	/L -84	1	
(16)	928 504 318 02	cover upper	/R -84	1	
17	928 504 211 02	sealing strap	-84	2	
18	928 504 221 10	cover	/V 83	2	
(18)	928 504 221 08	cover	/V 83	2	M 470
(18A)	928 504 221 06	cover	/L 84	1	M 470
(18)	928 504 221 10	cover	/R 84	1	
(18)	928 504 221 08	cover	/R 84	1	M 470
(18A)	928 504 221 07	cover	/L 84-86	1	
(18A)	E 928 504 221 09	cover	/L 85	1	M 470
(18)	928 504 221 08	cover	/R 85	1	
(18)	928 504 221 10	cover	/R 85	1	M 470
19	928 504 223 02	sealing strap	-83	2	
19	928 504 223 02	sealing strap	/R 84-	1	
(19)	928 504 223 03	sealing strap	/L 84-	1	
19A	928 504 223 04	sealing strap	/L 84-	1	
19B	928 504 223 05	sealing strap	/L 84-	1	
(20)	928 504 233 02	gasket		2	
21	999 507 048 03	speed nut M 6		2	
22	928 504 219 02	support	/L	1	
(22)	928 504 220 02	support	/R	1	
23	N 011 612 3	washer R 6,6		2	
(23)	N 012 226 5	spring washer B 6		2	
24	900 075 057 02	hexagon-head bolt M 6 X 16		2	
25	928 504 315 02	cover	/L -84	1	
(25)	928 504 316 03	cover	/R -84	1	
26	999 591 487 02	speed nut B 5,5		31	
27	900 187 115 02	screw B 5,5 X 16		21	
28	928 504 381 05	wheel-housing liner	/L 85	1	
(28)	928 504 382 05	wheel-housing liner	/R 85	1	
29	999 049 022 40	plastic nut	85	2	
30	900 187 108 02	tapping screw BZ 6,3 X 16	85	4	

- -- E N D -- -

Model	Year	MG	SG	Illustration	Restrictions	Update				
928	86	8	01	801-30		179	14:49	01.09.2004	PORSCHE	PET	PORSCHE

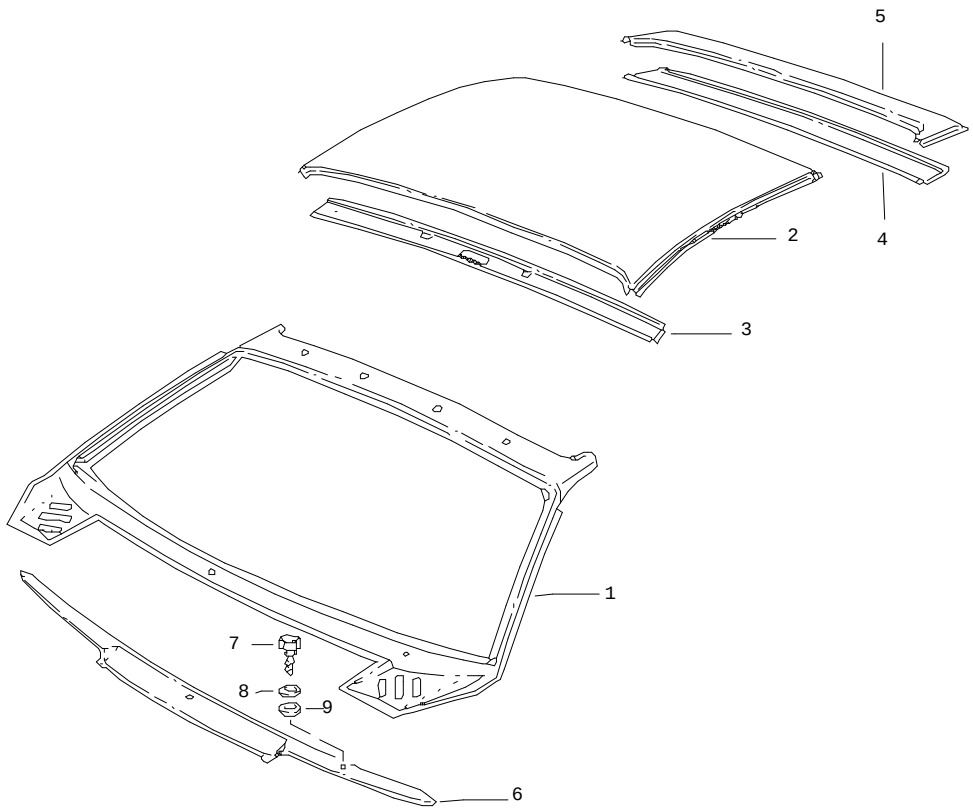

Pos	Part Number	Name	Remarks	Qty	Model
		roof cowl			
1	928 503 041 08	cowl	/LL	1	
(1)	927 503 041 04	cowl	/RL	1	
2	928 503 501 02	roof		1	
3	928 502 383 02	roof frame	/V	1	
4	928 502 393 02	roof frame rear lower		1	
5	928 502 395 02	roof frame rear upper		1	
6	928 559 117 02	cowl panel outer part	/LL	1	
(6)	927 559 117 02	cowl panel	/RL	1	
-	928 559 251 02	gasket cowl panel 1600 MM		1	
7	900 187 010 02	tapping screw BZ 6,3 X 19		2	
8	900 151 003 02	washer A 6,4		2	
9	999 704 157 40	washer		2	
		- -- E N D -- -			

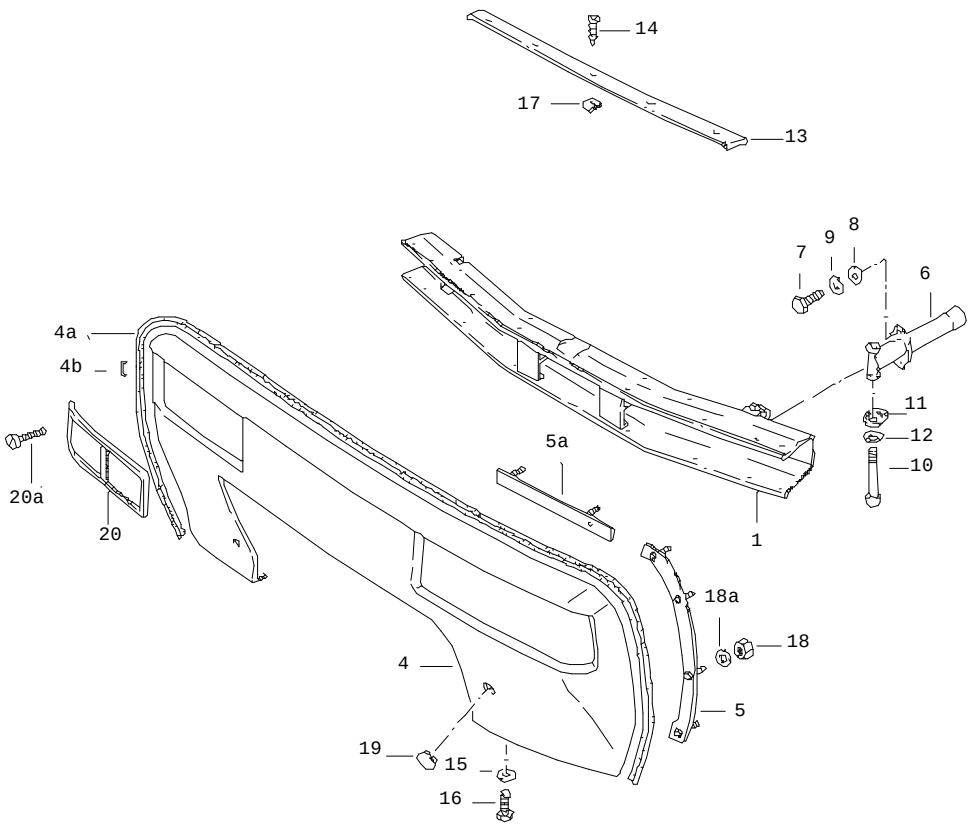

Pos	Part Number	Name	Remarks	Qty	Model
		bumper front			
1	928 505 010 04	bracket		1	
(1)	928 505 010 05	bracket	84	1	M 215
4	928 505 113 06	lining		1	
-	928 025 289 02	piping		*	
4A	-	2300 MM		1	
5	928 505 033 02	retaining strip	/L	1	
(5)	928 505 034 02	retaining strip	/R	1	
5A	928 505 031 02	retaining strip upper upper		2	
6	928 505 017 02	impact pipe		2	
(6)	928 505 015 02	impact absorber		2	M 58,M 215
7	900 075 085 02	hexagon-head bolt M 8 X 20		4	
8	900 025 007 02	washer 8,4		4	
9	N 012 241 8	spring washer B 8		4	
10	900 067 084 02	pan-head screw M 12 X 110		2	
11	999 025 212 09	washer 12		2	
(11)	928 505 243 02	eccentric washer		2	M 58,M 215
12	900 222 003 01	cup spring		2	
13	928 505 114 02	rail		1	
14	900 145 090 07	rais. counters. h. tap. s. B 4,8 X 19		5	
15	900 151 003 02	washer A 6,4		2	
16	900 075 057 02	hexagon-head bolt M 6 X 16		2	

Pos	Part Number	Name	Remarks	Qty	Model
17	999 591 485 02	speed nut B6 4,8		5	
18	N 021 196 1	lock nut M 5		12	
18A	900 025 003 02	washer A 5,3		12	
19	928 505 131 02	cover		2	
(20)	928 505 117 04	frame	/L	1	
(20)	928 505 118 04	frame	/R	1	
(20)	928 505 055 02	frame	/L 84	1	M 215
(20)	928 505 056 02	frame	/R 84	1	M 215
20A	900 143 125 07	oval-head sheetmetal screw B 3,5 X 13		4	
(20A)	900 143 084 07	oval-head sheetmetal screw B 3,5 X 16	84	4	M 215
		- -- E N D -- -			

Pos	Part Number	Name	Remarks	Qty	Model

Model	Year	MG	SG	Illustration	Restrictions	Update				
928	86	8	02	802-05		179	14:49	01.09.2004	PORSCHE	PET	PORSCHE

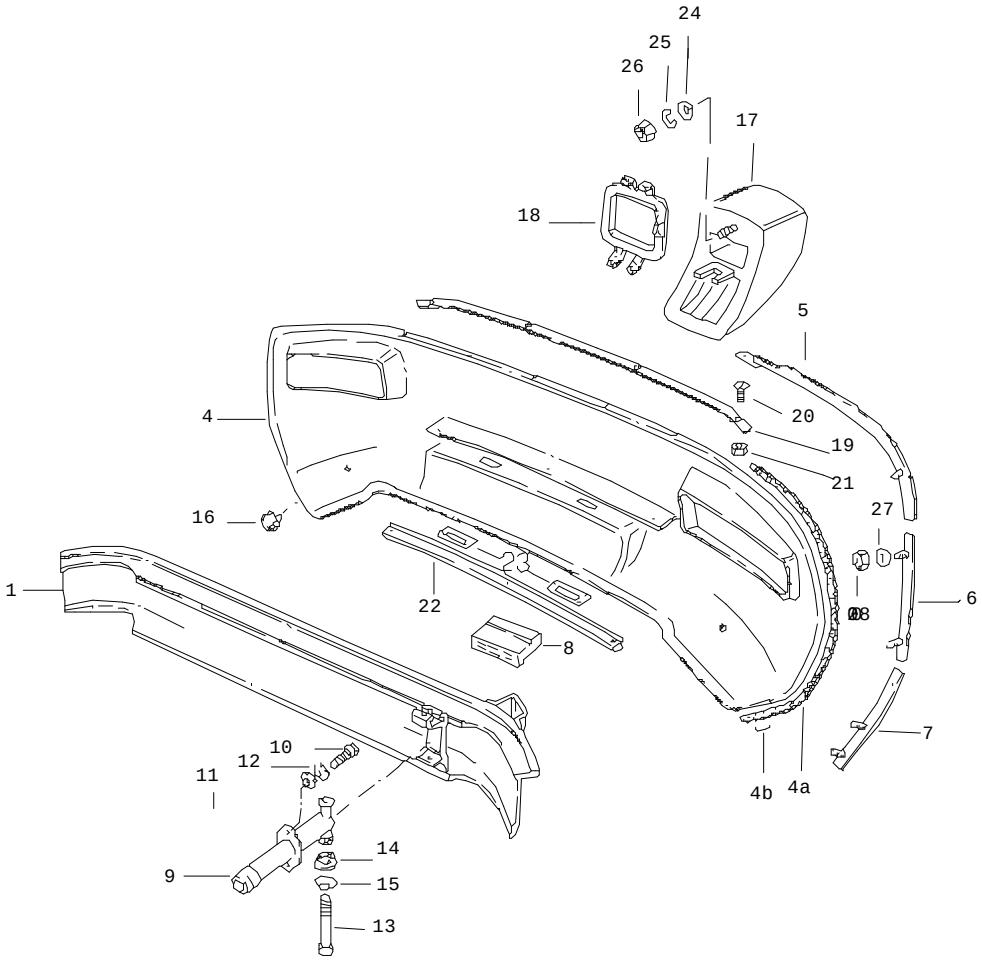

Pos	Part Number	Name	Remarks	Qty	Model
		bumper rear			
(1)	928 505 020 08	bracket	84	1	M 215
(1)	928 505 020 07	bracket up to model 83 order also: towing lug 928.722.101.05		1	
4	928 505 123 03	lining without rear foglamp		1	
(4)	928 505 123 05	lining	84	1	M 215
-	928 025 289 02	piping		*	
4A	-	1000 MM		2	
5	928 505 035 02	retaining strip upper	/L	1	
(5)	928 505 036 02	retaining strip upper	/R	1	
6	928 505 037 02	retaining strip centre	/L	1	
(6)	928 505 038 02	retaining strip centre	/R	1	
7	928 505 039 02	retaining strip lower	/L	1	
(7)	928 505 040 02	retaining strip lower	/R	1	
-	999 190 313 02	rivet 3,2		6	
-	999 190 114 30	rivet 3,2		4	
8	928 505 245 02	buffer		2	
-	999 591 450 40	rivet 4,8		3	
-	999 190 312 30	rivet 4,8		3	
(9)	928 505 017 02	impact pipe		2	

Pos	Part Number	Name	Remarks	Qty	Model
9	928 505 015 02	impact absorber		2	M 58,M 215
10	900 075 085 02	hexagon-head bolt M 8 X 20		4	
11	900 025 007 02	washer 8,4		4	
12	N 012 241 8	spring washer B 8		4	
13	900 067 084 02	pan-head screw M 12 X 110		2	
14	999 025 212 09	washer 12		2	
(14)	928 505 243 02	eccentric washer		2	M 58
(14)	928 505 243 02	eccentric washer	84	2	M 215
15	900 222 003 01	cup spring		2	
16	928 505 131 02	cover		2	
17	E 928 505 005 03	buffer	/L 84	1	M 215
(17)	E 928 505 006 03	buffer	/R 84	1	M 215
18	928 505 285 02	frame for rear fog light	/L	1	
19	928 505 267 02	rail		1	
(20)	900 144 029 07	counters. head tapp. screw B 4,8 X 25		4	
(21)	999 591 485 02	speed nut B6 4,8		4	
22	928 505 253 02	reinforcement strip		1	
23	928 505 112 02	mounting plate		2	
24	900 025 007 02	washer A 8,4	84	2	M 215
25	N 012 241 8	spring washer B 8	84	2	M 215
26	900 076 044 02	hexagon nut M 8	84	2	M 215
27	900 025 003 02	washer A 5,3		11	
28	N 021 196 1	lock nut M 5		11	

- -- E N D -- -

Model	Year	MG	SG	Illustration	Restrictions	Update				
928	86	8	02	802-10		179	14:50	01.09.2004	PORSCHE	PET	PORSCHE

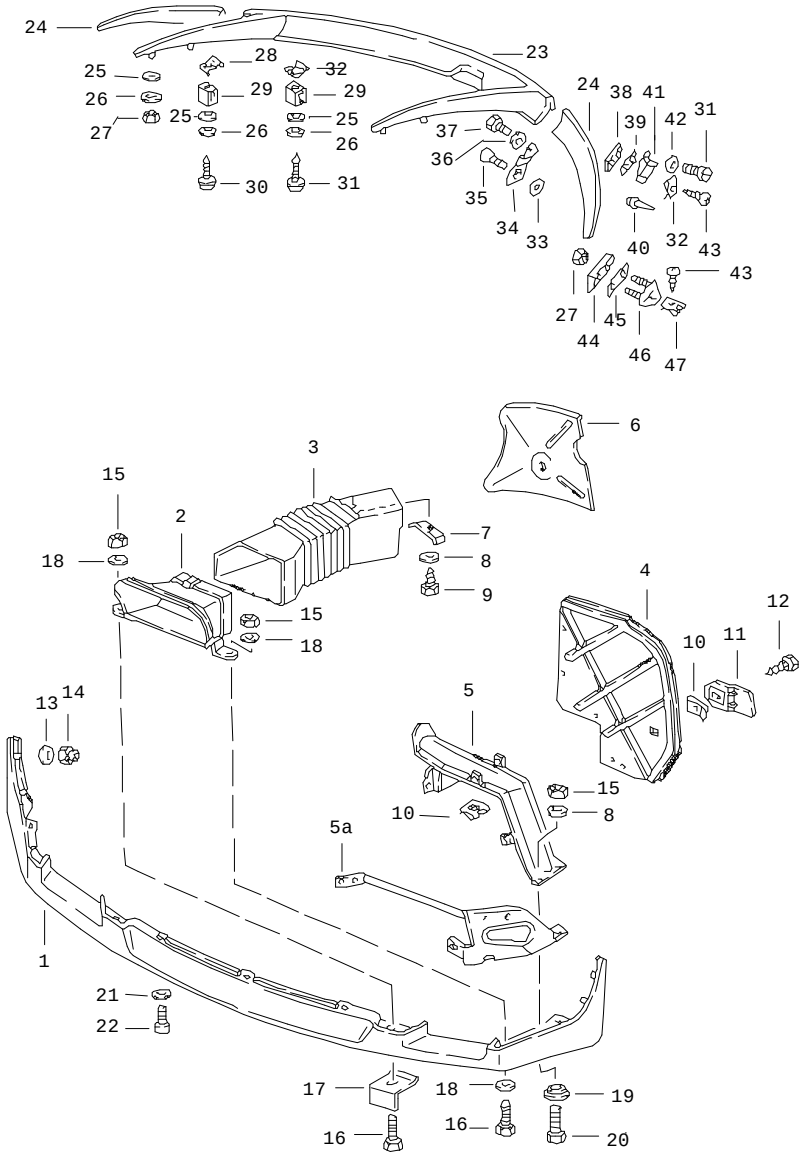

Pos	Part Number	Name	Remarks	Qty	Model
		spoiler front and rear			
1	928 505 071 03	front spoiler		1	
2	928 505 159 02	ventilation grille	/L	1	
(2)	928 505 160 02	ventilation grille	/R	1	
3	928 504 159 02	vent hose	/L	1	
(3)	928 504 160 02	vent hose see group	/R	1	
4	-	8/01/25 POS.18 see group	-83		
4	-	8/01/25 POS.18 see group	/R 84-		
4	-	8/01/25POS.18A	/L 84-		
5	928 503 031 03	wing strut		2	
5A	928 503 333 03	wing strut	/L 84	1	M 215
(5A)	928 503 334 03	wing strut see group	/R 84	1	M 215
6	-	4/01/00 POS.17			
7	928 504 247 02	support		2	
8	N 011 524 7	washer B 6		14	
9	900 187 108 02	tapping screw M 6,3 X 16 see group		12	
10	-	8/01/25 POS.21			
11	-	8/01/25 POS.22			
11	-	8/01/25 POS.22			
12	-	8/01/25 POS.24			
13	900 025 003 02	washer A 5,3		6 6	
14	900 910 008 02	lock nut M 5		6	

Pos	Part Number	Name	Remarks	Qty	Model
15	900 910 011 02	lock nut M 6		6 6	
16	900 075 341 02	screw M 6 X 25		4 4	
17	928 505 373 02	support		2	
18	N 011 612 3	washer R 6,6		6 6	
19	928 503 255 00	spacer		2	
20	N 010 217 9	hexagon-head bolt M 6 X 20		2	
21	N 011 665 3	washer B 5,3		3	
22	999 919 164 09	oval-head screw M 5 X 12		3	
23	928 512 071 02	rear spoiler		1	
24	928 512 073 02	rear spoiler	/L	1	
24	928 512 074 02	rear spoiler	/R	1	
25	928 559 143 02	sealing ring		10	
26	999 025 083 70	washer 3,7 X 11 X 0,5		10	
27	900 910 006 02	lock nut M 4		4	
28	928 512 307 02	speed nut		6	
29	928 512 199 02	spacer		12	
30	999 450 004 02	tapping screw B 4,2 X 28		4	
31	999 450 005 02	tapping screw B 4,2 X 32		6	
32	N 015 429 2	speed nut B 4,2		6	
33	928 512 611 02	desk pad		2	
34	928 512 589 02	retaining bracket		2	
35	999 219 003 07	countersunk-head screw M 6 X 16		2	
36	900 151 037 07	washer A 6,4		2	
37	999 217 006 07	hexagon-head bolt M 6 X 10		4	
38	928 512 601 02	threaded plate		2	
39	928 512 613 02	desk pad		2	
40	999 190 151 30	tubular rivet D 4 X 4,8 - 6		2	
41	928 512 595 02	bracket		2	
42	N 011 524 7	washer A 6,4		2	
43	N 013 965 9	oval-head sheetmetal screw BZ 4,2 X 9,5		4	
44	928 512 609 02	wedge		2	
45	928 512 615 02	desk pad		2	
46	928 512 605 02	bracket		2	
47	999 507 229 02	speed nut B 4,2		2	
		- -- E N D -- -			

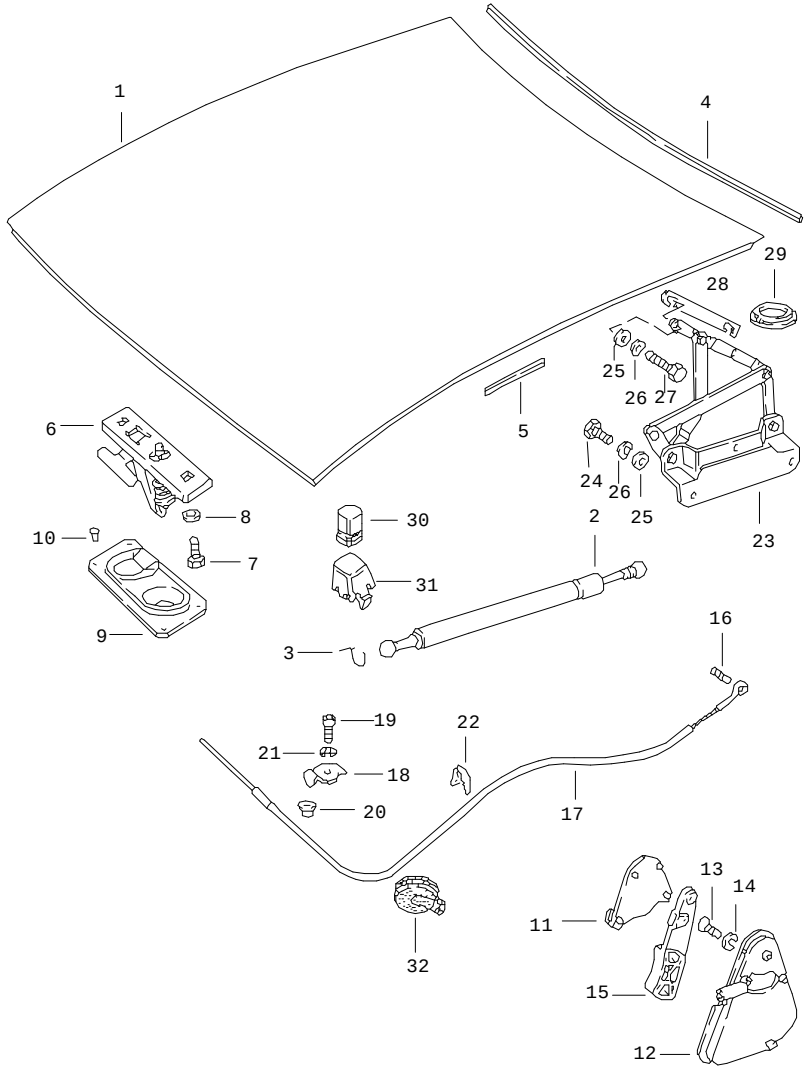

Pos	Part Number	Name	Remarks	Qty	Model
		cover front mounting parts			
1	928 511 005 03	bonnet up to model 83 order also:		1	
--	928 628 077 00	nozzle		2	
2	928 511 139 03	gas-filled strut		2	
3	900 169 016 02	clip		4	
4	928 511 141 03	gasket		1	
5	928 511 551 03	gasket lateral		2	
6	928 511 029 02	lid lock upper part F >>92FS8 41433 F >>92FS8 49608		1	 (J)
(6)	928 511 029 03	lid lock upper part F 92FS8 41434>> F 92FS8 49609>>		1	 (J)
7	900 076 010 02	hexagon nut M 6		2	
8	N 011 666 7	washer B 6,4		2	
9	928 511 027 02	lid lock lower part		1	
10	999 190 128 30	blind rivet 4,8 X 2		4	
11	928 511 143 02	cover		1	
	70B	black			
12	928 511 173 02	cup		1	
	70B	black			
13	900 249 001 02	countersunk-head screw M 6 X 15		2	
14	N 012 006 4	lock ring B 6		2	

Pos	Part Number	Name	Remarks	Qty	Model
15	928 511 175 02	pull handle		1	
	70B	black			
16	900 197 018 00	roll pin 4 X 12		1	
17	928 511 037 04	wire pull	/LL	1	
(17)	927 504 037 00	wire pull	/RL	1	
18	928 511 541 02	clamping piece		1	
19	900 067 008 02	pan-head screw M 6 X 12		1	
20	928 511 543 02	sleeve		1	
21	N 012 007 2	lock ring A 6		1	
22	999 513 007 40	tie-wrap		1	
23	928 511 041 04	lid hinge	/L	1	
(23)	928 511 042 04	lid hinge	/R	1	
24	N 010 237 6	hexagon-head bolt M 8 X 12		6	
25	900 025 007 02	washer 8,4		10	
26	N 012 241 8	spring washer A 8		10	
27	900 075 309 08	hexagon-head bolt M 8 X 20		4	
28	928 511 419 02	compensating plate		X	
29	928 511 321 02	cap	83	2	
(29)	928 511 321 03	cap	84-	2	
30	999 703 132 40	rubber buffer		2	
31	928 511 203 02	support		2	
32	111 957 861	grommet		1	
		- -- E N D -- -			

Pos	Part Number	Name	Remarks	Qty	Model

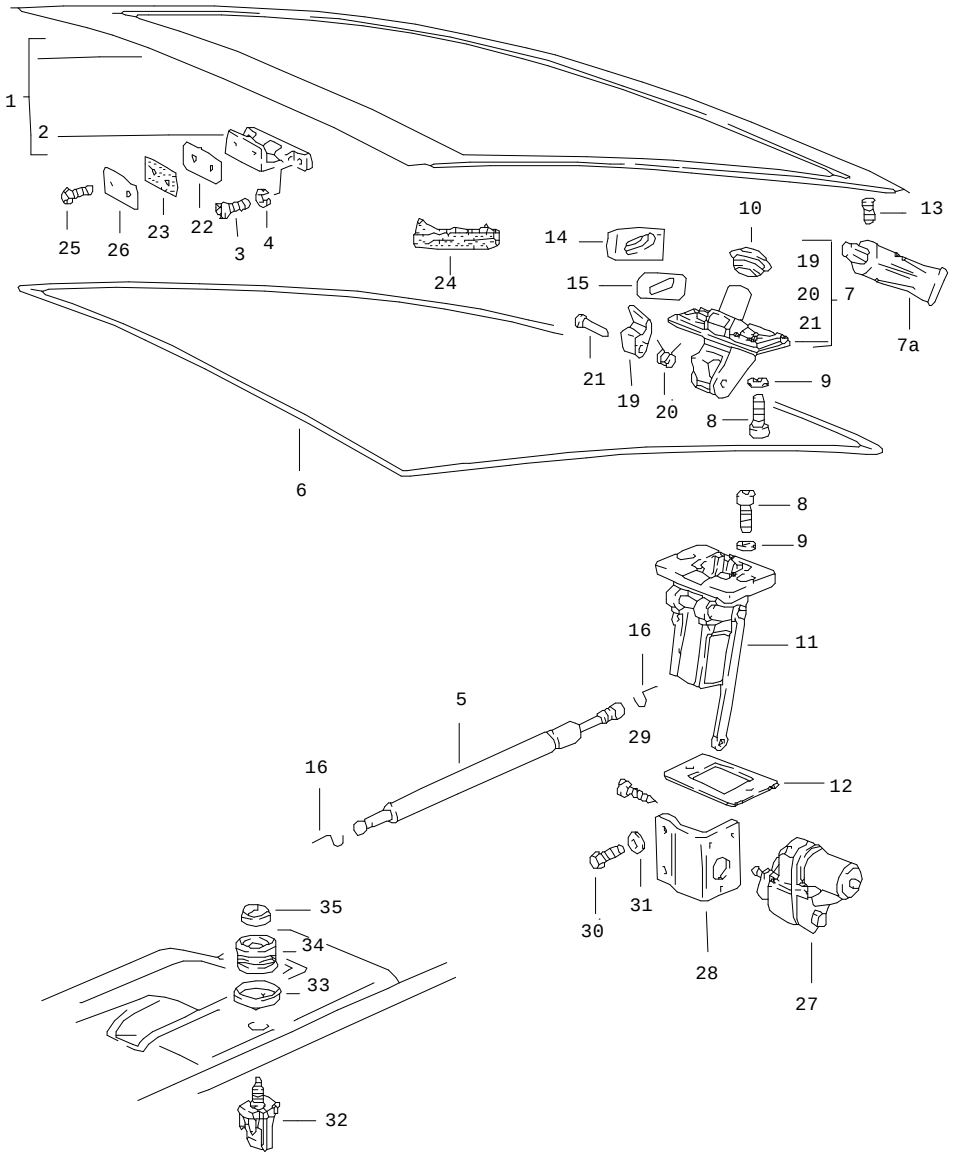

Pos	Part Number	Name	Remarks	Qty	Model
		cover rear mounting parts			
		differing parts for alarm system see group 8/04/20			
1	928 512 005 03	cover		1	
2	928 512 041 04	hinge		2	
3	999 509 012 02	pan-head screw M 6 X 20		8	
4	N 012 026 3	lock ring A 6		8	
5	928 512 331 05	gas-filled strut		2	
6	928 512 129 02	gasket		1	
7	928 512 903 02	lid lock secondary key w/o stipulated lock number		1 1	
(7)	928 512 901 02	lid lock secondary key with stipulated lock-no. state lock number		1 1	
7A	000 043 204 21	grease for lock cylinder		1	
8	900 186 149 02	pan-head screw M 8 X 15		4	
9	999 523 102 02	lock washer		4	
10	928 512 169 02	gasket		1	
(11)	928 512 055 40	DECKELSCHLOSS- lower part	-83	1	
11	928 512 055 20	lid lock lower part	84-	1	
12	928 512 179 02	desk pad I		X	
(12)	928 512 181 02	desk pad II		X	

Pos	Part Number	Name	Remarks	Qty	Model
13	999 703 140 40	rubber buffer		2	
14	928 512 057 02	guide wedge		2	
15	928 512 263 02	plate		2	
16	900 169 016 02	clip		4	
19	928 512 161 02	latch		1	
20	928 512 163 02	spring		1	
21	928 512 165 02	clinch pin		1	
22	928 512 409 02	desk pad		X	
23	928 512 413 07	gasket		2	
24	928 512 261 02	water deflector	/L	1	
(24)	928 512 262 02	water deflector	/R	1	
25	999 217 017 02	hexagon-head bolt M 8 X 18		4	
26	928 512 417 03	plate		2	
27	928 624 407 02	electric motor	84-	1	
28	928 624 049 00	support	84-	1	
29	N 013 954 2	oval-head sheetmetal screw B 2,9 X 13	84-	3	
30	999 072 005 09	hexagon-head bolt M 6 X 12	84-	2	
31	N 011 524 7	washer A 6,4	84-	2	
32	928 613 114 00	switch rear lid unlocking device	84-	2	
33	928 613 431 00	rose driver's side	84-	1	
(33)	928 613 431 01	rose passenger's side	84-	1	
34	928 613 433 00	knob	84-	2	
35	928 613 437 00	cap with symbol	84-	2	
		- -- E N D -- -			

Model	Year	MG	SG	Illustration	Restrictions	Update				
928	86	8	04	804-00		179	14:50	01.09.2004	PORSCHE	PET	PORSCHE

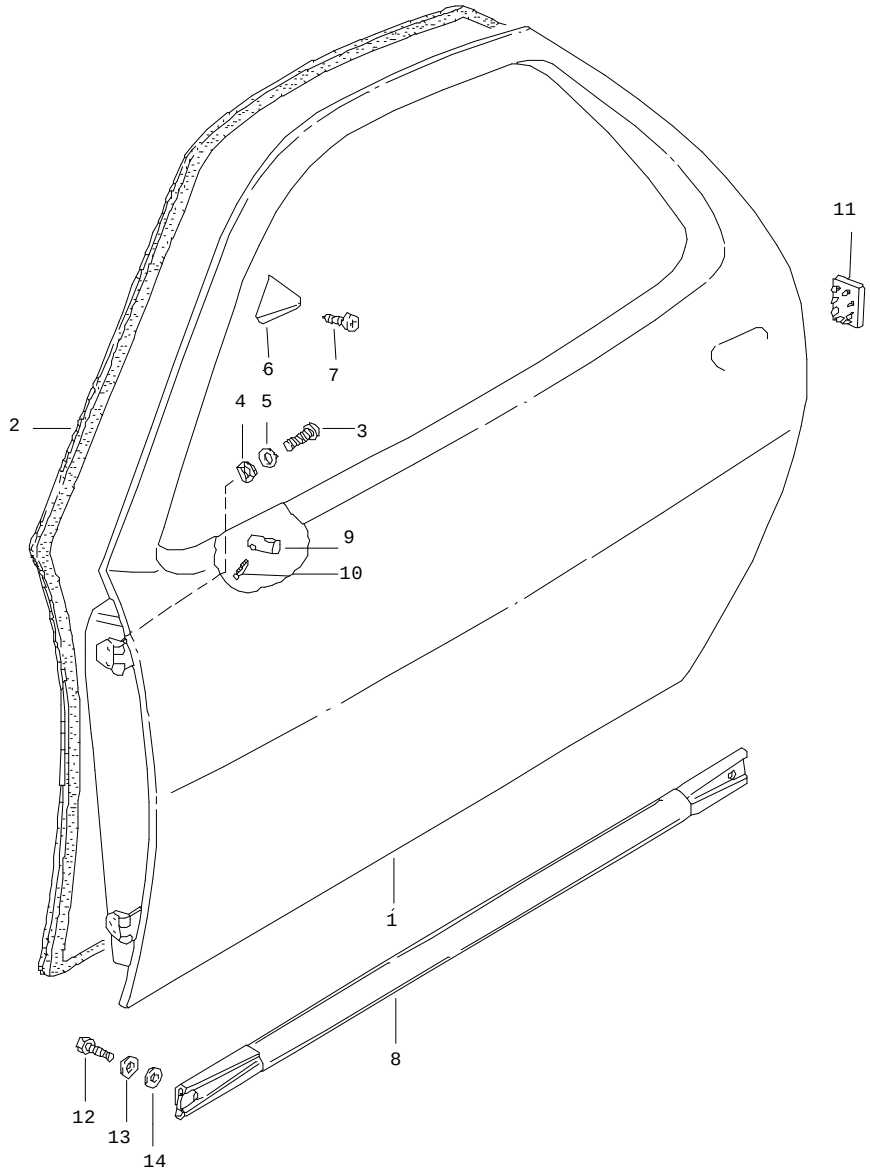

Pos	Part Number	Name	Remarks	Qty	Model
		door in white			
	GRV	door in white prepared for mirror	/L	1	
(1)	928 531 006 07	door in white not prepared for mirror	/R -84	1	
(1)	928 531 006 10	door in white not prepared for mirror	/R	1	
(1)	927 531 005 10	door in white not prepared for mirror	/L	1	
(1)	927 531 006 10	driver's door prepared for mirror	/R	1	
2	928 537 345 03	door seal	/L	1	
(2)	928 537 346 03	door seal	/R	1	
3	N 014 770 3	pan-head screw M 8 X 16		12	
4	900 025 007 02	washer A 8,4		12	
5	999 523 102 02	lock washer 8		12	
6	928 537 341 02	thrust wedge	/L	1	
(6)	928 537 342 02	thrust wedge	/R	1	
7	900 144 008 02	counters. head tapp. screw B 3,5 X 9,5		2	
8	928 531 601 03	reinforcement		2	
9	928 531 235 03	threaded piece		1	
10	N 013 295 1	tensioning sleeve 3 X 12		1	
11	928 537 723 02	plug		2	
12	900 075 085 02	hexagon-head bolt M 8 X 20		4	
13	N 012 009 3	lock ring A 8		4	
14	900 025 007 02	washer A 8,4		4	

Model	Year	MG	SG	Illustration	Restrictions	Update			
928	86	8	04	804-00		179	14:50	01.09.2004	PORSCHE PET PORSCHE

Pos	Part Number	Name	Remarks	Qty	Model	Pos	Part Number	Name	Remarks	Qty	Model
		- -- E N D -- -									

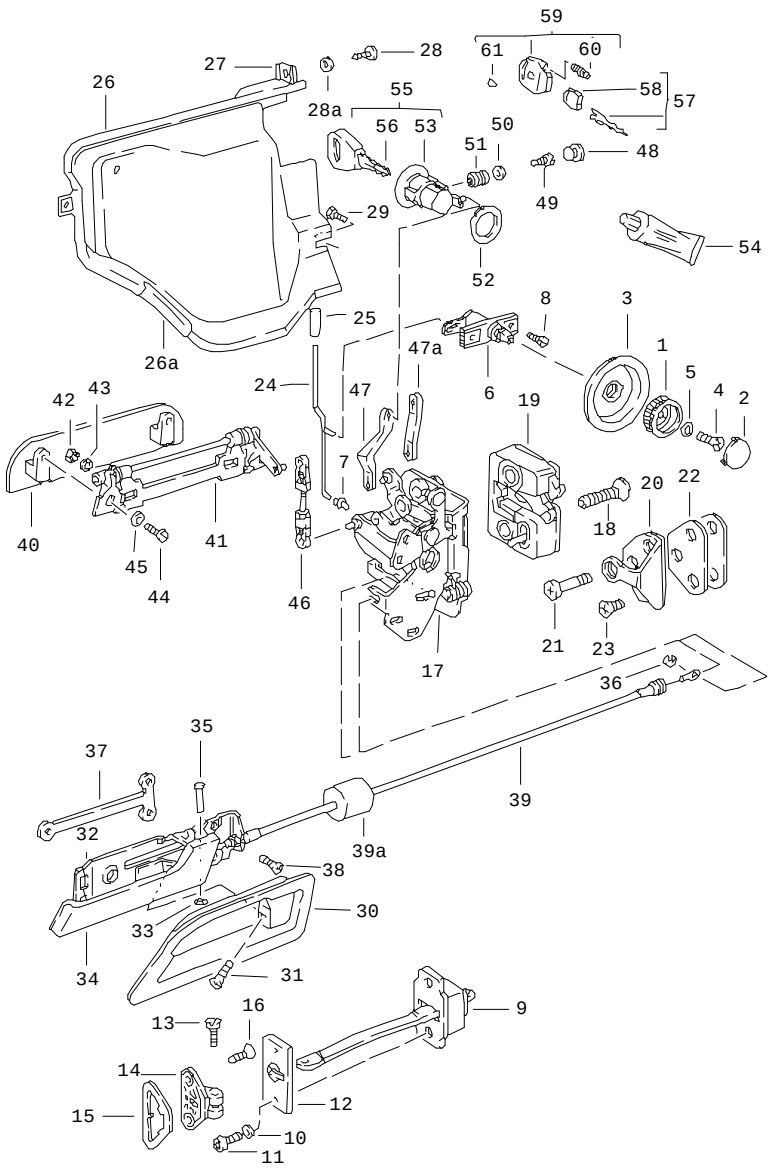

Pos	Part Number	Name	Remarks	Qty	Model
		installation parts for door			
		differing parts for alarm system see group 8/04/20			
1	928 537 581 03	rotary knob		2	
2	911 531 703 00	cap		2	
3	928 537 585 02	bearing shell		2	
4	999 218 010 02	oval-head screw M 5 X 12		2	
5	N 011 665 3	washer B 5,3		2	
6	928 537 096 02	bearing		2	
7	993 531 563 00	linkage clip		2	
8	N 013 968 7	tapping screw B 4,8 X 13		4	
9	928 537 033 04	door support		1	
10	N 011 524 7	washer A 6,4		4	
11	928 537 451 02	pan-head screw		4	
12	928 537 371 02	desk pad		2	
13	928 537 419 03	pan-head screw		2	
(14)	928 537 417 02	bearing bracket	/L	1	
14	928 537 418 02	bearing bracket	/R	1	
(15)	928 537 425 02	desk pad	/L	1	
15	928 537 426 02	desk pad	/R	1	
16	928 537 459 02	oval-head screw M 6 X 25		4	
(17)	928 537 907 03	lock inner part	/L	1	

Pos	Part Number	Name	Remarks	Qty	Model
17	927 537 908 03	lock inner part	/R	1	
18	928 537 721 02	oval-head screw		4	
(19)	928 537 153 03	door lock outer part	/L	1	
19	928 537 154 03	door lock outer part	/R	1	
20	928 537 133 02	door lock striker		2	
21	928 537 131 03	lock pin		2	
22	928 537 135 04	desk pad		2	
23	900 249 024 00	countersunk-head screw M 8 X 25		4	
24	928 537 160 04	locking rod		2	
25	928 555 359 02	knob		2	
(26)	928 537 333 03	covering for lock	/L	1	
26	928 537 334 03	covering for lock	/R	1	
-	999 911 037 50	tread		*	
26A	-	70 MM		2	
27	999 507 033 02	speed nut B 4,8		4	
28	900 143 118 02	tapping screw B 4,8		4	
28A	900 151 028 02	washer B 4,3		4	
29	N 010 239 11	hexagon-head bolt M 8 X 18		2	
(30)	928 537 545 02	finger plate	/L	1	
30	928 537 546 02	finger plate	/R	1	
31	900 269 006 07	countersunk-head screw M 4 X 8		2	
32	928 537 049 02	bearing plate	/L	1	
(32)	928 537 050 02	bearing plate	/R	1	
33	999 591 242 01	speed nut		2	
(34)	928 537 547 02	interior handle	/L	1	
34	928 537 548 02	interior handle	/R	1	
(34)	928 537 169 00	interior handle	/L	1	
	70B	satin black			
34	928 537 170 00	interior handle	/R	1	
	70B	satin black			
35	928 537 557 02	bolt		2	
36	900 116 002 01	lock washer		2	
37	928 537 157 02	nut lock		2	
38	900 269 015 02	countersunk-head screw M 5 X 10		6	
39	928 537 055 02	bowden cable		2	
39A	911 613 636 00	damping piece		2	
40	928 537 661 02	plate		2	
(41)	928 537 063 04	bearing	/L	1	
41	928 537 064 04	bearing	/R	1	
42	900 076 010 02	hexagon nut M 6		4	
43	N 012 006 4	lock ring B 6		4	
44	N 014 761 2	pan-head screw M 6 X 12		4	
45	N 012 226 5	spring washer B 6		4	
46	928 537 140 03	connecting rod		1	
47A	928 537 111 04	operating rod		2	
48	999 703 224 40	cap	-85	2	
48	999 703 224 40	cap	86	2	

Pos	Part Number	Name	Remarks	Qty	Model
49	999 218 003 02	pan-head screw M 6 X 18		2	
50	803 817 121	washer		2	
51	928 537 573 02	spacer sleeve		2	
52	928 537 531 02	desk pad F >>92GS8 41330 F >>92GS8 49623		2	(J)
52	928 537 531 03	desk pad F 92GS8 41331>> F 92GS8 49624>>		2	(J)
53	928 537 633 05	door lock cylinder with rose black without key with stipulated lock-no. state lock number		2	
54	000 043 204 21	grease for lock cylinder		X X	
55	928 537 903 02	door lock cylinder with rose black key w/o stipulated lock number		2 1	
56	928 537 017 02	main key with light state lock number	-85	2	
-	928 537 624 02	cover	-85	2	
-	928 537 625 02	plate	-85	2	
-	928 537 626 02	contact piece	-85	2	
-	928 537 627 02	pressure spring	-85	2	
-	928 537 628 02	knob	-85	2	
-	928 537 630 02	bulb	-85	2	
56	928 537 639 10	blank key state lock number with stipulated lock-no.	-85	2	
57	928 538 033 02	key state lock number with stipulated lock-no.	86	3	
58	944 538 431 00	key cap	86	3	
59	944 538 041 00	key lamp	86	2	
60	928 537 630 02	bulb		2	
61	944 538 443 00	emblem	86	2	

- -- E N D -- -

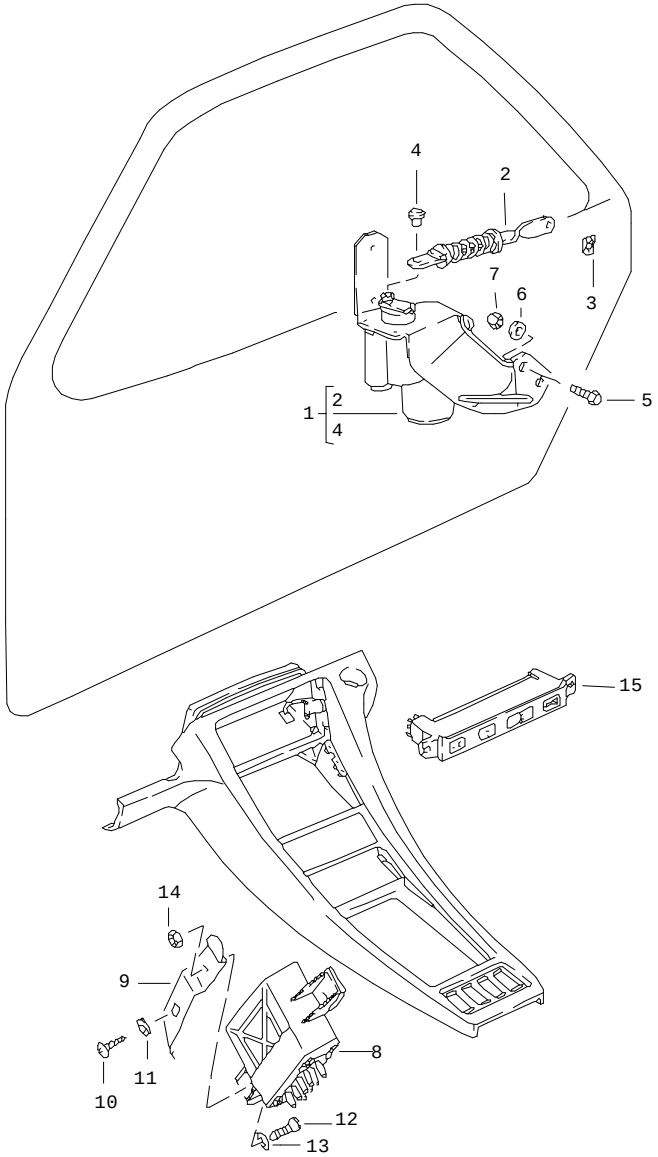

Pos	Part Number	Name	Remarks	Qty	Model
		central locking system			
1	928 624 401 02	electric motor	/L	1	
1	928 624 402 02	electric motor	/R	1	
2	928 624 403 00	operating rod		2	
3	999 166 054 02	sl-lock		4	
4	999 591 570 40	clip		2	
5	N 010 207 6	hexagon-head bolt M5 X 12		4	
6	N 011 665 3	washer B5,3		4	
7	900 910 009 02	lock nut M5		4	
8	928 618 125 00	control unit	84-	1	
9	928 618 135 00	support	84-	1	
10	N 014 139 7	oval-head screw M 6 X 20	84-	1	
11	N 011 524 7	washer A 6,4	84-	1	
12	N 014 140 5	oval-head screw M 6 X 25	84-	1	
13	N 011 524 7	washer A 6,4	84-	1	
14	900 076 010 02	hexagon nut M 6 see group	84-	1	
15	-	9/06/05			
		electric line see group 9/02/11			
		- -- E N D -- -			

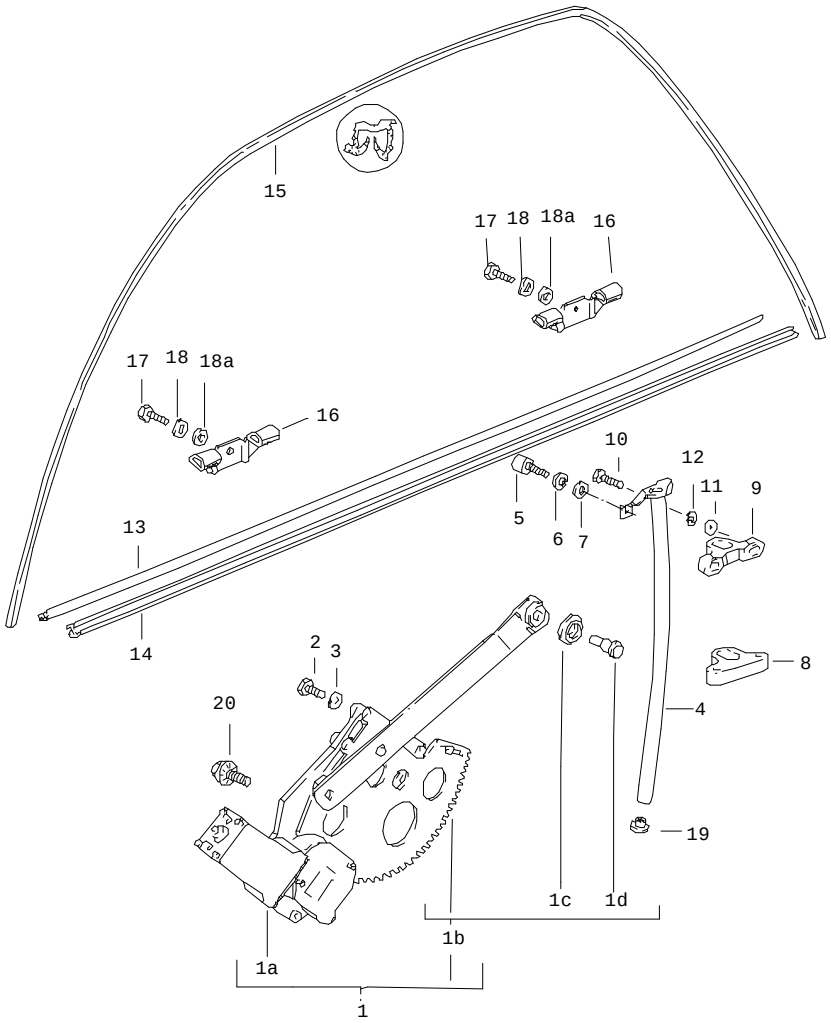

Pos	Part Number	Name	Remarks	Qty	Model
		power windows			
1	928 537 075 06	power windows	/L	1	
(1)	928 537 076 06	power windows	/R	1	
1A	928 624 013 04	engine and transmission for window opener F >>92ES8 41154 F >>92ES8 49584	/L	1	(J)
(1A)	928 624 013 03	engine and transmission for window opener F 92ES8 41155>> F 92ES8 49585>>	/L	1	(J)
1A	928 624 014 04	engine and transmission for window opener F >>92ES8 41154 F >>92ES8 49584	/R	1	(J)
(1A)	928 624 014 03	engine and transmission for window opener F 92ES8 41155>> F 92ES8 49585>>	/R	1	(J)
1B	928 537 909 02	power windows without engine and transmission F >>92ES8 41154 F >>92ES8 49584	/L	1	(J)
1B	928 537 909 04	power windows without engine and transmission F 92ES8 41155>> F 92ES8 49585>>	/L	1	(J)
1B	928 537 910 02	power windows without engine and transmission F >>92ES8 41154 F >>92ES8 49584	/R	1	(J)
1B	928 537 910 04	power windows without engine and transmission F 92ES8 41155>> F 92ES8 49585>>	/R	1	(J)
1C	928 537 918 00	roller		2	
1D	928 537 917 00	bolt		2	

Pos	Part Number	Name	Remarks	Qty	Model
2	N 010 210 13	hexagon-head bolt M 6 X 10		8	
3	N 012 226 5	spring washer A 6		8	
4	928 537 263 02	guide tube	/L	1	
(4)	928 537 264 02	guide tube	/R	1	
5	900 186 011 02	pan-head screw M 6 X 10		4	
6	900 151 007 02	washer B 7,4		4	
7	N 012 006 4	lock ring B 6		4	
8	928 537 259 02	slide lower	/L	2	
(8)	928 537 260 02	slide lower	/R	2	
9	928 537 289 02	slide upper	/L	2	
(9)	928 537 290 02	slide upper	/R	2	
10	900 075 016 02	hexagon-head bolt M 6 X 22		4	
11	N 011 524 7	washer B 6,4		4	
12	N 012 006 4	lock ring B 6		4	
13	928 537 319 03	sealing for door slot	/L	1	
(13)	928 537 320 03	sealing for door slot	/R	1	
14	928 537 321 03	sealing for door slot outer	/L	1	
14	928 537 322 03	sealing for door slot outer	/R	1	
15	928 537 323 03	window guide	/L 85-	1	
(15)A	928 537 324 03	window guide	/R -84	1	
(15)	928 537 324 03	window guide	/R	1	
-	999 920 004 02	u-clamp		10	
16	928 537 085 03	stop		4	
17	N 014 761 2	pan-head screw M 6 X 12		4	
18	N 012 226 5	spring washer B 6		4	
18A	999 025 108 02	washer 6,4		4	
19	928 537 285 02	insert		2	
20	999 093 004 02	hexagon-head bolt		6	

- -- E N D -- -

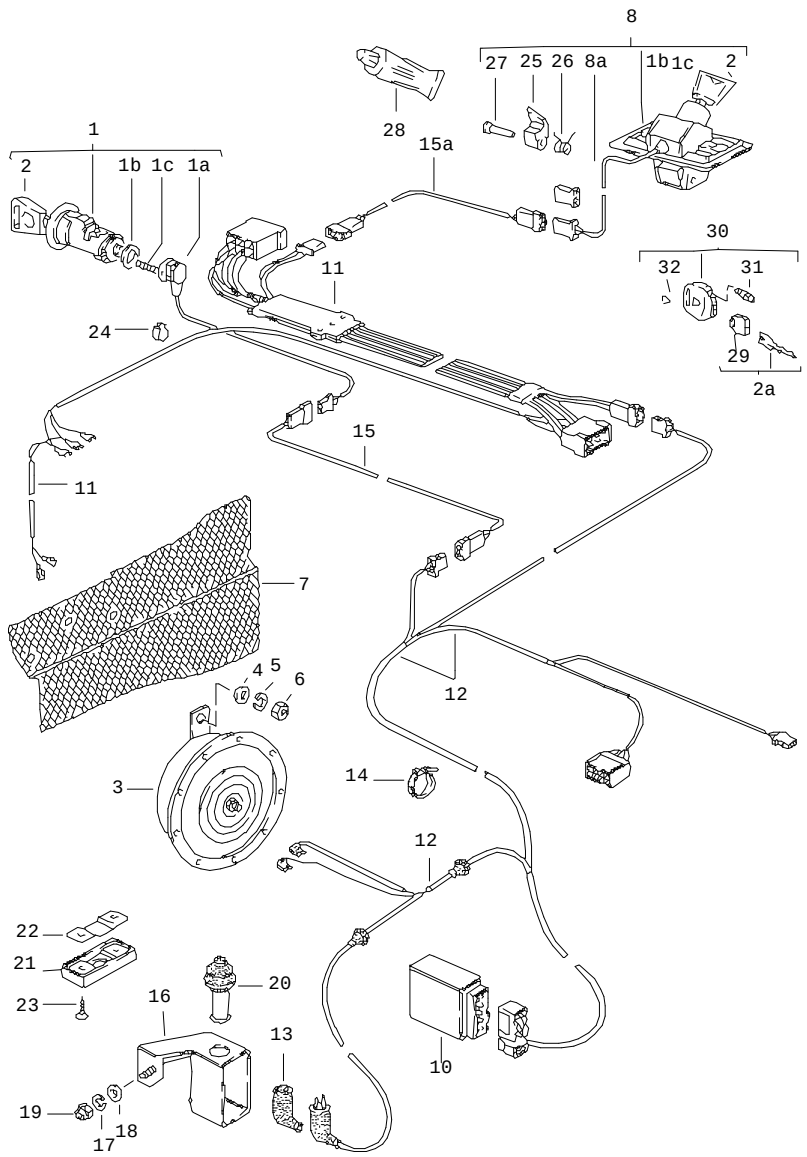

Pos	Part Number	Name	Remarks	Qty	Model
		alarm system			
1	928 537 906 02	door lock cylinder with switch with stipulated lock-no. with 1 key state lock number	/R	1 1	
1	928 537 905 02	door lock cylinder with switch with stipulated lock-no. with 1 key state lock number	/L	1 1	
1	928 537 908 02	door lock cylinder with w/o stipulated lock number switch with 1 key	/R	1	
1	928 537 907 02	door lock cylinder with switch w/o stipulated lock number with 1 key	/L	1	
(1A)	928 537 713 02	contact switch	/L	1	
1A	928 537 714 02	contact switch	/R	1	
1B	928 537 493 02	compression spring		3	
1C	928 537 495 03	gasket		3	
2	928 537 019 02	key with light state lock number	-85	2	
-	928 537 624 02	cover	-85	2	
-	928 537 625 02	plate	-85	2	
-	928 537 626 02	contact piece	-85	2	
-	928 537 627 02	pressure spring	-85	2	
-	928 537 628 02	knob	-85	2	
-	928 537 630 02	bulb	-85	2	

Pos	Part Number	Name	Remarks	Qty	Model
2	928 537 639 10	blank key state lock number with stipulated lock-no.	-85	1	
2A	928 538 032 02	key state lock number with stipulated lock-no.	86	3	
3	928 635 105 00	high volume horn		1	
4	900 025 008 09	washer A 10,5		1	
5	900 027 016 02	lock ring B 10		1	
6	N 011 010 6	hexagon nut M 10		1	
7	928 504 353 02	grille	/LL	1	
7	927 504 353 02	grille	/RL	1	
8	928 512 901 03	lid lock with stipulated lock-no. with 1 key state lock number		1	
8	928 512 903 03	lid lock upper part w/o stipulated lock number with 1 key		1	
8A	928 512 070 02	contact switch	/H	1	
9	171 971 999 B	terminal sleeve housing		3	
10	928 618 117 00	control unit	83	1	
(10)	928 637 104 00	control unit	84-	1	
10	928 618 117 01	control unit	-83	1	(CH)
(10)	928 637 104 01	control unit	84-	1	(CH)
11	928 612 008 04	wiring harness	-85	1	
(11)	928 612 008 06	wiring harness	86	1	
12	E 928 612 182 02	wiring harness	/LL -83	1	
(12)	928 612 182 03	wiring harness	/LL 84	1	
(12)	928 612 182 04	wiring harness	/LL 85-	1	
(12)	927 612 182 02	wiring harness	/RL -83	1	
(12)	927 612 182 03	wiring harness	/RL 84	1	
(12)	927 612 182 04	wiring harness	/RL 85-	1	
13	E 113 927 249	protection cap		1	
14	999 513 003 40	tie-wrap		4	
15	928 612 183 00	wiring harness door	/L/R	2	
15A	928 612 183 00	wiring harness rear lid	/RL	1	
(15A)	928 612 187 00	wiring harness rear lid	/LL	1	
16	928 637 101 01	switch housing	-84	1	
(16)	928 637 021 00	switch housing	85-	1	
17	N 012 005 3	lock ring B 5	-84	1	
18	N 011 665 3	washer A 5,3		1	
19	N 011 005 14	hexagon nut M 5		1	
20	928 613 173 00	contact switch		1	
21	928 637 121 00	protection cap		1	
22	928 637 123 00	plate		1	
23	N 014 098 6	tapping screw B 4,8 X 16		2	
24	999 591 465 02	cable clamp		2	
25	928 512 161 03	latch		1	
26	928 512 163 02	spring		1	
27	928 512 165 02	clinch pin		1	
28	000 043 204 21	grease for lock cylinder		1	
29	944 538 431 00	key cap	86	3	

Model	Year	MG	SG	Illustration	Restrictions	Update			
928	86	8	04	804-20		179	14:51	01.09.2004	PORSCHE PET PORSCHE

Pos	Part Number	Name	Remarks	Qty	Model	Pos	Part Number	Name	Remarks	Qty	Model
30	944 538 041 00	key lamp	86	2							
31	928 537 630 02	bulb		2							
32	944 538 443 00	emblem	86	2							
		- -- E N D -- -									

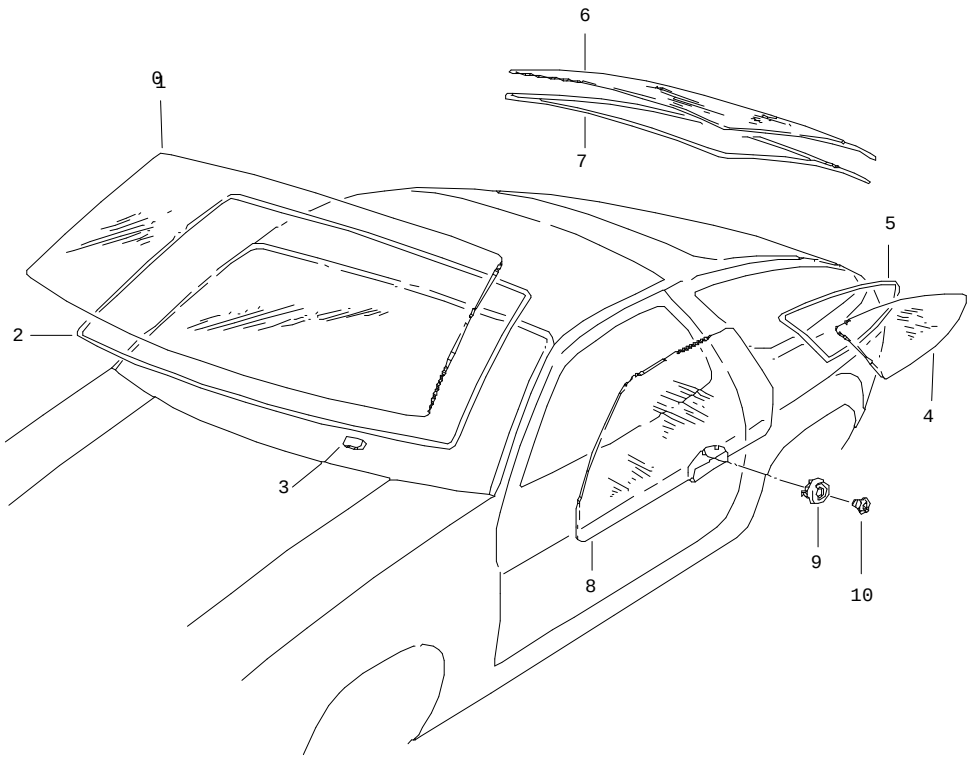

Pos	Part Number	Name	Remarks	Qty	Model
		windows			
1	928 541 011 06	windscreen clear	-84	1	
1	928 541 011 05	windscreen green tinted	-84	1	
(1)	928 541 017 00	windscreen sekuriflex green tinted	-84	1	(D)
(1)	928 541 011 07	windscreen upper part: dark green	-84	1	
(1)	928 541 017 01	windscreen sekuriflex upper part: dark green	-84	1	(D)
(1)	928 541 011 06	windscreen clear with antenna	85	1	
(1)	928 541 017 04	windscreen sekuriflex clear with antenna	85-	1	
(1)	928 541 015 04	windscreen tinted with antenna	85-	1	
(1)	928 541 015 04	windscreen sekuriflex tinted with antenna	85-	1	
(1)	928 541 016 05	windscreen upper part: dark green with antenna	85-	1	
(1)	928 541 016 05	windscreen sekuriflex upper part: dark green with antenna	85-	1	

Pos	Part Number	Name	Remarks	Qty	Model
-	E 911 541 112 02	film for stickers	85-	X	
-	E 911 541 112 02	film for stickers	85-	X	
2	477 898 011 A	adhesive set windscreen		1	
3	928 541 121 04	spacer		2	
4	928 543 105 08	side window tinted		1	M 470
(4)	928 543 105 09	side window tinted	/L	1	
(4)	928 543 106 08	side window tinted		1	M 470
(4)	928 543 106 09	side window tinted	/R	1	
5	928 543 037 04	sealing frame		1	
(5)	928 543 038 04	sealing frame without rear spoiler		1	
(5)	928 543 045 04	sealing frame	/L	1	
(5)	928 543 046 04	sealing frame with rear spoiler	/R	1	
6	928 545 018 03	rear window tinted		1	
6	928 545 018 02	rear window tinted		1	M 470
7	477 898 011 A	sealing set		1	
8	928 537 101 02	door glass tinted	/L	1	
(8)	928 537 102 02	door glass tinted	/R	1	
9	928 537 281 04	plug		4	
10	928 537 277 02	threaded piece		4	
		- -- E N D -- -			

Pos	Part Number	Name	Remarks	Qty	Model

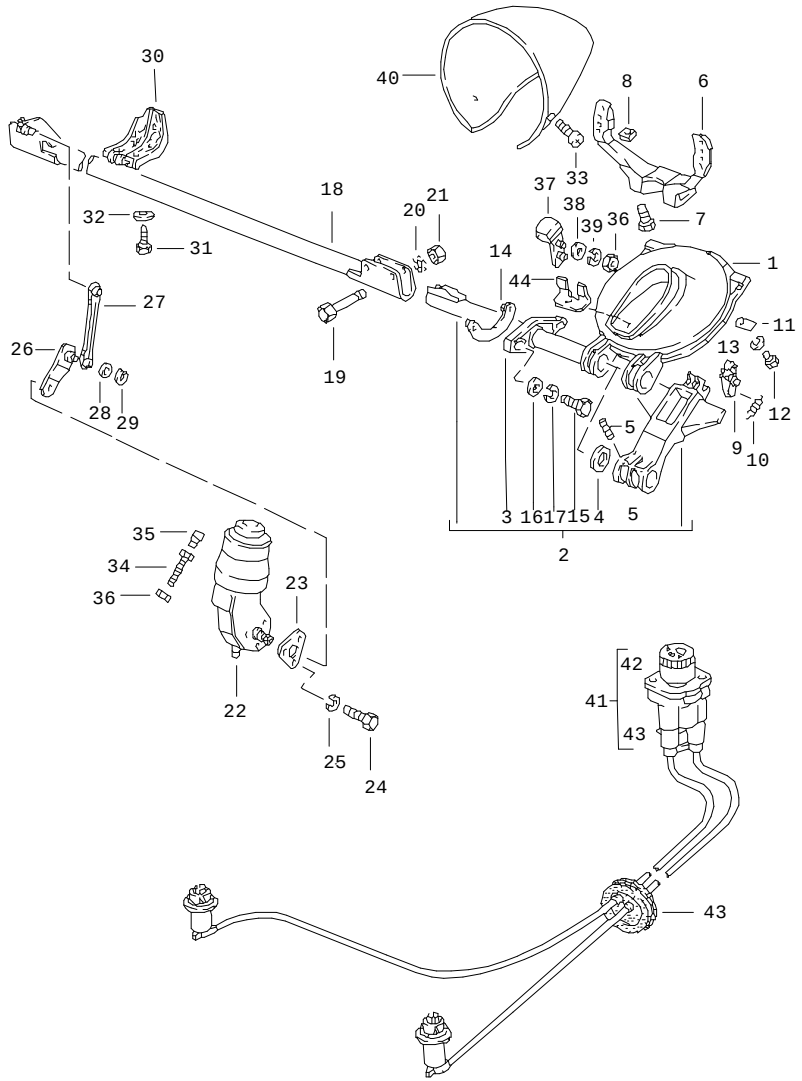

Pos	Part Number	Name	Remarks	Qty	Model
		pop-up headlight			
1	928 750 243 05	swivel frame		2	
2	928 750 097 05	driving arm	/L	1	
2	928 750 098 05	driving arm	/R	1	
3	928 750 211 04	bearing		2	
4	928 750 253 02	washer		4	
5	900 095 085 02	spiral clamping pin		4	
6	928 750 285 03	supporting arm		2	
7	900 067 011 02	pan-head screw M 6 X 20		4	
-	999 025 108 02	washer 6,5		4	
8	900 076 010 02	hexagon nut M 6		4	
9	928 750 079 02	locking segment		2	
10	928 750 291 02	tension spring		2	
11	928 750 325 02	plate		8	
12	999 015 004 02	screw AM 5 X 10		8	
13	N 012 222 4	spring washer A 5		8	
14	928 750 071 02	plate		2	
15	900 074 015 02	hexagon-head bolt M 6 X 30		4	
16	N 011 666 7	washer B 6,4		4	
17	N 012 222 4	spring washer B 6		4	
18	928 750 041 05	shaft		1	
19	900 075 343 02	hexagon-head bolt M 6 X 45		4	
20	999 025 093 09	washer		4	

Pos	Part Number	Name	Remarks	Qty	Model
21	900 910 012 02	lock nut M 6		4	
22	928 624 021 00	electric motor		1	
23	928 750 207 02	plate		1	
24	999 072 005 09	hexagon-head bolt M 6 X 12		3	
25	N 012 222 4	spring washer B 6		3	
26	928 750 065 03	lever		1	
27	928 750 067 02	push rod		1	
28	900 031 001 02	washer 8,4		2	
29	900 116 009 01	lock washer 6		2	
30	928 750 055 02	guide		1	
31	999 217 019 02	hexagon-head bolt M 6 X 12		2	
32	N 012 226 5	spring washer B6		2	
33	999 919 008 07	oval-head screw 3,9 X 13		2	
34	N 010 221 3	hexagon-head bolt M 6 X 35		2	
35	914 504 319 00	grommet		2	
36	900 076 010 02	hexagon nut M 6		2	
37	928 750 031 02	stop		2	
38	900 151 003 02	washer A 6,4		4	
39	N 012 006 4	lock ring B 6		4	
40	928 750 083 02	housing		2	
(41)	928 631 220 01	governor headlight levelling system manually adjustable		1	
42	928 631 221 01	rotary knob		1	
-	928 631 223 02	rose		1	
-	928 799 750 07	tension spring		2	
43	927 631 224 01	grommet		1	
44	928 750 255 05	bracket		2	

- -- E N D -- -

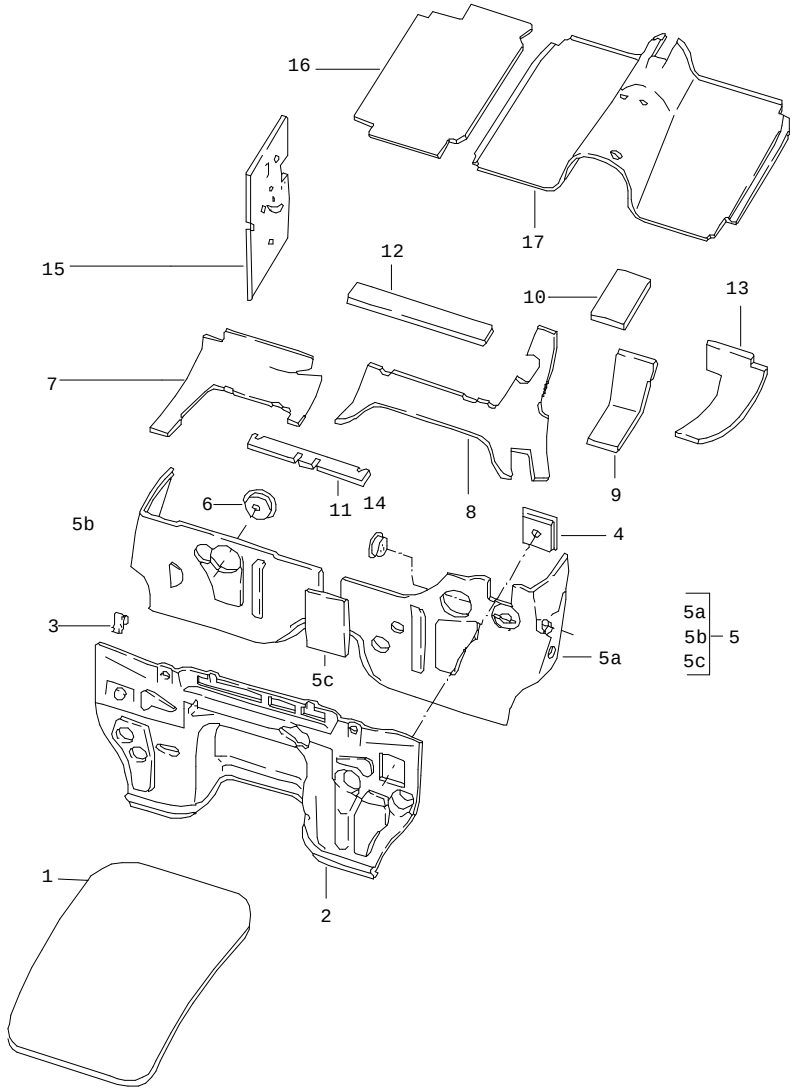

Pos	Part Number	Name	Remarks	Qty	Model
		body sound proofing 1			
1	928 556 285 02	insulation bonnet	/H	1	
2	928 556 089 03	insulation	/LL	1	
2	928 556 089 06	insulation	/LL 86	1	
(2)	927 556 089 02	insulation	/RL -85	1	
(2)	927 556 089 05	insulation engine compartment	/RL 86	1	
3	928 556 295 02	clamp		7	
4	928 556 057 03	insert firewall		1	
5	928 556 051 03	insulation firewall F >>92DS8 41048 F >>92DS8 49562	/LL	1	 (J)
5A	928 556 061 04	sound absorber	/LL/L	1	
5B	928 556 062 06	sound absorber firewall F 92DS8 41049>> F 92DS8 49563>>	/LL/R	1	 (J)
5C	928 556 065 03	insulation firewall F 92DS8 41049>> F 92DS8 49563>>		1	 (J)
5	927 556 041 03	insulation firewall F >>92DS8 41048	/RL	1	
(5A)	927 556 061 04	sound absorber firewall F 92DS8 41049>>	/RL/L	1	
(5B)	927 556 062 02	insulation firewall F 92DS8 41049>>	/RL/R	1	
6	928 556 063 05	insert firewall	-84	1	
(6)	928 556 063 05	insert firewall	85-	1	

Pos	Part Number	Name	Remarks	Qty	Model
7	928 556 155 04	insulation	/LL	1	
(7)	927 556 155 03	insulation cross panel	/RL	1	
8	928 556 159 06	insulation	/LL	1	
(8)	927 556 159 04	insulation cross panel	/RL	1	
9	928 556 169 04	insert	/LL	1	
9	927 556 169 03	insert steering	/RL	1	
10	928 556 171 04	insert brake booster		1	
11	928 556 267 02	insulation cross panel		1	
12	928 556 387 03	insulation heater		1	
13	928 556 173 05	insulation	/LL	1	
13	927 556 173 03	insulation cross panel	/RL	1	
14	928 556 075 02	insert	/RL	1	
14	928 556 075 06	insert headlight levelling system	/LL	1	
15	928 556 353 02	insulation	/LL/L	1	
15	928 556 354 02	insulation side section	/R	1	
15	927 556 353 02	insulation side section	/RL/L	1	
(16)	928 556 291 03	insulation	/LL/L-84	1	
(16) E	928 556 291 05	insulation	/LL/L 85	1	
(16) E	928 556 291 05	insulation	/LL/L 86	1	
(16)	927 556 291 02	insulation	/RL/L-84	1	
(16)	927 556 291 03	sound absorber floor	/RL/L85-	1	
16	928 556 292 02	insulation	/LL/R-84	1	
16	928 556 292 03	sound absorber floor	/LL/R85-	1	
(16) A	927 556 292 05	insulation	/RL/R-84	1	
(16)	927 556 292 04	sound absorber	/RL/R 85	1	
(16)	927 556 292 05	insulation floor	/RL/R 86	1	
17	928 556 031 02	insulation tunnel		1	

- -- E N D -- -

Model	Year	MG	SG	Illustration	Restrictions	Update				
928	86	8	07	807-01		179	14:52	01.09.2004	PORSCHE	PET	PORSCHE

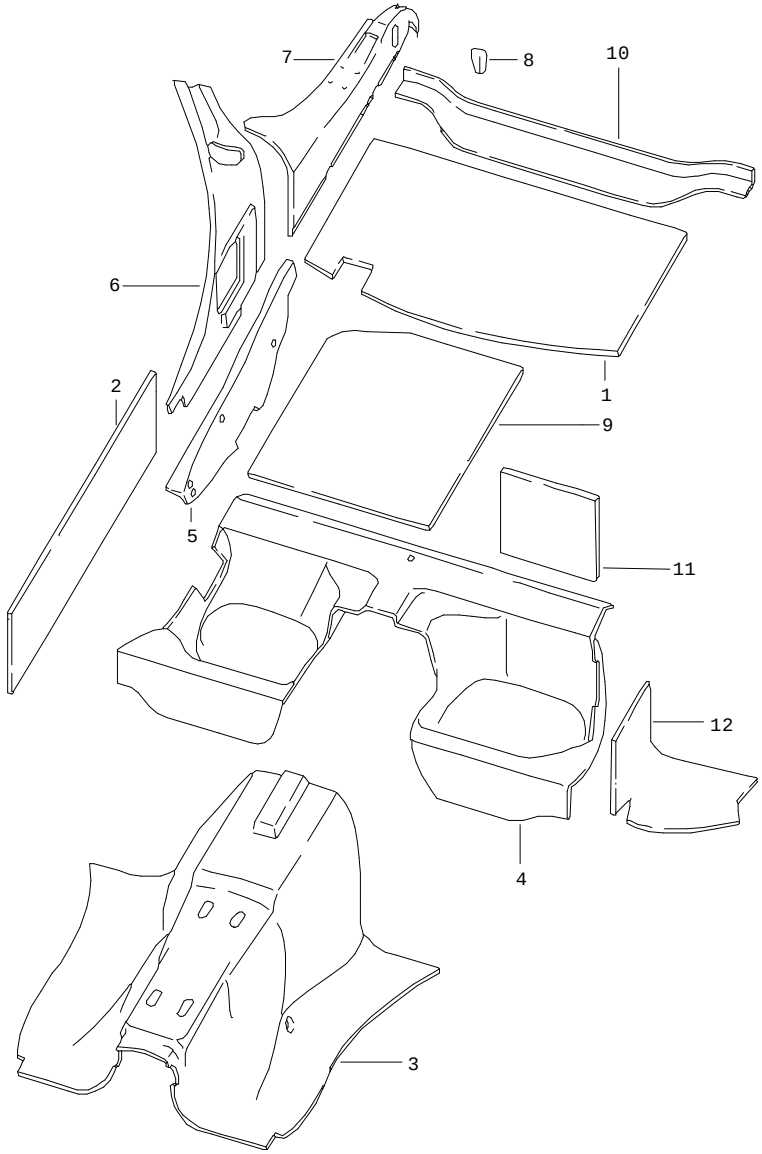

Pos	Part Number	Name	Remarks	Qty	Model
		body sound proofing 2			
1	928 556 233 02	insulation roof		1	
2	928 556 235 02	insulation door		2	
3	928 556 033 02	insulation	-83	1	
3	928 556 033 03	insulation	-83	1	AUT.
3	928 556 033 03	insulation	84	1	
(3)	928 556 033 06	insulation	85	1	
(3)	928 556 033 06	insulation	86	1	
4	928 556 055 02	insulation	-84	1	
(4)	928 556 055 03	insulation	85	1	
(4)	928 556 055 04	insulation	86	1	
5	928 556 205 02	insulation	/LL/L	1	
5	928 556 206 02	insulation	/LL/R	1	
5	927 556 205 03	insulation	/RL/L	1	
5	E 927 556 206 03	insulation bracket	/RL/R	1	
6	928 556 261 05	insulation	/V/L	1	
6	928 556 262 05	insulation side section	/V/R	1	
7	928 556 251 03	insulation	/H/L	1	
7	928 556 252 03	insulation side section	/H/R	1	
8	928 556 265 02	insert side section		1	
9	928 556 239 02	insulation boot floor plate		1	
10	E 928 556 289 02	insulation terminal piece		1	

Pos	Part Number	Name	Remarks	Qty	Model	Pos	Part Number	Name	Remarks	Qty	Model
11	928 556 271 02	insulation seat well		2							
12	928 556 273 02	insulation	/L	1							
12	928 556 274 02	insulation seat well	/R	1							
		- -- E N D -- -									

Model	Year	MG	SG	Illustration	Restrictions	Update				
928	86	8	07	807-05		179	14:52	01.09.2004	PORSCHE	PET	PORSCHE

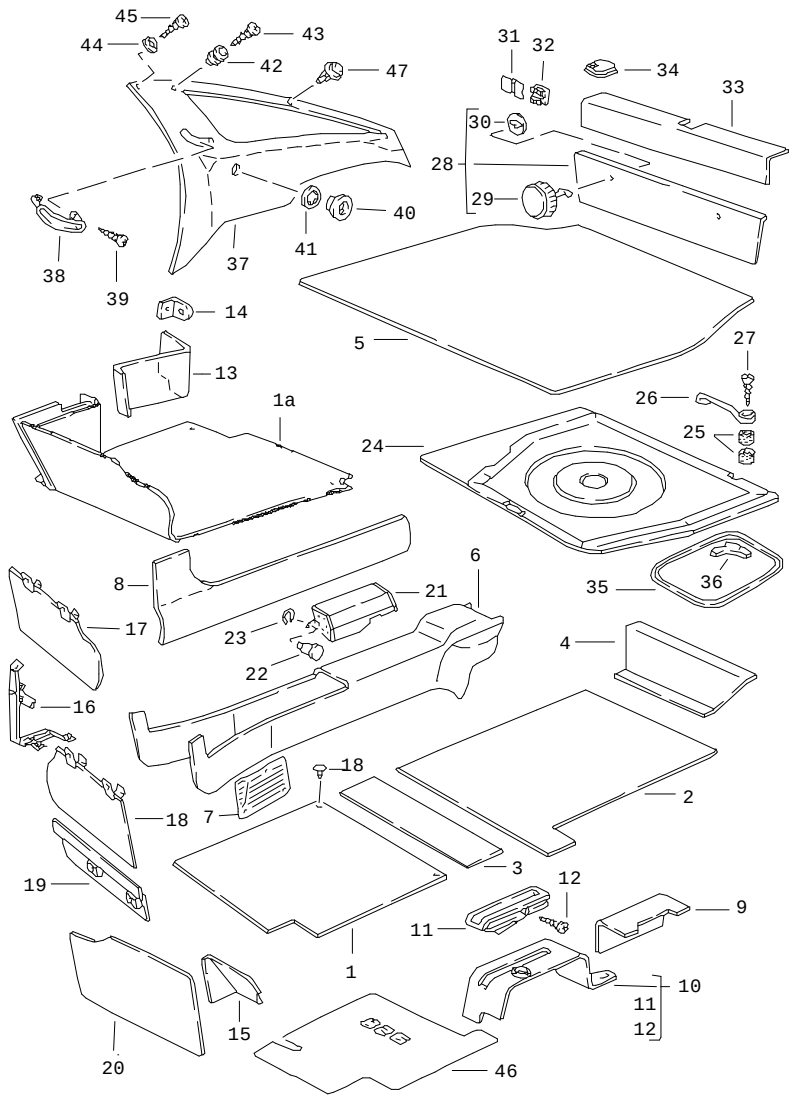

Pos	Part Number	Name	Remarks	Qty	Model
		linings			
1	928 551 011 03	carpet	/LL/L 83	1	
	70E	black			
	30B	blue			
	40E	brown			
	2FL	grey-beige			
	60A	grey			
	80E	burgundy			
	80S	can-can-red			
	6JD	dark green			
	1VD	champagne			
(1)	928 551 012 03	carpet	/LL/R 83	1	
	70E	black			
	30B	blue			
	40E	brown			
	2FL	grey-beige			
	60A	grey			
	80E	burgundy			
	80S	can-can-red			
	6JD	dark green			
	1VD	champagne			
(1)	927 551 011 03	carpet	/RL/L 83	1	
	70E	black			
	30B	blue			
	40E	brown			
	2FL	grey-beige			
	60A	grey			

Pos	Part Number	Name	Remarks	Qty	Model
	80E	burgundy			
	80S	can-can-red			
	6JD	dark green			
	1VD	champagne			
(1)	927 551 012 03	carpet	/RL/R 83	1	
	70E	black			
	30B	blue			
	40E	brown			
	2FL	grey-beige			
	60A	grey			
	80E	burgundy			
	80S	can-can-red			
	6JD	dark green			
	1VD	champagne			
(1)	928 551 011 04	carpet	/LL/L 84	1	
	70E	black			
	30B	blue			
	40E	brown			
	2FL	grey-beige			
	60A	grey			
	80E	burgundy			
	80S	can-can-red			
	6JD	dark green			
	1VD	champagne			
1A	928 551 010 04	carpet	/LL/R 84	1	
	70E	black			
	30B	blue			
	40E	brown			
	2FL	grey-beige			
	60A	grey			
	80E	burgundy			
	80S	can-can-red			
	6JD	dark green			
	1VD	champagne			
(1A)	927 551 009 04	carpet	/RL/L 84	1	
	70E	black			
	30B	blue			
	40E	brown			
	2FL	grey-beige			
	60A	grey			
	80E	burgundy			
	80S	can-can-red			
	6JD	dark green			
	1VD	champagne			
(1)	927 551 012 04	carpet	/RL/R 84	1	
	70E	black			
	30B	blue			
	40E	brown			
	2FL	grey-beige			
	60A	grey			
	80E	burgundy			
	80S	can-can-red			
	6JD	dark green			
	1VD	champagne			

Pos	Part Number	Name	Remarks	Qty	Model
(1)	928 551 011 05	carpet	/LL/L 85	1	
	70E	black			
	30B	blue			
	40E	brown			
	80E	burgundy			
	8JK	greyish green			
	80S	can-can-red			
	6JD	dark green			
	1VD	champagne			
	2YN	white			
	60A	grey			
(1)	928 551 011 06	carpet	/LL/L86-	1	
	70E	black			
	30B	blue			
	40E	brown			
	80E	burgundy			
	8JK	greyish green			
	2FL	grey-beige	86		
	80S	can-can-red			
	6JD	dark green			
	1VD	champagne			
	2YN	white			
	60A	grey			
1A	928 551 010 05	carpet	/LL/R85-	1	
	70E	black			
	30B	blue			
	40E	brown			
	80E	burgundy			
	8JK	greyish green			
	2FL	grey-beige	86		
	80S	can-can-red			
	6JD	dark green			
	1VD	champagne			
	2YN	white			
	60A	grey			
(1A)	927 551 009 05	carpet	/RL/L85-	1	
	70E	black			
	30B	blue			
	40E	brown			
	80E	burgundy			
	8JK	greyish green			
	2FL	grey-beige	86		
	80S	can-can-red			
	6JD	dark green			
	1VD	champagne			
	2YN	white			
	60A	grey			
(1)	927 551 012 05	carpet	/RL/R 85	1	
	70E	black			
	30B	blue			
	40E	brown			
	80E	burgundy			
	8JK	greyish green			
	80S	can-can-red			

Pos	Part Number	Name	Remarks	Qty	Model
	6JD	dark green			
	1VD	champagne			
	2YN	white			
	60A	grey			
(1)	927 551 012 06	carpet	/RL/R 86	1	
	70E	black			
	30B	blue			
	40E	brown			
	80E	burgundy			
	8JK	greyish green			
	2FL	grey-beige	86		
	80S	can-can-red			
	6JD	dark green			
	1VD	champagne			
	2YN	white			
	60A	grey			
1B	N 900 685 01	rotary knob	84-	4	
2	928 551 013 04	carpet	/L -84	1	
	70E	black			
	40E	brown			
	30B	blue			
	2FL	grey-beige			
	60A	grey			
	80E	burgundy			
	80S	can-can-red			
	6JD	dark green			
	1VD	champagne			

Pos	Part Number	Name	Remarks	Qty	Model
(2)	928 551 014 04	carpet	/R -84	1	
	70E	black			
	40E	brown			
	30B	blue			
	2FL	grey-beige			
	60A	grey			
	80E	burgundy			
	80S	can-can-red			
	6JD	dark green			
	1VD	champagne			
(2)	928 551 013 05	carpet	/L 85	1	
	70E	black			
	30B	blue			
	40E	brown			
	80E	burgundy			
	8JK	greyish green			
	80S	can-can-red			
	6JD	dark green			
	1VD	champagne			
	2YN	white			
	60A	grey			
(2)	928 551 014 05	carpet	/R 85	1	
	70E	black			
	30B	blue			
	40E	brown			
	80E	burgundy			
	8JK	greyish green			

Pos	Part Number	Name	Remarks	Qty	Model
	80S	can-can-red			
	6JD	dark green			
	1VD	champagne			
	2YN	white			
	60A	grey			
(2)	928 551 014 06	carpet	/R 85	1	M 570
	70E	black			
	30B	blue			
	40E	brown			
	80E	burgundy			
	8JK	greyish green			
	80S	can-can-red			
	6JD	dark green			
	1VD	champagne			
	2YN	white			
	60A	grey			
(2)	928 551 013 07	carpet	/LL/L 86	1	
	70E	black			
	40E	brown			
	30B	blue			
	8JK	greyish green			
	60A	grey			
	80E	burgundy			
	2FL	grey-beige			
	80S	can-can-red			
	6JD	dark green			
	1VD	champagne			
	2YN	white			
(2)	928 551 014 07	carpet	/LL/R 86	1	
	70E	black			
	40E	brown			
	30B	blue			
	8JK	greyish green			
	60A	grey			
	80E	burgundy			
	2FL	grey-beige			
	80S	can-can-red			
	6JD	dark green			
	1VD	champagne			
	2YN	white			
(2)	927 551 013 03	carpet	/RL/L 86	1	
	70E	black			
	40E	brown			
	30B	blue			
	8JK	greyish green			
	60A	grey			
	80E	burgundy			
	2FL	grey-beige			
	80S	can-can-red			
	6JD	dark green			
	1VD	champagne			
	2YN	white			
(2)	927 551 014 03	carpet	/RL/R 86	1	
	70E	black			

Pos	Part Number	Name	Remarks	Qty	Model
	40E	brown			
	30B	blue			
	8JK	greyish green			
	60A	grey			
	80E	burgundy			
	2FL	grey-beige			
	80S	can-can-red			
	6JD	dark green			
	1VD	champagne			
	2YN	white			
3	928 551 145 02	lining seat rail support	/L -84	1	
	70E	black			
	40E	brown			
	30B	blue			
	2FL	grey-beige			
	60A	grey			
	80E	burgundy			
	80S	can-can-red			
	6JD	dark green			
	1VD	champagne			
(3)	928 551 146 02	lining seat rail support	/R -84	1	
	70E	black			
	40E	brown			
	30B	blue			
	2FL	grey-beige			
	60A	grey			
	80E	burgundy			
	80S	can-can-red			
	6JD	dark green			
	1VD	champagne			
4	928 551 057 02	lining heel plate	/LL/L-85	1	
	70E	black			
	40E	brown			
	30B	blue			
	2FL	grey-beige	-84		
	8JK	greyish green	85-		
	60A	grey			
	80E	burgundy			
	80S	can-can-red			
	6JD	dark green			
	1VD	champagne			
	2YN	white	85		
(4)	928 551 058 02	lining heel plate	/LL/R-85	1	
	70E	black			
	40E	brown			
	30B	blue			
	2FL	grey-beige	-84		
	8JK	greyish green	85-		
	60A	grey			
	80E	burgundy			
	80S	can-can-red			
	6JD	dark green			

Pos	Part Number	Name	Remarks	Qty	Model
	1VD	champagne			
	2YN	white	85		
4	927 551 057 02	lining heel plate	/RL/L-85	1	
	70E	black			
	40E	brown			
	30B	blue			
	2FL	grey-beige	-84		
	8JK	greyish green	85-		
	60A	grey			
	80E	burgundy			
	80S	can-can-red			
	6JD	dark green			
	1VD	champagne			
	2YN	white	85		
(4)	927 551 058 02	lining heel plate	/RL/R-85	1	
	70E	black			
	40E	brown			
	30B	blue			
	2FL	grey-beige	-84		
	8JK	greyish green	85-		
	60A	grey			
	80E	burgundy			
	80S	can-can-red			
	6JD	dark green			
	1VD	champagne			
	2YN	white	85		

Pos	Part Number	Name	Remarks	Qty	Model
(4)	928 551 057 03	lining heel plate	/L 86	1	
	70E	black			
	40E	brown			
	30B	blue			
	8JK	greyish green			
	60A	grey			
	80E	burgundy			
	2FL	grey-beige			
	80S	can-can-red			
	6JD	dark green			
	1VD	champagne			
	2YN	white			
(4)	928 551 058 03	lining heel plate	/R 86	1	
	70E	black			
	40E	brown			
	30B	blue			
	8JK	greyish green			
	60A	grey			
	80E	burgundy			
	2FL	grey-beige			
	80S	can-can-red			
	6JD	dark green			
	1VD	champagne			
	2YN	white			
5	928 551 061 03	boot floor carpet		1	
	70E	black			

Pos	Part Number	Name	Remarks	Qty	Model
	30B	blue			
	40E	brown			
	2FL	grey-beige	-84,86		
	8JK	greyish green	85-		
	60A	grey			
	80E	burgundy			
	80S	can-can-red			
	6JD	dark green			
	1VD	champagne			
	2YN	white	85-		
(5)	928 551 061 05	boot floor carpet	85-	1	(AUS)
	70E	black			
	30B	blue			
	40E	brown			
	80E	burgundy			
	8JK	greyish green			
	2FL	grey-beige	86		
	80S	can-can-red			
	6JD	dark green			
	1VD	champagne			
	2YN	white			
	60A	grey			
6	928 551 113 02	lining tunnel	-84	1	
	70E	black			
	40E	brown			
	30B	blue			
	2FL	grey-beige			
	60A	grey			
	80E	burgundy			
	80S	can-can-red			
	6JD	dark green			
	1VD	champagne			
(6)	928 551 113 03	lining tunnel	-84	1	AUT.
	70E	black			
	40E	brown			
	30B	blue			
	2FL	grey-beige			
	60A	grey			
	80E	burgundy			
	80S	can-can-red			
	6JD	dark green			
	1VD	champagne			
(6)	928 551 113 05	lining tunnel	85-	1	
	70E	black			
	40E	brown			
	30B	blue			
	8JK	greyish green			
	60A	grey			
	80E	burgundy			
	2FL	grey-beige	86		
	80S	can-can-red			
	6JD	dark green			
	1VD	champagne			

Pos	Part Number	Name	Remarks	Qty	Model
	2YN	white			
7	928 551 137 02	scuff plate	/LL	1	
(8)	928 551 031 02	lining side member	/LL/L-84	1	
	70E	black			
	40E	brown			
	30B	blue			
	2FL	grey-beige			
	60A	grey			
	80E	burgundy			
	80S	can-can-red			
	6JD	dark green			
	1VD	champagne			
8	928 551 032 03	lining side member	/LL/R 83	1	
	70E	black			
	40E	brown			
	30B	blue			
	2FL	grey-beige			
	60A	grey			
	80E	burgundy			
	80S	can-can-red			
	6JD	dark green			
	1VD	champagne			
(8)	928 551 032 06	lining side member	/LL/R 84	1	
	70E	black			
	40E	brown			
	30B	blue			
	2FL	grey-beige			
	60A	grey			
	80E	burgundy			
	80S	can-can-red			
	6JD	dark green			
	1VD	champagne			
(8)	927 551 031 02	lining side member	/RL/L 83	1	
	70E	black			
	40E	brown			
	30B	blue			
	2FL	grey-beige			
	60A	grey			
	80E	burgundy			
	80S	can-can-red			
	6JD	dark green			
	1VD	champagne			
(8)	927 551 031 04	lining side member	/RL/L 84	1	
	70E	black			
	40E	brown			
	30B	blue			
	2FL	grey-beige			
	60A	grey			
	80E	burgundy			
	80S	can-can-red			
	6JD	dark green			
	1VD	champagne			

Pos	Part Number	Name	Remarks	Qty	Model
(8)	927 551 032 02	lining side member	/RL/R-84	1	
	70E	black			
	40E	brown			
	30B	blue			
	2FL	grey-beige			
	60A	grey			
	80E	burgundy			
	80S	can-can-red			
	6JD	dark green			
	1VD	champagne			
(8)	928 551 031 07	lining side member	/L 85-	1	
	70E	black			
	30B	blue			
	40E	brown			
	80E	burgundy			
	8JK	greyish green			
	2FL	grey-beige	86		
	80S	can-can-red			
	6JD	dark green			
	1VD	champagne			
	2YN	white			
	60A	grey			
(8)	928 551 032 07	lining side member	/R 85-	1	
	70E	black			
	30B	blue			
	40E	brown			
	80E	burgundy			
	8JK	greyish green			
	2FL	grey-beige	86		
	80S	can-can-red			
	6JD	dark green			
	1VD	champagne			
	2YN	white			
	60A	grey			
9	928 551 091 02	lining parking-brake cable	/LL	1	
	70E	black			
	40E	brown			
	30B	blue			
	2FL	grey-beige	-84,86		
	8JK	greyish green	85-		
	60A	grey			
	80E	burgundy			
	80S	can-can-red			
	6JD	dark green			
	1VD	champagne			
	2YN	white	85-		
9	927 551 091 02	lining parking-brake cable	/RL	1	
	70E	black			
	40E	brown			
	30B	blue			
	2FL	grey-beige	-84,86		
	8JK	greyish green	85-		

Pos	Part Number	Name	Remarks	Qty	Model
	60A	grey			
	80E	burgundy			
	80S	can-can-red			
	6JD	dark green			
	1VD	champagne			
	2YN	white	85-		
10	928 551 089 04	lining handbrake	/LL	1	
	70E	black			
	40E	brown			
	30B	blue			
	2FL	grey-beige	-84,86		
	8JK	greyish green	85-		
	60A	grey			
	80E	burgundy			
	80S	can-can-red			
	6JD	dark green			
	1VD	champagne			
	2YN	white	85-		
10	928 551 089 05	lining handbrake	/LL	1	(J)
	70E	black			
	40E	brown			
	30B	blue			
	2FL	grey-beige	-84,86		
	8JK	greyish green	85-		
	60A	grey			
	80E	burgundy			
	80S	can-can-red			
	6JD	dark green			
	1VD	champagne			
	2YN	white	85-		
10	927 551 089 04	lining handbrake	/RL	1	
	70E	black			
	40E	brown			
	30B	blue			
	2FL	grey-beige	-84,86		
	8JK	greyish green	85-		
	60A	grey			
	80E	burgundy			
	80S	can-can-red			
	6JD	dark green			
	1VD	champagne			
	2YN	white	85-		
11	928 551 325 02	rose		1	
12	900 143 001 02	tapping screw B 2,9 X 6,5		2	
13	928 551 069 02	lining first-aid kit	/LL -83	1	
	70E	black			
	40E	brown			
	30B	blue			
	2FL	grey-beige			
	60A	grey			
	80E	burgundy			
	80S	can-can-red			

Pos	Part Number	Name	Remarks	Qty	Model
	6JD	dark green			
	1VD	champagne			
(13)	927 551 069 02	lining first-aid kit	/RL -83	1	
	70E	black			
	40E	brown			
	30B	blue			
	2FL	grey-beige			
	60A	grey			
	80E	burgundy			
	80S	can-can-red			
	6JD	dark green			
	1VD	champagne			
14	928 551 087 02	plate	-83	1	
(14)	928 551 087 03	plate	84-	1	
15	928 551 035 02	lining foot support	/LL	1	
	70E	black			
	40E	brown			
	30B	blue			
	2FL	grey-beige	-84,86		
	8JK	greyish green	85-		
	60A	grey			
	80E	burgundy			
	80S	can-can-red			
	6JD	dark green			
	1VD	champagne			
	2YN	white	85-		

Pos	Part Number	Name	Remarks	Qty	Model
(15)	927 551 036 02	lining foot support	/RL	1	
	70E	black			
	40E	brown			
	30B	blue			
	2FL	grey-beige	-84,86		
	8JK	greyish green	85-		
	60A	grey			
	80E	burgundy			
	80S	can-can-red			
	6JD	dark green			
	1VD	champagne			
	2YN	white	85-		
16	928 551 073 04	clip	/LL -84	2	
16	928 551 073 06	clip	/LL 85-	2	
(16)	927 551 073 03	clip	/RL -84	2	
(16)	927 551 073 04	clip	/RL 85-	2	
17	927 799 551 07	foot support	/RL 83	1	
(17)	927 551 062 05	foot support	/RL 84-	1	
18	928 799 551 10	foot support	/LL 83	1	
(18)	928 551 062 04	foot support	/LL 84	1	
(18)	928 551 062 05	foot support upper part	/LL 85-	1	
19	928 551 066 02	foot support	/LL 83	1	
(19)	928 551 066 03	foot support lower part	/LL 84-	1	
20	928 551 049 02	lining firewall	/LL	1	
	70E	black			

Pos	Part Number	Name	Remarks	Qty	Model
	40E	brown			
	30B	blue			
	2FL	grey-beige	-84,86		
	8JK	greyish green	85-		
	60A	grey			
	80E	burgundy			
	80S	can-can-red			
	6JD	dark green			
	1VD	champagne			
	2YN	white	85-		
(20)	927 551 050 02	lining firewall	/RL	1	
	70E	black			
	40E	brown			
	30B	blue			
	2FL	grey-beige	-84,86		
	8JK	greyish green	85-		
	60A	grey			
	80E	burgundy			
	80S	can-can-red			
	6JD	dark green			
	1VD	champagne			
	2YN	white	85-		
21	928 551 505 03	cover	/LL	1	
	70E	black			
	40E	brown			
	30B	blue			
	2FL	grey-beige	-84,86		
	8JK	greyish green	85-		
	60A	grey			
	80E	burgundy			
	80S	can-can-red			
	6JD	dark green			
	1VD	champagne			
	2YN	white	85-		
(21)	927 551 505 03	cover	/RL	1	
	70E	black			
	40E	brown			
	30B	blue			
	2FL	grey-beige	-84,86		
	8JK	greyish green	85-		
	60A	grey			
	80E	burgundy			
	80S	can-can-red			
	6JD	dark green			
	1VD	champagne			
	2YN	white	85-		
22	900 253 005 07	knurled screw M 6 X 10		2	
23	N 012 406 2	circlip 6 X 0,7		2	
24	928 556 045 03	spare wheel covering		1	
-	171 860 273 A	retaining strap		1	
25	928 555 615 02	spacer sleeve		8	
26	477 885 761	holder		4	
27	900 269 050 07	countersunk-head screw M 5 X 25		8	

Pos	Part Number	Name	Remarks	Qty	Model
28	928 551 081 06	plate for tools		1	
	70E	black			
	40E	brown			
	30B	blue			
	2FL	grey-beige	-84,86		
	8JK	greyish green	85-		
	60A	grey			
	80E	burgundy			
	80S	can-can-red			
	6JD	dark green			
	1VD	champagne			
	2YN	white	85-		
29	928 551 221 02	knob		2	
30	999 591 483 40	lock washer		2	
31	928 551 199 02	cap		2	
32	928 551 203 02	cam		2	
33	928 551 653 02	lining terminal piece		1	
	70E	black			
	40E	brown			
	30B	blue			
	2FL	grey-beige	-84,86		
	8JK	greyish green	85-		
	60A	grey			
	80E	burgundy			
	80S	can-can-red			
	6JD	dark green			
	1VD	champagne			
	2YN	white	85-		
(34)	928 551 185 02	rubber stop	/L	1	
34	928 551 186 02	rubber stop	/R	1	
35	928 504 105 02	gasket cover		1	
36	928 504 107 02	sealing rubber battery cover		1	
(37)	A 928 555 021 04	side trim panel with loudspeaker opening leatherette	/LL/L-85	1	
	05T	black			
	1HH	blue			
	4RB	brown			
	3MX	burgundy			
	5FX	grey-beige	-84,86		
	4JX	greyish green	85-		
(37)	A 927 555 021 04	side trim panel with loudspeaker opening leatherette	/RL/L-85	1	
	05T	black			
	1HH	blue			
	4RB	brown			
	3MX	burgundy			
	5FX	grey-beige	-84,86		
	4JX	greyish green	85-		
(37)	A 927 555 021 04	side trim panel with loudspeaker opening leatherette	/L 86	1	
	05T	black			
	1HH	blue			
	4RB	brown			

Pos	Part Number	Name	Remarks	Qty	Model
	3MX	burgundy			
	5FX	grey-beige	-84,86		
	4JX	greyish green	85-		
37	A 928 555 022 04	side trim panel with loudspeaker opening leatherette	/R	1	
	05T	black			
	1HH	blue			
	4RB	brown			
	3MX	burgundy			
	5FX	grey-beige	-84,86		
	4JX	greyish green	85-		
(37)	928 555 021 07	side trim panel with loudspeaker opening leatherette	/L	1	
	05T	black			
	1HH	blue			
	4RB	brown			
	3MX	burgundy			
	5FX	grey-beige			
	4JX	greyish green			
37	928 555 022 07	side trim panel with loudspeaker opening leatherette	/R	1	
	05T	black			
	1HH	blue			
	4RB	brown			
	3MX	burgundy			
	5FX	grey-beige			
	4JX	greyish green			
(37)	928 555 921 00	side trim panel with loudspeaker opening leatherette	/L	1	M 490
	05T	black			
	1HH	blue			
	4RB	brown			
	3MX	burgundy			
	5FX	grey-beige			
	4JX	greyish green			
(37)	928 555 922 00	side trim panel with loudspeaker opening leatherette	/R	1	M 490
	05T	black			
	1HH	blue			
	4RB	brown			
	3MX	burgundy			
	5FX	grey-beige			
	4JX	greyish green			
(37)	927 555 021 52	side trim panel with loudspeaker opening leather F >>92GS8 40110 F >>92GS8 49562	/L	1	 (J)
	KZ2	black			
	KZ3	blue			
	4RB	brown			
	LG7	burgundy			
	KZ4	grey-beige	-84,86		
	QC2	greyish green	85-		
	LG6	dark green			
	LG4	pearl white			

Pos	Part Number	Name	Remarks	Qty	Model
	LG5	champagne			
	KZ6	can-can-red			
	PY9	ocean blue	85-		
	PZ1	wild buffalo	85-		
(37)	928 555 022 52	side trim panel with loudspeaker opening leather F >>92GS8 40110 F >>92GS8 49562	/R	1	(J)
	KZ2	black			
	KZ3	blue			
	4RB	brown			
	LG7	burgundy			
	KZ4	grey-beige	-84,86		
	QC2	greyish green	85-		
	LG6	dark green			
	LG4	pearl white			
	LG5	champagne			
	KZ6	can-can-red			
	PY9	ocean blue	85-		
	PZ1	wild buffalo	85-		
(37)	928 555 021 54	side trim panel with loudspeaker opening leather	/LL/L-85	1	M 490
	KZ2	black			
	KZ3	blue			
	4RB	brown			
	LG7	burgundy			
	KZ4	grey-beige	-84,86		
	QC2	greyish green	85-		
	LG6	dark green			
	LG4	pearl white			
	LG5	champagne			
	KZ6	can-can-red			
	PY9	ocean blue	85-		
	PZ1	wild buffalo	85-		
(37)	927 555 021 54	side trim panel with loudspeaker opening leather	/RL/L-85	1	M 490
	KZ2	black			
	KZ3	blue			
	4RB	brown			
	LG7	burgundy			
	KZ4	grey-beige	-84,86		
	QC2	greyish green	85-		
	LG6	dark green			
	LG4	pearl white			
	LG5	champagne			
	KZ6	can-can-red			
	PY9	ocean blue	85-		
	PZ1	wild buffalo	85-		
(37)	927 555 021 54	side trim panel with loudspeaker opening leather F >>92GS8 40110 F >>92GS8 49562	/L 86	1	M 490 (J)
	KZ2	black			
	KZ3	blue			
	4RB	brown			
	LG7	burgundy			

Pos	Part Number	Name	Remarks	Qty	Model
	KZ4	grey-beige	-84,86		
	QC2	greyish green	85-		
	LG6	dark green			
	LG4	pearl white			
	LG5	champagne			
	KZ6	can-can-red			
	PY9	ocean blue	85-		
	PZ1	wild buffalo	85-		
(37)	928 555 022 54	side trim panel with loudspeaker opening leather F >>92GS8 40110 F >>92GS8 49562	/R 86	1	M 490 (J)
	KZ2	black			
	KZ3	blue			
	4RB	brown			
	LG7	burgundy			
	KZ4	grey-beige	-84,86		
	QC2	greyish green	85-		
	LG6	dark green			
	LG4	pearl white			
	LG5	champagne			
	KZ6	can-can-red			
	PY9	ocean blue	85-		
	PZ1	wild buffalo	85-		
(37)	928 555 021 57	side trim panel with loudspeaker opening leather F 92GS8 40111>> F 92GS8 49563>>	/L	1	 (J)
	KZ2	black			
	LG7	burgundy			
	QC2	greyish green			
	KZ3	blue			
	4RB	brown			
	KZ4	grey-beige			
	LG6	dark green			
	LG4	pearl white			
	LG5	champagne			
	KZ6	can-can-red			
	PY9	ocean blue			
	PZ1	wild buffalo			
37	928 555 022 57	side trim panel with loudspeaker opening leather F 92GS8 40111>> F 92GS8 49563>>	/R	1	 (J)
	KZ2	black			
	LG7	burgundy			
	QC2	greyish green			
	KZ3	blue			
	4RB	brown			
	KZ4	grey-beige			
	LG6	dark green			
	LG4	pearl white			
	LG5	champagne			
	KZ6	can-can-red			
	PY9	ocean blue			
	PZ1	wild buffalo			

Pos	Part Number	Name	Remarks	Qty	Model
(37)	928 555 921 01	side trim panel with loudspeaker opening leather F 92GS8 40111>> F 92GS8 49563>>	/L	1	M 490 (J)
	KZ2	black			
	LG7	burgundy			
	QC2	greyish green			
	KZ3	blue			
	4RB	brown			
	KZ4	grey-beige			
	LG6	dark green			
	LG4	pearl white			
	LG5	champagne			
	KZ6	can-can-red			
	PY9	ocean blue			
	PZ1	wild buffalo			
(37)	928 555 922 01	side trim panel with loudspeaker opening leather F 92GS8 40111>> F 92GS8 49563>>	/R	1	M 490 (J)
	KZ2	black			
	LG7	burgundy			
	QC2	greyish green			
	KZ3	blue			
	4RB	brown			
	KZ4	grey-beige			
	LG6	dark green			
	LG4	pearl white			
	LG5	champagne			
	KZ6	can-can-red			
	PY9	ocean blue			
	PZ1	wild buffalo			
38	928 555 275 04	rose seat belt	/L 86	1	
	70B	black			
(38)	928 555 276 04	rose seat belt	/R 86	1	
	70B	black			
39	900 143 007 02	tapping screw B 4,2 X 13		4	
40	-	see group 8/09/15 POS.9			
41	-	see group 8/09/15 POS.10			
42	928 555 469 03	knob coat hook		2	
43	900 145 091 07	tapping screw B 4,8 X 32		2	
44	999 591 102 07	protection washer		5	
45	900 145 062 07	tapping screw B 3,5 X 25		5	
46	A 928 551 911 01	floor mat with logo	/LL/L	1	
	40A	brown			
	70A	black			
(46)	A 928 551 912 01	floor mat with logo	/LL/R	1	
	40A	brown			
	70A	black			
46	000 043 087 00	floor mat 1 set	/LL	1	

Pos	Part Number	Name	Remarks	Qty	Model
	70E	black			
	3KF	blue			
	5MF	brown			
	80E	burgundy			
	60A	grey			
47	823 867 299	clip		6	
-	E 928 555 631 02	luggage net		1	
		- -- E N D -- -			

Pos	Part Number	Name	Remarks	Qty	Model

Model	Year	MG	SG	Illustration	Restrictions	Update				
928	86	8	07	807-10		179	14:53	01.09.2004	PORSCHE	PET	PORSCHE

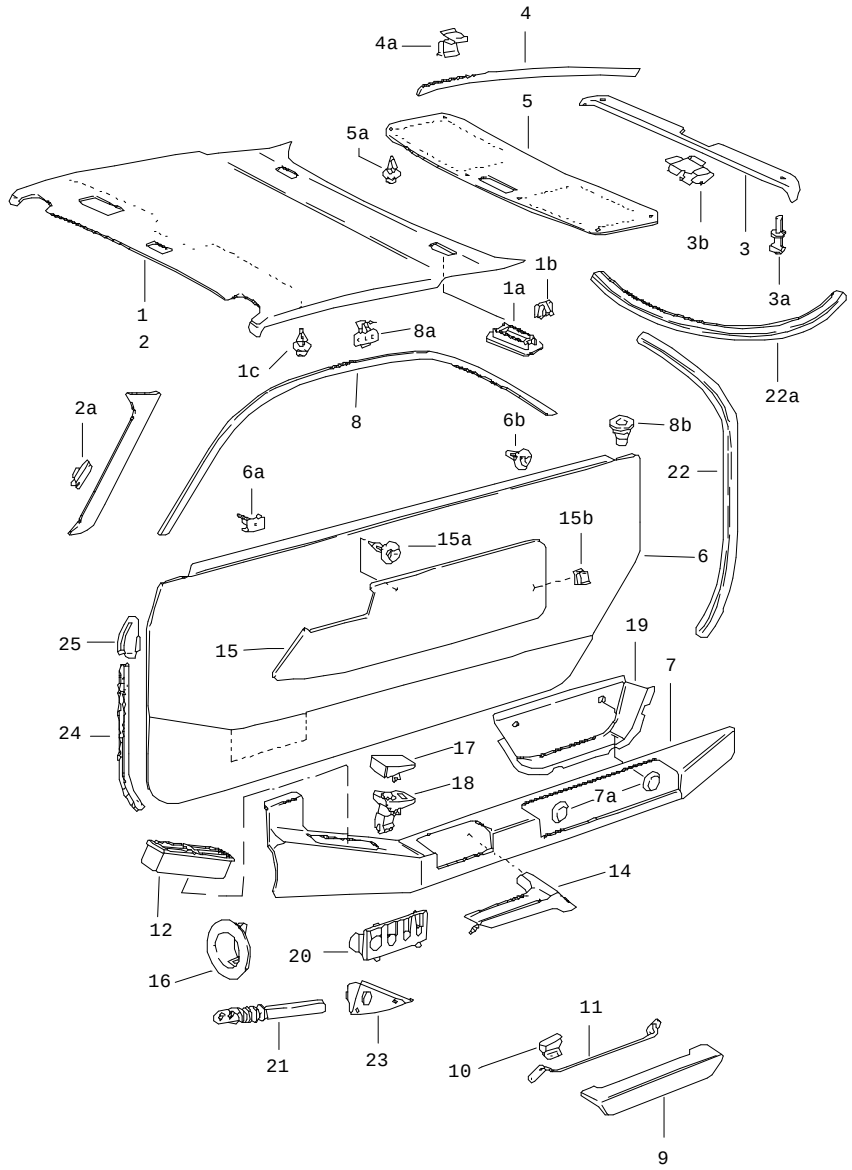

Pos	Part Number	Name	Remarks	Qty	Model
		door trim panel rooflining			
1	928 555 071 02	rooflining leatherette	/LL -83	1	
	4RB	brown			
	70A	black			
	1HH	blue			
	3MX	burgundy			
(1)	927 555 071 02	rooflining leatherette	/RL -83	1	
	4RB	brown			
	70A	black			
	1HH	blue			
	3MX	burgundy			
(1)	928 555 071 07	rooflining leatherette	84-	1	
	70A	black			
	4RB	brown			
	1HH	blue			
	3MX	burgundy			
	2KA	greyish green	85-		
(1)	928 555 071 50	rooflining leather	/LL -83	1	
	KZ2	black			
	KZ3	blue			
	4RB	brown			
	LG7	burgundy			
	LG6	dark green			
(1)	927 555 071 50	rooflining leather	/RL -83	1	

Pos	Part Number	Name	Remarks	Qty	Model
	KZ2	black			
	KZ3	blue			
	4RB	brown			
	LG7	burgundy			
	LG6	dark green			
(1)	928 555 071 53	rooflining leather	84-	1	
	KZ2	black			
	4RB	brown			
	KZ3	blue			
	LG7	burgundy			
	LG6	dark green			
	QC2	greyish green	85-		
	PY9	ocean blue	85-		
	PZ1	wild buffalo	85-		
1A	928 555 355 02	cap		2	
1B	928 555 365 03	spring clamp		4	
1C	823 867 299	clip		15	
(2)	928 555 073 02	lining windscreen frame leatherette	/L	1	
	70A	black			
	30B	blue			
	4RB	brown			
	3MX	burgundy			
	4JX	greyish green	85-		
2	928 555 074 02	lining windscreen frame leatherette	/R	1	
	70A	black			
	30B	blue			
	4RB	brown			
	3MX	burgundy			
	4JX	greyish green	85-		
2	928 555 251 50	lining windscreen frame leather	/L	1	
	KZ2	black			
	KZ3	blue			
	4RB	brown			
	LG7	burgundy			
	LG6	dark green			
	QC2	greyish green	85-		
	PY9	ocean blue	85-		
	PZ1	wild buffalo	85-		
2	928 555 252 50	lining windscreen frame leather	/R	1	
	KZ2	black			
	KZ3	blue			
	4RB	brown			
	LG7	burgundy			
	LG6	dark green			
	QC2	greyish green	85-		
	PY9	ocean blue	85-		
	PZ1	wild buffalo	85-		
2A	999 591 749 02	clamp		6	
(2A)	999 591 749 02	clamp		4	

Pos	Part Number	Name	Remarks	Qty	Model
3	928 555 047 05	lining cover lower leatherette	/H	1	
	05T	black	-84		
	1HH	blue	-84		
	4RB	brown	-84		
	3MX	burgundy	-84		
	5CT	black	85-		
	8HT	blue	85-		
	6RT	brown	85-		
	1MA	burgundy	85-		
	1JL	greyish green	85-		
3	928 555 047 53	lining cover lower leather	/H	1	
	KZ2	black			
	KZ3	blue			
	4RB	brown			
	LG7	burgundy			
	LG6	dark green			
	QC2	greyish green	85-		
	PY9	ocean blue	85-		
	PZ1	wild buffalo	85-		
3A	999 591 564 40	expansion rivet black		8	
3B	928 555 438 02	clamp		5	
4	928 555 037 02	lining cover leatherette	/L	1	
	05T	black	-84		
	1HH	blue	-84		
	4RB	brown	-84		
	3MX	burgundy	-84		
	5CT	black	85-		
	8HT	blue	85-		
	6RT	brown	85-		
	1MA	burgundy	85-		
	1JL	greyish green	85-		
(4)	928 555 038 02	lining cover leatherette	/R	1	
	05T	black	-84		
	1HH	blue	-84		
	4RB	brown	-84		
	3MX	burgundy	-84		
	5CT	black	85-		
	8HT	blue	85-		
	6RT	brown	85-		
	1MA	burgundy	85-		
	1JL	greyish green	85-		
(4)	928 555 037 50	lining cover leather	/L	1	
	KZ2	black			
	KZ3	blue			
	4RB	brown			
	LG7	burgundy			
	LG6	dark green			
	QC2	greyish green	85-		

Pos	Part Number	Name	Remarks	Qty	Model
	PY9	ocean blue	85-		
	PZ1	wild buffalo	85-		
4	928 555 038 50	lining cover leather	/R	1	
	KZ2	black			
	KZ3	blue			
	4RB	brown			
	LG7	burgundy			
	LG6	dark green			
	QC2	greyish green	85-		
	PY9	ocean blue	85-		
	PZ1	wild buffalo	85-		
4A	928 555 437 02	clamp		12	
5	928 555 527 02	lining cover upper leatherette	/H	1	
	70A	black	-84		
	1HH	blue	-84		
	4RB	brown	-84		
	3MX	burgundy	-84		
	5CT	black	85-		
	8HT	blue	85-		
	6RT	brown	85-		
	1MA	burgundy	85-		
	1JL	greyish green	85-		
(5)	928 555 527 50	lining cover upper leather	/H	1	
	KZ2	black			
	KZ3	blue			
	4RB	brown			
	LG7	burgundy			
	LG6	dark green			
	QC2	greyish green	85-		
	PY9	ocean blue	85-		
	PZ1	wild buffalo	85-		
5A	999 591 559 40	clip		8	
(6)	928 555 015 03	door trim panel leatherette/carpet	/L	1	
	BB2	black/black			
	LB3	blue/blue			
	LA9	brown/brown			
	JP8	burgundy/burgundy			
	JN9	grey-beige/grey-beige	-84,86		
	JM6	black/ grey			
	QC6	greyish green/grey-green	85-		
6	928 555 016 03	door trim panel leatherette/carpet	/R	1	
	BB2	black/black			
	LB3	blue/blue			
	LA9	brown/brown			
	JP8	burgundy/burgundy			
	JN9	grey-beige/grey-beige	-84,86		
	JM6	black/ grey			
	QC6	greyish green/grey-green	85-		

Pos	Part Number	Name	Remarks	Qty	Model
(6)	928 555 015 08	door trim panel leatherette/carpet	/L	1	M 490
	BB2	black/black			
	LB3	blue/blue			
	LA9	brown/brown			
	JP8	burgundy/burgundy			
	JN9	grey-beige/grey-beige	-84,86		
	JM6	black/ grey			
	QC6	greyish green/grey-green	85-		
(6)	928 555 016 08	door trim panel leatherette/carpet	/R	1	M 490
	BB2	black/black			
	LB3	blue/blue			
	LA9	brown/brown			
	JP8	burgundy/burgundy			
	JN9	grey-beige/grey-beige	-84,86		
	JM6	black/ grey			
	QC6	greyish green/grey-green	85-		
(6)	928 555 015 54	door trim panel leather/carpet	/L	1	
	LA2	black/black			
	LA6	blue/blue			
	LA4	brown/brown			
	LL1	burgundy/burgundy			
	LL2	grey-beige/grey-beige	-84,86		
	LG6	dark green/dark green	-84		
	LK9	black/ grey			
	QD1	dark green/dark green	85-		
	QC7	greyish green/grey-green	85-		
	QC9	can-can-red/can-can-red			
	LG8	can-can-red/ black			
	QB9	pearl white/white	85-		
	LJ7	pearl white/black			
	LL7	pearl white/ blue			
	LL8	pearl white/burgundy			
	QC3	pearl white/ greyish green	85-		
	QC8	champagne/champagne			
	LL9	champagne/black			
	LM1	champagne/brown			
	LM2	champagner/ blue			
	QC4	ocean blue/ blue	85-		
	QC5	wild buffalo/brown			
(6)	928 555 016 54	door trim panel leather/carpet	/R	1	
	LA2	black/black			
	LA6	blue/blue			
	LA4	brown/brown			
	LL1	burgundy/burgundy			
	LL2	grey-beige/grey-beige	-84,86		
	LG6	dark green/dark green	-84		
	LK9	black/ grey			
	QD1	dark green/dark green	85-		

Pos	Part Number	Name	Remarks	Qty	Model
	QC7	greyish green/grey-green	85-		
	QC9	can-can-red/can-can-red			
	LG8	can-can-red/ black			
	QB9	pearl white/white	85-		
	LJ7	pearl white/black			
	LL7	pearl white/ blue			
	LL8	pearl white/burgundy			
	QC3	pearl white/ greyish green	85-		
	QC8	champagne/champagne			
	LL9	champagne/black			
	LM1	champagne/brown			
	LM2	champagner/ blue			
	QC4	ocean blue/ blue	85-		
	QC5	wild buffalo/brown			
(6)	928 555 015 56	door trim panel leather/carpet	/L	1	M 490
	LA2	black/black			
	LA6	blue/blue			
	LA4	brown/brown			
	LL1	burgundy/burgundy			
	LL2	grey-beige/grey-beige	-84,86		
	LG6	dark green/dark green	-84		
	LK9	black/ grey			
	QD1	dark green/dark green	85-		
	QC7	greyish green/grey-green	85-		
	QC9	can-can-red/can-can-red			
	LG8	can-can-red/ black			
	QB9	pearl white/white	85-		
	LJ7	pearl white/black			
	LL7	pearl white/ blue			
	LL8	pearl white/burgundy			
	QC3	pearl white/ greyish green	85-		
	QC8	champagne/champagne			
	LL9	champagne/black			
	LM1	champagne/brown			
	LM2	champagner/ blue			
	QC4	ocean blue/ blue			
	QC5	wild buffalo/brown			
(6)	928 555 016 56	door trim panel leather/carpet	/R	1	M 490
	LA2	black/black			
	LA6	blue/blue			
	LA4	brown/brown			
	LL1	burgundy/burgundy			
	LL2	grey-beige/grey-beige	-84,86		
	LG6	dark green/dark green	-84		
	LK9	black/ grey			
	QD1	dark green/dark green	85-		
	QC7	greyish green/grey-green	85-		
	QC9	can-can-red/can-can-red			

Pos	Part Number	Name	Remarks	Qty	Model
	LG8	can-can-red/ black			
	QB9	pearl white/white	85-		
	LJ7	pearl white/black			
	LL7	pearl white/ blue			
	LL8	pearl white/burgundy			
	QC3	pearl white/ greyish green	85-		
	QC8	champagne/champagne			
	LL9	champagne/black			
	LM1	champagne/brown			
	LM2	champagner/ blue			
	QC4	ocean blue/ blue			
	QC5	wild buffalo/brown			
6A	999 591 461 01	clamp loudspeaker		8	
6B	823 867 299	clip		4	
(6B)	433 867 299 A	clip		22	
(7)	928 555 901 02	armrest leatherette	/L	1	
	05T	black			
	30B	blue			
	4RB	brown			
	3MX	burgundy			
	4JX	greyish green	85-		
7	928 555 902 02	armrest leatherette	/R	1	
	05T	black			
	30B	blue			
	4RB	brown			
	3MX	burgundy			
	4JX	greyish green	85-		
(7)	928 555 901 50	armrest leather	/L	1	
	KZ2	black			
	KZ3	blue			
	4RB	brown			
	7LD	burgundy			
	LG6	dark green			
	QC2	greyish green	85-		
	PY9	ocean blue	85-		
	PZ1	wild buffalo	85-		
7	928 555 902 50	armrest leather	/R	1	
	KZ2	black			
	KZ3	blue			
	4RB	brown			
	7LD	burgundy			
	LG6	dark green			
	QC2	greyish green	85-		
	PY9	ocean blue	85-		
	PZ1	wild buffalo	85-		
7A	928 555 383 02	cap		4	
(8)	928 555 025 02	lining door frame leatherette	/L	1	
	70A	black			

Pos	Part Number	Name	Remarks	Qty	Model
	1HH	blue			
	4RB	brown			
	3MX	burgundy			
	5FX	grey-beige	-84,86		
	2KA	greyish green	85-		
8	928 555 026 02	lining door frame leatherette	/R	1	
	70A	black			
	1HH	blue			
	4RB	brown			
	3MX	burgundy			
	5FX	grey-beige	-84,86		
	2KA	greyish green	85-		
(8)	928 555 025 50	lining door frame leather	/L	1	
	KZ2	black			
	KZ3	blue			
	KZ5	brown			
	LG6	dark green			
	KZ4	grey-beige	-84,86		
	LG7	burgundy			
	QC2	greyish green	85-		
	KZ6	can-can-red	85-		
	LG4	pearl white	85-		
	LG5	champagne	85-		
	PY9	ocean blue	85-		
	PZ1	wild buffalo	85-		

Pos	Part Number	Name	Remarks	Qty	Model
(8)	928 555 026 50	lining door frame leather	/R	1	
	KZ2	black			
	KZ3	blue			
	KZ5	brown			
	LG6	dark green			
	KZ4	grey-beige	-84,86		
	LG7	burgundy			
	QC2	greyish green	85-		
	KZ6	can-can-red	85-		
	LG4	pearl white	85-		
	LG5	champagne	85-		
	PY9	ocean blue	85-		
	PZ1	wild buffalo	85-		
8A E	928 555 493 02	clamp	-85	14	
(8A)	999 591 760 02	clamp	86	14	
8B	928 555 569 02	guide bush		2	
9	928 555 043 03	cover armrest leatherette		2	
	05T	black			
	30B	blue			
	4RB	brown			
	3MX	burgundy			
	4JX	greyish green	85-		
9	928 555 233 50	cover armrest leather		2	
	KZ2	black			

Pos	Part Number	Name	Remarks	Qty	Model
	KZ3	blue			
	4RB	brown			
	LL1	burgundy			
	6JD	dark green			
	QC2	greyish green	85-		
	PY9	ocean blue	85-		
	PZ1	wild buffalo	85-		
10	928 555 607 02	adjusting lever		2	
(11)	928 555 553 02	steering linkage	/L	1	
11	928 555 554 02	steering linkage	/R	1	
(12)	928 574 087 02	side vent	/L	1	
12	928 574 088 02	side vent	/R	1	
(14)	928 555 053 04	handle leatherette	/L	1	
	05T	black			
	30B	blue			
	4RB	brown			
	3MX	burgundy			
	4JX	greyish green	85-		
14	928 555 054 04	handle leatherette	/R	1	
	05T	black			
	30B	blue			
	4RB	brown			
	3MX	burgundy			
	4JX	greyish green	85-		
(14)	928 555 267 52	handle leather	/L	1	
	KZ2	black			
	KZ3	blue			
	4RB	brown			
	LL1	burgundy			
	LG6	dark green			
	QC2	greyish green	85-		
	PY9	ocean blue	85-		
	PZ1	wild buffalo	85-		
14	928 555 268 52	handle leather	/R	1	
	KZ2	black			
	KZ3	blue			
	4RB	brown			
	LL1	burgundy			
	LG6	dark green			
	QC2	greyish green	85-		
	PY9	ocean blue	85-		
	PZ1	wild buffalo	85-		
(15)	928 555 051 02	cover checker board velour	/L	1	
	4FH	light grey/black	84-		
	5RH	brown-grey	-84		
	7GH	blue-grey	-84		
	9LH	burgundy-grey	-84		
15	928 555 052 02	cover checker board velour	/R	1	
	4FH	light grey/black	84-		
	5RH	brown-grey	-84		
	7GH	blue-grey	-84		
	9LH	burgundy-grey	-84		

Pos	Part Number	Name	Remarks	Qty	Model
(15)	928 555 051 02	cover uni-coloured cloth	/L -84	1	
	30C	blue	-84		
	7NU	brown	-84		
	8FU	grey-beige	-84		
	70F	black	-84		
	5MU	burgundy	-84		
15	928 555 052 02	cover uni-coloured cloth	/R -84	1	
	30C	blue	-84		
	7NU	brown	-84		
	8FU	grey-beige	-84		
	70F	black	-84		
	5MU	burgundy	-84		
(15)	928 555 051 02	cover berber cloth	/L	1	
	1GB	grey/black	83		
	37B	blue/black	83		
	8NB	beige/brown	83		
	6LB	burgundy-grey	83		
	1FB	grey-beige-grey	83		
15	928 555 052 02	cover berber cloth	/R	1	
	1GB	grey/black	83		
	37B	blue/black	83		
	8NB	beige/brown	83		
	6LB	burgundy-grey	83		
	1FB	grey-beige-grey	83		
(15)	928 555 051 02	cover pin stripe velour	/L	1	
	7BN	black-white	84-		
	3NN	brown-beige	84-		
	8GJ	blue-white	84-		
	1MJ	burgundy-white	84-		
	9FN	grey-beige-white	84,86		
	3JV	greyish green-white	85-		
15	928 555 052 02	cover pin stripe velour	/R	1	
	7BN	black-white	84-		
	3NN	brown-beige	84-		
	8GJ	blue-white	84-		
	1MJ	burgundy-white	84-		
	9FN	grey-beige-white	84,86		
	3JV	greyish green-white	85-		
(15)	928 555 051 02	cover porsche lettering cloth	/L	1	
	4CR	black	84		
	6TR	brown	84		
	5HR	blue	84		
	2LR	burgundy	84		
	8RR	grey-beige	84		
	2CZ	black	85-		
	7NZ	brown	85-		
	6HZ	blue	85-		
	5LZ	burgundy	85-		
	1JK	greyish green	85-		
	5UY	grey-beige	86		
15	928 555 052 02	cover porsche lettering cloth	/R	1	

Pos	Part Number	Name	Remarks	Qty	Model
	4CR	black	84		
	6TR	brown	84		
	5HR	blue	84		
	2LR	burgundy	84		
	8RR	grey-beige	84		
	2CZ	black	85-		
	7NZ	brown	85-		
	6HZ	blue	85-		
	5LZ	burgundy	85-		
	1JK	greyish green	85-		
	5UY	grey-beige	86		
(15)	928 555 051 02	cover pin stripe flannel	/L	1	
	8BF	anthracite	85-		
	2TF	brown	85-		
	6GF	blue	85-		
	1MF	burgundy	85-		
	9JF	greyish green	85-		
15	928 555 052 02	cover pin stripe flannel	/R	1	
	8BF	anthracite	85-		
	2TF	brown	85-		
	6GF	blue	85-		
	1MF	burgundy	85-		
	9JF	greyish green	85-		
15	928 555 051 03	cover leatherette	/L 85	1	
	70A	black			
	4RB	brown			
	1HH	blue			
	3MX	burgundy			
	2KA	greyish green			
15	928 555 052 03	cover leatherette	/R 85	1	
	70A	black			
	4RB	brown			
	1HH	blue			
	3MX	burgundy			
	2KA	greyish green			
(15)	928 555 051 50	cover leather	/L	1	
	KZ5	brown			
	KZ2	black			
	LG7	burgundy			
	KZ4	grey-beige	-84,86		
	KZ3	blue			
	KZ6	can-can-red			
	LG4	pearl white			
	LG5	champagne			
	LG6	dark green			
	QC2	greyish green	85-		
	PY9	ocean blue	85-		
	PZ1	wild buffalo	85-		
15	928 555 052 50	cover leather	/R	1	
	KZ5	brown			
	KZ2	black			
	LG7	burgundy			

Pos	Part Number	Name	Remarks	Qty	Model
	KZ4	grey-beige	-84,86		
	KZ3	blue			
	KZ6	can-can-red			
	LG4	pearl white			
	LG5	champagne			
	LG6	dark green			
	QC2	greyish green	85-		
	PY9	ocean blue	85-		
	PZ1	wild buffalo	85-		
15A	999 591 559 40	clip		6	
15B	928 555 327 02	clamp		8	
16	928 555 317 02	rose		2	
17	928 555 363 02	cover	/LL	1	
(17)	927 555 363 02	cover side vent	/RL	1	
18	928 555 461 02	mounting piece	/LL	1	
18	927 555 461 02	mounting piece door mirror switch	/RL	1	
19	A 928 555 087 02	package box	/L	1	
19	928 555 087 03	package box	/L	1	
	71B	black			
19	928 555 088 03	package box	/R	1	
	71B	black			
-	928 555 479 03	sealing film	/L	1	
-	928 555 480 03	sealing film door	/R	1	
21	928 555 551 02	cable guide		2	
(22)	928 555 579 02	protective edging	/L	1	
22	928 555 580 02	protective edging	/R	1	
(22A)	928 555 425 02	lining side window	/L	1	
	05T	black			
(22A)	928 555 426 02	lining side window	/R	1	
	05T	black			
23	928 555 263 02	cover cable guide	/L	1	
23	928 555 264 02	cover cable guide	/R	1	
24	928 551 315 03	piping		2	
25	928 551 433 02	cap	/L	1	
25	928 551 434 02	cap	/R	1	

- -- E N D -- -

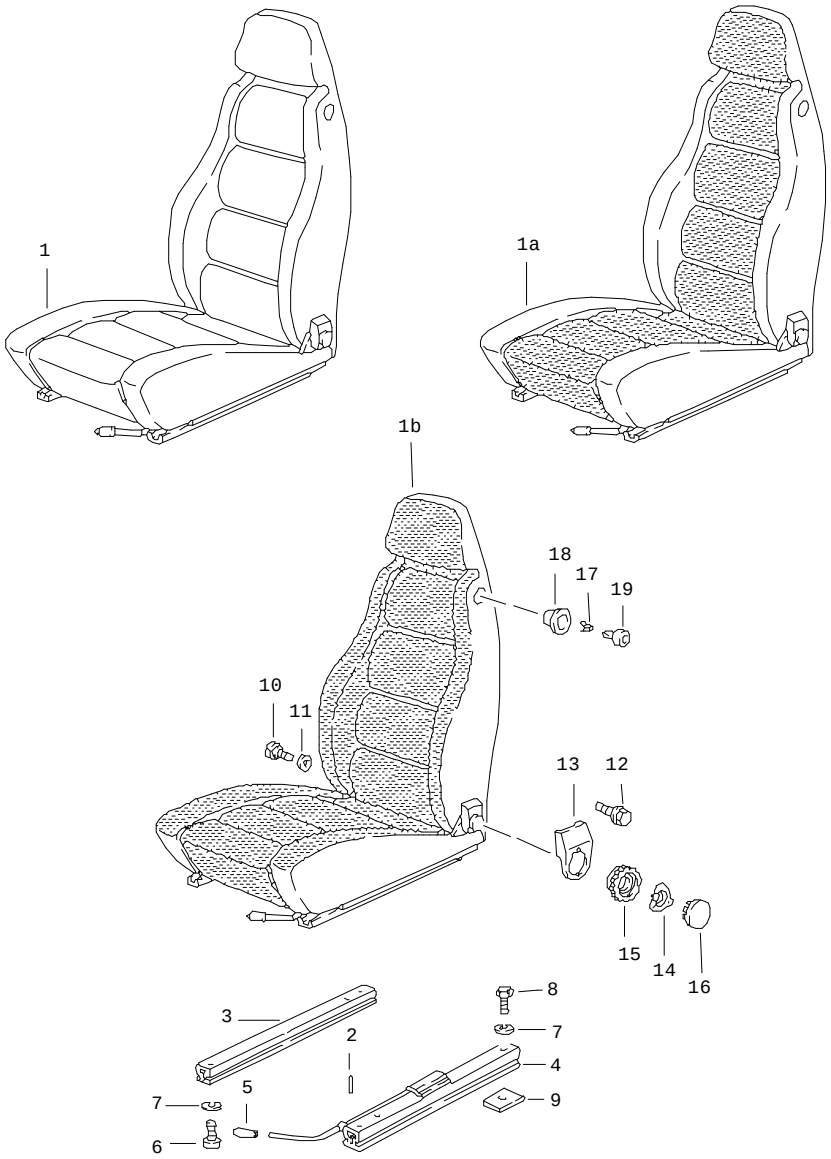

Pos	Part Number	Name	Remarks	Qty	Model
		front seat	-84		
1	A 928 521 001 56	front seat manually adjustable leather	/RL/L	1	
	KZ2	black			
	KZ3	blue			
	KZ5	brown			
	LG7	burgundy			
	KZ4	grey-beige			
	KZ6	can-can-red			
	LG4	pearl white			
	LG5	champagne			
	LG6	dark green			
(1)	A 928 521 002 56	front seat manually adjustable leather	/LL/R	1	
	KZ2	black			
	KZ3	blue			
	KZ5	brown			
	LG7	burgundy			
	KZ4	grey-beige			
	KZ6	can-can-red			
	LG4	pearl white			
	LG5	champagne			
	LG6	dark green			
(1)	A 928 521 001 53	front seat electrically adjustable leather	/L 83	1	M 437
	KZ2	black			
	KZ3	blue			

Pos	Part Number	Name	Remarks	Qty	Model
	KZ5	brown			
	LG7	burgundy			
	KZ4	grey-beige			
	KZ6	can-can-red			
	LG4	pearl white			
	LG5	champagne			
	LG6	dark green			
(1)	A 928 521 001 59	front seat electrically adjustable leather	/L 84	1	M 437
	KZ2	black			
	KZ3	blue			
	KZ5	brown			
	LG7	burgundy			
	KZ4	grey-beige			
	KZ6	can-can-red			
	LG4	pearl white			
	LG5	champagne			
	LG6	dark green			
(1)	A 928 521 002 53	front seat electrically adjustable leather	/R 83	1	M 438
	KZ2	black			
	KZ3	blue			
	KZ5	brown			
	LG7	burgundy			
	KZ4	grey-beige			
	KZ6	can-can-red			
	LG4	pearl white			
	LG5	champagne			
	LG6	dark green			
(1)	A 928 521 002 59	front seat electrically adjustable leather	/R 84	1	M 438
	KZ2	black			
	KZ3	blue			
	KZ5	brown			
	LG7	burgundy			
	KZ4	grey-beige			
	KZ6	can-can-red			
	LG4	pearl white			
	LG5	champagne			
	LG6	dark green			
1A	A 928 521 001 57	front seat manually adjustable leather/ centre part in cloth checker board velour	/RL/L	1	
	LH1	black/ light grey-black			
	LH2	brown/ brown-grey			
	LH3	blue/ blue-grey			
	LH4	burgundy/ burgundy-grey			
	LH5	grey-beige/ brown-grey			
(1A)	A 928 521 002 57	front seat manually adjustable leather/ centre part in cloth checker board velour	/LL/R	1	

Pos	Part Number	Name	Remarks	Qty	Model
	LH1	black/ light grey-black			
	LH2	brown/ brown-grey			
	LH3	blue/ blue-grey			
	LH4	burgundy/ burgundy-grey			
	LH5	grey-beige/ brown-grey			
(1A)	A 928 521 001 54	front seat electrically adjustable with seat adjuster leather/ centre part in cloth checker board velour	/L 83	1	M 437
	LH1	black/ light grey-black			
	LH2	brown/ brown-grey			
	LH3	blue/ blue-grey			
	LH4	burgundy/ burgundy-grey			
	LH5	grey-beige/ brown-grey			
(1A)	A 928 521 001 60	front seat electrically adjustable with seat adjuster leather/ centre part in cloth checker board velour	/L 84	1	M 437
	LH1	black/ light grey-black			
	LH2	brown/ brown-grey			
	LH3	blue/ blue-grey			
	LH4	burgundy/ burgundy-grey			
	LH5	grey-beige/ brown-grey			
(1A)	A 928 521 002 54	front seat electrically adjustable with seat adjuster leather/ centre part in cloth checker board velour	/R 83	1	M 438
	LH1	black/ light grey-black			
	LH2	brown/ brown-grey			
	LH3	blue/ blue-grey			
	LH4	burgundy/ burgundy-grey			
	LH5	grey-beige/ brown-grey			
(1A)	A 928 521 002 60	front seat electrically adjustable with seat adjuster leather/ centre part in cloth checker board velour	/R 84	1	M 438
	LH1	black/ light grey-black			
	LH2	brown/ brown-grey			
	LH3	blue/ blue-grey			
	LH4	burgundy/ burgundy-grey			
	LH5	grey-beige/ brown-grey			

Pos	Part Number	Name	Remarks	Qty	Model
1A	A 928 521 001 57	front seat manually adjustable leather/ centre part in cloth uni-coloured cloth	/RL/L	1	
	JT4	blue/blue			
	LJ1	brown/brown			
	LJ3	grey-beige/grey-beige			
	JN6	black/black			
	LJ2	burgundy/burgundy			
(1A)	A 928 521 002 57	front seat manually adjustable leather/ centre part in cloth uni-coloured cloth	/LL/R	1	
	JT4	blue/blue			
	LJ1	brown/brown			
	LJ3	grey-beige/grey-beige			
	JN6	black/black			
	LJ2	burgundy/burgundy			
(1A)	A 928 521 001 54	front seat electrically adjustable with seat adjuster leather/ centre part in cloth uni-coloured cloth	/L 83	1	M 437
	JT4	blue/blue			
	LJ1	brown/brown			
	LJ3	grey-beige/grey-beige			
	JN6	black/black			
	LJ2	burgundy/burgundy			
(1A)	A 928 521 001 60	front seat electrically adjustable with seat adjuster leather/ centre part in cloth uni-coloured cloth	/L 84	1	M 437
	JT4	blue/blue			
	LJ1	brown/brown			
	LJ3	grey-beige/grey-beige			
	JN6	black/black			
	LJ2	burgundy/burgundy			
(1A)	A 928 521 002 54	front seat electrically adjustable with seat adjuster leather/ centre part in cloth uni-coloured cloth	/R 83	1	M 438
	JT4	blue/blue			
	LJ1	brown/brown			
	LJ3	grey-beige/grey-beige			
	JN6	black/black			
	LJ2	burgundy/burgundy			
(1A)	A 928 521 002 60	front seat electrically adjustable with seat adjuster leather/ centre part in cloth uni-coloured cloth	/R 84	1	M 438
	JT4	blue/blue			
	LJ1	brown/brown			
	LJ3	grey-beige/grey-beige			
	JN6	black/black			
	LJ2	burgundy/burgundy			

Pos	Part Number	Name	Remarks	Qty	Model
1A	A 928 521 001 57	front seat manually adjustable leather/ centre part in cloth pin stripe velour	/RL/L	1	
	LS5	black/ black-white	84		
	LS6	brown/ brown-beige	84		
	LS8	blue/ blue-white	84		
	LS9	burgundy/ burgundy-white	84		
	LS7	grey-beige/ grey-beige-white	84		
(1A)	A 928 521 002 57	front seat manually adjustable leather/ centre part in cloth pin stripe velour	/LL/R	1	
	LS5	black/ black-white	84		
	LS6	brown/ brown-beige	84		
	LS8	blue/ blue-white	84		
	LS9	burgundy/ burgundy-white	84		
	LS7	grey-beige/ grey-beige-white	84		
(1A)	A 928 521 001 54	front seat electrically adjustable with seat adjuster leather/ centre part in cloth pin stripe velour	/L 83	1	M 437
(1A)	A 928 521 001 60	front seat electrically adjustable with seat adjuster leather/ centre part in cloth pin stripe velour	/L 84	1	M 437
	LS5	black/ black-white	84		
	LS6	brown/ brown-beige	84		
	LS8	blue/ blue-white	84		
	LS9	burgundy/ burgundy-white	84		
	LS7	grey-beige/ grey-beige-white	84		
(1A)	A 928 521 002 54	front seat electrically adjustable with seat adjuster leather/ centre part in cloth pin stripe velour	/R 83	1	M 438
(1A)	A 928 521 002 60	front seat electrically adjustable with seat adjuster leather/ centre part in cloth pin stripe velour	/R 84	1	M 438
	LS5	black/ black-white	84		
	LS6	brown/ brown-beige	84		
	LS8	blue/ blue-white	84		
	LS9	burgundy/ burgundy-white	84		
	LS7	grey-beige/ grey-beige-white	84		

Pos	Part Number	Name	Remarks	Qty	Model
1A	A 928 521 001 57	front seat manually adjustable leather/ centre part porsche lettering cloth	/RL/L	1	
	MN3	black/black	84		
	MN4	brown/brown	84		
	MN6	blue/blue	84		
	MN7	burgundy/burgundy	84		
	MN5	grey-beige/grey-beige	84		
(1A)	A 928 521 002 57	front seat manually adjustable leather/ centre part porsche lettering cloth	/LL/R	1	
	MN3	black/black	84		
	MN4	brown/brown	84		
	MN6	blue/blue	84		
	MN7	burgundy/burgundy	84		
	MN5	grey-beige/grey-beige	84		
(1A)	A 928 521 001 54	front seat electrically adjustable with seat adjuster leather/ centre part porsche lettering cloth	/L 83	1	M 437
(1A)	A 928 521 001 60	front seat electrically adjustable with seat adjuster leather/ centre part porsche lettering cloth	/L 84	1	M 437
	MN3	black/black	84		
	MN4	brown/brown	84		
	MN6	blue/blue	84		
	MN7	burgundy/burgundy	84		
	MN5	grey-beige/grey-beige	84		
(1A)	A 928 521 002 54	front seat electrically adjustable with seat adjuster leather/ centre part porsche lettering cloth	/R 83	1	M 438
(1A)	A 928 521 002 60	front seat electrically adjustable with seat adjuster leather/ centre part porsche lettering cloth	/R 84	1	M 438
	MN3	black/black	84		
	MN4	brown/brown	84		
	MN6	blue/blue	84		
	MN7	burgundy/burgundy	84		
	MN5	grey-beige/grey-beige	84		
1B	A 928 521 001 58	front seat manually adjustable leather/ seat and backrest surface berber cloth	/RL/L	1	
	JH1	black/ grey/black	83		
	JD4	blue/ blue/black	83		
	JH2	brown/ beige/brown	83		
	LH8	burgundy/ burgundy-grey	83		
	LH9	grey-beige/ grey-beige-grey	83		
(1B)	A 928 521 002 58	front seat manually adjustable leather/ seat and backrest surface berber cloth	/LL/R	1	

Pos	Part Number	Name	Remarks	Qty	Model
	JH1	black/ grey/black	83		
	JD4	blue/ blue/black	83		
	JH2	brown/ beige/brown	83		
	LH8	burgundy/ burgundy-grey	83		
	LH9	grey-beige/ grey-beige-grey	83		
(1B)	A 928 521 001 55	front seat electrically adjustable leather/ seat and backrest surface berber cloth	/L 83	1	M 437
	JH1	black/ grey/black	83		
	JD4	blue/ blue/black	83		
	JH2	brown/ beige/brown	83		
	LH8	burgundy/ burgundy-grey	83		
	LH9	grey-beige/ grey-beige-grey	83		
(1B)	A 928 521 001 61	front seat electrically adjustable leather/ seat and backrest surface berber cloth	/L 84	1	M 437
(1B)	A 928 521 002 55	front seat electrically adjustable leather/ seat and backrest surface berber cloth	/R 83	1	M 438
	JH1	black/ grey/black	83		
	JD4	blue/ blue/black	83		
	JH2	brown/ beige/brown	83		
	LH8	burgundy/ burgundy-grey	83		
	LH9	grey-beige/ grey-beige-grey	83		
(1B)	A 928 521 002 61	front seat electrically adjustable leather/ seat and backrest surface berber cloth	/R 84	1	M 438
1B	A 928 521 001 58	front seat manually adjustable leather/ seat and backrest surface porsche lettering cloth	/RL/L	1	
	LR9	black/black			
	LS1	brown/brown			
	LS3	blue/blue			
	LS4	burgundy/burgundy			
	LS2	grey-beige/grey-beige			
(1B)	A 928 521 002 58	front seat manually adjustable leather/ seat and backrest surface porsche lettering cloth	/LL/R	1	
	LR9	black/black			
	LS1	brown/brown			
	LS3	blue/blue			
	LS4	burgundy/burgundy			
	LS2	grey-beige/grey-beige			
(1B)	A 928 521 001 55	front seat electrically adjustable leather/ seat and backrest surface porsche lettering cloth	/L 83	1	M 437
	LR9	black/black			

Pos	Part Number	Name	Remarks	Qty	Model
	LS1	brown/brown			
	LS3	blue/blue			
	LS4	burgundy/burgundy			
	LS2	grey-beige/grey-beige			
(1B)	A 928 521 001 61	front seat electrically adjustable leather/ seat and backrest surface porsche lettering cloth	/L 84	1	M 437
	LR9	black/black			
	LS1	brown/brown			
	LS3	blue/blue			
	LS4	burgundy/burgundy			
	LS2	grey-beige/grey-beige			
(1B)	A 928 521 002 55	front seat electrically adjustable leather/ seat and backrest surface porsche lettering cloth	/R 83	1	M 438
	LR9	black/black			
	LS1	brown/brown			
	LS3	blue/blue			
	LS4	burgundy/burgundy			
	LS2	grey-beige/grey-beige			
(1B)	A 928 521 002 61	front seat electrically adjustable leather/ seat and backrest surface porsche lettering cloth	/R 84	1	M 438
	LR9	black/black			
	LS1	brown/brown			
	LS3	blue/blue			
	LS4	burgundy/burgundy			

Pos	Part Number	Name	Remarks	Qty	Model
	LS2	grey-beige/grey-beige			
2	900 012 123 00	pin A 2,5 X 12		2	
3	A 944 521 491 00	seat rail		2	
3	944 521 491 00	seat rail without locking device see tpi GR.8 NR.34		2	
4	A 928 521 489 02	seat rail with locking device	/L	1	
(4)	A 928 521 490 02	seat rail with locking device	/R	1	
(5)	911 521 533 01	handle f.longitudinal adjustment		2	
	01C	satin black			
6	N 014 761 2	pan-head screw M 6 X 12		8	
7	N 012 006 4	lock ring B 6		16	
8	900 075 057 02	hexagon-head bolt M 6 X 16		8	
9	928 521 101 04	threaded plate		8	
10	911 521 371 00	screw		2	
11	999 025 117 40	washer 12,5 X 32 X 1		X	
12	911 521 547 00	hexagon-head bolt M 10 X 20		8	
13	911 521 359 02	cover	/L	1	
(13)	911 521 360 02	cover	/R	1	
14	911 521 571 00	tensioning spring		2	
15	E 911 521 381 00	shifting wheel		2	
16	911 521 383 00	cover		2	
17	311 881 247	clamp		2	

Pos	Part Number	Name	Remarks	Qty	Model	Pos	Part Number	Name	Remarks	Qty	Model
18	928 521 815 02	rose		2							
19	928 521 817 02	push button		2							
		- -- E N D -- -									

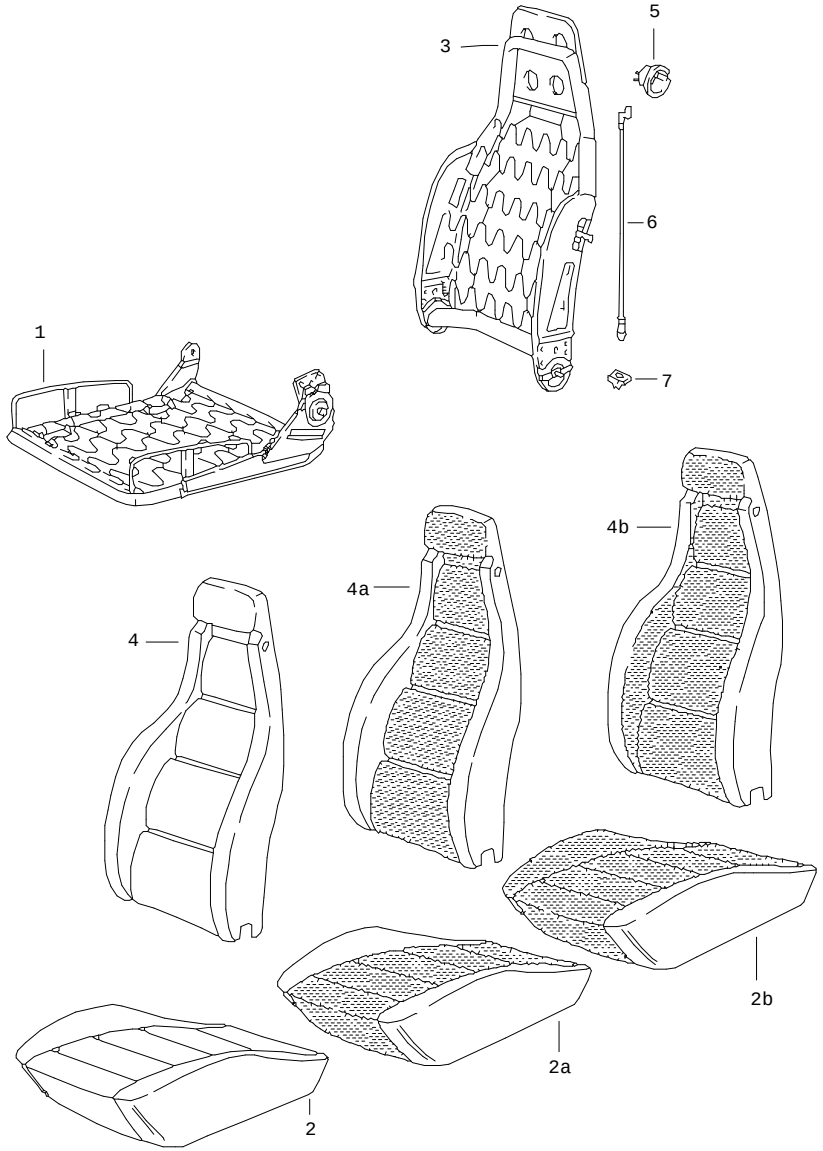

Pos	Part Number	Name	Remarks	Qty	Model
		front seat single parts	-84		
1	928 521 069 02	seat frame	/RL/L	1	
(1)	E 928 521 070 02	seat frame	/LL/R	1	
(1)	928 521 069 05	seat frame	/L 84	1	M 437
(1)	928 521 070 05	seat frame	/R 84	1	M 438
2	A 928 521 037 50	seat cover leather	/RL/L	1	
	KZ2	black			
	KZ3	blue			
	KZ5	brown			
	LG7	burgundy			
	KZ4	grey-beige			
	KZ6	can-can-red			
	LG4	pearl white			
	LG5	champagne			
	LG6	dark green			
(2)	A 928 521 038 50	seat cover leather	/LL/R	1	
	KZ2	black			
	KZ3	blue			
	KZ5	brown			
	LG7	burgundy			
	KZ4	grey-beige			
	KZ6	can-can-red			
	LG4	pearl white			
	LG5	champagne			
	LG6	dark green			

Pos	Part Number	Name	Remarks	Qty	Model
(2)	A 928 521 037 53	seat cover leather	/L 83	1	M 437
	KZ2	black			
	KZ3	blue			
	KZ5	brown			
	LG7	burgundy			
	KZ4	grey-beige			
	KZ6	can-can-red			
	LG4	pearl white			
	LG5	champagne			
	LG6	dark green			
(2)	A 928 521 037 56	seat cover leather	/L 84	1	M 437
	KZ2	black			
	KZ3	blue			
	KZ5	brown			
	LG7	burgundy			
	KZ4	grey-beige			
	KZ6	can-can-red			
	LG4	pearl white			
	LG5	champagne			
	LG6	dark green			
(2)	A 928 521 038 53	seat cover leather	/R 83	1	M 438
	KZ2	black			
	KZ3	blue			
	KZ5	brown			
	LG7	burgundy			
	KZ4	grey-beige			
	KZ6	can-can-red			
	LG4	pearl white			
	LG5	champagne			
	LG6	dark green			
(2)	A 928 521 038 56	seat cover leather	/R 84	1	M 438
	KZ2	black			
	KZ3	blue			
	KZ5	brown			
	LG7	burgundy			
	KZ4	grey-beige			
	KZ6	can-can-red			
	LG4	pearl white			
	LG5	champagne			
	LG6	dark green			
2A	A 928 521 037 51	seat cover leather/ centre part checker board velour	/RL/L	1	
	LH1	black/ light grey-black			
	LH2	brown/ brown-grey			
	LH3	blue/ blue-grey			
	LH4	burgundy/ burgundy-grey			
	LH5	grey-beige/ brown-grey			
(2A)	A 928 521 038 51	seat cover leather/ centre part checker board velour	/LL/R	1	

Pos	Part Number	Name	Remarks	Qty	Model
	LH1	black/ light grey-black			
	LH2	brown/ brown-grey			
	LH3	blue/ blue-grey			
	LH4	burgundy/ burgundy-grey			
	LH5	grey-beige/ brown-grey			
(2A)	A 928 521 037 54	seat cover leather/ centre part checker board velour	/L 83	1	M 437
	LH1	black/ light grey-black			
	LH2	brown/ brown-grey			
	LH3	blue/ blue-grey			
	LH4	burgundy/ burgundy-grey			
	LH5	grey-beige/ brown-grey			
(2A)	A 928 521 037 57	seat cover leather/ centre part checker board velour	/L 84	1	M 437
	LH1	black/ light grey-black			
	LH2	brown/ brown-grey			
	LH3	blue/ blue-grey			
	LH4	burgundy/ burgundy-grey			
	LH5	grey-beige/ brown-grey			
(2A)	A 928 521 038 54	seat cover leather/ centre part checker board velour	/R 83	1	M 438
	LH1	black/ light grey-black			
	LH2	brown/ brown-grey			
	LH3	blue/ blue-grey			
	LH4	burgundy/ burgundy-grey			
	LH5	grey-beige/ brown-grey			
(2A)	A 928 521 038 57	seat cover leather/ centre part checker board velour	/R 84	1	M 438
	LH1	black/ light grey-black			
	LH2	brown/ brown-grey			
	LH3	blue/ blue-grey			
	LH4	burgundy/ burgundy-grey			
	LH5	grey-beige/ brown-grey			
2A	A 928 521 037 51	seat cover leather/ centre part uni-coloured cloth	/RL/L	1	
	JT4	blue/blue			
	LJ1	brown/brown			
	LJ3	grey-beige/grey-beige			
	JN6	black/black			
	LJ2	burgundy/burgundy			

Pos	Part Number	Name	Remarks	Qty	Model
(2A)	A 928 521 038 51	seat cover leather/ centre part uni-coloured cloth	/LL/R	1	
	JT4	blue/blue			
	LJ1	brown/brown			
	LJ3	grey-beige/grey-beige			
	JN6	black/black			
	LJ2	burgundy/burgundy			
(2A)	A 928 521 037 54	seat cover leather/ centre part uni-coloured cloth	/L 83	1	M 437
	JT4	blue/blue			
	LJ1	brown/brown			
	LJ3	grey-beige/grey-beige			
	JN6	black/black			
	LJ2	burgundy/burgundy			
(2A)	A 928 521 037 57	seat cover leather/ centre part uni-coloured cloth	/L 84	1	M 437
	JT4	blue/blue			
	LJ1	brown/brown			
	LJ3	grey-beige/grey-beige			
	JN6	black/black			
	LJ2	burgundy/burgundy			
(2A)	A 928 521 038 54	seat cover leather/ centre part uni-coloured cloth	/R 83	1	M 438
	JT4	blue/blue			
	LJ1	brown/brown			
	LJ3	grey-beige/grey-beige			
	JN6	black/black			
	LJ2	burgundy/burgundy			
(2A)	A 928 521 038 57	seat cover leather/ centre part uni-coloured cloth	/R 84	1	M 438
	JT4	blue/blue			
	LJ1	brown/brown			
	LJ3	grey-beige/grey-beige			
	JN6	black/black			
	LJ2	burgundy/burgundy			
2A	A 928 521 037 51	seat cover leather/ centre part pin stripe velour	/RL/L	1	
	LS5	black/ black-white	84		
	LS6	brown/ brown-beige	84		
	LS8	blue/ blue-white	84		
	LS9	burgundy/ burgundy-white	84		
	LS7	grey-beige/ grey-beige-white	84		
(2A)	A 928 521 038 51	seat cover leather/ centre part pin stripe velour	/LL/R	1	
	LS5	black/ black-white	84		
	LS6	brown/ brown-beige	84		
	LS8	blue/ blue-white	84		

Pos	Part Number	Name	Remarks	Qty	Model
	LS9	burgundy/ burgundy-white	84		
	LS7	grey-beige/ grey-beige-white	84		
(2A)	A 928 521 037 54	seat cover leather/ centre part pin stripe velour	/L 83	1	M 437
(2A)	A 928 521 037 57	seat cover leather/ centre part pin stripe velour	/L 84	1	M 437
	LS5	black/ black-white	84		
	LS6	brown/ brown-beige	84		
	LS8	blue/ blue-white	84		
	LS9	burgundy/ burgundy-white	84		
	LS7	grey-beige/ grey-beige-white	84		
(2A)	A 928 521 038 54	seat cover leather/ centre part pin stripe velour	/R 83	1	M 438
(2A)	A 928 521 038 57	seat cover leather/ centre part pin stripe velour	/R 84	1	M 438
	LS5	black/ black-white	84		
	LS6	brown/ brown-beige	84		
	LS8	blue/ blue-white	84		
	LS9	burgundy/ burgundy-white	84		

Pos	Part Number	Name	Remarks	Qty	Model
	LS7	grey-beige/ grey-beige-white	84		
2A	A 928 521 037 51	seat cover leather/ centre part porsche lettering cloth	/RL/L	1	
	MN3	black/black	84		
	MN4	brown/brown	84		
	MN6	blue/blue	84		
	MN7	burgundy/burgundy	84		
	MN5	grey-beige/grey-beige	84		
(2A)	A 928 521 038 51	seat cover leather/ centre part porsche lettering cloth	/LL/R	1	
	MN3	black/black	84		
	MN4	brown/brown	84		
	MN6	blue/blue	84		
	MN7	burgundy/burgundy	84		
	MN5	grey-beige/grey-beige	84		
(2A)	A 928 521 037 54	seat cover leather/ centre part porsche lettering cloth	/L 83	1	M 437
(2A)	A 928 521 037 57	seat cover leather/ centre part porsche lettering cloth	/L 84	1	M 437
	MN3	black/black	84		
	MN4	brown/brown	84		
	MN6	blue/blue	84		
	MN7	burgundy/burgundy	84		
	MN5	grey-beige/grey-beige	84		

Pos	Part Number	Name	Remarks	Qty	Model
(2A)	A 928 521 038 54	seat cover leather/ centre part porsche lettering cloth	/R 83	1	M 438
(2A)	A 928 521 038 57	seat cover leather/ centre part porsche lettering cloth	/R 84	1	M 438
	MN3	black/black	84		
	MN4	brown/brown	84		
	MN6	blue/blue	84		
	MN7	burgundy/burgundy	84		
	MN5	grey-beige/grey-beige	84		
2B	A 928 521 037 52	seat cover leather/ seat surface berber cloth	/RL/L	1	
	JH1	black/ grey/black	83		
	JD4	blue/ blue/black	83		
	JH2	brown/ beige/brown	83		
	LH8	burgundy/ burgundy-grey	83		
	LH9	grey-beige/ grey-beige-grey	83		
(2B)	A 928 521 038 52	seat cover leather/ seat surface berber cloth	/LL/R	1	
	JH1	black/ grey/black	83		
	JD4	blue/ blue/black	83		
	JH2	brown/ beige/brown	83		
	LH8	burgundy/ burgundy-grey	83		
	LH9	grey-beige/ grey-beige-grey	83		
(2B)	A 928 521 037 55	seat cover leather/ seat surface berber cloth	/L 83	1	M 437
	JH1	black/ grey/black	83		
	JD4	blue/ blue/black	83		
	JH2	brown/ beige/brown	83		
	LH8	burgundy/ burgundy-grey	83		
	LH9	grey-beige/ grey-beige-grey	83		
(2B)	A 928 521 037 58	seat cover leather/ seat surface berber cloth	/L 84	1	M 437
(2B)	A 928 521 038 55	seat cover leather/ seat surface berber cloth	/R 83	1	M 438
	JH1	black/ grey/black	83		
	JD4	blue/ blue/black	83		
	JH2	brown/ beige/brown	83		
	LH8	burgundy/ burgundy-grey	83		
	LH9	grey-beige/ grey-beige-grey	83		

Pos	Part Number	Name	Remarks	Qty	Model
(2B)	A 928 521 038 58	seat cover leather/ seat surface berber cloth	/R 84	1	M 438
2B	A 928 521 037 52	seat cover leather/ seat surface porsche lettering cloth	/RL/L	1	
	LR9	black/black	84		
	LS1	brown/brown	84		
	LS3	blue/blue	84		
	LS4	burgundy/burgundy	84		
	LS2	grey-beige/grey-beige	84		
(2B)	A 928 521 038 52	seat cover leather/ seat surface porsche lettering cloth	/LL/R	1	
	LR9	black/black	84		
	LS1	brown/brown	84		
	LS3	blue/blue	84		
	LS4	burgundy/burgundy	84		
	LS2	grey-beige/grey-beige	84		
(2B)	A 928 521 037 55	seat cover leather/ seat surface porsche lettering cloth	/L 83	1	M 437
(2B)	A 928 521 037 58	seat cover leather/ seat surface porsche lettering cloth	/L 84	1	M 437
	LR9	black/black	84		
	LS1	brown/brown	84		
	LS3	blue/blue	84		
	LS4	burgundy/burgundy	84		
	LS2	grey-beige/grey-beige	84		
(2B)	A 928 521 038 55	seat cover leather/ seat surface porsche lettering cloth	/R 83	1	M 438
(2B)	A 928 521 038 58	seat cover leather/ seat surface porsche lettering cloth	/R 84	1	M 438
	LR9	black/black	84		
	LS1	brown/brown	84		
	LS3	blue/blue	84		
	LS4	burgundy/burgundy	84		
	LS2	grey-beige/grey-beige	84		
3	928 521 027 02	backrest frame	/RL/L	1	
(3)	928 521 028 02	backrest frame	/LL/R	1	
(3)	928 521 027 03	backrest frame	/L	1	M 437
(3)	928 521 028 03	backrest frame	/R	1	M 438
4	A 928 521 072 50	backrest cover leather		2	
	KZ2	black			
	KZ3	blue			
	KZ5	brown			
	LG7	burgundy			
	KZ4	grey-beige			
	KZ6	can-can-red			
	LG4	pearl white			
	LG5	champagne			
	LG6	dark green			
(4)	A 928 521 071 53	backrest cover leather	/L	1	M 437
	KZ2	black			

Pos	Part Number	Name	Remarks	Qty	Model
	KZ3	blue			
	KZ5	brown			
	LG7	burgundy			
	KZ4	grey-beige			
	KZ6	can-can-red			
	LG4	pearl white			
	LG5	champagne			
	LG6	dark green			
(4)	A 928 521 072 53	backrest cover leather	/R	1	M 438
	KZ2	black			
	KZ3	blue			
	KZ5	brown			
	LG7	burgundy			
	KZ4	grey-beige			
	KZ6	can-can-red			
	LG4	pearl white			
	LG5	champagne			
	LG6	dark green			
4A	A 928 521 072 51	backrest cover leather/ centre part checker board velour		2	
	LH1	black/ light grey-black			
	LH2	brown/ brown-grey			
	LH3	blue/ blue-grey			
	LH4	burgundy/ burgundy-grey			
	LH5	grey-beige/ brown-grey			
(4A)	A 928 521 071 54	backrest cover leather/ centre part checker board velour	/L	1	M 437
	LH1	black/ light grey-black			
	LH2	brown/ brown-grey			
	LH3	blue/ blue-grey			
	LH4	burgundy/ burgundy-grey			
	LH5	grey-beige/ brown-grey			
(4A)	A 928 521 072 54	backrest cover leather/ centre part checker board velour	/R	1	M 438
	LH1	black/ light grey-black			
	LH2	brown/ brown-grey			
	LH3	blue/ blue-grey			
	LH4	burgundy/ burgundy-grey			
	LH5	grey-beige/ brown-grey			
4A	A 928 521 072 51	backrest cover leather/ centre part uni-coloured cloth		2	
	JT4	blue/blue			
	LJ1	brown/brown			
	LJ3	grey-beige/grey-beige			

Pos	Part Number	Name	Remarks	Qty	Model
	JN6	black/black			
	LJ2	burgundy/burgundy			
(4A)	A 928 521 071 54	backrest cover leather/ centre part uni-coloured cloth	/L	1	M 437
	JT4	blue/blue			
	LJ1	brown/brown			
	LJ3	grey-beige/grey-beige			
	JN6	black/black			
	LJ2	burgundy/burgundy			
(4A)	A 928 521 072 54	backrest cover leather/ centre part uni-coloured cloth	/R	1	M 438
	JT4	blue/blue			
	LJ1	brown/brown			
	LJ3	grey-beige/grey-beige			
	JN6	black/black			
	LJ2	burgundy/burgundy			
4A	A 928 521 072 51	backrest cover leather/ centre part pin stripe velour		2	
	LS5	black/ black-white	84		
	LS6	brown/ brown-beige	84		
	LS8	blue/ blue-white	84		
	LS9	burgundy/ burgundy-white	84		
	LS7	grey-beige/ grey-beige-white	84		

Pos	Part Number	Name	Remarks	Qty	Model
(4A)	A 928 521 071 54	backrest cover leather/ centre part pin stripe velour	/L	1	M 437
	LS5	black/ black-white	84		
	LS6	brown/ brown-beige	84		
	LS8	blue/ blue-white	84		
	LS9	burgundy/ burgundy-white	84		
	LS7	grey-beige/ grey-beige-white	84		
(4A)	A 928 521 072 54	backrest cover leather/ centre part pin stripe velour	/R	1	M 438
	LS5	black/ black-white	84		
	LS6	brown/ brown-beige	84		
	LS8	blue/ blue-white	84		
	LS9	burgundy/ burgundy-white	84		
	LS7	grey-beige/ grey-beige-white	84		
4A	A 928 521 072 51	backrest cover leather/ centre part porsche lettering cloth		2	
	MN3	black/black	84		
	MN4	brown/brown	84		
	MN6	blue/blue	84		
	MN7	burgundy/burgundy	84		
	MN5	grey-beige/grey-beige	84		

Pos	Part Number	Name	Remarks	Qty	Model
(4A)	A 928 521 071 54	backrest cover leather/ centre part porsche lettering cloth	/L	1	M 437
	MN3	black/black	84		
	MN4	brown/brown	84		
	MN6	blue/blue	84		
	MN7	burgundy/burgundy	84		
	MN5	grey-beige/grey-beige	84		
(4A)	A 928 521 072 54	backrest cover leather/ centre part porsche lettering cloth	/R	1	M 438
	MN3	black/black	84		
	MN4	brown/brown	84		
	MN6	blue/blue	84		
	MN7	burgundy/burgundy	84		
	MN5	grey-beige/grey-beige	84		
4B	A 928 521 072 52	backrest cover leather/ backrest surface berber cloth		2	
	JH1	black/ grey/black	83		
	JD4	blue/ blue/black	83		
	JH2	brown/ beige/brown	83		
	LH8	burgundy/ burgundy-grey	83		
	LH9	grey-beige/ grey-beige-grey	83		
(4B)	A 928 521 071 55	backrest cover leather/ backrest surface berber cloth	/L	1	M 437
	JH1	black/ grey/black	83		
	JD4	blue/ blue/black	83		
	JH2	brown/ beige/brown	83		
	LH8	burgundy/ burgundy-grey	83		
	LH9	grey-beige/ grey-beige-grey	83		
(4B)	A 928 521 072 55	backrest cover leather/ backrest surface berber cloth	/R	1	M 438
	JH1	black/ grey/black	83		
	JD4	blue/ blue/black	83		
	JH2	brown/ beige/brown	83		
	LH8	burgundy/ burgundy-grey	83		
	LH9	grey-beige/ grey-beige-grey	83		
4B	A 928 521 072 52	backrest cover leather/ backrest surface porsche lettering cloth		2	
	LR9	black/black	84		
	LS1	brown/brown	84		
	LS3	blue/blue	84		
	LS4	burgundy/burgundy	84		
	LS2	grey-beige/grey-beige	84		
(4B)	A 928 521 071 55	backrest cover leather/ backrest surface porsche lettering cloth	/L	1	M 437

Pos	Part Number	Name	Remarks	Qty	Model
	LR9	black/black	84		
	LS1	brown/brown	84		
	LS3	blue/blue	84		
	LS4	burgundy/burgundy	84		
	LS2	grey-beige/grey-beige	84		
(4B)	A 928 521 072 55	backrest cover leather/ backrest surface porsche lettering cloth	/R	1	M 438
	LR9	black/black	84		
	LS1	brown/brown	84		
	LS3	blue/blue	84		
	LS4	burgundy/burgundy	84		
	LS2	grey-beige/grey-beige	84		
5	E 928 521 813 02	support ring		2	
6	911 521 361 01	wire pull		2	
7	911 521 369 00	terminal		2	
		- -- E N D -- -			

Pos	Part Number	Name	Remarks	Qty	Model

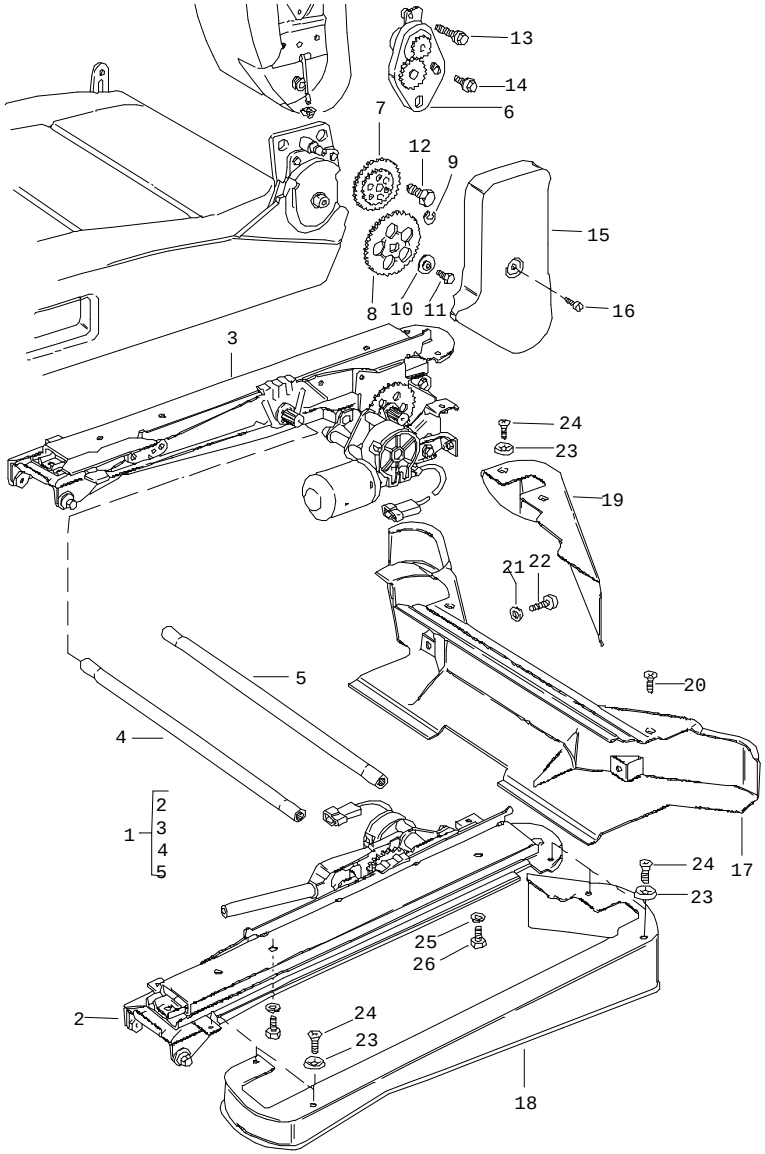

Pos	Part Number	Name	Remarks	Qty	Model
		front seat electrical equipment	-84		
1	928 521 059 02	seat adjuster	83	1	
(1)	928 521 059 03	seat adjuster	84	1	
2	928 521 061 02	driving mechanism	/L 83	1	
(2)	928 521 061 04	driving mechanism	/L 84	1	
3	928 521 062 02	driving mechanism	/R 83	1	
(3)	928 521 062 04	driving mechanism	/R 84	1	
4	928 521 795 02	transmission tube f.longitudinal adjustment		2	
5	928 521 797 02	transmission tube height adjustment		2	
6	928 521 055 02	plate	/L	1	
(6)	928 521 056 02	plate	/R	1	
7	928 521 653 02	gear wheel		1	
8	928 521 648 02	gear wheel		1	
9	900 116 005 02	lock washer 7		2	
10	E 928 521 705 02	dished washer		2	
11	N 010 208 5	hexagon-head bolt M 6 X 8		2	
12	911 521 547 00	hexagon-head bolt M 10 X 20		4	
13	E 999 217 005 02	screw M 6 X 20		2	
14	E 999 217 003 02	screw M 6 X 8		2	
15	928 521 785 02	cover	/L	1	
(15)	928 521 786 02	cover	/R	1	
16	N 014 122 8	oval-head screw M 4 X 8		2	
17	928 521 781 04	protection cap	/H	2	

Pos	Part Number	Name	Remarks	Qty	Model
18	E 928 521 761 04	cover left seat	/L	1	
(18)	928 521 764 04	cover right seat	/L	1	
(19)	928 521 762 04	cover right seat	/R	1	
19	928 521 763 04	cover left seat	/R	1	
20	900 269 015 07	countersunk-head screw M 5 X 10		2	
21	900 025 003 02	washer A 5,3		2	
22	900 146 037 07	oval-head screw M 5 X 16		2	
23	999 591 102 17	washer A 3,5		6	
24	900 145 071 07	tapping screw B 3,5 X 13		6	
25	N 012 006 4	lock ring B 6		4	
26	A N 014 761 2	pan-head screw M 6 X 12		4	
		- -- E N D -- -			

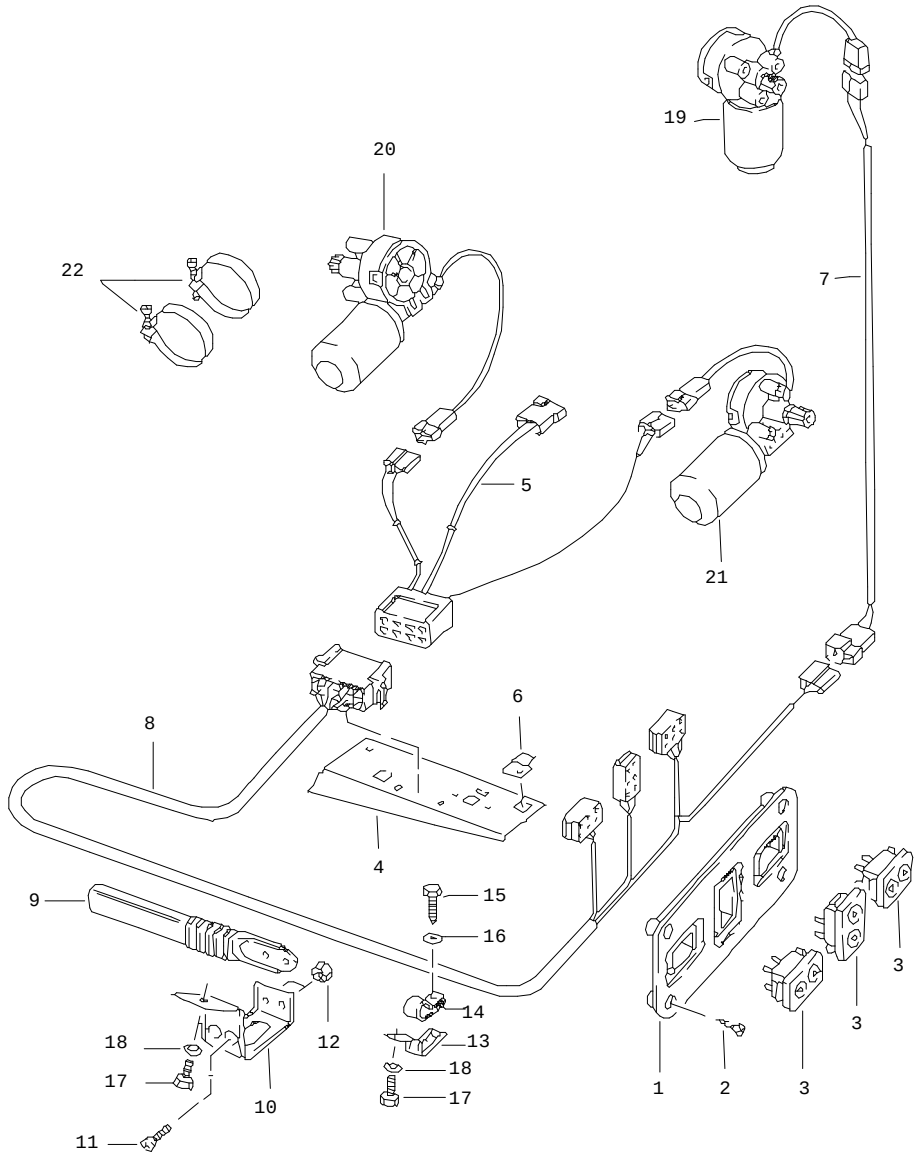

Pos	Part Number	Name	Remarks	Qty	Model
		front seat electrical equipment	-84		
1	A 928 521 351 03	rose	83	1	
(1)	E 928 521 351 04	rose	84	1	
2	900 143 049 07	tapping screw BZ 3,5 X 9,5		8	
3	928 613 144 00	tip switch		6	
4	928 615 129 01	relay holder		2	
5	928 612 174 03	wiring harness	/L	1	
(5)	928 612 174 04	wiring harness	/R	1	
6	E 999 651 146 02	cable clamp		6	
7	928 612 175 00	wiring harness		2	
8	928 612 173 02	wiring harness		2	
9	928 555 551 03	cable guide		2	
10	928 612 445 01	support		2	
11	N 014 139 11	oval-head screw M 6 X 12		4	
12	900 076 010 02	hexagon nut M 6		4	
13	928 612 446 01	support wiring harness		2	
14	999 511 081 02	clip		2	
15	900 187 013 02	tapping screw BZ 4,2 X 13		6	
16	900 151 028 02	washer 4,3		2	
17	N 010 208 5	hexagon-head bolt M 6 X 8		4	
18	N 012 226 5	spring washer B 6		4	
19	928 624 123 00	adjusting motor backrest	/L	1	

Pos	Part Number	Name	Remarks	Qty	Model
(19)	E 928 624 124 00	adjusting motor backrest	/R	1	
20	E 928 624 124 00	adjusting motor height adjustment		2	
21	928 624 125 00	adjusting motor f.longitudinal adjustment		2	
22	999 512 341 02	clip		4	
		- -- E N D -- -			

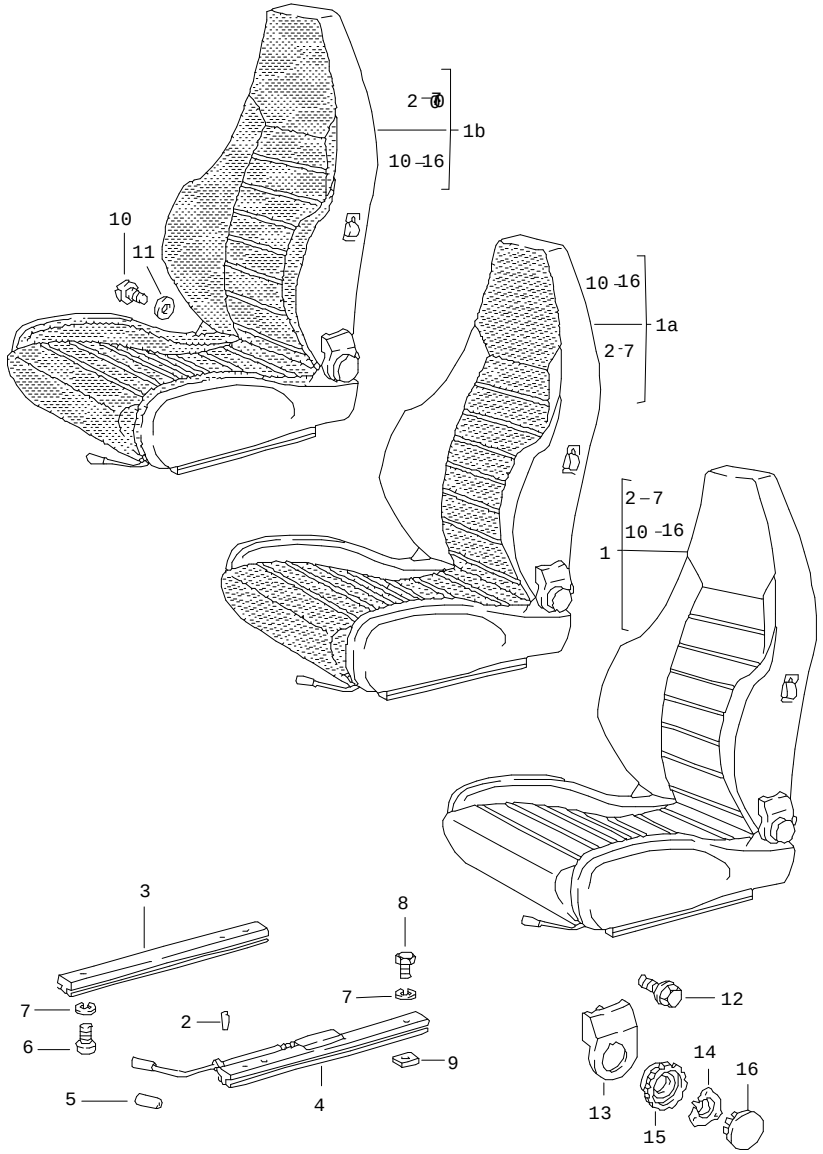

Pos	Part Number	Name	Remarks	Qty	Model
		sports seat manually adjustable complete	-84		
1	A 911 521 007 61	sports seat leather	/L	1	
	KZ2	black			
	KZ3	blue			
	KZ5	brown			
	LG7	burgundy			
	KZ4	grey-beige			
	KZ6	can-can-red			
	LG4	pearl white			
	LG5	champagne			
	LG6	dark green			
(1)	A 911 521 008 61	sports seat leather	/R	1	
	KZ2	black			
	KZ3	blue			
	KZ5	brown			
	LG7	burgundy			
	KZ4	grey-beige			
	KZ6	can-can-red			
	LG4	pearl white			
	LG5	champagne			
	LG6	dark green			
1A	A 911 521 007 62	sports seat leather/ centre part checker board velour	/L	1	
	LH1	black/ light grey-black			

Pos	Part Number	Name	Remarks	Qty	Model
	LH2	brown/ brown-grey			
	LH3	blue/ blue-grey			
	LH4	burgundy/ burgundy-grey			
	LH5	grey-beige/ brown-grey			
(1A)	A 911 521 008 62	sports seat leather/ centre part checker board velour	/R	1	
	LH1	black/ light grey-black			
	LH2	brown/ brown-grey			
	LH3	blue/ blue-grey			
	LH4	burgundy/ burgundy-grey			
	LH5	grey-beige/ brown-grey			
1A	A 911 521 007 62	sports seat leather/ centre part uni-coloured cloth	/L	1	
	JN6	black/black			
	LJ1	brown/brown			
	JT4	blue/blue			
	LJ2	burgundy/burgundy			
	LJ3	grey-beige/grey-beige			
(1A)	A 911 521 008 62	sports seat leather/ centre part uni-coloured cloth	/R	1	
	JN6	black/black			
	LJ1	brown/brown			
	JT4	blue/blue			
	LJ2	burgundy/burgundy			
	LJ3	grey-beige/grey-beige			
1A	A 911 521 007 62	sports seat leather/ centre part pin stripe velour	/L	1	
	LS5	black/ black-white	84		
	LS6	brown/ brown-beige	84		
	LS8	blue/ blue-white	84		
	LS9	burgundy/ burgundy-white	84		
	LS7	grey-beige/ grey-beige-white	84		
(1A)	A 911 521 008 62	sports seat leather/ centre part pin stripe velour	/R	1	
	LS5	black/ black-white	84		
	LS6	brown/ brown-beige	84		
	LS8	blue/ blue-white	84		
	LS9	burgundy/ burgundy-white	84		
	LS7	grey-beige/ grey-beige-white	84		
1A	A 911 521 007 62	sports seat leather/ centre part porsche lettering cloth	/L	1	
	MN3	black/black	84		

Pos	Part Number	Name	Remarks	Qty	Model
	MN4	brown/brown	84		
	MN6	blue/blue	84		
	MN7	burgundy/burgundy	84		
	MN5	grey-beige/grey-beige	84		
(1A)	A 911 521 008 62	sports seat leather/ centre part porsche lettering cloth	/R	1	
	MN3	black/black	84		
	MN4	brown/brown	84		
	MN6	blue/blue	84		
	MN7	burgundy/burgundy	84		
	MN5	grey-beige/grey-beige	84		
1B	A 911 521 007 63	sports seat leather/ seat and backrest surface porsche lettering cloth	/L	1	
	LR9	black/black	84		
	LS1	brown/brown	84		
	LS3	blue/blue	84		
	LS4	burgundy/burgundy	84		
	LS2	grey-beige/grey-beige	84		
(1B)	A 911 521 008 63	sports seat leather/ seat and backrest surface porsche lettering cloth	/R	1	
	LR9	black/black	84		
	LS1	brown/brown	84		
	LS3	blue/blue	84		
	LS4	burgundy/burgundy	84		
	LS2	grey-beige/grey-beige	84		

Pos	Part Number	Name	Remarks	Qty	Model
2	900 012 123 00	pin A 2,5 X 12		2	
3	A 944 521 491 00	seat rail		2	
3	944 521 491 00	seat rail without locking device see tpi GR.8 NR.34		2	
4	A 928 521 489 02	seat rail with locking device	/L	1	
(4)	A 928 521 490 02	seat rail with locking device	/R	1	
(5)	911 521 533 01	handle f.longitudinal adjustment		2	
	01C	satin black			
6	N 014 761 2	pan-head screw M 6 X 12		8	
7	N 012 006 4	lock ring B 6		16	
8	900 075 057 02	hexagon-head bolt M 6 X 16		8	
9	928 521 101 04	threaded plate		8	
10	911 521 371 00	screw		2	
11	999 025 117 40	washer 12,5 X 32 X 1		X	
12	911 521 547 00	hexagon-head bolt M 10 X 20		8	
13	911 521 359 02	cover	/L	1	
(13)	911 521 360 02	cover	/R	1	
14	911 521 571 00	tensioning spring		2	
15	E 911 521 381 00	shifting wheel		2	
16	911 521 383 00	cover		2	
		- -- E N D -- -			

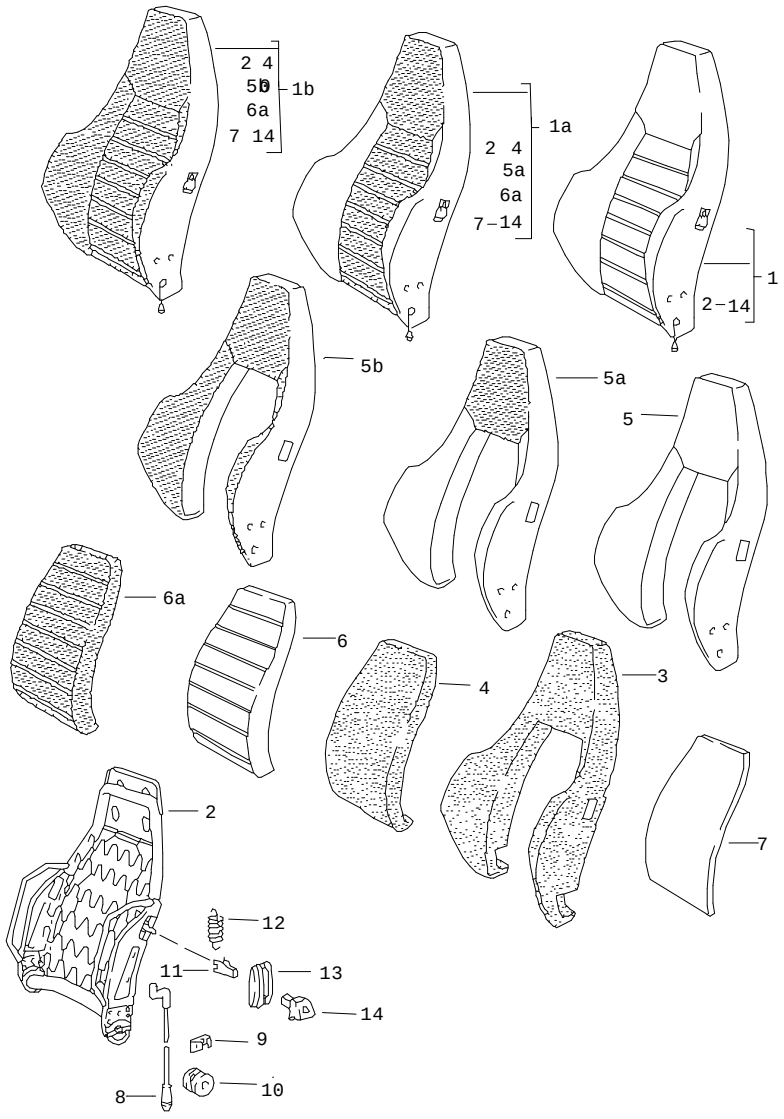

Pos	Part Number	Name	Remarks	Qty	Model
		sports seat manually adjustable backrest single parts	-84		
1	A 911 521 603 50	backrest leather	/L	1	
	KZ2	black			
	KZ3	blue			
	KZ5	brown			
	LG7	burgundy			
	KZ4	grey-beige			
	KZ6	can-can-red			
	LG4	pearl white			
	LG5	champagne			
	LG6	dark green			
(1)	A 911 521 604 50	backrest leather	/R	1	
	KZ2	black			
	KZ3	blue			
	KZ5	brown			
	LG7	burgundy			
	KZ4	grey-beige			
	KZ6	can-can-red			
	LG4	pearl white			
	LG5	champagne			
	LG6	dark green			
1A	A 911 521 603 51	backrest leather/ centre part checker board velour	/L	1	
	LH1	black/ light grey-black			

Pos	Part Number	Name	Remarks	Qty	Model
	LH2	brown/ brown-grey			
	LH3	blue/ blue-grey			
	LH4	burgundy/ burgundy-grey			
	LH5	grey-beige/ brown-grey			
(1A)	A 911 521 604 51	backrest leather/ centre part checker board velour	/R	1	
	LH1	black/ light grey-black			
	LH2	brown/ brown-grey			
	LH3	blue/ blue-grey			
	LH4	burgundy/ burgundy-grey			
	LH5	grey-beige/ brown-grey			
1A	A 911 521 603 51	backrest leather/ centre part uni-coloured cloth	/L	1	
	JN6	black/black			
	LJ1	brown/brown			
	JT4	blue/blue			
	LJ2	burgundy/burgundy			
	LJ3	grey-beige/grey-beige			
(1A)	A 911 521 604 51	backrest leather/ centre part uni-coloured cloth	/R	1	
	JN6	black/black			
	LJ1	brown/brown			
	JT4	blue/blue			
	LJ2	burgundy/burgundy			
	LJ3	grey-beige/grey-beige			
1A	A 911 521 603 51	backrest leather/ centre part pin stripe velour	/L	1	
	LS5	black/ black-white	84		
	LS6	brown/ brown-beige	84		
	LS8	blue/ blue-white	84		
	LS9	burgundy/ burgundy-white	84		
	LS7	grey-beige/ grey-beige-white	84		
(1A)	A 911 521 604 51	backrest leather/ centre part pin stripe velour	/R	1	
	LS5	black/ black-white	84		
	LS6	brown/ brown-beige	84		
	LS8	blue/ blue-white	84		
	LS9	burgundy/ burgundy-white	84		
	LS7	grey-beige/ grey-beige-white	84		
1A	A 911 521 603 51	backrest leather/ centre part porsche lettering cloth	/L	1	
	MN3	black/black	84		

Pos	Part Number	Name	Remarks	Qty	Model
	MN4	brown/brown	84		
	MN6	blue/blue	84		
	MN7	burgundy/burgundy	84		
	MN5	grey-beige/grey-beige	84		
(1A)	A 911 521 604 51	backrest leather/ centre part porsche lettering cloth	/R	1	
	MN3	black/black	84		
	MN4	brown/brown	84		
	MN6	blue/blue	84		
	MN7	burgundy/burgundy	84		
	MN5	grey-beige/grey-beige	84		
1B	A 911 521 603 52	backrest leather/ backrest surface porsche lettering cloth	/L	1	
	LR9	black/black	84		
	LS1	brown/brown	84		
	LS3	blue/blue	84		
	LS4	burgundy/burgundy	84		
	LS2	grey-beige/grey-beige	84		
(1B)	A 911 521 604 52	backrest leather/ backrest surface porsche lettering cloth	/R	1	
	LR9	black/black	84		
	LS1	brown/brown	84		
	LS3	blue/blue	84		
	LS4	burgundy/burgundy	84		
	LS2	grey-beige/grey-beige	84		
2	A 911 521 613 02	backrest frame	/L	1	
2	911 521 613 02	backrest frame	/L	1	
(2)	A 911 521 614 02	backrest frame	/R	1	
(2)	911 521 614 02	backrest frame	/R	1	
3	911 521 751 02	foam part backrest side part		2	
4	E 911 521 104 02	foam part backrest cushion		2	
5	A 911 521 072 70	backrest side part cover leather		2	
	KZ2	black			
	KZ3	blue			
	KZ5	brown			
	LG7	burgundy			
	KZ4	grey-beige			
	KZ6	can-can-red			
	LG4	pearl white			
	LG5	champagne			
	LG6	dark green			
5A	A 911 521 072 71	backrest side part cover leather/ head rest checker board velour		2	
	LH1	black/ light grey-black			
	LH2	brown/ brown-grey			
	LH3	blue/ blue-grey			
	LH4	burgundy/ burgundy-grey			
	LH5	grey-beige/ brown-grey			

Pos	Part Number	Name	Remarks	Qty	Model
5A	A 911 521 072 71	backrest side part cover leather/ head rest uni-coloured cloth		2	
	JN6	black/black			
	LJ1	brown/brown			
	JT4	blue/blue			
	LJ2	burgundy/burgundy			
	LJ3	grey-beige/grey-beige			
5A	A 911 521 072 71	backrest side part cover leather/ head rest pin stripe velour		2	
	LS5	black/ black-white	84		
	LS6	brown/ brown-beige	84		
	LS8	blue/ blue-white	84		
	LS9	burgundy/ burgundy-white	84		
	LS7	grey-beige/ grey-beige-white	84		
5A	A 911 521 072 71	backrest side part cover leather/ head rest porsche lettering cloth		2	
	MN3	black/black	84		
	MN4	brown/brown	84		
	MN6	blue/blue	84		
	MN7	burgundy/burgundy	84		
	MN5	grey-beige/grey-beige	84		
5B	A 911 521 072 72	backrest side part cover leather/ backrest surface porsche lettering cloth		2	
	LR9	black/black	84		
	LS1	brown/brown	84		
	LS3	blue/blue	84		
	LS4	burgundy/burgundy	84		
	LS2	grey-beige/grey-beige	84		
6	A 911 521 403 50	backrest cushion cover leather		2	
	KZ2	black			
	KZ3	blue			
	KZ5	brown			
	LG7	burgundy			
	KZ4	grey-beige			
	KZ6	can-can-red			
	LG4	pearl white			
	LG5	champagne			
	LG6	dark green			
6A	A 911 521 403 06	backrest cushion cover checker board velour		2	
	4FH	light grey-black			
	5RH	brown-grey			
	7GH	blue-grey			
	9LH	burgundy-grey			
6A	A 911 521 403 06	backrest cushion cover uni-coloured cloth		2	
	70F	black			
	7NU	brown			
	30C	blue			
	5MU	burgundy			
	8FU	grey-beige			

Pos	Part Number	Name	Remarks	Qty	Model
6A	A 911 521 403 06	backrest cushion cover pin stripe velour		2	
	7BN	black-white			
	3NN	brown-beige			
	8GJ	blue-white			
	1MJ	burgundy-white			
	9FN	grey-beige-white			
6A	A 911 521 403 06	backrest cushion cover porsche lettering cloth		2	
	4CR	black			
	6TR	brown			
	5HR	blue			
	2LR	burgundy			
	8RR	grey-beige			
7	E 911 521 575 00	cover		2	
8	911 521 361 00	wire pull		2	
9	911 521 369 00	terminal wire pull		2	
10	911 521 343 00	guide bush		2	
11	311 881 247	clamp		2	
12	311 881 287 A	spring actuating lever		2	
13	911 521 815 00	rose actuating lever		2	
	01C	satin black			
14	911 521 817 00	control button		2	
	01C	satin black			
		- -- E N D -- -			

Pos	Part Number	Name	Remarks	Qty	Model

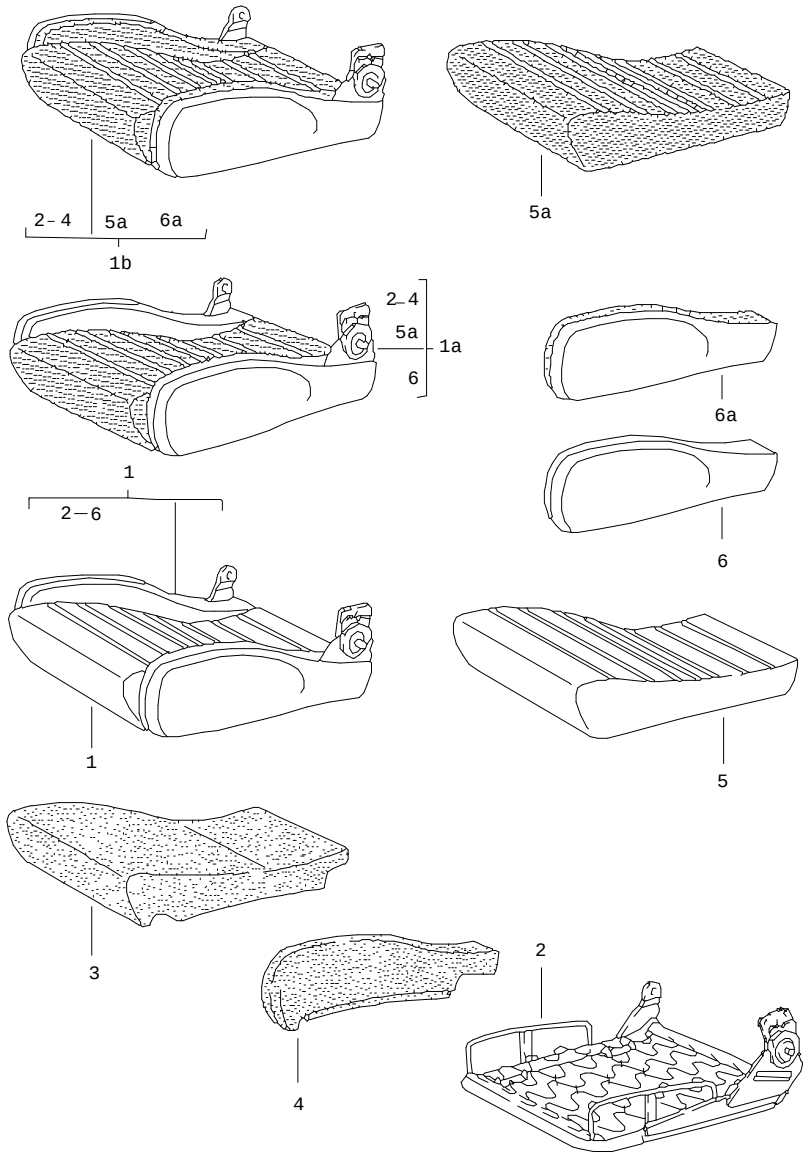

Pos	Part Number	Name	Remarks	Qty	Model
		sports seat manually adjustable cushion single parts	-84		
1	A 911 521 605 50	seat cushion leather	/L	1	
	KZ2	black			
	KZ3	blue			
	KZ5	brown			
	LG7	burgundy			
	KZ4	grey-beige			
	KZ6	can-can-red			
	LG4	pearl white			
	LG5	champagne			
	LG6	dark green			
(1)	A 911 521 606 50	seat cushion leather	/R	1	
	KZ2	black			
	KZ3	blue			
	KZ5	brown			
	LG7	burgundy			
	KZ4	grey-beige			
	KZ6	can-can-red			
	LG4	pearl white			
	LG5	champagne			
	LG6	dark green			
1A	A 911 521 605 51	seat cushion leather/ centre part checker board velour	/L	1	
	LH1	black/ light grey-black			

Pos	Part Number	Name	Remarks	Qty	Model
	LH2	brown/ brown-grey			
	LH3	blue/ blue-grey			
	LH4	burgundy/ burgundy-grey			
	LH5	grey-beige/ brown-grey			
(1A)	A 911 521 606 51	seat cushion leather/ centre part checker board velour	/R	1	
	LH1	black/ light grey-black			
	LH2	brown/ brown-grey			
	LH3	blue/ blue-grey			
	LH4	burgundy/ burgundy-grey			
	LH5	grey-beige/ brown-grey			
1A	A 911 521 605 51	seat cushion leather/ centre part uni-coloured cloth	/L	1	
	JN6	black/black			
	LJ1	brown/brown			
	JT4	blue/blue			
	LJ2	burgundy/burgundy			
	LJ3	grey-beige/grey-beige			
(1A)	A 911 521 606 51	seat cushion leather/ centre part uni-coloured cloth	/R	1	
	JN6	black/black			
	LJ1	brown/brown			
	JT4	blue/blue			
	LJ2	burgundy/burgundy			
	LJ3	grey-beige/grey-beige			
1A	A 911 521 605 51	seat cushion leather/ centre part pin stripe velour	/L	1	
	LS5	black/ black-white	84		
	LS6	brown/ brown-beige	84		
	LS8	blue/ blue-white	84		
	LS9	burgundy/ burgundy-white	84		
	LS7	grey-beige/ grey-beige-white	84		
(1A)	A 911 521 606 51	seat cushion leather/ centre part pin stripe velour	/R	1	
	LS5	black/ black-white	84		
	LS6	brown/ brown-beige	84		
	LS8	blue/ blue-white	84		
	LS9	burgundy/ burgundy-white	84		
	LS7	grey-beige/ grey-beige-white	84		
1A	A 911 521 605 51	seat cushion leather/ centre part porsche lettering cloth	/L	1	
	MN3	black/black	84		

Pos	Part Number	Name	Remarks	Qty	Model
	MN4	brown/brown	84		
	MN6	blue/blue	84		
	MN7	burgundy/burgundy	84		
	MN5	grey-beige/grey-beige	84		
(1A)	A 911 521 606 51	seat cushion leather/ centre part porsche lettering cloth	/R	1	
	MN3	black/black	84		
	MN4	brown/brown	84		
	MN6	blue/blue	84		
	MN7	burgundy/burgundy	84		
	MN5	grey-beige/grey-beige	84		
1B	A 911 521 605 52	seat cushion seat surface porsche lettering cloth	/L	1	
	LR9	black/black			
	LS1	brown/brown			
	LS3	blue/blue			
	LS4	burgundy/burgundy			
	LS2	grey-beige/grey-beige			
(1B)	A 911 521 606 52	seat cushion seat surface porsche lettering cloth	/R	1	
	LR9	black/black			
	LS1	brown/brown			
	LS3	blue/blue			
	LS4	burgundy/burgundy			
	LS2	grey-beige/grey-beige			
2	911 521 621 01	seat frame	/L	1	
(2)	E 911 521 622 01	seat frame	/R	1	
3	E 911 521 697 02	foam part seat cushion		2	
4	911 521 683 02	foam part cushion left seat	/L	1	
(4)	911 521 654 02	foam part cushion left seat	/R	1	
(4)	911 521 653 02	foam part cushion right seat	/L	1	
(4)	E 911 521 684 02	foam part cushion right seat	/R	1	
		leather			
5A	A 911 521 439 06	cover for cushion checker board velour		2	
	4FH	light grey-black			
	5RH	brown-grey			
	7GH	blue-grey			
	9LH	burgundy-grey			
5A	A 911 521 439 06	cover for cushion uni-coloured cloth		2	
	70F	black			
	7NU	brown			
	30C	blue			
	5MU	burgundy			
	8FU	grey-beige			
5A	A 911 521 439 06	cover for cushion pin stripe velour		2	
	7BN	black-white	84		
	3NN	brown-beige	84		
	8GJ	blue-white	84		

Pos	Part Number	Name	Remarks	Qty	Model
	1MJ	burgundy-white	84		
	9FN	grey-beige-white	84		
5A	A 911 521 439 06	cover for cushion porsche lettering cloth		2	
	4CR	black			
	6TR	brown			
	5HR	blue			
	2LR	burgundy			
	8RR	grey-beige			
6	A 911 521 631 50	seat side part cover left seat leather	/L	1	
	KZ2	black			
	KZ3	blue			
	KZ5	brown			
	LG7	burgundy			
	KZ4	grey-beige			
	KZ6	can-can-red			
	LG4	pearl white			
	LG5	champagne			
	LG6	dark green			
(6)	A 911 521 632 50	seat side part cover left seat leather	/R	1	
	KZ2	black			
	KZ3	blue			
	KZ5	brown			
	LG7	burgundy			
	KZ4	grey-beige			
	KZ6	can-can-red			
	LG4	pearl white			
	LG5	champagne			
	LG6	dark green			
(6)	A 911 521 633 50	seat side part cover right seat leather	/L	1	
	KZ2	black			
	KZ3	blue			
	KZ5	brown			
	LG7	burgundy			
	KZ4	grey-beige			
	KZ6	can-can-red			
	LG4	pearl white			
	LG5	champagne			
	LG6	dark green			
(6)	A 911 521 634 50	seat side part cover right seat leather	/R	1	
	KZ2	black			
	KZ3	blue			
	KZ5	brown			
	LG7	burgundy			
	KZ4	grey-beige			
	KZ6	can-can-red			
	LG4	pearl white			
	LG5	champagne			
	LG6	dark green			

Pos	Part Number	Name	Remarks	Qty	Model
6A	A 911 521 631 51	seat side part cover left seat leather/ seat surface porsche lettering cloth	/L	1	
	LR9	black/black	84		
	LS1	brown/brown	84		
	LS3	blue/blue	84		
	LS4	burgundy/burgundy	84		
	LS2	grey-beige/grey-beige	84		
(6A)	A 911 521 632 51	seat side part cover left seat leather/ seat surface porsche lettering cloth	/R	1	
	LR9	black/black	84		
	LS1	brown/brown	84		
	LS3	blue/blue	84		
	LS4	burgundy/burgundy	84		
	LS2	grey-beige/grey-beige	84		
(6A)	A 911 521 633 51	seat side part cover right seat leather/ seat surface porsche lettering cloth	/L	1	
	LR9	black/black	84		
	LS1	brown/brown	84		
	LS3	blue/blue	84		
	LS4	burgundy/burgundy	84		
	LS2	grey-beige/grey-beige	84		
(6A)	A 911 521 634 51	seat side part cover right seat leather/ seat surface porsche lettering cloth	/R	1	
	LR9	black/black	84		
	LS1	brown/brown	84		
	LS3	blue/blue	84		
	LS4	burgundy/burgundy	84		
	LS2	grey-beige/grey-beige	84		

- -- E N D -- -

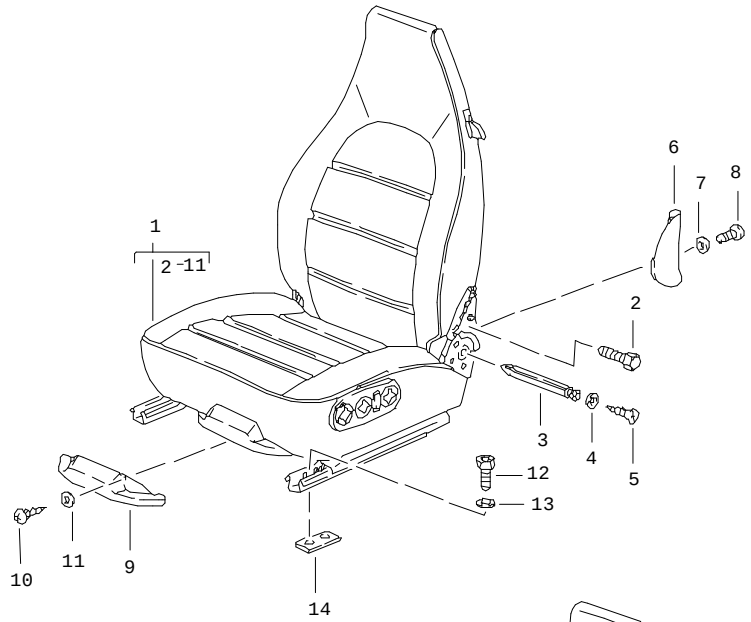

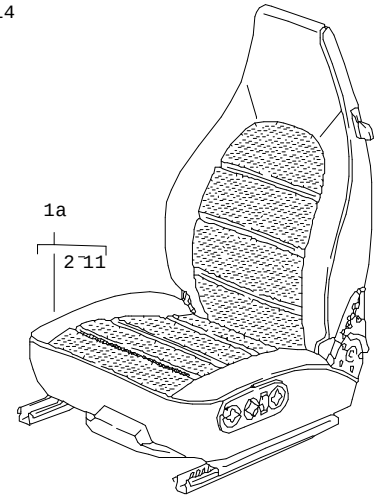

Pos	Part Number	Name	Remarks	Qty	Model
		front seat	85-		
1	928 521 001 86	front seat without heating leather	/L	1	
	KZ2	black			
	KZ3	blue			
	KZ5	brown			
	LG7	burgundy			
	QC2	greyish green			
	LG6	dark green			
	KZ6	can-can-red			
	LG4	pearl white			
	LG5	champagne			
	PY9	ocean blue			
	PZ1	wild buffalo			
	KZ4	grey-beige	86		
(1)	928 521 002 86	front seat without heating leather	/R	1	
	KZ2	black			
	KZ3	blue			
	KZ5	brown			
	LG7	burgundy			
	QC2	greyish green			
	LG6	dark green			
	KZ6	can-can-red			
	LG4	pearl white			
	LG5	champagne			
	PY9	ocean blue			

Pos	Part Number	Name	Remarks	Qty	Model
	PZ1	wild buffalo			
	KZ4	grey-beige	86		
(1)	928 521 001 89	front seat with heating leather	/L	1	
	KZ2	black			
	KZ3	blue			
	KZ5	brown			
	LG7	burgundy			
	QC2	greyish green			
	LG6	dark green			
	KZ6	can-can-red			
	LG4	pearl white			
	LG5	champagne			
	PY9	ocean blue			
	PZ1	wild buffalo			
	KZ4	grey-beige	86		
(1)	928 521 002 89	front seat with heating leather	/R	1	
	KZ2	black			
	KZ3	blue			
	KZ5	brown			
	LG7	burgundy			
	QC2	greyish green			
	LG6	dark green			
	KZ6	can-can-red			
	LG4	pearl white			
	LG5	champagne			

Pos	Part Number	Name	Remarks	Qty	Model
	PY9	ocean blue			
	PZ1	wild buffalo			
	KZ4	grey-beige	86		
1A	928 521 001 88	front seat without heating leather/ centre part pin stripe velour	/L	1	
	LS5	black/ black-white			
	LS6	brown/ brown-beige			
	LS8	blue/ blue-white			
	LS9	burgundy/ burgundy-white			
	QA7	greyish green/ greyish green-white			
	LS7	grey-beige/ grey-beige-white	86		
(1A)	928 521 002 88	front seat without heating leather/ centre part pin stripe velour	/R	1	
	LS5	black/ black-white			
	LS6	brown/ brown-beige			
	LS8	blue/ blue-white			
	LS9	burgundy/ burgundy-white			
	QA7	greyish green/ greyish green-white			
	LS7	grey-beige/ grey-beige-white	86		

Pos	Part Number	Name	Remarks	Qty	Model
(1A)	928 521 001 90	front seat with heating leather/ centre part pin stripe velour	/L	1	
	LS5	black/ black-white			
	LS6	brown/ brown-beige			
	LS8	blue/ blue-white			
	LS9	burgundy/ burgundy-white			
	QA7	greyish green/ greyish green-white			
	LS7	grey-beige/ grey-beige-white	86		
(1A)	928 521 002 90	front seat with heating leather/ centre part pin stripe velour	/R	1	
	LS5	black/ black-white			
	LS6	brown/ brown-beige			
	LS8	blue/ blue-white			
	LS9	burgundy/ burgundy-white			
	QA7	greyish green/ greyish green-white			
	LS7	grey-beige/ grey-beige-white	86		
1A	928 521 001 88	front seat without heating leather/ centre part pin stripe flannel	/L	1	
	QB1	black/anthracite			
	QB3	brown/brown			
	QB5	blue/blue			
	QB7	burgundy/burgundy			
	QA8	greyish green/grey-green			
(1A)	928 521 002 88	front seat without heating leather/ centre part pin stripe flannel	/R	1	
	QB1	black/anthracite			
	QB3	brown/brown			
	QB5	blue/blue			
	QB7	burgundy/burgundy			
	QA8	greyish green/grey-green			
(1A)	928 521 001 90	front seat with heating leather/ centre part pin stripe flannel	/L	1	
	QB1	black/anthracite			
	QB3	brown/brown			
	QB5	blue/blue			
	QB7	burgundy/burgundy			
	QA8	greyish green/grey-green			
(1A)	928 521 002 90	front seat with heating leather/ centre part pin stripe flannel	/R	1	
	QB1	black/anthracite			
	QB3	brown/brown			
	QB5	blue/blue			

Pos	Part Number	Name	Remarks	Qty	Model
	QB7	burgundy/burgundy			
	QA8	greyish green/grey-green			
1A	928 521 001 88	front seat without heating leather/ centre part porsche lettering cloth	/L	1	
	QB2	black/black			
	QB4	brown/brown			
	QB6	blue/blue			
	QB8	burgundy/burgundy			
	QA9	greyish green/grey-green			
	RU1	grey-beige/grey-beige	86		
(1A)	928 521 002 88	front seat without heating leather/ centre part porsche lettering cloth	/R	1	
	QB2	black/black			
	QB4	brown/brown			
	QB6	blue/blue			
	QB8	burgundy/burgundy			
	QA9	greyish green/grey-green			
	RU1	grey-beige/grey-beige	86		
(1A)	928 521 001 90	front seat with heating leather/ centre part porsche lettering cloth	/L	1	
	QB2	black/black			
	QB4	brown/brown			
	QB6	blue/blue			
	QB8	burgundy/burgundy			
	QA9	greyish green/grey-green			
	RU1	grey-beige/grey-beige	86		
(1A)	928 521 002 90	front seat with heating leather/ centre part porsche lettering cloth	/R	1	
	QB2	black/black			
	QB4	brown/brown			
	QB6	blue/blue			
	QB8	burgundy/burgundy			
	QA9	greyish green/grey-green			
	RU1	grey-beige/grey-beige	86		
2	911 521 547 00	hexagon-head bolt M 10 X 20		8	
3	928 521 717 02	square rod for backrest adjustment		4	
4	928 521 716 02	lock washer for backrest adjustment		4	
5	900 249 004 02	countersunk-head screw M 4 X 8 for backrest adjustment		4	
6	928 521 147 02	cover	/L	2	
	01C	black			
	4RB	brown			
	5HJ	blue			
	9MM	burgundy			
	1DJ	greyish green			
	3UC	grey-beige	86		
(6)	928 521 148 02	cover	/R	2	
	01C	black			
	4RB	brown			

Pos	Part Number	Name	Remarks	Qty	Model
	5HJ	blue			
	9MM	burgundy			
	1DJ	greyish green			
	3UC	grey-beige	86		
7	900 025 044 07	washer A 4,3		8	
8	900 143 113 07	tapping screw B 4,2 X 13	-85	8	
(8)	N 013 962 3	tapping screw B 3,9 X 16	86	8	
9	928 521 760 02	cover		2	
10	N 013 959 3	tapping screw B 3,5 X 16		4	
11	900 025 013 07	washer A 3,7		4	
12	900 119 030 02	pan-head screw M 8 X 20		12	
13	900 031 001 02	washer 8,4		16	
14	928 521 101 05	threaded plate		4	
-	999 703 334 40	plug seat rail support		2	
		- -- E N D -- -			

Pos	Part Number	Name	Remarks	Qty	Model

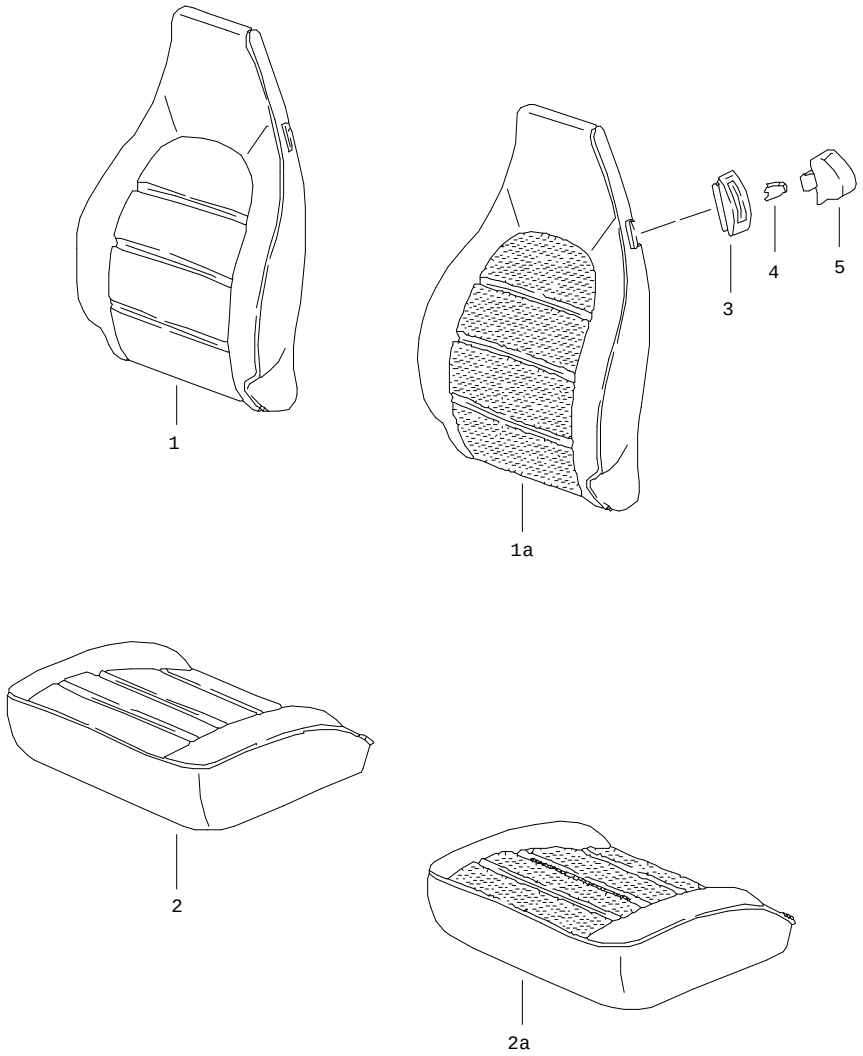

Pos	Part Number	Name	Remarks	Qty	Model
		front seat cover heating element	85-		
1	928 521 071 87	backrest cover leather		2	
	KZ2	black			
	KZ3	blue			
	KZ5	brown			
	LG7	burgundy			
	QC2	greyish green			
	LG6	dark green			
	KZ6	can-can-red			
	LG4	pearl white			
	LG5	champagne			
	PY9	ocean blue			
	PZ1	wild buffalo			
	KZ4	grey-beige	86		
1A	928 521 071 89	backrest cover leather/ centre part pin stripe velour		2	
	LS5	black/ black-white			
	LS6	brown/ brown-beige			
	LS8	blue/ blue-white			
	LS9	burgundy/ burgundy-white			
	QA7	greyish green/ greyish green-white			
	LS7	grey-beige/ grey-beige-white	86		

Pos	Part Number	Name	Remarks	Qty	Model
1A	928 521 071 89	backrest cover leather/ centre part pin stripe flannel		2	
	QB1	black/anthracite			
	QB3	brown/brown			
	QB5	blue/blue			
	QB7	burgundy/burgundy			
	QA8	greyish green/grey-green			
1A	928 521 071 89	backrest cover leather/ centre part porsche lettering cloth		2	
	QB2	black/black			
	QB4	brown/brown			
	QB6	blue/blue			
	QB8	burgundy/burgundy			
	QA9	greyish green/grey-green			
	RU1	grey-beige/grey-beige	86		
2	928 521 037 87	seat cover leather		2	
	KZ2	black			
	KZ3	blue			
	KZ5	brown			
	LG7	burgundy			
	QC2	greyish green			
	LG6	dark green			
	KZ6	can-can-red			
	LG4	pearl white			
	LG5	champagne			
	PY9	ocean blue			
	PZ1	wild buffalo			
	KZ4	grey-beige	86		
2A	928 521 037 89	seat cover leather/ centre part pin stripe velour		2	
	LS5	black/ black-white			
	LS6	brown/ brown-beige			
	LS8	blue/ blue-white			
	LS9	burgundy/ burgundy-white			
	QA7	greyish green/ greyish green-white			
	LS7	grey-beige/ grey-beige-white	86		
2A	928 521 037 89	seat cover leather/ centre part pin stripe flannel		2	
	QB1	black/anthracite			
	QB3	brown/brown			
	QB5	blue/blue			
	QB7	burgundy/burgundy			
	QA8	greyish green/grey-green			
2A	928 521 037 89	seat cover leather/ centre part porsche lettering cloth		2	
	QB2	black/black			
	QB4	brown/brown			
	QB6	blue/blue			
	QB8	burgundy/burgundy			

Pos	Part Number	Name	Remarks	Qty	Model
	QA9	greyish green/grey-green			
	RU1	grey-beige/grey-beige	86		
3	911 521 815 00	rose		4	
	01C	satin black			
4	311 881 247	clamp		4	
5	911 521 817 00	control button		4	
	01C	satin black			
-	A 928 653 104 01	heating element		2	M 139/340
-	928 653 104 01	heating element backrest		2	M 139/340
-	A 928 653 102 01	heating element		2	M 139/340
-	928 653 102 01	heating element seat cushion		2	M 139/340
		- -- E N D -- -			

Pos	Part Number	Name	Remarks	Qty	Model

Model	Year	MG	SG	Illustration	Restrictions	Update	14:56	01.09.2004	PORSCHE	PET	PORSCHE
928	86	8	08	808-30		179					

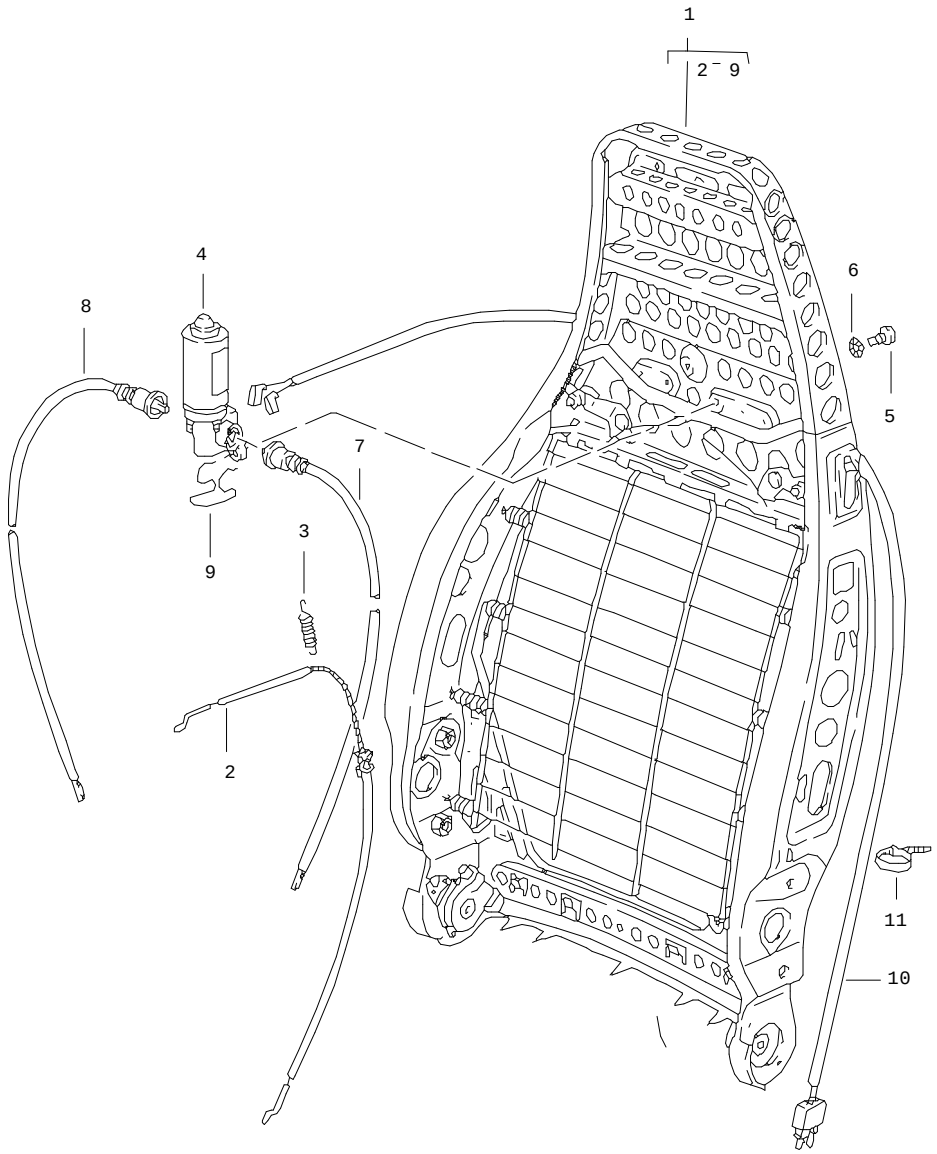

Pos	Part Number	Name	Remarks	Qty	Model
		front seat backrest frame single parts	85-		
1	A 928 521 027 10	backrest frame		2	
1	928 521 027 10	backrest frame		2	
2	928 521 093 02	bowden cable		4	
3	311 881 287 A	spring actuating lever		4	
4	A 928 624 126 01	geared motor backrest		2	
4	928 624 126 01	geared motor backrest		2	
5	E N 014 128 4	oval-head screw M 5 X 8		4	
6	N 012 130 2	shake-proof washer A 5,3		4	
7	928 521 617 02	shaft backrest	/L	2	
8	928 521 618 02	shaft backrest	/R	2	
9	928 521 675 02	spring		2	
10	928 612 343 00	connecting line backrest		2	
11	N 020 904 4	tie-wrap 6,5 X 120		10	
		- -- E N D -- -			

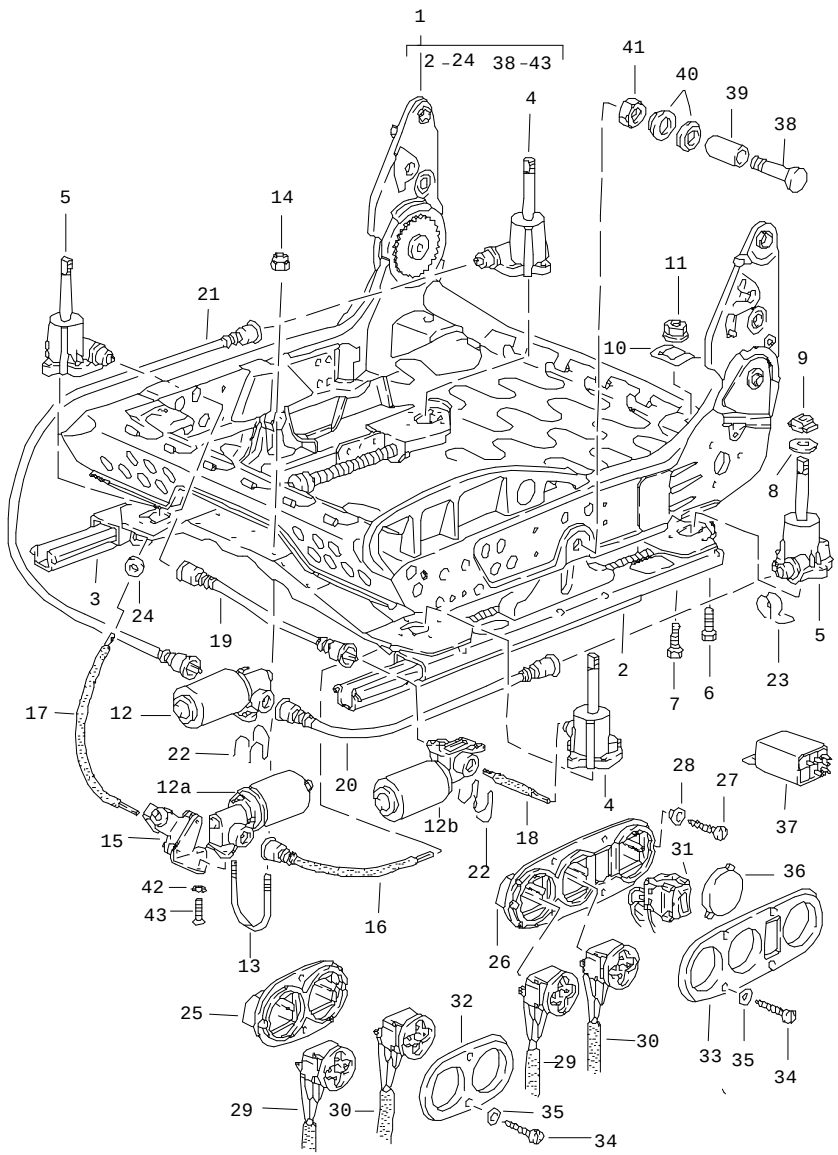

Pos	Part Number	Name	Remarks	Qty	Model
		front seat seat frame single parts	85-		
1	A 928 521 069 11	seat frame F >>92GS8 41467 F >>92GS8 49630	/L	1	(J)
1	993 521 069 03	seat frame	/L	1	
(1)	A 928 521 069 13	seat frame F 92GS8 41468>> F 92GS8 49631>>	/L	1	
(1)	993 521 069 03	seat frame	/L	1	
(1)	A 928 521 070 11	seat frame F >>92GS8 41467 F >>92GS8 49630	/R	1	(J)
(1)	993 521 070 03	seat frame	/R	1	
(1)	A 928 521 070 13	seat frame F 92GS8 41468>> F 92GS8 49631>>	/R	1	
(1)	993 521 070 03	seat frame	/R	1	
2	A 928 521 489 08	seat rail left seat outer F >>92GS8 41467 F >>92GS8 49630	/L	1	(J)
(2)	928 521 489 08	seat rail left seat outer F 92GS8 41468>> F 92GS8 49631>>	/L	1	
(2)	A 928 521 490 08	seat rail right seat outer F >>92GS8 41467 F >>92GS8 49630	/R	1	(J)
(2)	928 521 490 08	seat rail right seat outer F 92GS8 41468>> F 92GS8 49631>>	/R	1	

Pos	Part Number	Name	Remarks	Qty	Model
(3)	A 928 521 491 11	seat rail right seat inner F >>92GS8 41467 F >>92GS8 49630	/R	1	 (J)
(3)	928 521 491 11	seat rail right seat inner F 92GS8 41468>> F 92GS8 49631>>	/R	1	
3	A 928 521 492 11	seat rail left seat inner F >>92GS8 41467 F >>92GS8 49630	/L	1	 (J)
(3)	928 521 492 11	seat rail left seat inner F 92GS8 41468>> F 92GS8 49631>>	/L	1	
4	A 928 521 721 03	lifting gear left front, right rear	/L/V /R/H	2	
4	928 521 721 03	lifting gear left front, right rear	/L/V /R/H	2	
5	A 928 521 722 03	lifting gear right front, left rear	/R/V /L/H	2	
5	928 521 722 03	lifting gear right front, left rear	/R/V /L/H	2	
6	999 217 033 01	locking screw M 6 X 16		20	
7	900 186 032 02	pan-head screw M 6 X 16		8	
8	999 025 129 40	washer 10,2 X 30 X 1,5		8	
9	928 521 727 02	slide		8	
10	928 521 723 02	guide spring		8	
11	928 521 730 02	nut		8	
12	A 928 624 126 01	geared motor rear vertical adjustment		2	
12	928 624 126 01	geared motor rear vertical adjustment		2	
12A	A 928 624 126 01	geared motor front vertical adjustment		2	
12A	928 624 126 01	geared motor front vertical adjustment		2	
12B	A 928 624 126 01	geared motor front vertical adjustment		2	
12B	928 624 126 01	geared motor front vertical adjustment		2	
13	999 222 001 02	stirrup bolt M 4		6	
14	900 910 006 02	lock nut M 4		12	
15	E 928 521 145 02	transmission emergency operation		2	
16	928 521 251 02	shaft	/L	2	
17	928 521 252 03	shaft	/R	2	
18	A 928 521 671 03	shaft front vertical adjustment	/L	2	
18	928 521 671 03	shaft front vertical adjustment	/L	2	
19	928 521 672 02	pliable shaft front vertical adjustment	/R	2	
20	A 928 521 673 05	flexible shaft rear vertical adjustment	/L	2	
20	928 521 673 05	shaft rear vertical adjustment	/L	2	
21	928 521 674 02	pliable shaft rear vertical adjustment	/R	2	
22	928 521 675 02	spring		6	
23	928 521 699 00	spring		6	
24	999 591 730 00	lock washer 10,0		6	
25	928 521 559 04	switch part		2	

Pos	Part Number	Name	Remarks	Qty	Model
26	928 521 559 02	switch part	/L	1	M 139
(26)	928 521 560 02	switch part	/R	1	M 340
27	N 013 988 1	tapping screw B 3,5 X 16		2	
28	999 591 849 07	cone washer B 3,5		2	
29	928 613 182 00	switch f.longitudinal adjustment front vertical adjustment		2	
30	928 613 183 00	switch for backrest adjustment rear vertical adjustment		2	
31	928 613 187 01	switch seat heater	/L	1	M 139
(31)	928 613 188 01	switch seat heater	/R	1	M 340
32	928 521 561 04	trim for switch		2	
	01C	satin black			
33	928 521 561 03	trim for switch		2	M 139/340
	01C	satin black			
34	N 013 959 3	tapping screw B 3,5 X 16		4	
35	900 025 013 07	washer A 3,7		4	
36	928 613 425 00	cover		X	M 139/340
37	928 618 521 00	relay seat heater		2	M 139/340
38	928 521 681 02	bolt		4	
39	928 521 685 02	bush		4	
40	928 521 683 02	washer		8	
41	900 034 003 02	hexagon nut M 10		4	
42	N 012 130 2	shake-proof washer A 5,3		4	
43	E N 014 128 4	oval-head screw M 5 X 8		4	

- -- E N D -- -

Model	Year	MG	SG	Illustration	Restrictions	Update	14:56	01.09.2004	PORSCHE	PET	PORSCHE
928	86	8	08	808-35		179					

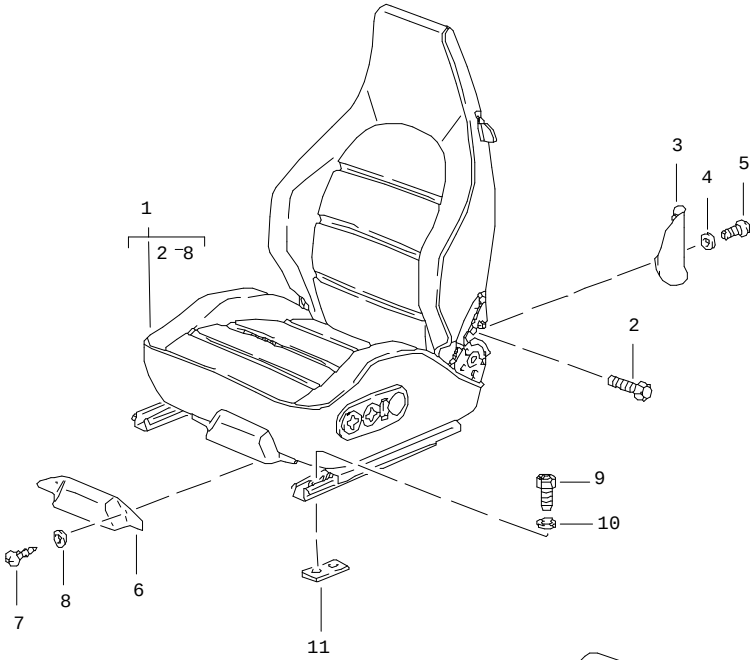

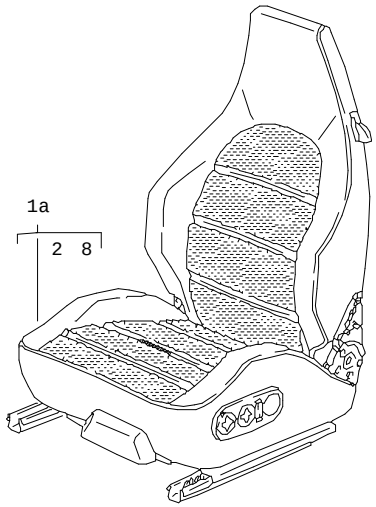

Pos	Part Number	Name	Remarks	Qty	Model
		sports seat electrically adjustable	85-		
1	928 521 005 52	sports seat without heating leather	/L	1	
	KZ2	black			
	KZ3	blue			
	KZ5	brown			
	LG7	burgundy			
	QC2	greyish green			
	LG6	dark green			
	KZ6	can-can-red			
	LG4	pearl white			
	LG5	champagne			
	PY9	ocean blue			
	PZ1	wild buffalo			
	KZ4	grey-beige	86		
(1)	928 521 006 52	sports seat without heating leather	/R	1	
	KZ2	black			
	KZ3	blue			
	KZ5	brown			
	LG7	burgundy			
	QC2	greyish green			
	LG6	dark green			
	KZ6	can-can-red			
	LG4	pearl white			
	LG5	champagne			
	PY9	ocean blue			

Pos	Part Number	Name	Remarks	Qty	Model
	PZ1	wild buffalo			
	KZ4	grey-beige	86		
(1)	928 521 005 55	sports seat with heating leather	/L	1	
	KZ2	black			
	KZ3	blue			
	KZ5	brown			
	LG7	burgundy			
	QC2	greyish green			
	LG6	dark green			
	KZ6	can-can-red			
	LG4	pearl white			
	LG5	champagne			
	PY9	ocean blue			
	PZ1	wild buffalo			
	KZ4	grey-beige	86		
(1)	928 521 006 55	sports seat with heating leather	/R	1	
	KZ2	black			
	KZ3	blue			
	KZ5	brown			
	LG7	burgundy			
	QC2	greyish green			
	LG6	dark green			
	KZ6	can-can-red			
	LG4	pearl white			
	LG5	champagne			

Pos	Part Number	Name	Remarks	Qty	Model
	PY9	ocean blue			
	PZ1	wild buffalo			
	KZ4	grey-beige	86		
1A	928 521 005 54	sports seat without heating leather/ centre part pin stripe velour	/L	1	
	LS5	black/ black-white			
	LS6	brown/ brown-beige			
	LS8	blue/ blue-white			
	LS9	burgundy/ burgundy-white			
	QA7	greyish green/ greyish green-white			
	LS7	grey-beige/ grey-beige-white	86		
(1A)	928 521 006 54	sports seat without heating leather/ centre part pin stripe velour	/R	1	
	LS5	black/ black-white			
	LS6	brown/ brown-beige			
	LS8	blue/ blue-white			
	LS9	burgundy/ burgundy-white			
	QA7	greyish green/ greyish green-white			
	LS7	grey-beige/ grey-beige-white	86		

Pos	Part Number	Name	Remarks	Qty	Model
(1A)	928 521 005 56	sports seat with heating leather/ centre part pin stripe velour	/L	1	
	LS5	black/ black-white			
	LS6	brown/ brown-beige			
	LS8	blue/ blue-white			
	LS9	burgundy/ burgundy-white			
	QA7	greyish green/ greyish green-white			
	LS7	grey-beige/ grey-beige-white	86		
(1A)	928 521 006 56	sports seat with heating leather/ centre part pin stripe velour	/R	1	
	LS5	black/ black-white			
	LS6	brown/ brown-beige			
	LS8	blue/ blue-white			
	LS9	burgundy/ burgundy-white			
	QA7	greyish green/ greyish green-white			
	LS7	grey-beige/ grey-beige-white	86		
1A	928 521 005 54	sports seat without heating leather/ centre part pin stripe flannel	/L	1	
	QB1	black/anthracite			
	QB3	brown/brown			
	QB5	blue/blue			
	QB7	burgundy/burgundy			
	QA8	greyish green/grey-green			
(1A)	928 521 006 54	sports seat without heating leather/ centre part pin stripe flannel	/R	1	
	QB1	black/anthracite			
	QB3	brown/brown			
	QB5	blue/blue			
	QB7	burgundy/burgundy			
	QA8	greyish green/grey-green			
(1A)	928 521 005 56	sports seat with heating leather/ centre part pin stripe flannel	/L	1	
	QB1	black/anthracite			
	QB3	brown/brown			
	QB5	blue/blue			
	QB7	burgundy/burgundy			
	QA8	greyish green/grey-green			
(1A)	928 521 006 56	sports seat with heating leather/ centre part pin stripe flannel	/R	1	
	QB1	black/anthracite			
	QB3	brown/brown			
	QB5	blue/blue			

Pos	Part Number	Name	Remarks	Qty	Model
	QB7	burgundy/burgundy			
	QA8	greyish green/grey-green			
1A	928 521 005 54	sports seat without heating leather/ centre part porsche lettering cloth	/L	1	
	QB2	black/black			
	QB4	brown/brown			
	QB6	blue/blue			
	QB8	burgundy/burgundy			
	QA9	greyish green/grey-green			
	RU1	grey-beige/grey-beige	86		
(1A)	928 521 006 54	sports seat without heating leather/ centre part porsche lettering cloth	/R	1	
	QB2	black/black			
	QB4	brown/brown			
	QB6	blue/blue			
	QB8	burgundy/burgundy			
	QA9	greyish green/grey-green			
	RU1	grey-beige/grey-beige	86		
(1A)	928 521 005 56	sports seat with heating leather/ centre part porsche lettering cloth	/L	1	
	QB2	black/black			
	QB4	brown/brown			
	QB6	blue/blue			
	QB8	burgundy/burgundy			
	QA9	greyish green/grey-green			
	RU1	grey-beige/grey-beige	86		
(1A)	928 521 006 56	sports seat with heating leather/ centre part porsche lettering cloth	/R	1	
	QB2	black/black			
	QB4	brown/brown			
	QB6	blue/blue			
	QB8	burgundy/burgundy			
	QA9	greyish green/grey-green			
	RU1	grey-beige/grey-beige	86		
2	911 521 547 00	hexagon-head bolt M 10 X 20		4	
3	928 521 147 02	cover	/L	1	
	01C	black			
	4RB	brown			
	5HJ	blue			
	9MM	burgundy			
	1DJ	greyish green			
	3UC	grey-beige	86		
(3)	928 521 148 02	cover	/R	1	
	01C	black			
	4RB	brown			
	5HJ	blue			
	9MM	burgundy			
	1DJ	greyish green			
	3UC	grey-beige	86		

Pos	Part Number	Name	Remarks	Qty	Model	Pos	Part Number	Name	Remarks	Qty	Model
4	900 025 044 07	washer A 4,3		4							
5	900 143 113 07	tapping screw B 4,2 X 13	-85	4							
(5)	N 013 962 3	tapping screw B 3,9 X 16	86	8							
6	E 928 521 760 03	cover		1							
7	N 013 959 3	tapping screw B 3,5 X 16		2							
8	900 025 013 07	washer A 3,7		2							
9	900 119 030 02	pan-head screw M 8 X 20		6							
10	900 031 001 02	washer 8,4		8							
11	928 521 101 05	threaded plate		2							
		- -- E N D -- -									

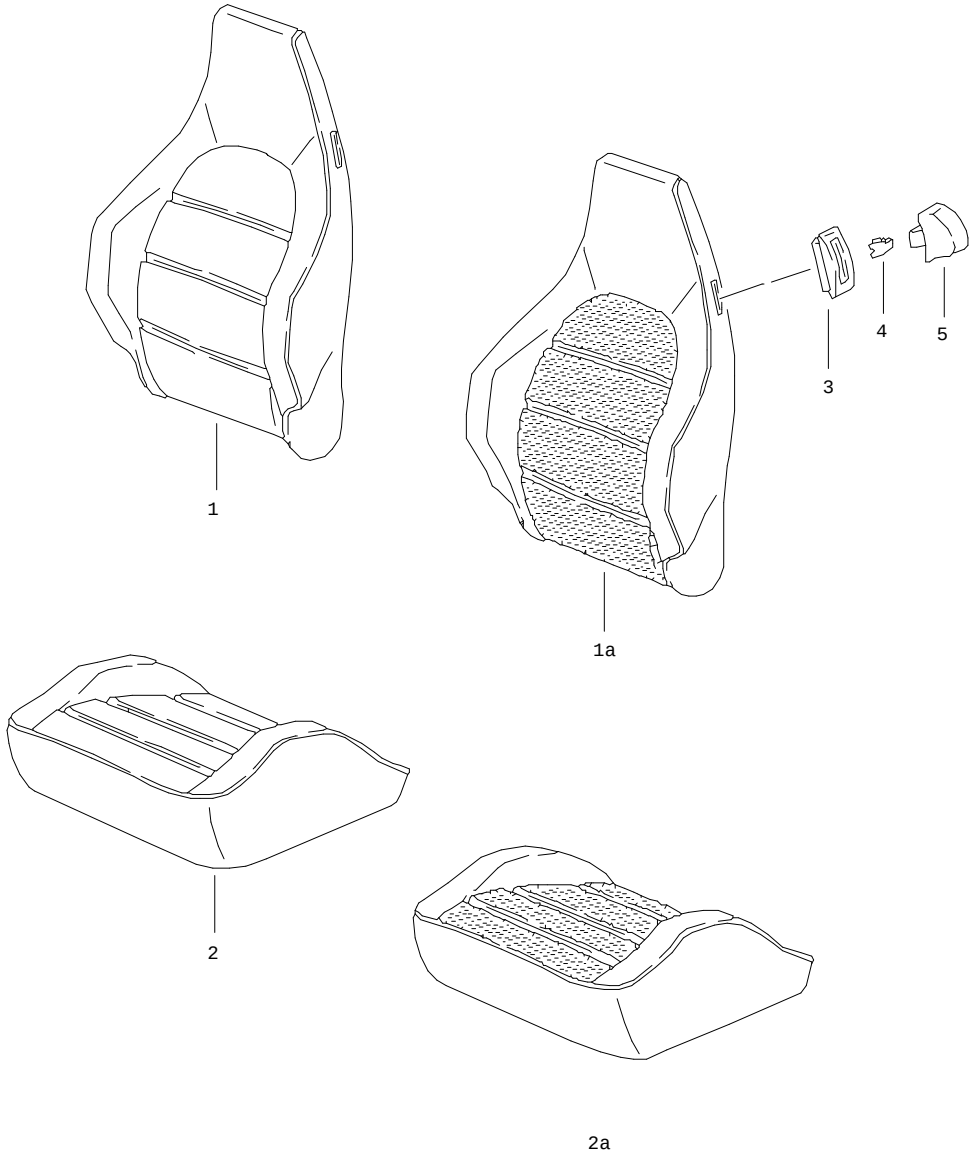

Pos	Part Number	Name	Remarks	Qty	Model
		sports seat electrically adjustable cover heating element	85-		
1	944 521 071 67	backrest cover leather		2	
	KZ2	black			
	KZ3	blue			
	KZ5	brown			
	LG7	burgundy			
	QC2	greyish green			
	LG6	dark green			
	KZ6	can-can-red			
	LG4	pearl white			
	LG5	champagne			
	PY9	ocean blue			
	PZ1	wild buffalo			
	KZ4	grey-beige	86		
1A	944 521 071 69	backrest cover leather/ centre part pin stripe velour		2	
	LS5	black/ black-white			
	LS6	brown/ brown-beige			
	LS8	blue/ blue-white			
	LS9	burgundy/ burgundy-white			
	QA7	greyish green/ greyish green-white			
	LS7	grey-beige/ grey-beige-white	86		

Pos	Part Number	Name	Remarks	Qty	Model
1A	944 521 071 69	backrest cover leather/ centre part pin stripe flannel		2	
	QB1	black/anthracite			
	QB3	brown/brown			
	QB5	blue/blue			
	QB7	burgundy/burgundy			
	QA8	greyish green/grey-green			
1A	944 521 071 69	backrest cover leather/ centre part porsche lettering cloth		2	
	QB2	black/black			
	QB4	brown/brown			
	QB6	blue/blue			
	QB8	burgundy/burgundy			
	QA9	greyish green/grey-green			
	RU1	grey-beige/grey-beige	86		
2	944 521 037 67	seat cover leather		2	
	KZ2	black			
	KZ3	blue			
	KZ5	brown			
	LG7	burgundy			
	QC2	greyish green			
	LG6	dark green			
	KZ6	can-can-red			
	LG4	pearl white			
	LG5	champagne			
	PY9	ocean blue			
	PZ1	wild buffalo			
	KZ4	grey-beige	86		
2A	944 521 037 69	seat cover leather/ centre part pin stripe velour		2	
	LS5	black/ black-white			
	LS6	brown/ brown-beige			
	LS8	blue/ blue-white			
	LS9	burgundy/ burgundy-white			
	QA7	greyish green/ greyish green-white			
	LS7	grey-beige/ grey-beige-white	86		
2A	944 521 037 69	seat cover leather/ centre part pin stripe flannel		2	
	QB1	black/anthracite			
	QB3	brown/brown			
	QB5	blue/blue			
	QB7	burgundy/burgundy			
	QA8	greyish green/grey-green			
2A	944 521 037 69	seat cover leather/ centre part porsche lettering cloth		2	
	QB2	black/black			
	QB4	brown/brown			
	QB6	blue/blue			
	QB8	burgundy/burgundy			

Pos	Part Number	Name	Remarks	Qty	Model
	QA9	greyish green/grey-green			
	RU1	grey-beige/grey-beige	86		
3	911 521 815 00	rose		4	
	01C	satin black			
4	311 881 247	clamp		4	
5	911 521 817 00	control button		4	
	01C	satin black			
-	A 928 653 104 01	heating element backrest		2	M 139/340
-	928 653 104 01	heating element backrest		2	M 139/340
-	A 928 653 102 01	heating element seat cushion		2	M 139/340
-	928 653 102 01	heating element seat cushion		2	M 139/340
		- -- E N D -- -			

Pos	Part Number	Name	Remarks	Qty	Model

Model	Year	MG	SG	Illustration	Restrictions	Update				
928	86	8	08	808-40		179	14:56	01.09.2004	PORSCHE	PET	PORSCHE

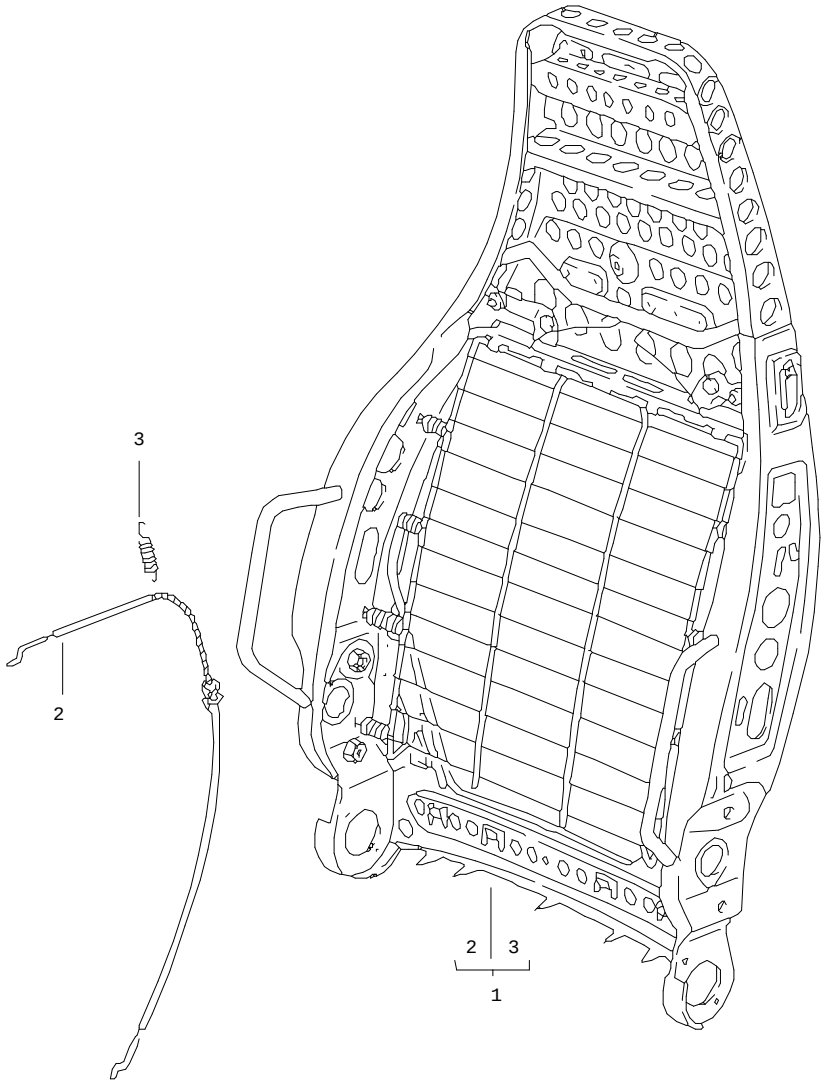

Pos	Part Number	Name	Remarks	Qty	Model
		sports seat electrically adjustable backrest frame single parts	85-		
1	A 944 521 027 01	backrest frame		1	
1	944 521 027 01	backrest frame		1	
2	928 521 093 02	bowden cable		2	
3	311 881 287 A	spring actuating lever		2	
		- -- E N D -- -			

Model	Year	MG	SG	Illustration	Restrictions	Update	14:57	01.09.2004	PORSCHE	PET	PORSCHE
928	86	8	08	808-41		179					

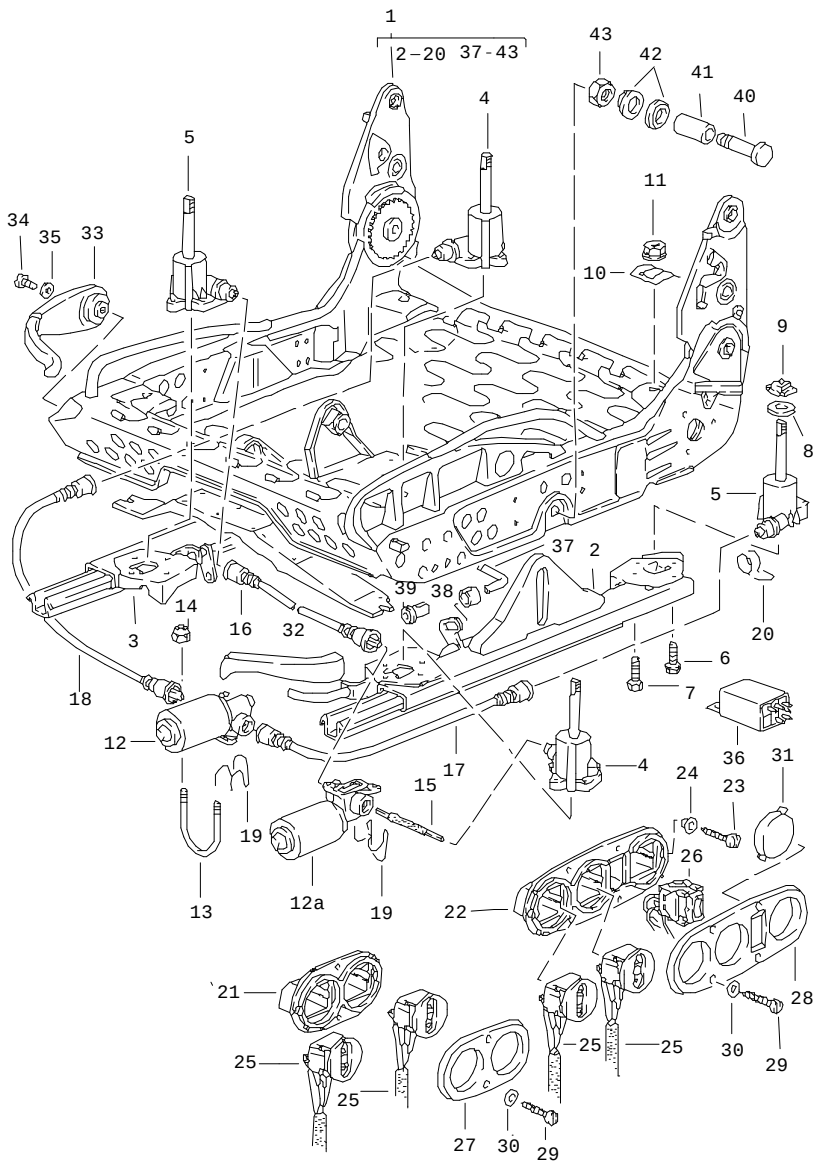

Pos	Part Number	Name	Remarks	Qty	Model
		sports seat electrically adjustable seat frame single parts	85-		
1	A 944 521 069 00	seat frame	/L	1	
1	993 521 069 02	seat frame	/L	1	
(1)	A 944 521 070 00	seat frame	/R	1	
(1)	993 521 070 02	seat frame	/R	1	
2	A 928 521 489 11	seat rail left seat outer		1	
2	928 521 489 11	seat rail left seat outer		1	
(2)	A 928 521 490 11	seat rail right seat outer		1	
(2)	928 521 490 11	seat rail right seat outer		1	
(3)	A 928 521 491 04	seat rail right seat inner		1	
(3)	964 521 491 00	seat rail right seat inner		1	
3	A 928 521 492 04	seat rail left seat inner		1	
3	964 521 492 00	seat rail left seat inner		1	
4	A 928 521 721 03	lifting gear left front, right rear		2	
4	928 521 721 03	lifting gear left front, right rear		2	
5	A 928 521 722 03	lifting gear right front, left rear		2	

Pos	Part Number	Name	Remarks	Qty	Model
5	928 521 722 03	lifting gear right front, left rear		2	
6	999 217 033 01	locking screw M 6 X 16		20	
7	900 186 032 02	pan-head screw M 6 X 12		8	
8	999 025 129 40	washer 10,2 X 30 X 1,5		8	
9	928 521 727 02	slide		8	
10	928 521 723 02	guide spring		8	
11	928 521 730 02	nut		8	
12	A 928 624 126 01	geared motor rear vertical adjustment		2	
12A	A 928 624 126 01	geared motor front vertical adjustment		2	
12	928 624 126 01	geared motor height adjustment front and rear		4	
13	999 222 001 02	stirrup bolt M 4		4	
14	900 910 006 02	lock nut M 4		8	
15	A 928 521 671 03	shaft front vertical adjustment	/L	2	
15	928 521 671 03	shaft front vertical adjustment	/L	2	
16	928 521 672 02	pliable shaft front vertical adjustment	/R	2	
17	A 928 521 673 05	flexible shaft rear vertical adjustment	/L	2	
17	928 521 673 05	shaft rear vertical adjustment	/L	2	
18	928 521 674 02	pliable shaft rear vertical adjustment	/R	2	
19	928 521 675 02	spring		4	
20	928 521 699 00	spring		6	
21	928 521 559 04	switch part		2	
22	928 521 559 02	switch part	/L	1	M 139
(22)	928 521 560 02	switch part	/R	1	M 340
23	N 013 988 1	tapping screw B 3,5 X 16		4	
24	999 591 849 07	cone washer		4	
25	928 613 181 00	switch front and rear		4	
26	928 613 187 01	switch	/L	1	M 139
(26)	928 613 188 01	switch seat heater	/R	1	M 340
27	928 521 561 04	trim for switch		2	
	01C	satin black			
28	928 521 561 03	trim for switch		2	M 139/340
	01C	satin black			
29	N 013 959 3	tapping screw B 3,5 X 16		X	
30	900 025 013 07	washer A 3,7		X	
31	928 613 425 00	cover		X	M 139/340
32	A 928 521 563 03	handle		1	M 383
(32)	A 928 521 564 03	handle		1	M 387
32	911 521 533 01	handle f.longitudinal adjustment		2	
	01C	satin black			
33	A 928 521 073 04	lever		2	
33	964 521 073 00	lever for backrest adjustment		2	
	01C	satin black			

Pos	Part Number	Name	Remarks	Qty	Model
34	900 119 011 07	pan-head screw M 5 X 10		2	
35	900 031 006 07	washer 5,3 X 9,5 X 1		2	
36	928 618 521 00	relay seat heater		2	M 139/340
37	928 521 525 03	connecting rod f.longitudinal adjustment		2	
38	N 902 514 01	clamping sleeve 4 f.longitudinal adjustment		4	
39	N 902 515 01	guide bush 4 X 6,8 X 14,5 f.longitudinal adjustment		4	
40	928 521 681 02	bolt		4	
41	928 521 685 02	bush		4	
42	928 521 683 02	washer		8	
43	900 034 003 02	hexagon nut M 10		4	
		- -- E N D -- -			

Pos	Part Number	Name	Remarks	Qty	Model

Model	Year	MG	SG	Illustration	Restrictions	Update	14:57	01.09.2004	PORSCHE	PET	PORSCHE
928	86	8	08	808-45		179					

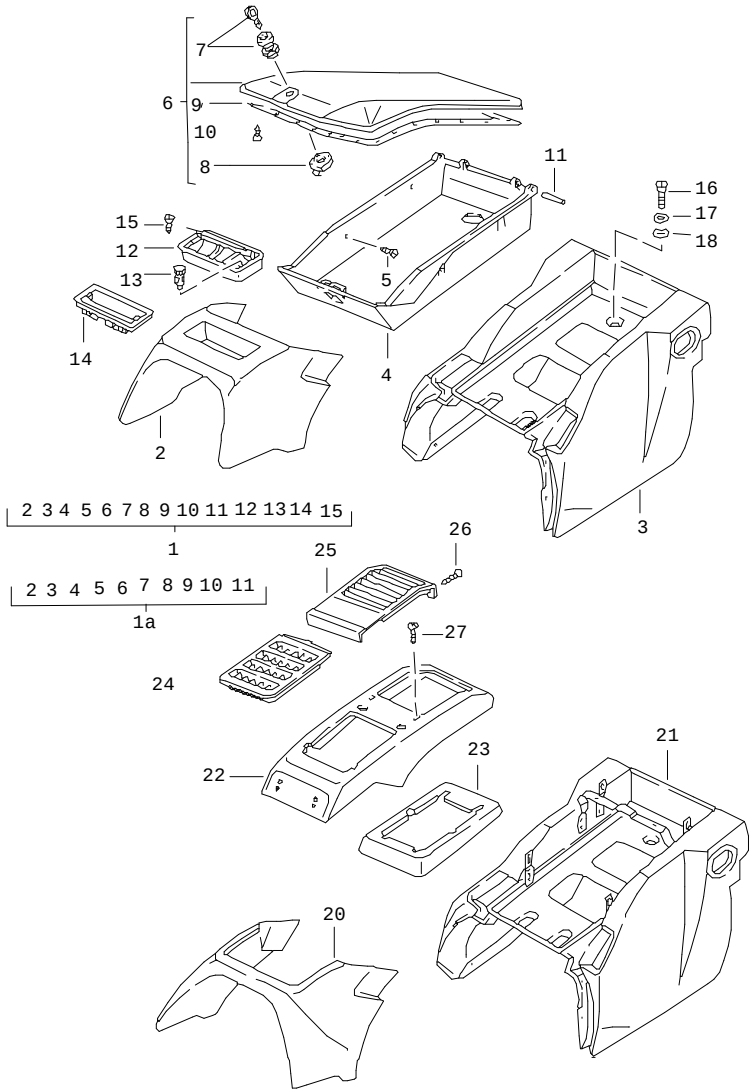

Pos	Part Number	Name	Remarks	Qty	Model
		package box rear			
1	A 928 522 065 50	package box leather	83	1	
	KZ2	black			
	4RB	brown			
	KZ3	blue			
	LG7	burgundy			
	KZ4	grey-beige			
	KZ6	can-can-red			
	LG4	pearl white			
	LG5	champagne			
	LG6	dark green			
(1)	A 928 522 065 51	package box leather	83	1	AUT.
	KZ2	black			
	4RB	brown			
	KZ3	blue			
	LG7	burgundy			
	KZ4	grey-beige			
	KZ6	can-can-red			
	LG4	pearl white			
	LG5	champagne			
	LG6	dark green			
1A	A 928 522 065 56	package box leather	84-85	1	
	KZ2	black			
	4RB	brown			
	KZ3	blue			

Pos	Part Number	Name	Remarks	Qty	Model
	LG7	burgundy			
	KZ4	grey-beige	84		
	QC2	greyish green	85		
	KZ6	can-can-red			
	LG4	pearl white			
	LG5	champagne			
	LG6	dark green			
	PY9	ocean blue	85		
	PZ1	wild buffalo	85		
(1A)	A 928 522 065 58	package box leather	86	1	
	KZ2	black			
	4RB	brown			
	KZ3	blue			
	LG7	burgundy			
	KZ4	grey-beige			
	QC2	greyish green			
	KZ6	can-can-red			
	LG4	pearl white			
	LG5	champagne			
	LG6	dark green			
	PY9	ocean blue			
	PZ1	wild buffalo			
(1A)	A 928 522 065 06	package box leatherette	84-85	1	
	05T	black			
	4RB	brown			
	1HH	blue			
	3MX	burgundy			
	5FX	grey-beige	84		
	4JX	greyish green	85		
(1A)	A 928 522 065 08	package box leatherette	86	1	
	05T	black			
	4RB	brown			
	1HH	blue			
	3MX	burgundy			
	5FX	grey-beige			
	4JX	greyish green			
2	928 522 063 50	package box front part leather	83	1	
	KZ2	black			
	4RB	brown			
	KZ3	blue			
	LG7	burgundy			
	KZ4	grey-beige			
	KZ6	can-can-red			
	LG4	pearl white			
	LG5	champagne			
	LG6	dark green			
2	928 522 063 51	package box front part leather	83	1	AUT.
	KZ2	black			
	4RB	brown			
	KZ3	blue			
	LG7	burgundy			

Pos	Part Number	Name	Remarks	Qty	Model
	KZ4	grey-beige			
	KZ6	can-can-red			
	LG4	pearl white			
	LG5	champagne			
	LG6	dark green			
(2)	928 522 063 52	package box front part leather	84	1	
	KZ2	black			
	4RB	brown			
	KZ3	blue			
	LG7	burgundy			
	KZ4	grey-beige			
	KZ6	can-can-red			
	LG4	pearl white			
	LG5	champagne			
	LG6	dark green			
(2)	928 522 063 55	package box front part leather	85-	1	
	KZ2	black			
	4RB	brown			
	KZ3	blue			
	LG7	burgundy			
	KZ4	grey-beige	86		
	QC2	greyish green			
	KZ6	can-can-red			
	LG4	pearl white			
	LG5	champagne			
	LG6	dark green			
	PY9	ocean blue			
	PZ1	wild buffalo			
(2)	928 522 063 04	package box front part leatherette	84	1	
	05T	black			
	4RB	brown			
	1HH	blue			
	3MX	burgundy			
	5FX	grey-beige			
(2)	928 522 063 07	package box front part leatherette	85-	1	
	05T	black			
	4RB	brown			
	1HH	blue			
	3MX	burgundy			
	5FX	grey-beige			
	4JX	greyish green			
3	928 522 067 50	package box leather	83	1	
	KZ2	black			
	4RB	brown			
	KZ3	blue			
	LG7	burgundy			
	KZ4	grey-beige			
	KZ6	can-can-red			
	LG4	pearl white			
	LG5	champagne			

Pos	Part Number	Name	Remarks	Qty	Model
	LG6	dark green			
(3)	928 522 067 55	package box leather	83	1	AUT.
	KZ2	black			
	4RB	brown			
	KZ3	blue			
	LG7	burgundy			
	KZ4	grey-beige			
	KZ6	can-can-red			
	LG4	pearl white			
	LG5	champagne			
	LG6	dark green			
(3)	928 522 067 55	package box leather	84-	1	
	KZ2	black			
	4RB	brown			
	KZ3	blue			
	LG7	burgundy			
	KZ4	grey-beige	84,86		
	QC2	greyish green	85-		
	KZ6	can-can-red			
	LG4	pearl white			
	LG5	champagne			
	LG6	dark green			
	PY9	ocean blue	85-		
	PZ1	wild buffalo	85-		
(3)	928 522 067 05	package box leatherette	84-	1	
	05T	black			

Pos	Part Number	Name	Remarks	Qty	Model
	4RB	brown			
	1HH	blue			
	3MX	burgundy			
	5FX	grey-beige	84,86		
	4JX	greyish green	85-		
4	928 522 279 02	insert package box		1	
	70B	black			
5	900 144 017 07	tapping screw B 2,9 X 13		6	
6	928 522 061 50	cover leather		1	
	KZ2	black			
	4RB	brown			
	KZ3	blue			
	LG7	burgundy			
	KZ4	grey-beige	84,86		
	QC2	greyish green	85-		
	KZ6	can-can-red			
	LG4	pearl white			
	LG5	champagne			
	LG6	dark green			
	PY9	ocean blue	85-		
	PZ1	wild buffalo	85-		
6	928 522 061 02	cover leatherette	84-	1	
	05T	black			
	4RB	brown			
	1HH	blue			

Pos	Part Number	Name	Remarks	Qty	Model
	3MX	burgundy			
	5FX	grey-beige	84,86		
	4JX	greyish green	85-		
7	928 522 015 02	push-button lock with keys		1	
8	928 522 069 02	catch		1	
9	928 522 269 02	cover strip		1	
10	E 900 143 066 07	screw ST 4,2 X 9,5		3	
-	999 141 010 07	countersunk-head screw 7 X 7/3,6		14	
11	900 309 010 00	roll pin 3 X 32		2	
12	928 552 060 03	ashtray	83	1	
13	928 652 103 00	cigarette lighter	83	1	
14	928 522 277 03	insert	83	1	
15	900 144 017 07	tapping screw B 2,9 X 13	83	2	
16	N 014 139 11	oval-head screw M 6 X 12		3	
17	900 089 005 02	washer 6		3	
18	N 012 226 5	spring washer B 6		3	
20	928 522 063 08	package box front part leatherette	85-	1	M 570
	05T	black			
	4RB	brown			
	1HH	blue			
	3MX	burgundy			
	5FX	grey-beige	86		
	4JX	greyish green			
20	928 522 063 56	package box front part leather	85-	1	M 570
	KZ2	black			
	4RB	brown			
	KZ3	blue			
	LG7	burgundy			
	KZ4	grey-beige	86		
	QC2	greyish green			
	KZ6	can-can-red			
	LG4	pearl white			
	LG5	champagne			
	LG6	dark green			
	PY9	ocean blue			
	PZ1	wild buffalo			
21	928 522 067 06	package box leatherette	85-	1	M 570
	05T	black			
	4RB	brown			
	1HH	blue			
	3MX	burgundy			
	4JX	greyish green			
	5FX	grey-beige	86		
21	928 522 067 56	package box leather	85-	1	M 570
	KZ2	black			
	4RB	brown			
	KZ3	blue			

Pos	Part Number	Name	Remarks	Qty	Model
	LG7	burgundy			
	QC2	greyish green			
	KZ4	grey-beige	86		
	KZ6	can-can-red			
	LG4	pearl white			
	LG5	champagne			
	LG6	dark green			
	PZ1	wild buffalo			
	PY9	ocean blue			
22	928 570 031 00	cover leatherette	85-	1	M 570
	5CT	black			
	6RT	brown			
	8HT	blue			
	1MA	burgundy			
	1JL	greyish green			
	5FX	grey-beige	86		
22	928 570 031 50	cover leather	85-	1	M 570
	KZ2	black			
	4RB	brown			
	KZ3	blue			
	LG7	burgundy			
	QC2	greyish green			
	KZ4	grey-beige	86		
	KZ6	can-can-red			
	LG4	pearl white			
	LG5	champagne			

Pos	Part Number	Name	Remarks	Qty	Model
	LG6	dark green			
	PZ1	wild buffalo			
	PY9	ocean blue			
23	A 928 570 293 01	gasket	85-	1	M 570
23	928 570 293 01	gasket		1	M 570
24	928 570 033 00	nozzle	85-	1	M 570
25	928 570 053 00	grille	85-	1	M 570
	1DB	black			
26	900 145 070 07	tapping screw ST 13 X 16	85-	2	M 570
27	999 591 716 02	tapping nut 3,0	85-	4	M 570
		- -- E N D -- -			

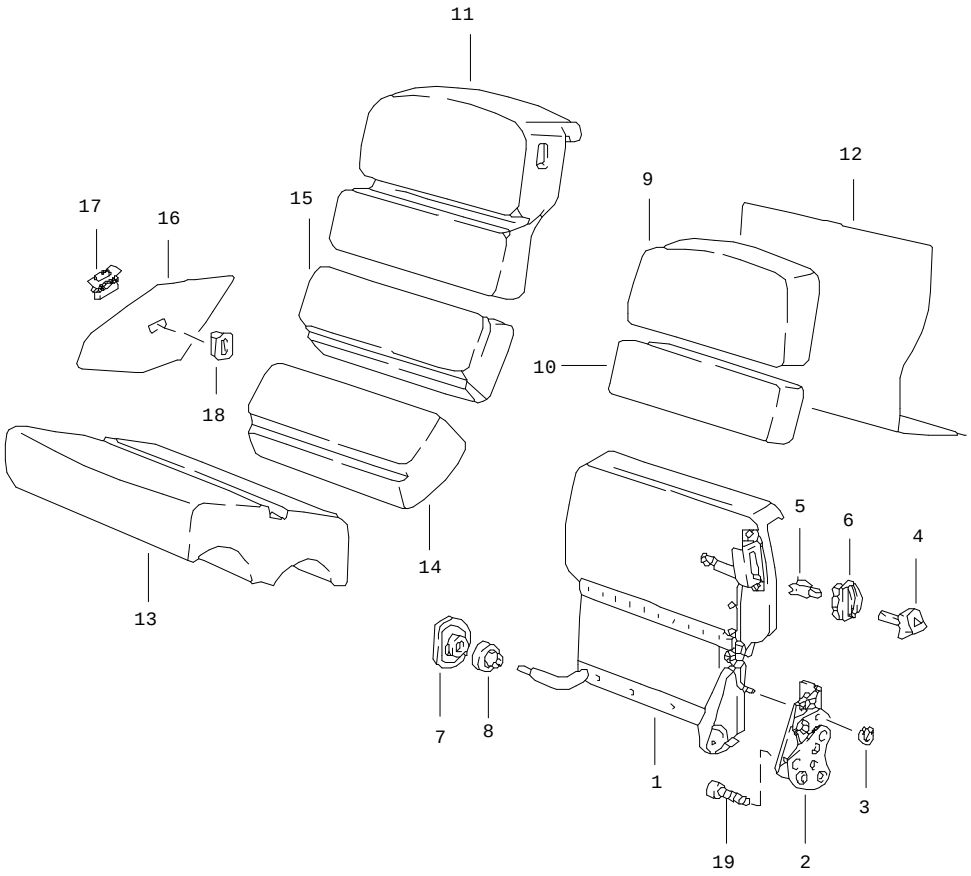

Pos	Part Number	Name	Remarks	Qty	Model
		back seat			
1	E 928 522 013 02	backrest frame	/L	1	
(1)	E 928 522 014 02	backrest frame	/R	1	
(1)	E 928 522 023 02	backrest frame	/L 85-	1	(AUS)
(1)	E 928 522 024 02	backrest frame	/R 85-	1	(AUS)
2	928 522 085 03	backrest fittings	/L	1	
(2)	928 522 086 03	backrest fittings	/R	1	
3	N 012 432 1	lock washer 2,3		4	
4	911 521 817 00	control button		2	
	01C	satin black			
5	311 881 247	clamp		2	
6	911 521 815 00	rose		2	
	01C	satin black			
7	928 522 619 02	rose for bearing backrest		2	
8	928 522 635 02	bearing sleeve		2	
9	928 522 251 02	foam part upper	/L	1	
(9)	928 522 251 03	foam part upper	/L 85-	1	(AUS)
(9)	928 522 252 02	foam part upper	/R	1	
(9)	E 928 522 252 03	foam part upper	/R 85-	1	(AUS)
10	928 522 253 02	foam part lower	/L	1	
(10)	E 928 522 253 03	foam part lower	/L 85-	1	(AUS)
(10)	928 522 254 02	foam part lower	/R	1	

Pos	Part Number	Name	Remarks	Qty	Model
(10)	928 522 254 03	foam part lower	/R 85-	1	(AUS)
(11)	928 522 037 50	back seat backrest cover leather	/L -84	1	
	KZ2	black			
	KZ5	brown			
	KZ3	blue			
	LG7	burgundy			
	KZ4	grey-beige			
	KZ6	can-can-red			
	LG4	pearl white			
	LG5	champagne			
	LG6	dark green			
(11)	928 522 038 50	back seat backrest cover leather	/R -84	1	
	KZ2	black			
	KZ5	brown			
	KZ3	blue			
	LG7	burgundy			
	KZ4	grey-beige			
	KZ6	can-can-red			
	LG4	pearl white			
	LG5	champagne			
	LG6	dark green			
(11)	928 522 037 51	back seat backrest cover leather/ checker board velour	/L -84	1	
	LH1	black/ light grey-black			
	LH2	brown/ brown-grey			
	LH3	blue/ blue-grey			
	LH4	burgundy/ burgundy-grey			
	LH5	grey-beige/ brown-grey			
(11)	928 522 038 51	back seat backrest cover leather/ checker board velour	/R -84	1	
	LH1	black/ light grey-black			
	LH2	brown/ brown-grey			
	LH3	blue/ blue-grey			
	LH4	burgundy/ burgundy-grey			
	LH5	grey-beige/ brown-grey			
(11)	928 522 037 51	back seat backrest cover leather/ uni-coloured cloth	/L -84	1	
	JN6	black/black			
	LJ1	brown/brown			
	JT4	blue/blue			
	LJ2	burgundy/burgundy			
	LJ3	grey-beige/grey-beige			
(11)	928 522 038 51	back seat backrest cover leather/ uni-coloured cloth	/R -84	1	
	JN6	black/black			
	LJ1	brown/brown			
	JT4	blue/blue			
	LJ2	burgundy/burgundy			

Pos	Part Number	Name	Remarks	Qty	Model
	LJ3	grey-beige/grey-beige			
(11)	928 522 037 51	back seat backrest cover leather/ berber cloth	/L -84 83	1	
	JH1	black/ grey/black	83		
	JH2	brown/ beige/brown	83		
	JD4	blue/ blue/black	83		
	LH8	burgundy/ burgundy-grey	83		
	LH9	grey-beige/ grey-beige-grey	83		
(11)	928 522 038 51	back seat backrest cover leather/ berber cloth	/R -84 83	1	
	JH1	black/ grey/black	83		
	JH2	brown/ beige/brown	83		
	JD4	blue/ blue/black	83		
	LH8	burgundy/ burgundy-grey	83		
	LH9	grey-beige/ grey-beige-grey	83		
(11)	928 522 037 51	back seat backrest cover leather/ pin stripe velour	/L -84	1	
	LS5	black/ black-white			
	LS6	brown/ brown-beige			
	LS8	blue/ blue-white			
	LS9	burgundy/ burgundy-white			
	LS7	grey-beige/ grey-beige-white			
(11)	928 522 038 51	back seat backrest cover leather/ pin stripe velour	/R -84	1	
	LS5	black/ black-white			
	LS6	brown/ brown-beige			
	LS8	blue/ blue-white			
	LS9	burgundy/ burgundy-white			
	LS7	grey-beige/ grey-beige-white			
(11)	928 522 037 51	back seat backrest cover leather/ porsche lettering cloth	/L -84	1	
	LR9	black/black	84		
	LS1	brown/brown	84		
	LS3	blue/blue	84		
	LS4	burgundy/burgundy	84		
	LS2	grey-beige/grey-beige	84		
(11)	928 522 038 51	back seat backrest cover leather/ porsche lettering cloth	/R -84	1	
	LR9	black/black	84		
	LS1	brown/brown	84		
	LS3	blue/blue	84		
	LS4	burgundy/burgundy	84		
	LS2	grey-beige/grey-beige	84		

Pos	Part Number	Name	Remarks	Qty	Model
(11)	928 522 037 52	back seat backrest cover leather	/L 85-	1	
	KZ2	black			
	KZ3	blue			
	KZ5	brown			
	LG7	burgundy			
	QC2	greyish green			
	KZ4	grey-beige	86		
	LG6	dark green			
	KZ6	can-can-red			
	LG4	pearl white			
	LG5	champagne			
	PY9	ocean blue			
	PZ1	wild buffalo			
(11)	928 522 038 52	back seat backrest cover leather	/R 85-	1	
	KZ2	black			
	KZ3	blue			
	KZ5	brown			
	LG7	burgundy			
	QC2	greyish green			
	KZ4	grey-beige	86		
	LG6	dark green			
	KZ6	can-can-red			
	LG4	pearl white			
	LG5	champagne			
	PY9	ocean blue			
	PZ1	wild buffalo			

Pos	Part Number	Name	Remarks	Qty	Model
(11)	928 522 037 54	back seat backrest cover leather	/L 85-	1	(AUS)
	KZ2	black			
	KZ3	blue			
	KZ5	brown			
	LG7	burgundy			
	QC2	greyish green			
	KZ4	grey-beige	86		
	LG6	dark green			
	KZ6	can-can-red			
	LG4	pearl white			
	LG5	champagne			
	PY9	ocean blue			
	PZ1	wild buffalo			
(11)	928 522 038 54	back seat backrest cover leather	/R 85-	1	(AUS)
	KZ2	black			
	KZ3	blue			
	KZ5	brown			
	LG7	burgundy			
	QC2	greyish green			
	KZ4	grey-beige	86		
	LG6	dark green			
	KZ6	can-can-red			
	LG4	pearl white			
	LG5	champagne			
	PY9	ocean blue			
	PZ1	wild buffalo			

Pos	Part Number	Name	Remarks	Qty	Model
(11)	928 522 037 53	back seat backrest cover leather/ pin stripe velour	/L 85-	1	
	LS5	black/ black-white			
	LS6	brown/ brown-beige			
	LS8	blue/ blue-white			
	LS9	burgundy/ burgundy-white			
	QA7	greyish green/ greyish green-white			
	LS7	grey-beige/ grey-beige-white	86		
(11)	928 522 038 53	back seat backrest cover leather/ pin stripe velour	/R 85-	1	
	LS5	black/ black-white			
	LS6	brown/ brown-beige			
	LS8	blue/ blue-white			
	LS9	burgundy/ burgundy-white			
	QA7	greyish green/ greyish green-white			
	LS7	grey-beige/ grey-beige-white	86		
(11)	928 522 037 55	back seat backrest cover leather/ pin stripe velour	/L 85-	1	(AUS)
	LS5	black/ black-white			
	LS6	brown/ brown-beige			
	LS8	blue/ blue-white			
	LS9	burgundy/ burgundy-white			
	QA7	greyish green/ greyish green-white			
	LS7	grey-beige/ grey-beige-white	86		
(11)	928 522 038 55	back seat backrest cover leather/ pin stripe velour	/R 85-	1	(AUS)
	LS5	black/ black-white			
	LS6	brown/ brown-beige			
	LS8	blue/ blue-white			
	LS9	burgundy/ burgundy-white			
	QA7	greyish green/ greyish green-white			
	LS7	grey-beige/ grey-beige-white	86		
(11)	928 522 037 53	back seat backrest cover leather/ pin stripe flannel	/L 85-	1	
	QB1	black/anthracite			
	QB3	brown/brown			
	QB5	blue/blue			
	QB7	burgundy/burgundy			
	QA8	greyish green/grey-green			
(11)	928 522 038 53	back seat backrest cover leather/ pin stripe flannel	/R 85-	1	
	QB1	black/anthracite			

Pos	Part Number	Name	Remarks	Qty	Model
	QB3	brown/brown			
	QB5	blue/blue			
	QB7	burgundy/burgundy			
	QA8	greyish green/grey-green			
(11)	928 522 037 55	back seat backrest cover leather/ pin stripe flannel	/L 85-	1	(AUS)
	QB1	black/anthracite			
	QB3	brown/brown			
	QB5	blue/blue			
	QB7	burgundy/burgundy			
	QA8	greyish green/grey-green			
(11)	928 522 038 55	back seat backrest cover leather/ pin stripe flannel	/R 85-	1	(AUS)
	QB1	black/anthracite			
	QB3	brown/brown			
	QB5	blue/blue			
	QB7	burgundy/burgundy			
	QA8	greyish green/grey-green			
(11)	928 522 037 53	back seat backrest cover leather/ porsche lettering cloth	/L 85-	1	
	QB2	black/black			
	QB4	brown/brown			
	QB6	blue/blue			
	QB8	burgundy/burgundy			
	QA9	greyish green/grey-green			
	RU1	grey-beige/grey-beige	86		

Pos	Part Number	Name	Remarks	Qty	Model
(11)	928 522 038 53	back seat backrest cover leather/ porsche lettering cloth	/R 85-	1	
	QB2	black/black			
	QB4	brown/brown			
	QB6	blue/blue			
	QB8	burgundy/burgundy			
	QA9	greyish green/grey-green			
	RU1	grey-beige/grey-beige	86		
(11)	928 522 037 55	back seat backrest cover leather/ porsche lettering cloth	/L 85-	1	(AUS)
	QB2	black/black			
	QB4	brown/brown			
	QB6	blue/blue			
	QB8	burgundy/burgundy			
	QA9	greyish green/grey-green			
	RU1	grey-beige/grey-beige	86		
(11)	928 522 038 55	back seat backrest cover leather/ porsche lettering cloth	/R 85-	1	(AUS)
	QB2	black/black			
	QB4	brown/brown			
	QB6	blue/blue			
	QB8	burgundy/burgundy			
	QA9	greyish green/grey-green			
	RU1	grey-beige/grey-beige	86		
12	928 522 051 03	carpet for back seat backrest	/L	1	
	2FL	grey-beige	-84,86		

Pos	Part Number	Name	Remarks	Qty	Model
	70E	black			
	40E	brown			
	30B	blue			
	80E	burgundy			
	8JK	greyish green	85-		
	60A	grey			
	6JD	dark green			
	80S	can-can-red			
	1VD	champagne			
	2YN	white	85-		
(12)	928 522 052 03	carpet for back seat backrest	/R	1	
	2FL	grey-beige	-84,86		
	70E	black			
	40E	brown			
	30B	blue			
	80E	burgundy			
	8JK	greyish green	85-		
	60A	grey			
	6JD	dark green			
	80S	can-can-red			
	1VD	champagne			
	2YN	white	85-		
(12)	928 522 051 04	carpet for back seat backrest	/L 85-	1	(AUS)
	70E	black			
	40E	brown			

Pos	Part Number	Name	Remarks	Qty	Model
	30B	blue			
	80E	burgundy			
	8JK	greyish green			
	60A	grey			
	2FL	grey-beige	86		
	6JD	dark green			
	80S	can-can-red			
	1VD	champagne			
	2YN	white			
(12)	928 522 052 04	carpet for back seat backrest	/R 85-	1	(AUS)
	70E	black			
	40E	brown			
	30B	blue			
	80E	burgundy			
	8JK	greyish green			
	60A	grey			
	2FL	grey-beige	86		
	6JD	dark green			
	80S	can-can-red			
	1VD	champagne			
	2YN	white			
(13)	928 522 059 04	seat cushion front checker board velour	/L	1	
	4FH	light grey-black	-84		
	5RH	brown-grey	-84		
	7GH	blue-grey	-84		

Pos	Part Number	Name	Remarks	Qty	Model
	9LH	burgundy-grey	-84		
13	928 522 060 05	seat cushion front checker board velour	/R	1	
	4FH	light grey-black	-84		
	5RH	brown-grey	-84		
	7GH	blue-grey	-84		
	9LH	burgundy-grey	-84		
(13)	928 522 059 04	seat cushion front uni-coloured cloth	/L	1	
	70F	black	-84		
	7NU	brown	-84		
	30C	blue	-84		
	5MU	burgundy	-84		
	8FU	grey-beige	-84		
13	928 522 060 05	seat cushion front uni-coloured cloth	/R	1	
	70F	black	-84		
	7NU	brown	-84		
	30C	blue	-84		
	5MU	burgundy	-84		
	8FU	grey-beige	-84		
(13)	928 522 059 04	seat cushion front berber cloth	/L 83	1	
	1GB	grey/black	83		
	8NB	beige/brown	83		
	37B	blue/black	83		
	6LB	burgundy-grey	83		
	1FB	grey-beige-grey	83		
13	928 522 060 05	seat cushion front berber cloth	/R 83	1	
	1GB	grey/black	83		
	8NB	beige/brown	83		
	37B	blue/black	83		
	6LB	burgundy-grey	83		
	1FB	grey-beige-grey	83		
(13)	928 522 059 04	seat cushion front pin stripe velour	/L	1	
	7BN	black-white			
	3NN	brown-beige			
	8GJ	blue-white			
	1MJ	burgundy-white			
	9FN	grey-beige-white	-84,86		
	3JV	greyish green-white	85-		
13	928 522 060 05	seat cushion front pin stripe velour	/R	1	
	7BN	black-white			
	3NN	brown-beige			
	8GJ	blue-white			
	1MJ	burgundy-white			
	9FN	grey-beige-white	-84,86		
	3JV	greyish green-white	85-		
(13)	928 522 059 04	seat cushion front porsche lettering cloth	/L	1	
	4CR	black	84		

Pos	Part Number	Name	Remarks	Qty	Model
	6TR	brown	84		
	5HR	blue	84		
	2LR	burgundy	84		
	8RR	grey-beige	84		
	2CZ	black	85-		
	7NZ	brown	85-		
	6HZ	blue	85-		
	5LZ	burgundy	85-		
	1JK	greyish green	85-		
	5UY	grey-beige	86		
13	928 522 060 05	seat cushion front porsche lettering cloth	/R	1	
	4CR	black	84		
	6TR	brown	84		
	5HR	blue	84		
	2LR	burgundy	84		
	8RR	grey-beige	84		
	2CZ	black	85-		
	7NZ	brown	85-		
	6HZ	blue	85-		
	5LZ	burgundy	85-		
	1JK	greyish green	85-		
	5UY	grey-beige	86		
(13)	928 522 059 04	seat cushion front pin stripe flannel	/L	1	
	8BF	anthracite	85-		
	2TF	brown	85-		
	6GF	blue	85-		
	1MF	burgundy	85-		
	9JF	greyish green	85-		
13	928 522 060 05	seat cushion front pin stripe flannel	/R	1	
	8BF	anthracite	85-		
	2TF	brown	85-		
	6GF	blue	85-		
	1MF	burgundy	85-		
	9JF	greyish green	85-		
(13)	928 522 059 51	seat cushion front leather	/L	1	
	KZ2	black			
	KZ5	brown			
	KZ3	blue			
	LG7	burgundy			
	KZ4	grey-beige	-84,86		
	KZ6	can-can-red			
	LG4	pearl white			
	LG5	champagne			
	LG6	dark green			
	QC2	greyish green	85-		
	PY9	ocean blue	85-		
	PZ1	wild buffalo	85-		
13	928 522 060 52	seat cushion front leather	/R	1	
	KZ2	black			

Pos	Part Number	Name	Remarks	Qty	Model
	KZ5	brown			
	KZ3	blue			
	LG7	burgundy			
	KZ4	grey-beige	-84,86		
	KZ6	can-can-red			
	LG4	pearl white			
	LG5	champagne			
	LG6	dark green			
	QC2	greyish green	85-		
	PY9	ocean blue	85-		
	PZ1	wild buffalo	85-		
(14)	928 522 087 04	seat cushion centre checker board velour	/L	1	
	4FH	light grey-black	-84		
	5RH	brown-grey	-84		
	7GH	blue-grey	-84		
	9LH	burgundy-grey	-84		
14	928 522 088 04	seat cushion centre checker board velour	/R	1	
	4FH	light grey-black	-84		
	5RH	brown-grey	-84		
	7GH	blue-grey	-84		
	9LH	burgundy-grey	-84		
(14)	928 522 087 04	seat cushion centre uni-coloured cloth	/L	1	
	70F	black	-84		
	7NU	brown	-84		
	30C	blue	-84		
	5MU	burgundy	-84		
	8FU	grey-beige	-84		
14	928 522 088 04	seat cushion centre uni-coloured cloth	/R	1	
	70F	black	-84		
	7NU	brown	-84		
	30C	blue	-84		
	5MU	burgundy	-84		
	8FU	grey-beige	-84		
(14)	928 522 087 04	seat cushion centre berber cloth	/L 83	1	
	1GB	grey/black	83		
	8NB	beige/brown	83		
	37B	blue/black	83		
	6LB	burgundy-grey	83		
	1FB	grey-beige-grey	83		
14	928 522 088 04	seat cushion centre berber cloth	/R 83	1	
	1GB	grey/black	83		
	8NB	beige/brown	83		
	37B	blue/black	83		
	6LB	burgundy-grey	83		
	1FB	grey-beige-grey	83		
(14)	928 522 087 04	seat cushion centre pin stripe velour	/L	1	
	7BN	black-white			

Pos	Part Number	Name	Remarks	Qty	Model
	3NN	brown-beige			
	8GJ	blue-white			
	1MJ	burgundy-white			
	9FN	grey-beige-white	-84,86		
	3JV	greyish green-white	85-		
14	928 522 088 04	seat cushion centre pin stripe velour	/R	1	
	7BN	black-white			
	3NN	brown-beige			
	8GJ	blue-white			
	1MJ	burgundy-white			
	9FN	grey-beige-white	-84,86		
	3JV	greyish green-white	85-		
(14)	928 522 087 04	seat cushion centre porsche lettering cloth	/L	1	
	4CR	black	84		
	6TR	brown	84		
	5HR	blue	84		
	2LR	burgundy	84		
	8RR	grey-beige	84		
	2CZ	black	85-		
	7NZ	brown	85-		
	6HZ	blue	85-		
	5LZ	burgundy	85-		
	1JK	greyish green	85-		
	5UY	grey-beige	86		

Pos	Part Number	Name	Remarks	Qty	Model
14	928 522 088 04	seat cushion centre porsche lettering cloth	/R	1	
	4CR	black	84		
	6TR	brown	84		
	5HR	blue	84		
	2LR	burgundy	84		
	8RR	grey-beige	84		
	2CZ	black	85-		
	7NZ	brown	85-		
	6HZ	blue	85-		
	5LZ	burgundy	85-		
	1JK	greyish green	85-		
	5UY	grey-beige	86		
(14)	928 522 087 04	seat cushion centre pin stripe flannel	/L	1	
	8BF	anthracite	85-		
	2TF	brown	85-		
	6GF	blue	85-		
	1MF	burgundy	85-		
	9JF	greyish green	85-		
14	928 522 088 04	seat cushion centre pin stripe flannel	/R	1	
	8BF	anthracite	85-		
	2TF	brown	85-		
	6GF	blue	85-		
	1MF	burgundy	85-		
	9JF	greyish green	85-		

Pos	Part Number	Name	Remarks	Qty	Model
(14)	928 522 087 51	seat cushion centre leather		1	
	KZ2	black			
	KZ5	brown			
	KZ3	blue			
	LG7	burgundy			
	KZ4	grey-beige	-84,86		
	KZ6	can-can-red			
	LG4	pearl white			
	LG5	champagne			
	LG6	dark green			
	QC2	greyish green	85-		
	PY9	ocean blue	85-		
	PZ1	wild buffalo	85-		
14	928 522 088 51	seat cushion centre leather		1	
	KZ2	black			
	KZ5	brown			
	KZ3	blue			
	LG7	burgundy			
	KZ4	grey-beige	-84,86		
	KZ6	can-can-red			
	LG4	pearl white			
	LG5	champagne			
	LG6	dark green			
	QC2	greyish green	85-		
	PY9	ocean blue	85-		

Pos	Part Number	Name	Remarks	Qty	Model
	PZ1	wild buffalo	85-		
(15)	928 522 045 03	seat cushion upper checker board velour	/L	1	
	4FH	light grey-black	-84		
	5RH	brown-grey	-84		
	7GH	blue-grey	-84		
	9LH	burgundy-grey	-84		
15	928 522 046 03	seat cushion upper checker board velour	/R	1	
	4FH	light grey-black	-84		
	5RH	brown-grey	-84		
	7GH	blue-grey	-84		
	9LH	burgundy-grey	-84		
(15)	928 522 045 03	seat cushion upper uni-coloured cloth	/L	1	
	70F	black	-84		
	7NU	brown	-84		
	30C	blue	-84		
	5MU	burgundy	-84		
	8FU	grey-beige	-84		
15	928 522 046 03	seat cushion upper uni-coloured cloth	/R	1	
	70F	black	-84		
	7NU	brown	-84		
	30C	blue	-84		
	5MU	burgundy	-84		
	8FU	grey-beige	-84		

Pos	Part Number	Name	Remarks	Qty	Model
(15)	928 522 045 03	seat cushion upper berber cloth	/L 83	1	
	1GB	grey/black	83		
	8NB	beige/brown	83		
	37B	blue/black	83		
	6LB	burgundy-grey	83		
	1FB	grey-beige-grey	83		
15	928 522 046 03	seat cushion upper berber cloth	/R 83	1	
	1GB	grey/black	83		
	8NB	beige/brown	83		
	37B	blue/black	83		
	6LB	burgundy-grey	83		
	1FB	grey-beige-grey	83		
(15)	928 522 045 03	seat cushion upper pin stripe velour	/L	1	
	7BN	black-white			
	3NN	brown-beige			
	8GJ	blue-white			
	1MJ	burgundy-white			
	9FN	grey-beige-white	-84		
	3JV	greyish green-white	85-		
15	928 522 046 03	seat cushion upper pin stripe velour	/R	1	
	7BN	black-white			
	3NN	brown-beige			
	8GJ	blue-white			
	1MJ	burgundy-white			
	9FN	grey-beige-white	-84		
	3JV	greyish green-white	85-		
(15)	928 522 045 03	seat cushion upper porsche lettering cloth	/L	1	
	4CR	black	84		
	6TR	brown	84		
	5HR	blue	84		
	2LR	burgundy	84		
	8RR	grey-beige	84		
	2CZ	black	85-		
	7NZ	brown	85-		
	6HZ	blue	85-		
	5LZ	burgundy	85-		
	1JK	greyish green	85-		
	5UY	grey-beige	86		
15	928 522 046 03	seat cushion upper porsche lettering cloth	/R	1	
	4CR	black	84		
	6TR	brown	84		
	5HR	blue	84		
	2LR	burgundy	84		
	8RR	grey-beige	84		
	2CZ	black	85-		
	7NZ	brown	85-		
	6HZ	blue	85-		
	5LZ	burgundy	85-		

Pos	Part Number	Name	Remarks	Qty	Model
	1JK	greyish green	85-		
	5UY	grey-beige	86		
(15)	928 522 045 03	seat cushion upper pin stripe flannel	/L	1	
	8BF	anthracite	85-		
	2TF	brown	85-		
	6GF	blue	85-		
	1MF	burgundy	85-		
	9JF	greyish green	85-		
15	928 522 046 03	seat cushion upper pin stripe flannel	/R	1	
	8BF	anthracite	85-		
	2TF	brown	85-		
	6GF	blue	85-		
	1MF	burgundy	85-		
	9JF	greyish green	85-		
(15)	928 522 045 50	seat cushion upper leather	/L	1	
	KZ2	black			
	KZ5	brown			
	KZ3	blue			
	LG7	burgundy			
	KZ4	grey-beige	-84		
	KZ6	can-can-red			
	LG4	pearl white			
	LG5	champagne			
	LG6	dark green			
	QC2	greyish green	85		
	PY9	ocean blue	85		
	PZ1	wild buffalo	85		
15	928 522 046 50	seat cushion upper leather	/R	1	
	KZ2	black			
	KZ5	brown			
	KZ3	blue			
	LG7	burgundy			
	KZ4	grey-beige	-84		
	KZ6	can-can-red			
	LG4	pearl white			
	LG5	champagne			
	LG6	dark green			
	QC2	greyish green	85		
	PY9	ocean blue	85		
	PZ1	wild buffalo	85		
(16)	928 522 041 04	seat well outer leatherette	/L	1	
	05T	black			
	4RB	brown			
	1HH	blue			
	3MX	burgundy			
	5FX	grey-beige	-84		
	4JX	greyish green	85		
16	928 522 042 04	seat well outer leatherette	/R	1	

Pos	Part Number	Name	Remarks	Qty	Model
	05T	black			
	4RB	brown			
	1HH	blue			
	3MX	burgundy			
	5FX	grey-beige	-84		
	4JX	greyish green	85		
(16)	928 522 041 52	seat well outer leather	/L	1	
	KZ2	black			
	KZ5	brown			
	KZ3	blue			
	LG7	burgundy			
	KZ4	grey-beige	-84,86		
	KZ6	can-can-red			
	LG4	pearl white			
	LG5	champagne			
	LG6	dark green			
	QC2	greyish green	85		
	PY9	ocean blue	85		
	PZ1	wild buffalo	85		
16	928 522 042 52	seat well outer leather	/R	1	
	KZ2	black			
	KZ5	brown			
	KZ3	blue			
	LG7	burgundy			
	KZ4	grey-beige	-84,86		
	KZ6	can-can-red			
	LG4	pearl white			
	LG5	champagne			
	LG6	dark green			
	QC2	greyish green	85		
	PY9	ocean blue	85		
	PZ1	wild buffalo	85		
17	928 522 321 02	bag		2	
	70B	black			
18	928 522 415 03	rose		2	
	70B	satin black			
19	900 119 057 02	pan-head screw M 8 X 20		4	

- -- E N D -- -

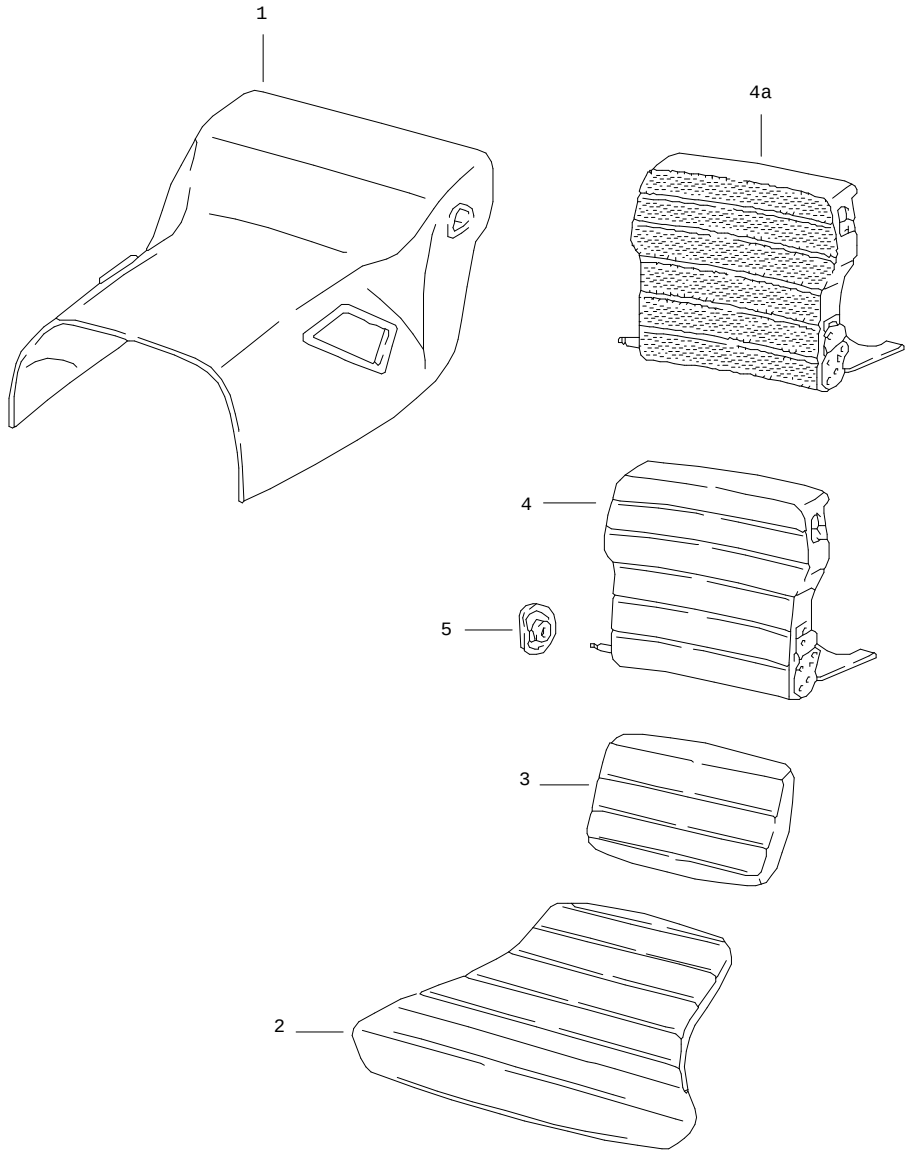

Pos	Part Number	Name	Remarks	Qty	Model
		back seat lining tunnel without package box	-84		
1	A 928 522 345 30	lining tunnel leatherette	83	1	
	05T	black			
	4RB	brown			
	1HH	blue			
	3MX	burgundy			
	5FX	grey-beige			
1	A 928 522 345 31	lining tunnel leatherette	83	1	AUT.
	05T	black			
	4RB	brown			
	1HH	blue			
	3MX	burgundy			
	5FX	grey-beige			
1	A 928 522 345 31	lining tunnel leatherette	84	1	
	05T	black			
	4RB	brown			
	1HH	blue			
	3MX	burgundy			
	5FX	grey-beige			
1	A 928 522 345 50	lining tunnel leather	83	1	
	KZ2	black			

Pos	Part Number	Name	Remarks	Qty	Model
	KZ3	blue			
	4RB	brown			
	LG7	burgundy			
	KZ4	grey-beige			
	KZ6	can-can-red			
	LG4	pearl white			
	LG5	champagne			
	LG6	dark green			
1	A 928 522 345 51	lining tunnel leather	83	1	AUT.
	KZ2	black			
	KZ3	blue			
	4RB	brown			
	LG7	burgundy			
	KZ4	grey-beige			
	KZ6	can-can-red			
	LG4	pearl white			
	LG5	champagne			
	LG6	dark green			
1	A 928 522 345 51	lining tunnel leather	84	1	
	KZ2	black			
	KZ3	blue			
	4RB	brown			
	LG7	burgundy			
	KZ4	grey-beige			
	KZ6	can-can-red			
	LG4	pearl white			
	LG5	champagne			
	LG6	dark green			
2	928 522 059 60	seat cushion front leather	/L	1	M 409
	KZ2	black			
	KZ3	blue			
	KZ5	brown			
	LG7	burgundy			
	KZ4	grey-beige			
	KZ6	can-can-red			
	LG4	pearl white			
	LG5	champagne			
	LG6	dark green			
2	928 522 060 60	seat cushion front leather	/R	1	M 409
	KZ2	black			
	KZ3	blue			
	KZ5	brown			
	LG7	burgundy			
	KZ4	grey-beige			
	KZ6	can-can-red			
	LG4	pearl white			
	LG5	champagne			
	LG6	dark green			
2	928 522 059 30	seat cushion front checker board velour	/L	1	M 409

Pos	Part Number	Name	Remarks	Qty	Model
	4FH	light grey-black			
	5RH	brown-grey			
	7GH	blue-grey			
	9LH	burgundy-grey			
2	928 522 060 30	seat cushion front checker board velour	/R	1	M 409
	4FH	light grey-black			
	5RH	brown-grey			
	7GH	blue-grey			
	9LH	burgundy-grey			
2	928 522 059 30	seat cushion uni-coloured cloth	/L	1	M 409
	70F	black			
	7NU	brown			
	30C	blue			
	5MU	burgundy			
	8FU	grey-beige			
2	928 522 060 30	seat cushion uni-coloured cloth	/R	1	M 409
	70F	black			
	7NU	brown			
	30C	blue			
	5MU	burgundy			
	8FU	grey-beige			
2	928 522 059 30	seat cushion pin stripe velour	/L	1	M 409
	4BN	black-white			
	3NN	brown-beige			
	8GJ	blue-white			
	1MJ	burgundy-white			
	9FN	grey-beige-white			
2	928 522 060 30	seat cushion pin stripe velour	/R	1	M 409
	4BN	black-white			
	3NN	brown-beige			
	8GJ	blue-white			
	1MJ	burgundy-white			
	9FN	grey-beige-white			
2	928 522 059 30	seat cushion porsche lettering cloth	/L	1	M 409
	4CR	black	84		
	6TR	brown	84		
	5HR	blue	84		
	2LR	burgundy	84		
	8RR	grey-beige	84		
2	928 522 060 30	seat cushion porsche lettering cloth	/R	1	M 409
	4CR	black	84		
	6TR	brown	84		
	5HR	blue	84		
	2LR	burgundy	84		
	8RR	grey-beige	84		
3	928 522 045 60	seat cushion upper leather	/L	1	M 409
	KZ2	black			
	KZ3	blue			
	KZ5	brown			
	LG7	burgundy			

Pos	Part Number	Name	Remarks	Qty	Model
	KZ4	grey-beige			
	KZ6	can-can-red			
	LG4	pearl white			
	LG5	champagne			
	LG6	dark green			
3	928 522 046 60	seat cushion upper leather	/R	1	M 409
	KZ2	black			
	KZ3	blue			
	KZ5	brown			
	LG7	burgundy			
	KZ4	grey-beige			
	KZ6	can-can-red			
	LG4	pearl white			
	LG5	champagne			
	LG6	dark green			
3	928 522 045 30	seat cushion upper checker board velour	/L	1	M 409
	4FH	light grey-black			
	5RH	brown-grey			
	7GH	blue-grey			
	9LH	burgundy-grey			
3	928 522 046 30	seat cushion upper checker board velour	/R	1	M 409
	4FH	light grey-black			
	5RH	brown-grey			
	7GH	blue-grey			
	9LH	burgundy-grey			
3	928 522 045 30	seat cushion uni-coloured cloth	/L	1	M 409
	70F	black			
	7NU	brown			
	30C	blue			
	5MU	burgundy			
	8FU	grey-beige			
3	928 522 046 30	seat cushion uni-coloured cloth	/R	1	M 409
	70F	black			
	7NU	brown			
	30C	blue			
	5MU	burgundy			
	8FU	grey-beige			
3	928 522 045 30	seat cushion pin stripe velour	/L	1	M 409
	4BN	black-white			
	3NN	brown-beige			
	8GJ	blue-white			
	1MJ	burgundy-white			
	9FN	grey-beige-white			
3	928 522 046 30	seat cushion pin stripe velour	/R	1	M 409
	4BN	black-white			
	3NN	brown-beige			
	8GJ	blue-white			
	1MJ	burgundy-white			
	9FN	grey-beige-white			

Pos	Part Number	Name	Remarks	Qty	Model
3	928 522 045 30	seat cushion porsche lettering cloth	/L	1	M 409
	4CR	black	84		
	6TR	brown	84		
	5HR	blue	84		
	2LR	burgundy	84		
	8RR	grey-beige	84		
3	928 522 046 30	seat cushion porsche lettering cloth	/R	1	M 409
	4CR	black	84		
	6TR	brown	84		
	5HR	blue	84		
	2LR	burgundy	84		
	8RR	grey-beige	84		
4	928 522 005 60	back seat backrest leather/carpet	/L	1	M 409
	KZ2	black/ black			
	LG9	black/ light grey			
	KZ5	brown/ brown			
	KZ3	blue/ blue			
	LG7	burgundy/ burgundy			
	KZ4	grey-beige/ grey-beige			
	KZ6	can-can-red/ can-can-red			
	LG8	can-can-red/ black			
	LJ7	pearl white/ black			
	LL7	pearl white/ blue			
	LL8	pearl white/ burgundy			
	LG5	champagner/ champagne			
	LL9	champagner/ black			
	LM1	champagner/ brown			
	LM2	champagner/ blue			
	LG6	dark green/ dark green			
4	928 522 006 60	back seat backrest leather/carpet	/R	1	M 409
	KZ2	black/ black			
	LG9	black/ light grey			
	KZ5	brown/ brown			
	KZ3	blue/ blue			
	LG7	burgundy/ burgundy			
	KZ4	grey-beige/ grey-beige			
	KZ6	can-can-red/ can-can-red			
	LG8	can-can-red/ black			
	LJ7	pearl white/ black			

Pos	Part Number	Name	Remarks	Qty	Model
	LL7	pearl white/ blue			
	LL8	pearl white/ burgundy			
	LG5	champagner/ champagne			
	LL9	champagner/ black			
	LM1	champagner/ brown			
	LM2	champagner/ blue			
	LG6	dark green/ dark green			
4A	928 522 005 61	back seat backrest leather/ backrest surface checker board velour carpet	/L	1	M 409
	LH1	black/ light grey-black black			
	LH7	black/ light grey-black grey			
	LH2	brown/ brown-grey brown			
	LH3	blue/ blue-grey blue			
	LH4	burgundy/ burgundy-grey burgundy			
	LH5	grey-beige/ brown-grey grey-beige			
(4A)	928 522 006 61	back seat backrest leather/ backrest surface checker board velour carpet	/R	1	M 409
	LH1	black/ light grey-black black			
	LH7	black/ light grey-black grey			
	LH2	brown/ brown-grey brown			
	LH3	blue/ blue-grey blue			
	LH4	burgundy/ burgundy-grey burgundy			
	LH5	grey-beige/ brown-grey grey-beige			
4A	928 522 005 61	back seat backrest leather/ backrest surface uni-coloured cloth carpet	/L	1	M 409
	JN6	black/black black			
	LJ4	black/black grey			
	LJ1	brown/brown brown			
	JT4	blue/blue blue			
	LJ2	burgundy/burgundy burgundy			
	LJ3	grey-beige/grey-beige grey-beige			

Pos	Part Number	Name	Remarks	Qty	Model
(4A)	928 522 006 61	back seat backrest leather/ backrest surface uni-coloured cloth carpet	/R	1	M 409
	JN6	black/black black			
	LJ4	black/black grey			
	LJ1	brown/brown brown			
	JT4	blue/blue blue			
	LJ2	burgundy/burgundy burgundy			
	LJ3	grey-beige/grey-beige grey-beige			
4A	928 522 005 61	back seat backrest leather/ backrest surface pin stripe velour carpet	/L	1	M 409
	LS5	black/ black-white black			
	MZ8	black/ black-white grey			
	LS6	brown/ brown-beige brown			
	LS8	blue/ blue-white blue			
	LS9	burgundy/ burgundy-white burgundy			
	LS7	grey-beige/ grey-beige-white grey-beige			

Pos	Part Number	Name	Remarks	Qty	Model
(4A)	928 522 006 61	back seat backrest leather/ backrest surface pin stripe velour carpet	/R	1	M 409
	LS5	black/ black-white black			
	MZ8	black/ black-white grey			
	LS6	brown/ brown-beige brown			
	LS8	blue/ blue-white blue			
	LS9	burgundy/ burgundy-white burgundy			
	LS7	grey-beige/ grey-beige-white grey-beige			
4A	928 522 005 61	back seat backrest leather/ backrest surface porsche lettering cloth carpet	/L	1	M 409
	LR9	black/black black	84		
	MZ9	black/black grey	84		
	LS1	brown/brown brown	84		
	LS3	blue/blue blue	84		
	LS4	burgundy/burgundy burgundy	84		
	LS2	grey-beige/grey-beige grey-beige	84		

Pos	Part Number	Name	Remarks	Qty	Model
(4A)	928 522 006 61	back seat backrest leather/ backrest surface porsche lettering cloth carpet	/R	1	M 409
	LR9	black/black black	84		
	MZ9	black/black grey	84		
	LS1	brown/brown brown	84		
	LS3	blue/blue blue	84		
	LS4	burgundy/burgundy burgundy	84		
	LS2	grey-beige/grey-beige grey-beige	84		
5	928 522 619 30	rose	-84	2	
		- -- E N D -- -			

Pos	Part Number	Name	Remarks	Qty	Model

Model	Year	MG	SG	Illustration	Restrictions	Update	14:58	01.09.2004	PORSCHE	PET	PORSCHE
928	86	8	09	809-00		179					

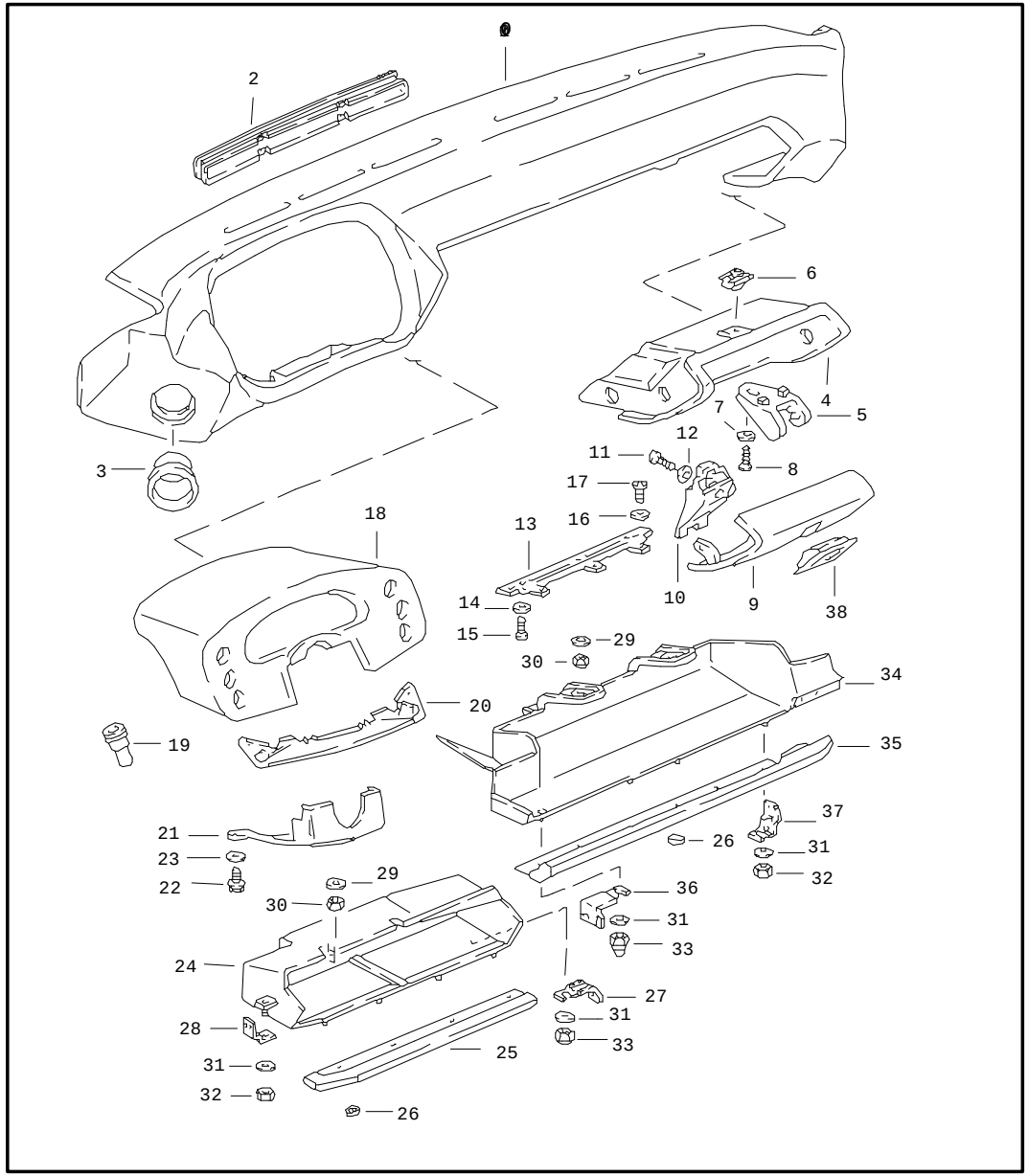

Pos	Part Number	Name	Remarks	Qty	Model
		dashboard trim			
1	928 552 023 04	dashboard trim leatherette	/LL	1	
	05T	black			
	4RB	brown			
	30B	blue			
	3MX	burgundy			
	4JX	greyish green	85-		
1	927 552 023 04	dashboard trim leatherette	/RL	1	
	05T	black			
	4RB	brown			
	30B	blue			
	3MX	burgundy			
	4JX	greyish green	85-		
1	928 552 021 52	dashboard trim leather	/LL	1	
	KZ2	black			
	4RB	brown			
	KZ3	blue			
	LG7	burgundy			
	LG6	dark green			
	NY3	greyish green	85-		
	6GX	ocean blue	85-		
	5NW	wild buffalo	85-		
1	927 552 021 52	dashboard trim leather	/RL	1	
	KZ2	black			
	4RB	brown			

Pos	Part Number	Name	Remarks	Qty	Model
	KZ3	blue			
	LG7	burgundy			
	LG6	dark green			
	NY3	greyish green	85-		
	6GX	ocean blue	85-		
	5NW	wild buffalo	85-		
2	928 552 309 50	frame	/L	1	M 981
	5XJ	black			
	70B	black			
2	928 552 310 50	frame	/R	1	M 981
	5XJ	black			
	70B	black			
3	928 552 057 03	cover air duct		2	
4	928 552 051 05	glove compartment	/LL	1	
	71B	black			
(4)	927 552 051 05	glove compartment	/RL	1	
	71B	black			
5	928 552 253 03	end plate		1	
6	999 507 029 02	speed nut		2	
7	900 151 002 07	washer A 5,3		2	
8	900 143 019 07	oval-head sheetmetal screw B 4,8 X 22		2	
9	928 552 053 03	cover leatherette	/LL -85	1	
	CA1	black			
	LA8	brown			
	CC2	blue			
	JQ5	burgundy			
	NY1	greyish green	85		
(9)	927 552 053 03	cover leatherette	/RL -85	1	
	CA1	black			
	LA8	brown			
	CC2	blue			
	JQ5	burgundy			
	NY1	greyish green	85		
9	928 552 053 04	glove box cover leatherette	/LL 86	1	
	CA1	black			
	LA8	brown			
	CC2	blue			
	JQ5	burgundy			
	NY1	greyish green			
(9)	927 552 053 04	glove box cover leatherette	/RL 86	1	
	CA1	black			
	LA8	brown			
	CC2	blue			
	JQ5	burgundy			
	NY1	greyish green			
(9)	928 552 059 52	cover leather	/LL	1	
	LA1	black			
	LA3	brown			
	LA5	blue			
	LL6	burgundy			

Pos	Part Number	Name	Remarks	Qty	Model
	LG6	dark green			
	NY3	greyish green	85-		
	6GX	ocean blue	85-		
	5NW	wild buffalo	85-		
(9)	927 552 059 52	cover leather	/RL	1	
	LA1	black			
	LA3	brown			
	LA5	blue			
	LL6	burgundy			
	LG6	dark green			
	NY3	greyish green	85-		
	6GX	ocean blue	85-		
	5NW	wild buffalo	85-		
10	928 552 903 02	catch with stipulated lock-no. state lock number		1	
11	900 143 113 07	tapping screw B 4,2 X 13		2	
12	N 011 523 11	washer A 5,3		2	
13	928 552 055 03	hinge		1	
14	900 151 002 07	washer A 5,3		3	
15	N 014 133 8	oval-head screw M 5 X 12		3	
16	N 011 523 11	washer A 5,3		3	
17	N 014 128 13	oval-head screw M 5 X 8		3	
18	928 552 031 02	instrument box	-85	1	
	05T	black			
	4RB	brown			
	30B	blue			
	3MX	burgundy			
	4JX	greyish green	85		
18	928 552 031 03	instrument box	86-	1	
	05T	black			
	4RB	brown			
	30B	blue			
	3MX	burgundy			
	4JX	greyish green			
19	928 552 049 02	spacer sleeve		4	
20	928 552 321 02	cover		1	
21	928 552 135 03	cover		1	
	1DB	black			
	4RB	brown			
	30B	blue			
	3MX	burgundy			
	4JX	greyish green	85-		
22	211 829 155	screw		2	
23	900 025 007 02	washer 8,4		2	
24	928 552 117 02	shelf driver's side	/LL	1	
	71B	black			
(24)	927 552 118 02	shelf driver's side	/RL 84-	1	AUT.
	71B	black			
(24)	927 552 118 03	shelf driver's side	/RL 84-	1	

Pos	Part Number	Name	Remarks	Qty	Model
	71B	black			
25	928 552 127 02	protective edging shelf leatherette	/LL	1	
	05T	black			
	30B	blue			
	4RB	brown			
	3MX	burgundy			
	4JX	greyish green	85-		
(25)	927 552 128 02	protective edging shelf leatherette	/RL 84-	1	
	05T	black			
	30B	blue			
	4RB	brown			
	3MX	burgundy			
	4JX	greyish green	85-		
25	928 552 127 50	protective edging shelf leather	/LL	1	
	KZ2	black			
	KZ3	blue			
	4RB	brown			
	LG7	burgundy			
	LG6	dark green			
	NY3	greyish green	85-		
	6GX	ocean blue	85-		
	5NW	wild buffalo	85-		
(25)	927 552 128 50	protective edging shelf leather	/RL 84-	1	

Pos	Part Number	Name	Remarks	Qty	Model
	KZ2	black			
	KZ3	blue			
	4RB	brown			
	LG7	burgundy			
	LG6	dark green			
	NY3	greyish green	85-		
	6GX	ocean blue	85-		
	5NW	wild buffalo	85-		
26	999 507 251 02	mecano-speed-fix		7	
27	927 552 381 02	bracket	/R -83	1	
(27)	927 552 381 02	bracket	/R 84-	1	
(28)	928 552 395 02	bracket	/L	1	
29	N 011 524 7	washer A 6,4		2	
30	900 085 003 02	cap nut M 6		2	
31	900 151 027 02	washer A 5,3		2	
32	N 011 005 14	hexagon nut M 5		1	
33	N 011 141 2	cap nut M 5		1	
34	928 552 077 02	shelf	/LL	1	
	71B	black			
(34)	927 552 077 02	shelf	/RL	1	
	71B	black			
35	928 552 079 02	protective edging shelf leatherette	/LL	1	
	05T	black			
	4RB	brown			

Pos	Part Number	Name	Remarks	Qty	Model
	30B	blue			
	3MX	burgundy			
	4JX	greyish green	85-		
(35)	927 552 079 02	protective edging shelf leatherette	/RL	1	
	05T	black			
	4RB	brown			
	30B	blue			
	3MX	burgundy			
	4JX	greyish green	85-		
(35)	928 552 097 50	protective edging shelf leather	/LL	1	
	KZ2	black			
	KZ3	blue			
	4RB	brown			
	LG7	burgundy			
	LG6	dark green			
	NY3	greyish green	85-		
	6GX	ocean blue	85-		
	5NW	wild buffalo	85-		
(35)	927 552 097 50	protective edging shelf leather	/RL	1	
	KZ2	black			
	KZ3	blue			
	4RB	brown			
	LG7	burgundy			
	LG6	dark green			

Pos	Part Number	Name	Remarks	Qty	Model
	NY3	greyish green	85-		
	6GX	ocean blue	85-		
	5NW	wild buffalo	85-		
36	928 552 382 02	bracket	/LL/L-83	1	
(36)	928 552 382 02	bracket	/L 84-	1	
(37)	928 552 395 02	bracket	/R	1	
38	928 552 315 50	rose		1	M 981
		- -- E N D -- -			

Model	Year	MG	SG	Illustration	Restrictions	Update	14:58	01.09.2004	PORSCHE	PET	PORSCHE
928	86	8	09	809-01		179					

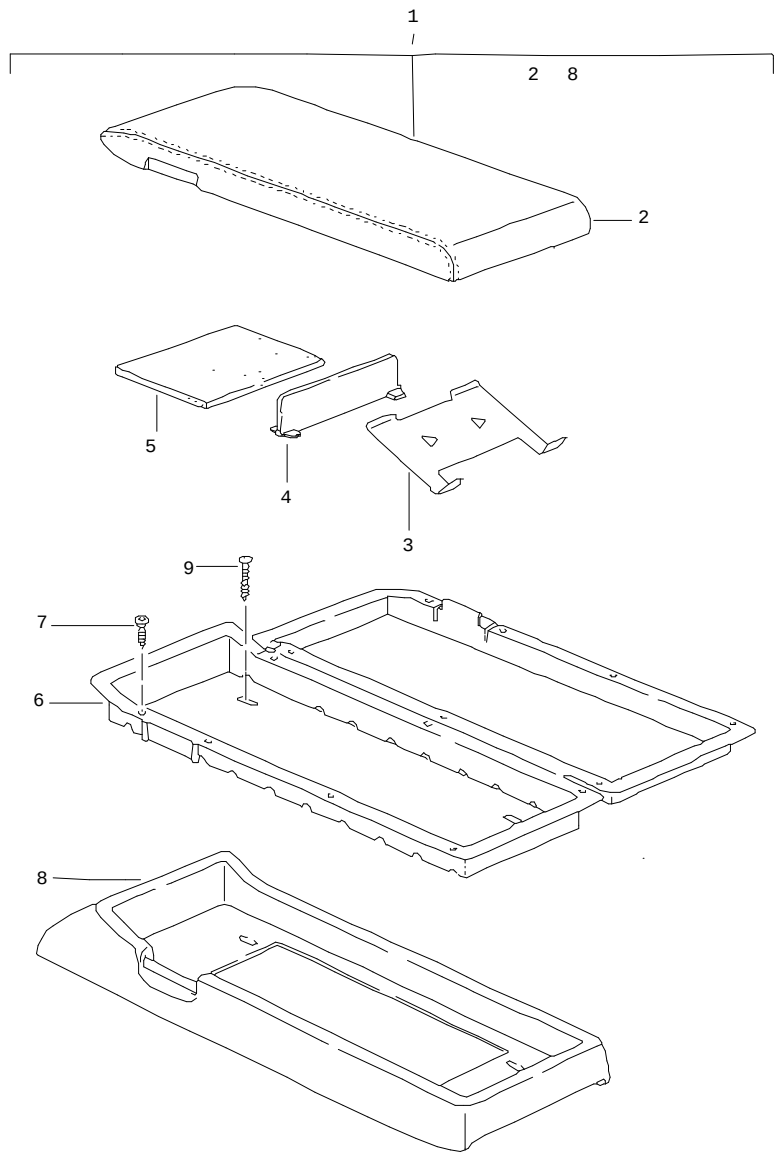

Pos	Part Number	Name	Remarks	Qty	Model
		cassette box			
1	928 555 701 53	cassette box leather	/LL	1	
	KZ2	black			
	KZ3	blue			
	KZ5	brown			
	LG7	burgundy			
	LG6	dark green			
	QC2	greyish green	85-		
	PY9	ocean blue	85-		
	PZ1	wild buffalo	85-		
(1)	927 555 701 53	cassette box leather	/RL	1	
	KZ2	black			
	KZ3	blue			
	KZ5	brown			
	LG7	burgundy			
	LG6	dark green			
	QC2	greyish green	85-		
	PY9	ocean blue	85-		
	PZ1	wild buffalo	85-		
2	928 555 705 51	cover leather	/LL	1	
	KZ2	black			
	KZ3	blue			
	KZ5	brown			
	LG7	burgundy			
	LG6	dark green			
	QC2	greyish green	85-		

Pos	Part Number	Name	Remarks	Qty	Model
	PY9	ocean blue	85-		
	PZ1	wild buffalo	85-		
(2)	927 555 705 51	cover leather	/RL	1	
	KZ2	black			
	KZ3	blue			
	KZ5	brown			
	LG7	burgundy			
	LG6	dark green			
	QC2	greyish green	85-		
	PY9	ocean blue	85-		
	PZ1	wild buffalo	85-		
3	928 555 731 02	cassette support		8	
	01C	satin black			
4	928 555 741 02	partition panel		1	
5	928 555 735 03	cover		1	
6	928 555 729 03	insert	/LL	1	
	01C	satin black			
(6)	927 555 729 03	insert	/RL	1	
	01C	satin black			
7	900 143 065 07	tapping screw B2,9 X 9,5		14	
8	928 555 703 51	lower part leather	/LL	1	
	KZ2	black			
	KZ3	blue			
	KZ5	brown			
	LG7	burgundy			
	LG6	dark green			

Pos	Part Number	Name	Remarks	Qty	Model
	QC2	greyish green	85-		
	PY9	ocean blue	85-		
	PZ1	wild buffalo	85-		
(8)	927 555 703 51	lower part leather	/RL	1	
	KZ2	black			
	KZ3	blue			
	KZ5	brown			
	LG7	burgundy			
	LG6	dark green			
	QC2	greyish green	85-		
	PY9	ocean blue	85-		
	PZ1	wild buffalo	85-		
P 9	999 450 001 07	round head screw B 4,2 X 25		4	

- -- E N D -- -

Model	Year	MG	SG	Illustration	Restrictions	Update				
928	86	8	09	809-05		179	14:59	01.09.2004	PORSCHE	PET	PORSCHE

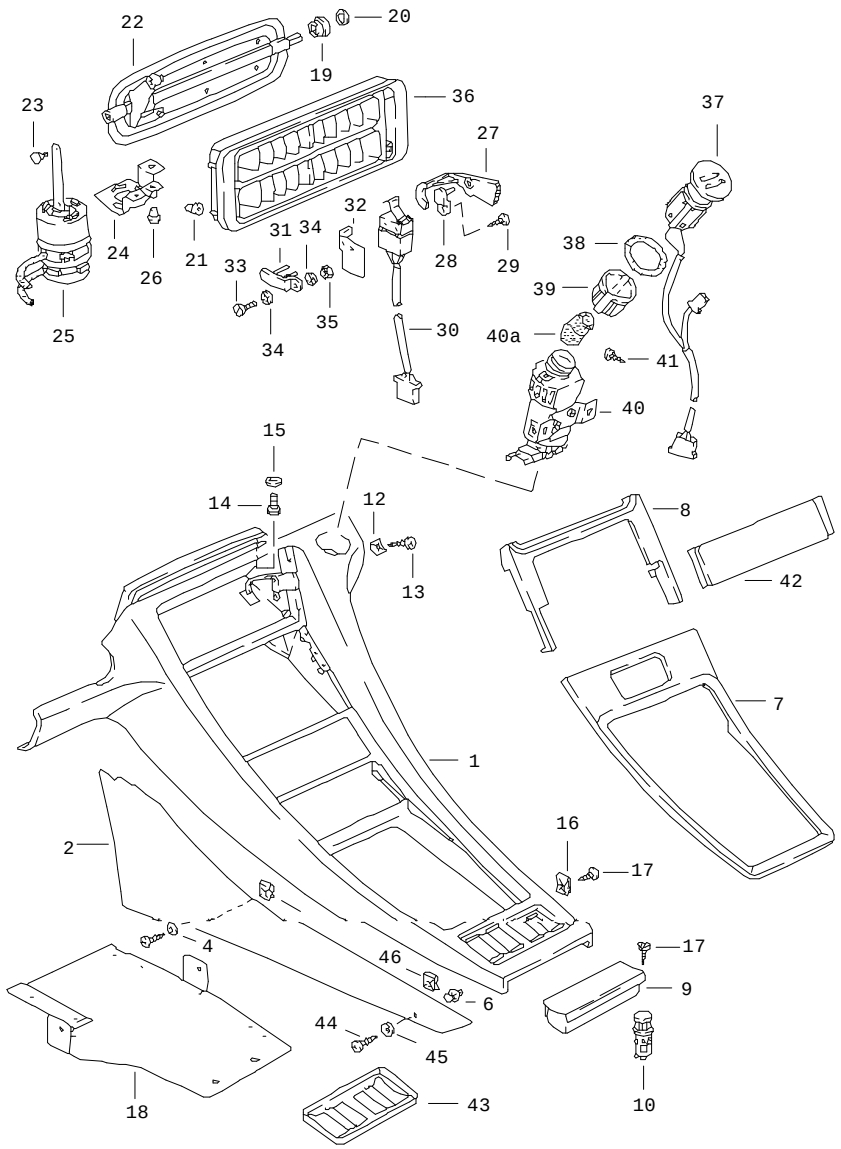

Pos	Part Number	Name	Remarks	Qty	Model
		centre console			
1	928 552 043 08	centre console leatherette	/LL	1	
	CA4	black			
	CC3	blue			
	LA8	brown			
	JQ5	burgundy			
	NY1	greyish green	85-		
(1)	927 552 043 08	centre console leatherette	/RL	1	
	CA4	black			
	CC3	blue			
	LA8	brown			
	JQ5	burgundy			
	NY1	greyish green	85-		
(1)	928 552 045 55	centre console leather	/LL	1	
	LA1	black			
	LA5	blue			
	LA3	brown			
	LG6	dark green			
	LL6	burgundy			
	NY3	greyish green	85-		
	6GX	ocean blue	85-		
	5NW	wild buffalo	85-		
(1)	927 552 045 55	centre console leather	/RL	1	
	LA1	black			
	LA5	blue			

Pos	Part Number	Name	Remarks	Qty	Model
	LA3	brown			
	LG6	dark green			
	LL6	burgundy			
	NY3	greyish green	85-		
	6GX	ocean blue	85-		
	5NW	wild buffalo	85-		
2	927 552 073 02	lining carpet	/L	1	
	70E	black			
	60A	grey			
	40E	brown			
	30B	blue			
	2FL	grey-beige	-84,86		
	80E	burgundy			
	8JK	greyish green	85-		
	80S	can-can-red			
	6JD	dark green			
	1VD	champagne			
	2YN	white	85-		
(2)	928 552 074 02	lining carpet	/R	1	
	70E	black			
	60A	grey			
	40E	brown			
	30B	blue			
	2FL	grey-beige	-84,86		
	80E	burgundy			
	8JK	greyish green	85-		
	80S	can-can-red			
	6JD	dark green			
	1VD	champagne			
	2YN	white	85-		
3	N 014 098 6	tapping screw 4,8 X 16		4	
4	999 591 437 07	washer 4,8		4	
5	999 507 002 02	speed nut		2	
6	823 867 299	clip F >>92FS8 40159 F >>92FS8 49561		2	(J)
7	928 552 047 07	cover		1	
(7)	928 552 047 09	cover for cars with leather		1	M 570
7	928 552 047 08	cover		1	
(7)	928 552 047 10	cover for cars with leatherette	85-	1	M 570
8	928 552 362 00	cover for cars with leatherette		1	
8	928 552 362 50	cover for cars with leather		1	
9	928 552 060 02	ashtray		1	
10	928 652 103 00	cigarette lighter		1	
11	900 144 017 07	tapping screw		2	
12	999 507 030 02	speed nut 4,8		3	
13	900 187 018 02	hexagon-head tapping screw 4,8 X 16		1	
14	900 075 145 02	hexagon-head bolt M 5 X 16		2	

Pos	Part Number	Name	Remarks	Qty	Model
15	900 025 003 02	washer A 5,3		2	
16	999 507 002 02	speed nut		2	
17	900 143 046 07	tapping screw B 4,8 X 16		6	
18	928 552 389 02	plate cruise control regulator receiving part		1	
19	928 574 291 02	bearing sleeve		2	
20	999 591 459 02	mecano-speed-fix		2	
21	999 702 111 50	grommet		4	
22	928 573 137 02	flap F >>92DS8 41849 F >>92DS8 49562		1	 (J)
(22)	928 574 125 02	flap F 92DS8 41850>> F 92DS8 49563>>		1	 (J)
23	928 574 735 02	bolt F >>92DS8 41849 F >>92DS8 49562		1	 (J)
24	928 573 315 02	support F >>92DS8 41849 F >>92DS8 49562		1	 (J)
25	928 573 094 02	vacuum unit F >>92DS8 41849 F >>92DS8 49562		1	 (J)
26	999 190 215 30	rivet D 4,0 F >>92DS8 41849 F >>92DS8 49562		3	 (J)
27	928 573 649 02	actuating lever F >>92DS8 41849 F >>92DS8 49562		1	 (J)
(27)	928 574 649 02	actuating lever F 92DS8 41850>> F 92DS8 49563>>		1	 (J)
	70B	satin black			
28	928 574 645 02	fastening part		1	

Pos	Part Number	Name	Remarks	Qty	Model
29	900 143 031 02	oval-head sheetmetal screw B 4,2 X 9,5		1	
30	928 613 049 00	micro-changeover switch F >>92DS8 41849 F >>92DS8 49562		1	 (J)
(30)	928 613 049 01	micro-changeover switch F 92DS8 41850>> F 92DS8 49563>>		1	 (J)
31	928 573 747 02	support F >>92DS8 41849 F >>92DS8 49562		1	 (J)
(31)	928 573 747 04	support F 92DS8 41850>> F 92DS8 49563>>		1	 (J)
32	928 573 745 02	support F >>92DS8 41849 F >>92DS8 49562		1	 (J)
33	E 900 119 024 02	pan-head screw M 4 X 12		1	
34	N 042 122 2	shake-proof washer		2	
35	N 011 004 6	hexagon nut M 4		1	
36	928 574 040 03	frame for cars with leatherette		1	
36	928 574 040 50	frame for cars with leather		1	
37	928 624 041 00	interior sensor		1	
38	928 573 344 02	sealing ring		1	
39	928 573 527 02	connecting piece		1	
40	928 624 113 01	interior sensor	85-	1	
40A	928 624 312 01	hose	/LL	1	
(40A)	928 624 312 00	hose	/RL	1	
41	N 013 968 7	tapping screw B 4,8 X 13		2	

Pos	Part Number	Name	Remarks	Qty	Model
42	928 552 270 05	cover		1	
	70B	black radio cover			
43	928 552 313 50	frame		1	
	70B	black for tip switch for cars with leather			
44	N 014 098 6	tapping screw 4,8 X 16 F 92FS8 40160>> F 92FS8 49562>>		2	 (J)
45	999 591 437 07	washer 4,8 F 92FS8 40160>> F 92FS8 49562>>		2	 (J)
46	999 507 002 02	speed nut F 92FS8 40160>> F 92FS8 49562>>		2	 (J)
		- -- E N D -- -			

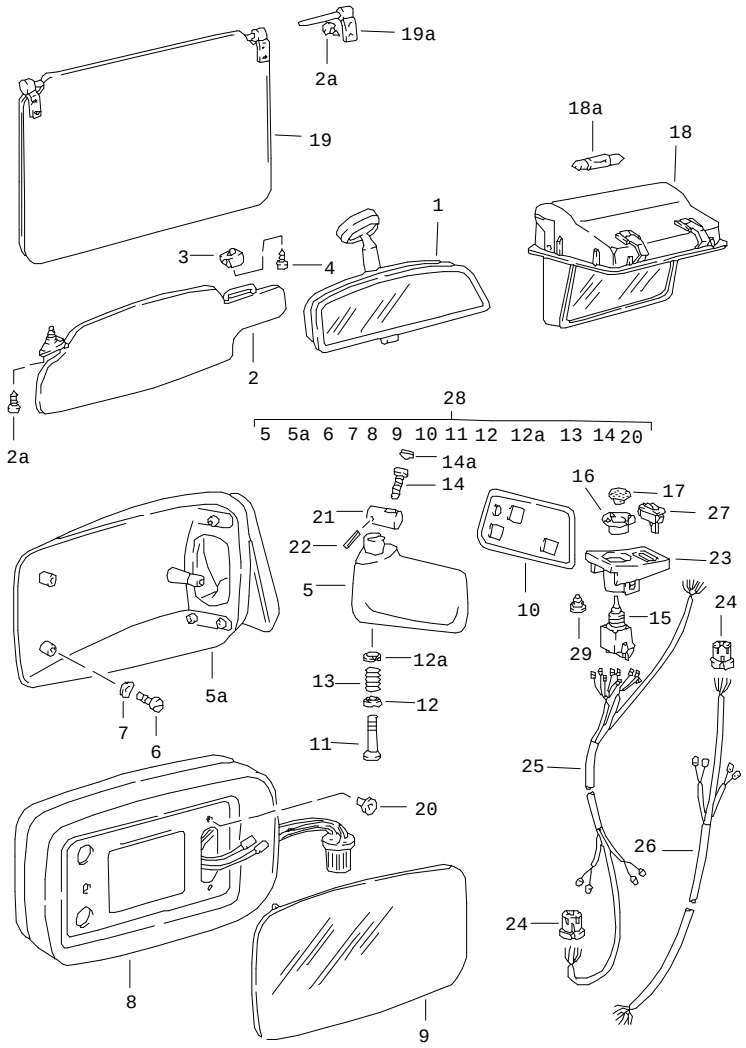

Pos	Part Number	Name	Remarks	Qty	Model
		interior mirror sun visor door mirror			
1	477 857 511	interior mirror		1	
2	928 731 031 06	sun visor without mirror leatherette	/L	1	
	CA9	black			
	LA7	brown			
	CC1	blue			
	JQ5	burgundy			
	NY2	greyish green			
(2)	928 731 032 07	sun visor without mirror leatherette	/R	1	
	CA9	black			
	LA7	brown			
	CC1	blue			
	JQ5	burgundy			
	NY2	greyish green			
(2)	927 731 031 04	sun visor with mirror leatherette	/L -85	1	M 650
	CA9	black			
	LA7	brown			
	CC1	blue			
	JQ5	burgundy			
	NY2	greyish green	85		
(2)	928 731 032 06	sun visor with mirror leatherette	/R -85	1	M 650
	CA9	black			

Pos	Part Number	Name	Remarks	Qty	Model
	LA7	brown			
	CC1	blue			
	JQ5	burgundy			
	NY2	greyish green	85		
2	928 731 031 50	sun visor without mirror leather	/L -85	1	
	LA1	black			
	LA3	brown			
	LA5	blue			
	LL6	burgundy			
	LG6	dark green			
	NY3	greyish green			
	QD2	ocean blue			
	QD3	wild buffalo			
(2)	928 731 032 50	sun visor without mirror leather	/R -85	1	
	LA1	black			
	LA3	brown			
	LA5	blue			
	LL6	burgundy			
	LG6	dark green			
	NY3	greyish green			
	QD2	ocean blue			
	QD3	wild buffalo			
(2)	927 731 031 50	sun visor with mirror leather	/L -85	1	M 650
	LA1	black			
	LA3	brown			
	LA5	blue			
	LL6	burgundy			
	LG6	dark green			
	NY3	greyish green	85		
	QD2	ocean blue	85		
	QD3	wild buffalo	85		
(2)	928 731 032 51	sun visor with mirror leather	/R -85	1	M 650
	LA1	black			
	LA3	brown			
	LA5	blue			
	LL6	burgundy			
	LG6	dark green			
	NY3	greyish green	85		
	QD2	ocean blue	85		
	QD3	wild buffalo	85		
(2)	928 731 031 11	sun visor with mirror leatherette	/L 86	1	M 650
	CA9	black			
	LA7	brown			
	CC1	blue			
	JQ5	burgundy			
	NY2	greyish green			
(2)	928 731 032 11	sun visor with mirror leatherette	/R 86	1	M 650
	CA9	black			

Pos	Part Number	Name	Remarks	Qty	Model
	LA7	brown			
	CC1	blue			
	JQ5	burgundy			
	NY2	greyish green			
(2)	928 731 031 12	sun visor with mirror leatherette	/L 86	1	M 650 (S) (AUS)
	CA9	black			
	LA7	brown			
	CC1	blue			
	JQ5	burgundy			
	NY2	greyish green			
(2)	928 731 032 12	sun visor with mirror leatherette	/R 86	1	M 650 (S) (AUS)
	CA9	black			
	LA7	brown			
	CC1	blue			
	JQ5	burgundy			
	NY2	greyish green			
(2)	928 731 053 52	sun visor without mirror leather	/L 86	1	
	LA1	black			
	LA3	brown			
	LA5	blue			
	LL6	burgundy			
	LG6	dark green			
(2)	928 731 054 52	sun visor without mirror leather	/R 86	1	
	LA1	black			
	LA3	brown			
	LA5	blue			
	LL6	burgundy			
	LG6	dark green			
(2)	928 731 053 50	sun visor with mirror leather	/L 86	1	M 650
	LA1	black			
	LA3	brown			
	LA5	blue			
	LL6	burgundy			
	LG6	dark green			
	NY3	greyish green			
	QD2	ocean blue			
	QD3	wild buffalo			
(2)	928 731 054 50	sun visor with mirror leather	/R 86	1	M 650
	LA1	black			
	LA3	brown			
	LA5	blue			
	LL6	burgundy			
	LG6	dark green			
	NY3	greyish green			
	QD2	ocean blue			
	QD3	wild buffalo			
(2)	928 731 053 51	sun visor with mirror leather	/L 86	1	M 650 (S) (AUS)

Pos	Part Number	Name	Remarks	Qty	Model
	LA1	black			
	LA3	brown			
	LA5	blue			
	LL6	burgundy			
	LG6	dark green			
	NY3	greyish green			
	QD2	ocean blue			
	QD3	wild buffalo			
(2)	928 731 054 51	sun visor with mirror leather	/R 86	1	M 650 (S) (AUS)
	LA1	black			
	LA3	brown			
	LA5	blue			
	LL6	burgundy			
	LG6	dark green			
	NY3	greyish green			
	QD2	ocean blue			
	QD3	wild buffalo			
2A	900 145 016 07	tapping screw 4,2 X 19		10	
3	911 731 331 00	support		2	
3	911 731 331 00	support		2	M 650
4	900 143 034 07	oval-head sheetmetal screw 3,9 X 19		2	
5	928 731 141 06	mirror base	/LL/L	1	
(5)	928 731 143 08	mirror base	/LL/R	1	
(5)	927 731 141 06	mirror base	/RL/R	1	
(5)	927 731 143 08	mirror base	/RL/L	1	

Pos	Part Number	Name	Remarks	Qty	Model
5A	911 731 043 03	mirror housing	/L	1	
(5A)	911 731 044 03	mirror housing	/R	1	
6	999 143 003 02	hexagon-head bolt M 5 X 10		3	
7	N 012 222 4	spring washer A 5		3	
8	911 731 027 06	frame	/L	1	
(8)	911 731 028 06	frame	/R	1	
9	911 731 035 08	mirror glass plan		1	
(9)	911 731 035 09	mirror glass convex		1	(J)
10	928 731 247 03	desk pad	/LL/L	1	
(10)	928 731 249 04	desk pad	/LL/R85-	1	
(10)	928 731 249 03	desk pad	/LL/R-84	1	
(10)	927 731 247 03	desk pad	/RL/R	1	
(10)	927 731 249 03	desk pad	/RL/L-84	1	
(10)	927 731 249 04	desk pad	/RL/L85-	1	
11	911 731 257 02	guide tube		1	
12	911 731 345 02	adjusting washer lower		1	
12A	911 731 347 00	adjusting washer upper		1	
13	911 731 029 01	compression spring		1	
14	999 218 019 02	screw M 5 X 45		1	
14A	999 703 137 40	cap		1	
15	911 613 115 00	switch		1	
16	928 555 463 02	threaded bush		1	
17	928 613 462 00	knob		1	
18	928 731 013 02	make-up mirror		1	

Pos	Part Number	Name	Remarks	Qty	Model
18A	900 631 105 90	bulb		1	
19	928 731 035 02	sun visor leatherette	/H -85	2	
	70A	black			
	30B	blue			
	4RB	brown			
	3MX	burgundy			
	2KA	greyish green	85		
19	928 731 035 03	sun visor leatherette	/H 86	2	
	70A	black			
	30B	blue			
	4RB	brown			
	3MX	burgundy			
	2KA	greyish green	85-		
19	928 731 035 50	sun visor leather	/H -85	2	
	LA1	black			
	LA3	brown			
	LA5	blue			
	LL6	burgundy			
	LG6	dark green			
	NY3	greyish green	85		
	QD2	ocean blue	85		
	QD3	wild buffalo	85		
19	928 731 035 51	sun visor leather	/H 86	2	
	LA1	black			
	LA3	brown			
	LA5	blue			
	LL6	burgundy			
	LG6	dark green			
	NY3	greyish green			
	QD2	ocean blue			
	QD3	wild buffalo			
19A	928 731 043 02	bearing bracket	/L	1	
19A	928 731 044 02	bearing bracket	/R	1	
20	999 703 128 40	grommet mirror glass		3	
(21)	928 531 235 03	threaded piece		2	
22	N 013 295 1	tensioning sleeve		1	
23	928 555 461 02	mounting piece	/LL	1	
(23)	927 555 461 02	mounting piece	/RL	1	
24	803 971 979	plug socket 7-pole		1	
		electric equipment door mirror passenger's side			
25	928 612 164 02	wiring harness door driver's side		1	
26	928 612 166 02	wiring harness door passenger's side		1	
27	911 613 113 00	changeover switch		1	
28	E 928 731 927 02	door mirror plan	/LL/L	1	
(28)	928 731 928 02	door mirror plan	/LL/R	1	
(28)	928 731 929 02	door mirror convex	/LL/L	1	

Pos	Part Number	Name	Remarks	Qty	Model
(28)	928 731 929 02	door mirror convex	/L	1	(J)
(28)	A 928 731 930 02	door mirror convex	/LL/R	1	
(28)	A 928 731 930 02	door mirror convex	/R	1	(J)
(28)	E 927 731 927 02	door mirror plan	/RL/L	1	
(28)	927 731 928 02	door mirror plan	/RL/R	1	
(28)	927 731 929 02	door mirror convex	/RL/L	1	
29	928 613 423 00	protective grommet F 92ES8 40238>> F 92ES8 49567>>		1	 (J)
		- -- E N D -- -			

Pos	Part Number	Name	Remarks	Qty	Model

Model	Year	MG	SG	Illustration	Restrictions	Update				
928	86	8	09	809-15		179	14:59	01.09.2004	PORSCHE	PET	PORSCHE

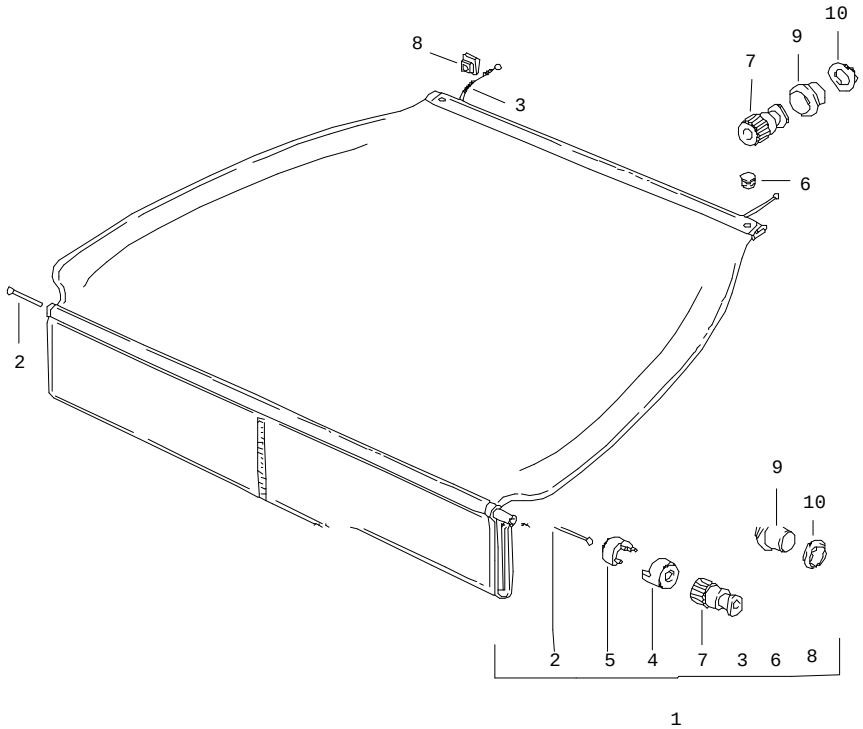

Pos	Part Number	Name	Remarks	Qty	Model
		luggage boot cover			
1	928 555 179 02	luggage boot cover		1	
	70G	black			
	30D	blue			
	40B	brown			
	2LB	burgundy			
	6JG	greyish green	85		
-	999 701 639 40	round rubber cord		*	
2	-	1150 MM		1	
3	-	740 MM		2	
4	928 555 795 02	end piece of pipe		2	
5	928 555 785 02	clamp		2	
6	900 190 005 03	tubular rivet B 4 X 9 X 6		2	
7	928 555 775 02	end piece		4	
8	928 555 791 02	rose		2	
	70B	black			
9	928 555 777 02	end piece of rope		4	
10	999 591 484 02	clamping washer		4	
		- -- E N D -- -			

Model	Year	MG	SG	Illustration	Restrictions	Update				
928	86	8	10	810-00		179	15:00	01.09.2004	PORSCHE	PET	PORSCHE

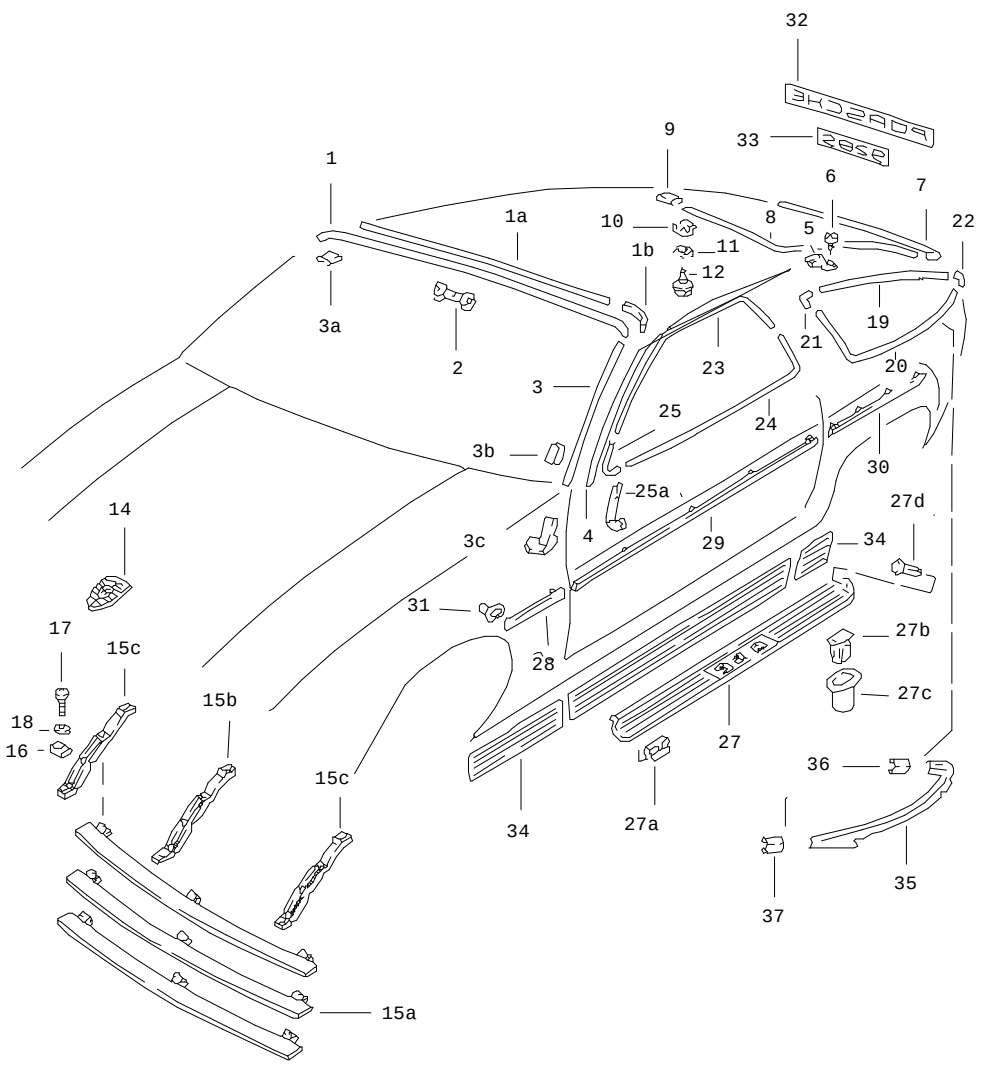

Pos	Part Number	Name	Remarks	Qty	Model
		cover strip decorative fittings logo			
1	928 559 103 04	cover strip		1	
	70K	black			
1A	928 559 295 02	adhesive tape		1	
1B	928 559 245 03	sealing strap		2	
2	928 559 285 02	clamp		9	
3	928 559 105 05	water drain strip	/L	1	
	70K	black			
(3)	928 559 106 05	water drain strip	/R	1	
	70K	black			
(3A)	928 559 213 05	sleeve	/L	1	
	70K	black			
3A	928 559 214 05	sleeve	/R	1	
	70K	black			
3B	928 559 107 02	clamp		9	
3C	928 559 111 02	water drain strip	/L	1	
(3C)	928 559 112 02	end piece	/R	1	
4	928 559 119 04	roof edge strip	/L	1	
4	928 559 120 04	roof edge strip	/R	1	
5	928 559 121 03	roof edge strip	/L	1	
(5)	928 559 122 03	roof edge strip terminal piece	/R	1	
6	900 145 044 07	tapping screw 4,2 X 19		2	
7	928 559 151 04	cover strip		1	
	70K	black lower			
8	928 559 153 06	cover strip	/L	1	M 470

Pos	Part Number	Name	Remarks	Qty	Model
	70K	black			
8	928 559 153 05	cover strip	/L	1	
	70K	black for cars with spoiler			
8	928 559 154 06	cover strip	/R	1	M 470
	70K	black			
8	928 559 154 05	cover strip	/R	1	
	70K	black for cars with spoiler			
9	928 559 155 03	sleeve		3	
	70K	black			
10	928 559 133 04	retaining clip		8	
10	928 559 133 04	retaining clip		19	M 470
11	928 559 143 02	sealing ring		8	
11	928 559 143 02	sealing ring		19	M 470
12	999 919 030 02	screw		8	
12	999 919 030 02	screw		19	M 470
14	A 901 559 210 20	lid emblem		1	
14	993 559 211 00	lid emblem		1	
15A	928 559 135 04	cross strut		3	
15B	E 928 559 137 02	centre web		1	
15C	928 559 139 02	outer part		2	
16	928 559 141 02	desk pad		2	
17	E 999 921 004 02	oval-head screw M 4 X 15 F >>92ES8 41157 F >>92ES8 49584		9	(J)
17	999 919 018 00	screw KA 35 X 10 F 92ES8 41158>> F 92ES8 49585>>		9	(J)
18	900 151 028 02	washer B 4,3		9	
19	928 543 419 08	moulding	/L	1	M 470
	70K	black upper			
19	928 543 419 07	moulding F >>92FS8 41593 F >>92FS8 49616	/L	1	(J)
	70K	black rear spoiler			
19	928 543 419 09	moulding F 92FS8 41594>> F 92FS8 49617>>	/L	1	(J)
	70K	black rear spoiler			
(19)	928 543 420 08	moulding	/R	1	M 470
	70K	black			
(19)	928 543 420 07	moulding F >>92FS8 41593 F >>92FS8 49616	/R	1	(J)
	70K	black rear spoiler			
(19)	928 543 420 09	moulding F 92FS8 41594>> F 92FS8 49617>>	/R	1	(J)
	70K	black rear spoiler			
20	928 543 417 08	moulding	/L	1	M 470
	70K	black lower			
20	928 543 417 07	moulding F >>92FS8 41593 F >>92FS8 49616	/L	1	(J)

Pos	Part Number	Name	Remarks	Qty	Model
	70K	black rear spoiler			
20	928 543 417 09	moulding F 92FS8 41594>> F 92FS8 49617>>	/L	1	(J)
	70K	black rear spoiler			
(20)	928 543 418 08	moulding	/R	1	M 470
	70K	black lower			
(20)	928 543 418 07	moulding F >>92FS8 41593 F >>92FS8 49616	/R	1	(J)
	70K	black rear spoiler			
(20)	928 543 418 09	moulding F 92FS8 41594>> F 92FS8 49617>>	/R	1	(J)
	70K	black rear spoiler			
21	928 543 413 04	end piece		2	
	70K	black upper			
22	928 543 415 05	end piece		2	
	70K	black lower			
23	928 537 311 04	moulding	/L	1	
	70K	black upper			
23	928 537 312 04	moulding	/R	1	
	70K	black upper			
24	928 537 313 04	moulding	/L	1	
	70K	black			
24	928 537 314 04	moulding	/R	1	

Pos	Part Number	Name	Remarks	Qty	Model
	70K	black			
25	928 537 301 05	moulding connection	/L	1	
	70K	black			
25	928 537 302 05	moulding connection	/R	1	
	70K	black			
25A	928 537 369 03	filler piece	/L	1	
(25A)	928 537 370 03	filler piece	/R	1	
-	900 143 114 07	tapping screw B 3,5 X 9,5		2	
27	928 551 055 02	scuff plate	/L	1	
(27)	928 551 056 02	scuff plate	/R	1	
27A	928 551 123 02	clamp		12	
27B	999 591 451 40	clamp		12	
27C	999 702 116 40	grommet		12	
27D	999 591 519 40	expansion rivet		2	
		lateral protective moulding			
28	928 559 037 03	protective moulding	/V/L	1	
28	928 559 038 03	protective moulding wing	/V/R	1	
-	928 559 175 03	adhesive tape wing		2	
29	928 559 033 03	protective moulding	/L	1	
29	928 559 034 03	protective moulding door	/R	1	
-	928 559 965 00	adhesive tape door		2	
30	928 559 041 03	protective moulding	/H/L	1	
30	928 559 042 03	protective moulding side section	/H/R	1	

Pos	Part Number	Name	Remarks	Qty	Model
-	928 559 181 03	adhesive tape side section		2	
31	928 559 281 02	bush		10	
32	E 928 505 325 04	logo dark grey		1	
32	E 928 505 325 05	logo light grey		1	
33	E 928 505 335 04	logo dark grey		1	
33	E 928 505 335 05	logo light grey		1	
34	928 559 075 02	stone guard film	/L	1	
34	928 559 076 02	stone guard film 1 set	/R	1	
35	928 543 437 03	trim frame	/L	1	
	70K	black rear spoiler			
35	928 543 438 03	trim frame	/R	1	
	70K	black rear spoiler			
36	928 543 439 03	sleeve		2	
	70K	black rear spoiler			
37	928 543 439 04	sleeve	/L	1	
	70K	black rear spoiler			
37	928 543 440 04	sleeve	/R	1	
	70K	black rear spoiler			
		- -- E N D -- -			

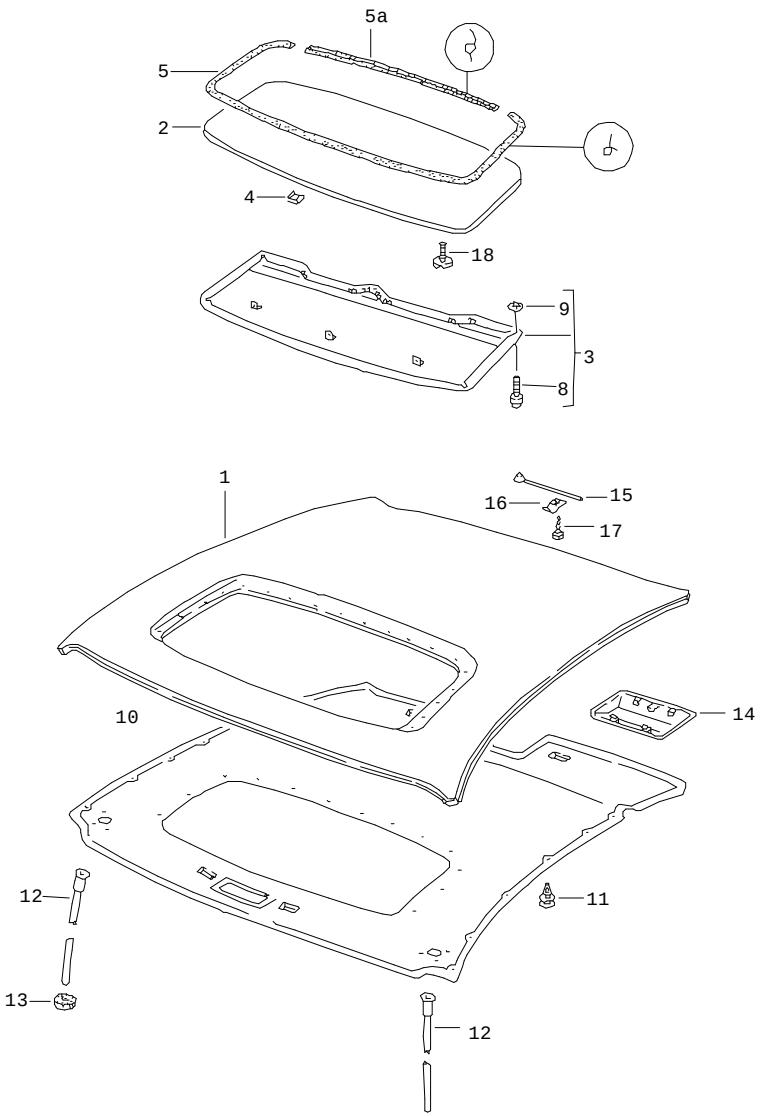

Pos	Part Number	Name	Remarks	Qty	Model
		sunroof			
1	928 503 027 60	roof		1	
2	928 564 033 41	cover		1	
3	928 564 069 40	roof frame leatherette		1	
	70A	black			
	1HH	blue			
	4RB	brown			
	3MX	burgundy			
	2KA	greyish green	85-		
(3)	928 564 069 50	roof frame leather		1	
	KZ2	black			
	KZ3	blue			
	4RB	brown			
	LG7	burgundy			
	LG6	dark green			
	QC2	greyish green	85-		
	PY9	ocean blue	85-		
	PZ1	wild buffalo	85-		
4	999 591 898 02	clamp		18	
5	928 564 259 02	gasket		1	
5A	928 564 261 02	gasket		1	
8	928 564 399 40	sliding piece		3	
9	999 591 377 02	speed nut		3	
10	928 555 071 62	rooflining leatherette		1	
	70A	black			
	1HH	blue			

Pos	Part Number	Name	Remarks	Qty	Model
	4RB	brown			
	3MX	burgundy			
	1JL	greyish green	85-		
(10)	928 555 071 63	rooflining leather		1	
	KZ2	black			
	KZ3	blue			
	4RB	brown			
	LG7	burgundy			
	LG6	dark green			
	QC2	greyish green	85-		
	PY9	ocean blue	85-		
	PZ1	wild buffalo	85-		
11	999 591 559 40	clip		10	
12	928 564 413 02	water drain hose		2	
13	021 119 569 A	rubber sleeve		2	
14	928 555 301 60	cover leatherette		1	
	70A	black			
	1HH	blue			
	4RB	brown			
	3MX	burgundy			
	2KA	greyish green	85-		
(14)	928 555 301 61	cover leather		1	
	1AJ	black			
	30B	blue			
	4RB	brown			
	7LD	burgundy			
	6JD	dark green			
	5JX	greyish green	85-		
	6GX	ocean blue	85-		
	5NW	wild buffalo	85-		
15	928 564 081 02	spring		1	
16	928 564 379 02	clamping piece		1	
17	N 013 970 5	tapping screw B 4,8 X 9,5		1	
18	900 072 003 02	adjusting screw M 5 X 12		2	

- -- E N D -- -

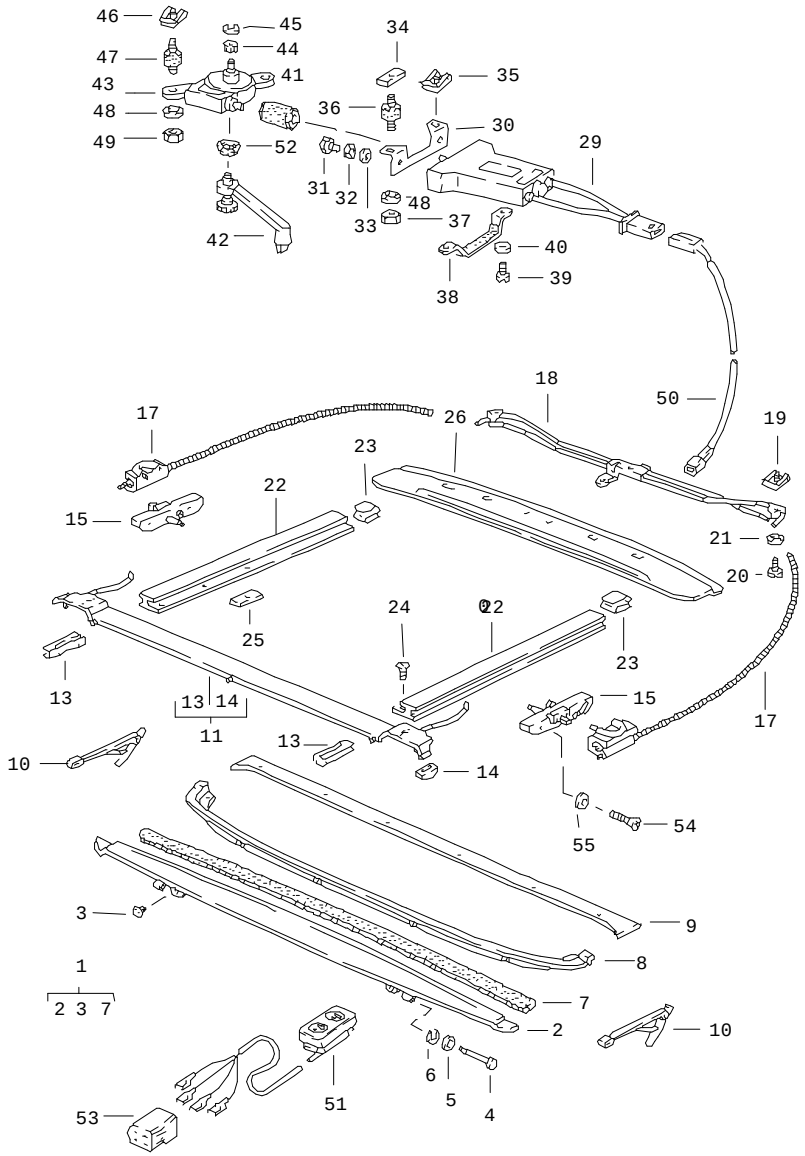

Pos	Part Number	Name	Remarks	Qty	Model
		sunroof mounting parts			
1	928 564 013 02	air deflector		1	
2	928 564 023 02	wind deflector plate		1	
3	928 564 629 02	rubber buffer		2	
4	999 088 009 07	bolt	-85	2	
4	999 088 009 07	bolt	86	2	
5	E 900 089 015 07	washer		2	
6	900 116 001 07	lock washer		2	
7	928 564 358 02	protective edging		1	
8	928 564 341 02	cover F >>92ES8 41258 F >>92ES8 49594	/V	1	(J)
8	928 564 341 03	cover F 92ES8 41259>> F 92ES8 49595>>		1	(J)
9	928 564 105 02	cover strip F >>92ES8 41258 F >>92ES8 49594		1	(J)
9	928 564 105 03	cover strip F 92ES8 41259>> F 92ES8 49595>>		1	(J)
10	928 564 057 02	hinge	/L	1	
10	928 564 058 02	hinge	/R	1	
11	928 564 061 40	guide	/V	1	
13	928 564 267 02	slide		2	
14	928 564 268 03	guide shoe		2	
15	928 564 045 42	guide	/L	1	
(15)	928 564 046 42	guide F >>92ES8 41593	/R	1	
(15)	928 564 046 42	guide F 92ES8 41594>>	/R	1	

Pos	Part Number	Name	Remarks	Qty	Model
17	928 564 083 43	guide with shaft	/L	1	
17	928 564 084 43	guide with shaft	/R	1	
18	928 564 209 40	guide tube		1	
19	999 507 248 02	speed nut M 5		2	
20	N 014 133 8	oval-head screw M 5 X 12		3	
21	N 012 005 3	lock ring B 5		2	
22	928 564 015 41	guide rail F >>92ES8 41258 F >>92ES8 49594	/L	1	 (J)
22	928 564 015 42	guide rail F 92ES8 41259>> F 92ES8 49595>>	/L	1	 (J)
22	928 564 016 41	guide rail F >>92ES8 41258 F >>92ES8 49594	/R	1	 (J)
22	928 564 016 42	guide rail F 92ES8 41259>> F 92ES8 49595>>		1	 (J)
23	999 591 448 02	fixing clip		2	
24	900 269 052 00	countersunk-head screw M 4 X 10 F >>92ES8 41258 F >>92ES8 49594		6	 (J)
24	900 269 052 07	countersunk-head screw M 4 X 10 F 92ES8 41259>> F 92ES8 49595>>		6	 (J)
25	928 502 617 60	threaded plate M 4		2	
26	928 564 167 41	water drain plate		1	
29	928 624 007 00	motor	-83	1	
(29)	911 624 016 03	motor	84-	1	
30	928 624 105 00	motor console	-83	1	
(30)	928 624 105 02	motor console	84-	1	
31	N 010 208 5	hexagon-head bolt M 6 X 8	-83	2	
-	N 011 005 14	hexagon nut M 5	84-	2	
32	N 012 006 4	lock ring B 6	-83	2	
32	N 012 005 3	lock ring B 5	84-	2	
33	N 011 524 7	washer A 6,4	-83	2	
33	900 025 003 02	washer A 5,3	84-	2	
34	E 928 502 617 61	threaded plate M 5	-83	1	
35	999 507 248 02	speed nut M 5		1	
36	999 703 308 00	bonded rubber mounting		2	
37	N 011 005 14	hexagon nut M 5		2	
38	928 624 011 00	motor mount	-83	1	
(38)	928 624 011 02	motor mount	84-	1	
39	N 013 883 3	tapping screw B 4,8 X 9,5		1	
40	900 025 003 02	washer A 5,3		1	
41	911 624 103 00	clutch		1	
42	901 564 085 05	crank		1	
43	928 564 025 02	transmission		1	
44	928 564 125 02	drive pinion		1	
45	900 116 003 01	lock washer		1	

Pos	Part Number	Name	Remarks	Qty	Model	Pos	Part Number	Name	Remarks	Qty	Model
46	999 507 248 02	speed nut		2							
47	999 703 306 00	bonded rubber mounting		2							
48	N 012 005 3	lock ring B 5		2							
49	N 011 005 14	hexagon nut M 5		2							
50	928 612 006 01	wiring harness		1							
51	928 613 120 00	tip switch		1							
52	E 901 564 663 05	cap		1							
53	928 612 413 03	connector housing		1							
54	999 217 008 02	hexagon-head bolt M 5 X 10		4							
55	900 025 003 02	washer A 5,3		4							
		- -- E N D -- -									

Model	Year	MG	SG	Illustration	Restrictions	Update				
928	86	8	12	812-00		179	15:00	01.09.2004	PORSCHE	PET	PORSCHE

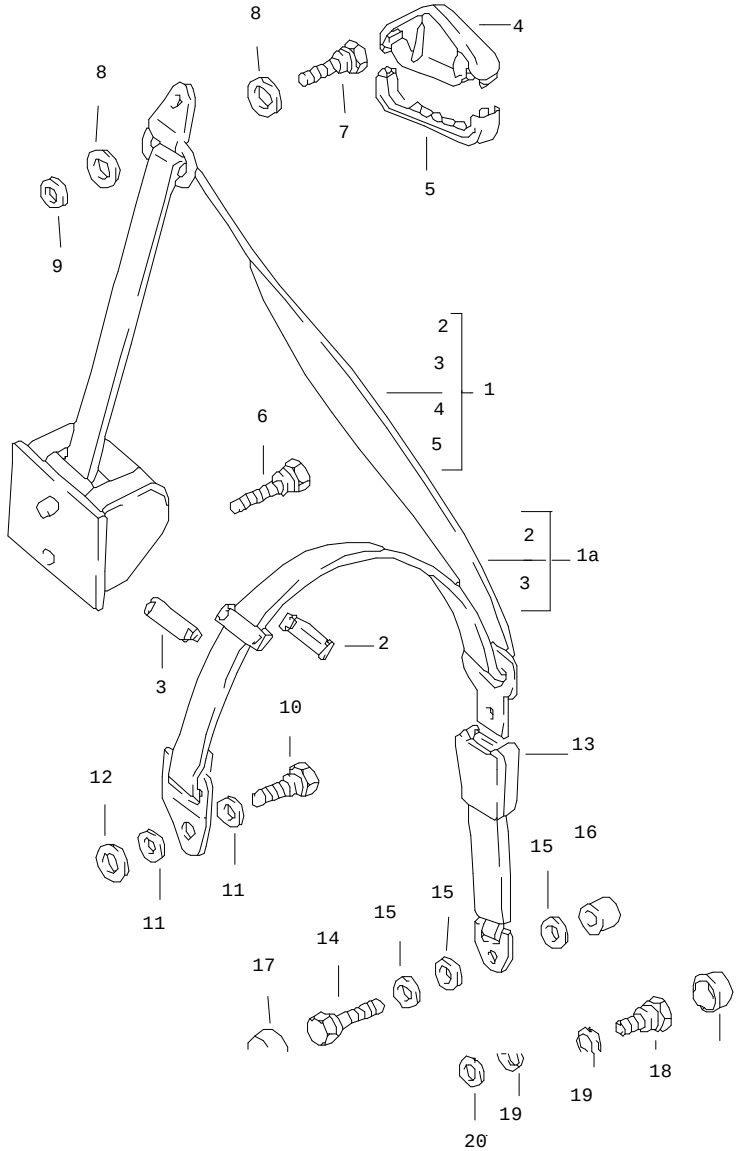

Pos	Part Number	Name	Remarks	Qty	Model
		seat belt automatic front			
(1)	928 803 126 09	seat belt		2	
1A	928 803 126 10	seat belt	86	2	
	70B	black			
2	928 803 151 02	clip upper part		2	
3	928 803 153 02	clip lower part		2	
4	928 803 141 00	cover upper part	-85	2	
5	928 803 143 00	cover lower part	-85	2	
6	928 803 121 02	fastening screw		2	
7	111 857 793 E	fastening screw		2	
8	928 803 157 02	washer	-85	4	
9	928 803 212 02	spacer		2	
10	111 857 793 E	fastening screw		2	
11	211 857 771	washer		4	
12	928 803 212 02	spacer		2	
13	928 803 183 05	seat-belt buckle	-84	2	
(13)	928 803 183 09	lock	/LL/L 85	1	
	70B	black			
(13)	928 803 183 09	lock	/RL/R 85	1	
	70B	black			
(13)	928 803 183 08	lock	/RL/L 85	1	
	70B	black			
(13)	928 803 183 08	lock	/LL/R 85	1	
	70B	black			

Pos	Part Number	Name	Remarks	Qty	Model
(13)	928 803 183 13	lock	/LL/L 86	1	
	70B	black			
(13)	928 803 183 13	lock	/RL/R 86	1	
	70B	black			
(13)	928 803 183 12	lock	/LL/R 86	1	
	70B	black			
(13)	928 803 183 12	lock	/RL/L 86	1	
	70B	black			
(13)	928 803 183 10	lock	/LL/R85-	1	M 387
	70B	black			
(13)	928 803 183 10	lock	/RL/L85-	1	M 387
	70B	black			
(13)	928 803 183 11	seat-belt buckle	/LL/L85-	1	M 383
	70B	black			
(13)	928 803 183 11	seat-belt buckle	/RL/R85-	1	M 387
	70B	black			
14	111 857 793 E	fastening screw for lock	-84	2	
15	211 857 771	washer	-84	6	
16	928 803 259 02	spacer sleeve	-84	2	
17	811 857 845	cap	-84	2	
18	914 803 468 10	screw	85-	2	
19	911 803 533 00	cup spring	85-	4	
20	911 803 531 00	paper washer	85-	2	
21	811 857 845	cap	86-	2	
		- -- E N D -- -			

Pos	Part Number	Name	Remarks	Qty	Model

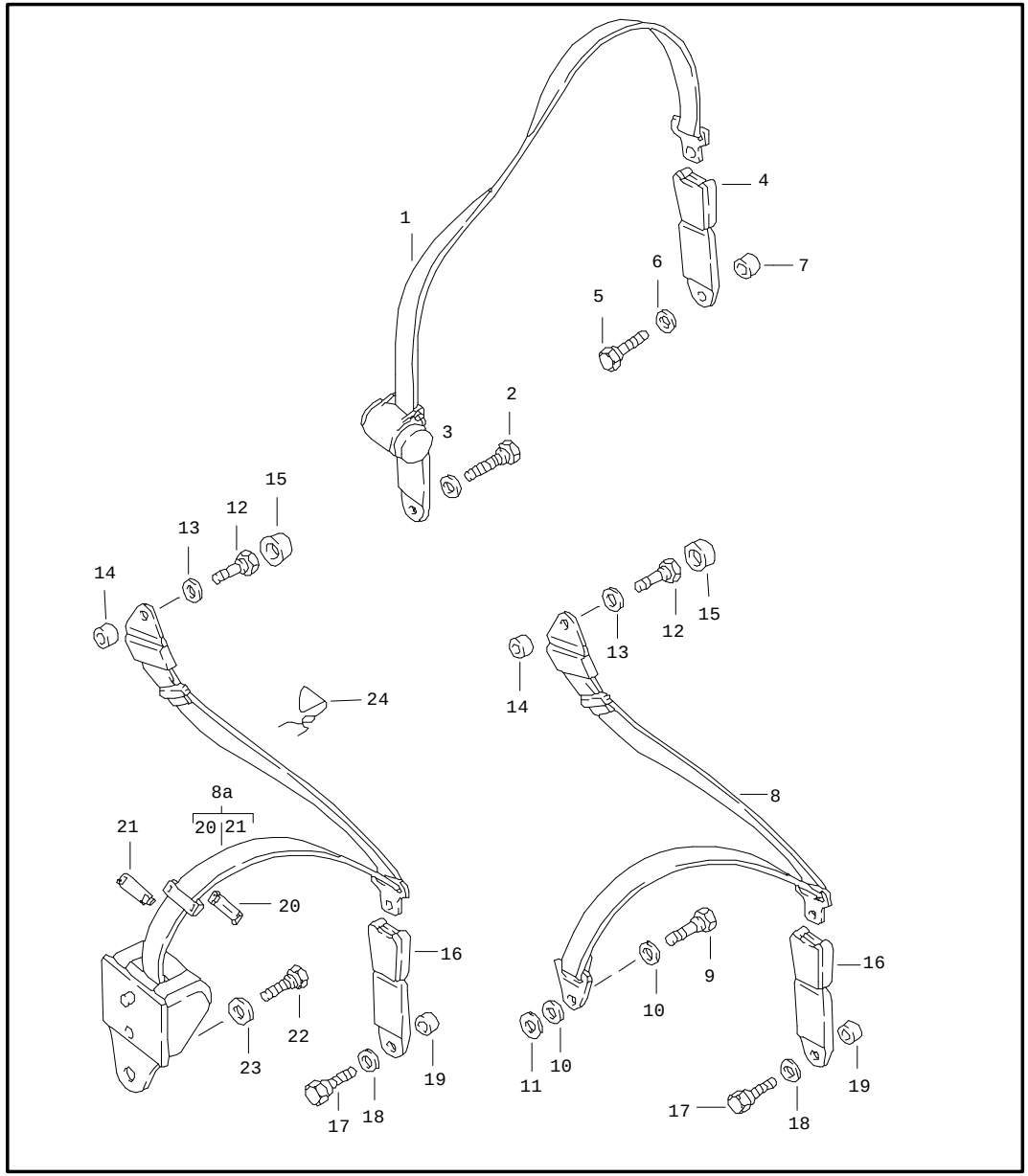

Pos	Part Number	Name	Remarks	Qty	Model
		seat belt rear			
1	928 803 015 02	lap belt automatic F >>92ES8 40621 F >>92ES8 40671		2	 (F) (GB)
(1)	E 928 803 015 04	lap belt automatic F >>92ES8 40621 F >>92ES8 40671		2	(GB) (F) (GB)
(1)	928 803 015 05	lap belt automatic F 92ES8 40622>> F 92ES8 40672>>	/L	1	(F)(GB) (F) (GB)
(1)	928 803 016 05	lap belt automatic F 92ES8 40622>> F 92ES8 40672>>	/R	1	(F)(GB) (F) (GB)
2	111 857 799 A	fastening screw		2	
3	N 011 655 2	washer 11,5 F >>92ES8 40621 F >>92ES8 40671		2	 (F) (GB)
(3)	111 857 707 A	spacer F 92ES8 40622>> F 92ES8 40672>>		2	(F)(GB) (F) (GB)
4	E 928 803 051 02	lock F >>92ES8 40621 F >>92ES8 40671	-84	2	 (F) (GB)
(4)	928 803 051 03	lock for cars with package box auxiliary air conditioner F 92ES8 40622>> F 92ES8 40672>>	84	2	(F)(GB) (F) (GB)
(4)	928 803 081 02	push-button lock F >>92ES8 40621 F >>92ES8 40671	/L	1	M 417 (F) (GB)
(4)	E 928 803 082 02	push-button lock F >>92ES8 40621 F >>92ES8 40671	/R	1	M 417 (F) (GB)

Pos	Part Number	Name	Remarks	Qty	Model
(4)	928 803 091 02	lock F 92ES8 40622>> F 92ES8 40672>>	84-	2	M 417(F)(GB) (F) (GB)
5	111 857 793 E	fastening screw		2	
6	211 857 771	washer		4	
7	928 803 259 02	spacer sleeve		2	
8	E 927 803 021 02	seat belt automatic	83	2	(AUS)
8A	927 803 021 03	seat belt automatic	/L 84-	1	(AUS)(N)(SF)
(8A)	927 803 022 03	seat belt automatic	/R 84-	1	(AUS)(N)(SF)
9	111 857 793 E	fastening screw	83	2	
10	211 857 771	washer	83	4	
11	N 011 655 2	washer		2	
12	111 857 793 E	fastening screw		2	
13	211 857 771	washer		2	
14	901 803 116 40	spacer sleeve		2	
15	811 857 845	cap		2	
16	E 928 803 051 02	lock	83 83	2	(AUS)
(16)	928 803 051 03	lock for cars with package box auxiliary air conditioner	84 84	2	(AUS)(N)(SF)
(16)	928 803 081 02	push-button lock	/L 83	1	M 417(AUS)
(16)	E 928 803 082 02	push-button lock	/R 83	1	M 417(AUS)
(16)	928 803 091 02	lock	84-	2	M 417(AUS) (N)(SF)
17	111 857 793 E	fastening screw		2	
18	211 857 771	washer		2	
19	928 803 259 02	spacer sleeve		2	
20	928 803 151 02	clip upper part	84	2	
21	928 803 153 02	clip lower part	84	2	
22	111 857 799 A	fastening screw	84-	2	
23	111 857 707 A	spacer	84-	2	
24	928 803 243 05	eye		2	(AUS)
-	928 803 903 02	lap belt	-83	1	

- -- E N D -- -

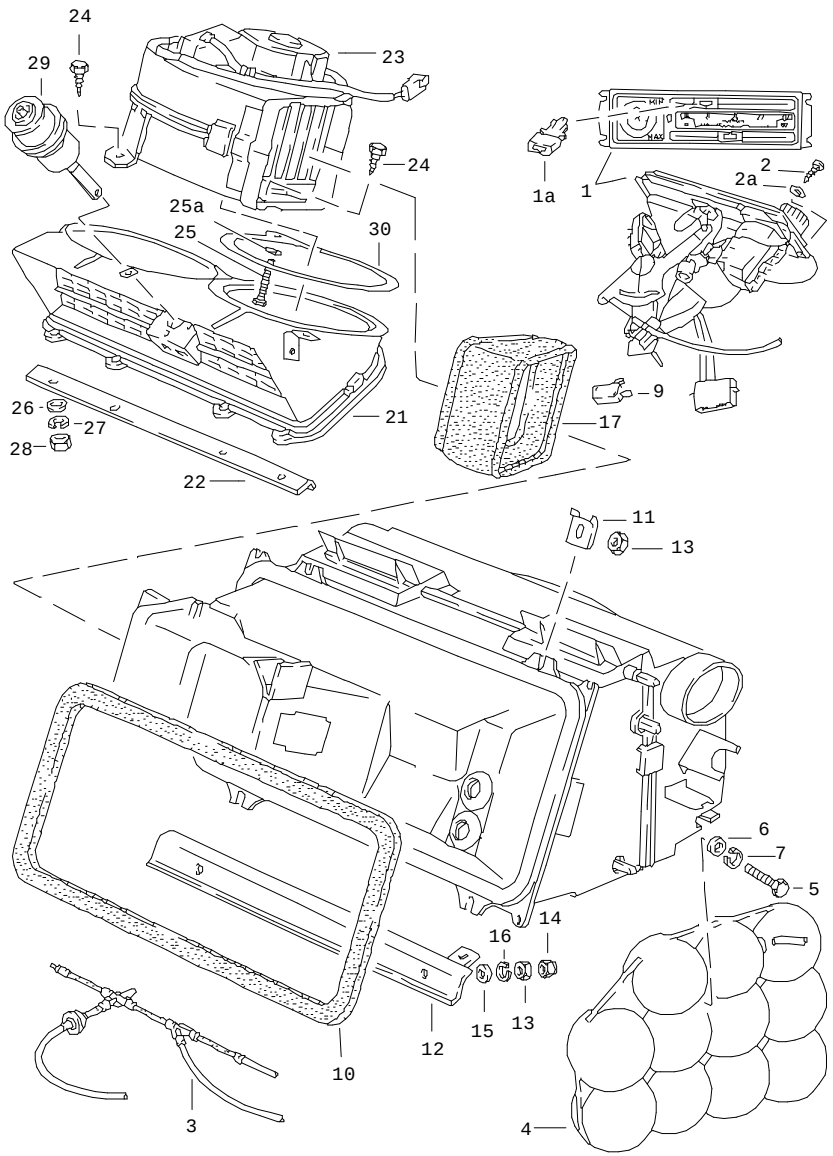

Pos	Part Number	Name	Remarks	Qty	Model
		control switch blower fan housing			
1	928 573 060 04	control switch automatic air conditioner F >>92DS8 41849 F >>92DS8 49562		1	(J)
(1)	928 573 060 08	control switch automatic air conditioner F 92DS8 41850>> F 92DS8 49563>>		1	(J)
1A	928 574 093 02	control button blower switch rotary knob see group 9/03/00 BILD 10+12		2	
2	999 919 008 07	oval-head screw 3,9 X 13		4	
2A	N 011 522 14	washer A 4,3		4	
3	928 574 710 08	vacuum line		1	
4	171 820 601	vacuum tank		1	
5	N 010 221 3	hexagon-head bolt M 6 X 35		1	
6	N 011 524 7	washer A 6,4		1	
7	N 012 006 4	lock ring B 6,4		1	
9	928 613 049 00	micro-changeover switch F >>92DS8 41849 F >>92DS8 49562		1	(J)
(9)	928 613 049 01	micro-changeover switch F 92DS8 41850>> F 92DS8 49563>>		1	(J)
10	928 574 387 02	gasket heater		1	
11	928 574 581 02	clip		2	
12	928 556 301 02	reinforcement bracket		1	

Pos	Part Number	Name	Remarks	Qty	Model
13	900 076 010 02	hexagon nut M 6		6	
14	900 070 002 02	cap nut M 6		2	
15	N 011 524 7	washer A 6,4		4	
16	N 012 006 4	lock ring B 6		6	
17	928 574 389 04	rubber		1	
21	928 573 031 05	suction housing	/LL	1	
(21)	927 573 031 03	suction housing	/RL	1	
22	928 556 303 02	reinforcement bracket		1	
23	928 574 033 05	blower	/LL	1	
23	927 574 033 04	blower	/RL	1	
24	900 187 104 02	tapping screw B 4,8 X 13		2	
25	900 187 033 02	tapping screw B 4,8 X 50		1	
25A	900 151 002 07	washer A 5,3		1	
26	N 011 524 7	washer A 6,4		4	
27	N 012 006 4	lock ring B 6		4	
28	900 076 010 02	hexagon nut M 6		4	
29	928 573 077 04	vacuum unit suction housing		1	
-	999 915 270 40	gasket 6 X 15 (BOSTIK)		*	
30	928 574 133 02	gasket		1	
		- -- E N D -- -			

Pos	Part Number	Name	Remarks	Qty	Model

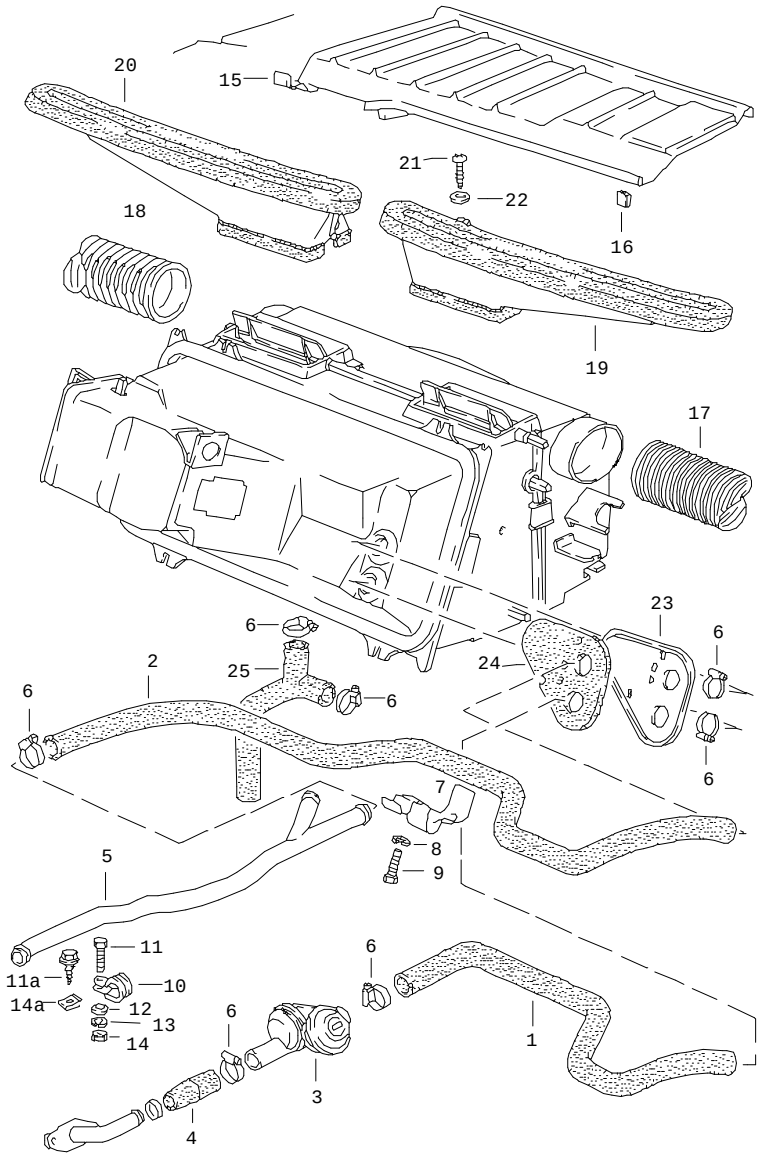

Pos	Part Number	Name	Remarks	Qty	Model
		heater hose air duct			
1	928 574 587 03	heater hose supply	/LL	1	
(1)	927 574 587 03	heater hose supply	/RL	1	
(2)	928 574 589 04	heater hose return	/LL	1	
(2)	927 574 589 03	heater hose return	/RL	1	
3	928 574 573 03	disc valve		1	
4	928 574 567 02	connecting hose	-84	1	
(4)	928 574 567 03	connecting hose	85-	1	
5	928 574 106 03	heater pipeline	/LL	1	
(5)	927 574 106 03	heater pipeline	/RL -84	1	
(5)	927 574 106 04	heater pipeline	/RL 85-	1	(AUS)
6	999 512 346 00	hose clamp		6	
7	928 574 605 02	support	/LL -83	1	
8	N 012 006 4	lock ring B 6	-83	1	
9	900 075 057 02	hexagon-head bolt M 6 X 16	-83	1	
10	999 511 066 02	clamp		1	
11	900 075 057 02	hexagon-head bolt M 6 X 16	-83	1	
11A	900 187 108 02	tapping screw BZ 6,3 X 16	84-	1	
12	N 011 524 7	washer A 6,4	-83	1	
13	N 012 006 4	lock ring B 6	-83	1	
14	900 076 010 02	hexagon nut M 6	-83	1	

Pos	Part Number	Name	Remarks	Qty	Model
14A	999 507 003 02	speed nut B 6,3 X 16	84-	1	
15	928 574 553 04	cowl panel covering	/LL	1	
(15)	927 574 553 04	cowl panel covering	/RL	1	
16	999 920 005 02	u-clamp		4	
17	928 574 626 02	flexible pipe		1	
18	928 574 625 02	flexible pipe		1	
19	928 574 631 02	defroster vent	/L	1	
20	928 574 632 02	defroster vent	/R	1	
21	900 143 031 02	oval-head sheetmetal screw B 4,2 X 9,5		4	
22	900 025 002 02	washer A 4,3		4	
23	E 928 573 065 02	cover F >>92GS8 40082 F >>92GS8 49562	/LL	1	 (J)
(23)	928 573 065 03	cover F 92GS8 40083>> F 92GS8 49563>>	/LL	1	 (J)
(23)	927 573 065 02	cover F >>92GS8 40082	/RL	1	
(23)	927 573 065 03	cover F 92GS8 40083>>	/RL	1	
24	928 573 551 02	plate F >>92GS8 40082 F >>92GS8 49562		1	 (J)
(24)	928 573 551 03	plate F 92GS8 40083>> F 92GS8 49563>>	/LL	1	 (J)
(24)	927 573 551 03	plate F 92GS8 40083>>	/RL	1	
25	928 574 583 04	water drain hose		1	
		- -- E N D -- -			

Model	Year	MG	SG	Illustration	Restrictions	Update	15:01	01.09.2004	PORSCHE	PET	PORSCHE
928	86	8	13	813-15		179					

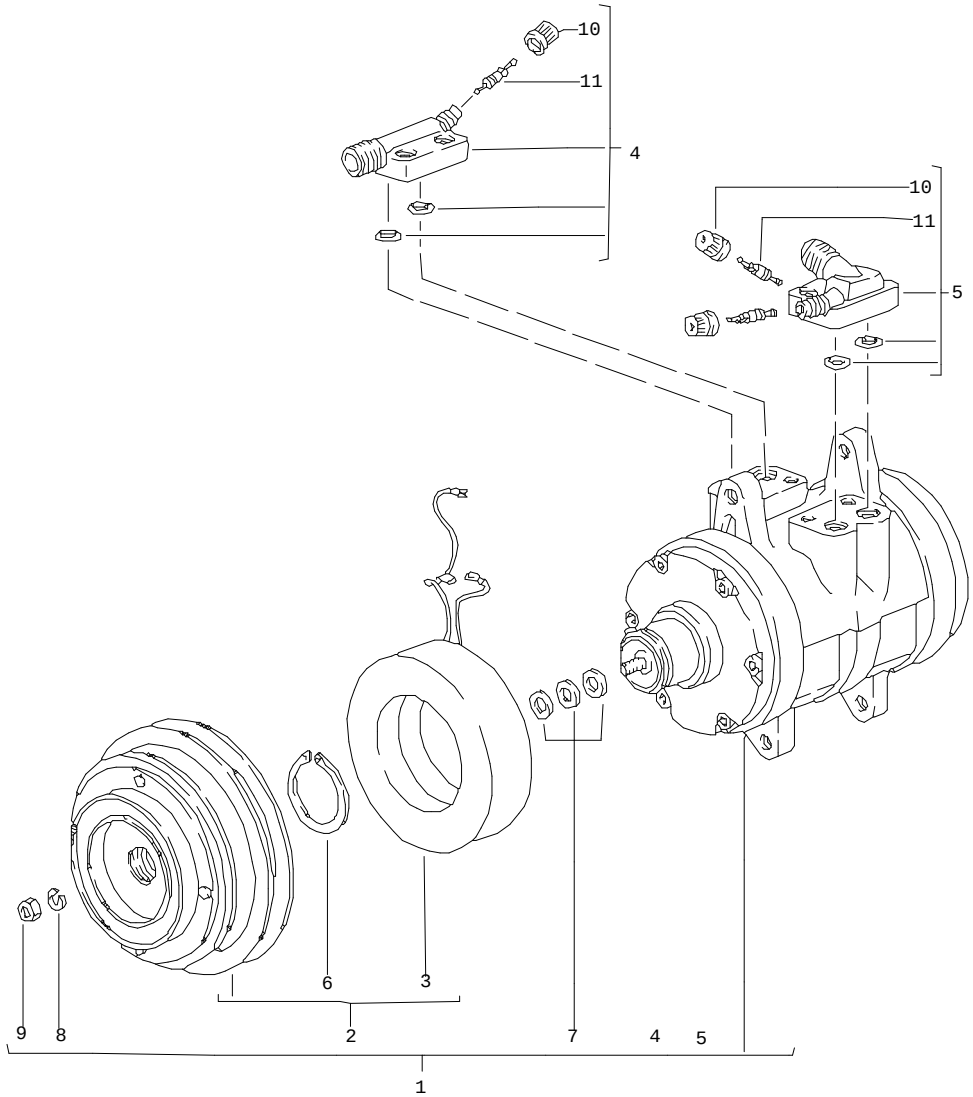

Pos	Part Number	Name	Remarks	Qty	Model
		compressor			
1	928 126 010 06	compressor		1	
2	928 126 901 00	clutch		1	
3	928 126 925 00	solenoid coil		1	
4	928 126 904 00	pressure valve		1	
5	928 126 903 00	suction valve		1	
6	477 298 843	circlip		1	
7	477 298 829	spacer 0,1 MM		X	
(7)	477 298 829 A	spacer 0,2 MM		X	
(7)	477 298 829 B	spacer 0,5 MM		X	
(7)	477 298 829 C	spacer 0,8 MM		X	
(7)	477 298 829 B	spacer 1,0 MM		X	
8	900 027 015 02	lock ring B8		1	
9	N 011 008 8	hexagon nut M8		1	
10	928 573 909 02	cap		2	
11	928 573 908 03	valve insert		2	
		- -- E N D -- -			

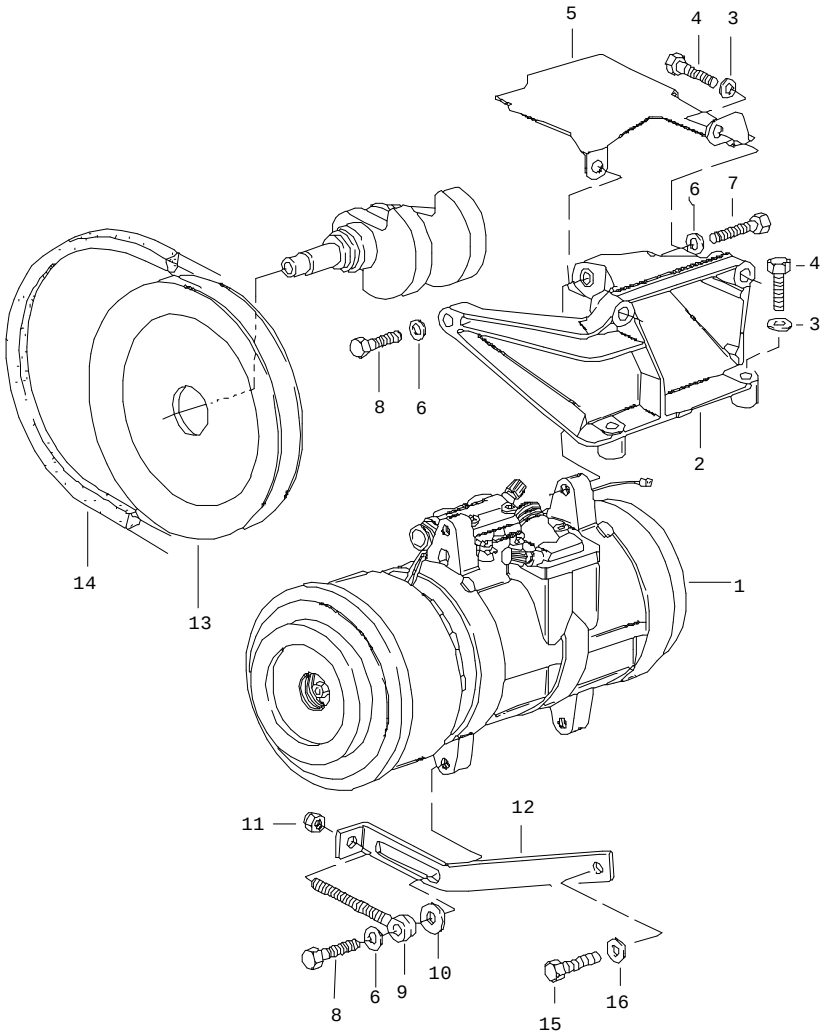

Pos	Part Number	Name	Remarks	Qty	Model
		compressor assembly			
1	928 126 010 06	compressor		1	
2	928 126 017 02	console	-85	1	
2	928 126 017 04	bracket	86	1	
3	900 025 007 02	washer A 8,4		4	
4	N 010 340 6	hexagon-head bolt M 8 X 40		4	
5	928 126 116 02	cover plate		1	
6	900 025 008 09	washer A 10,5		3	
7	900 083 059 02	hexagon-head bolt M 10 X 45		1	
8	900 083 057 02	hexagon-head bolt M 10 X 33		2	
9	999 460 003 02	eye screw		1	
10	928 101 303 00	washer		1	
11	900 084 004 02	hexagon nut M 8		1	
12	928 126 123 03	strut		1	
13	928 102 118 03	v-belt pulley		1	
14	999 192 305 50	narrow v-belt 12,5 X 1125		1	
15	N 010 233 6	hexagon-head bolt M 8 X 28		1	
16	900 025 007 02	washer A 8,4		1	
		- -- E N D -- -			

Model	Year	MG	SG	Illustration	Restrictions	Update				
928	86	8	13	813-25		179	15:02	01.09.2004	PORSCHE	PET	PORSCHE

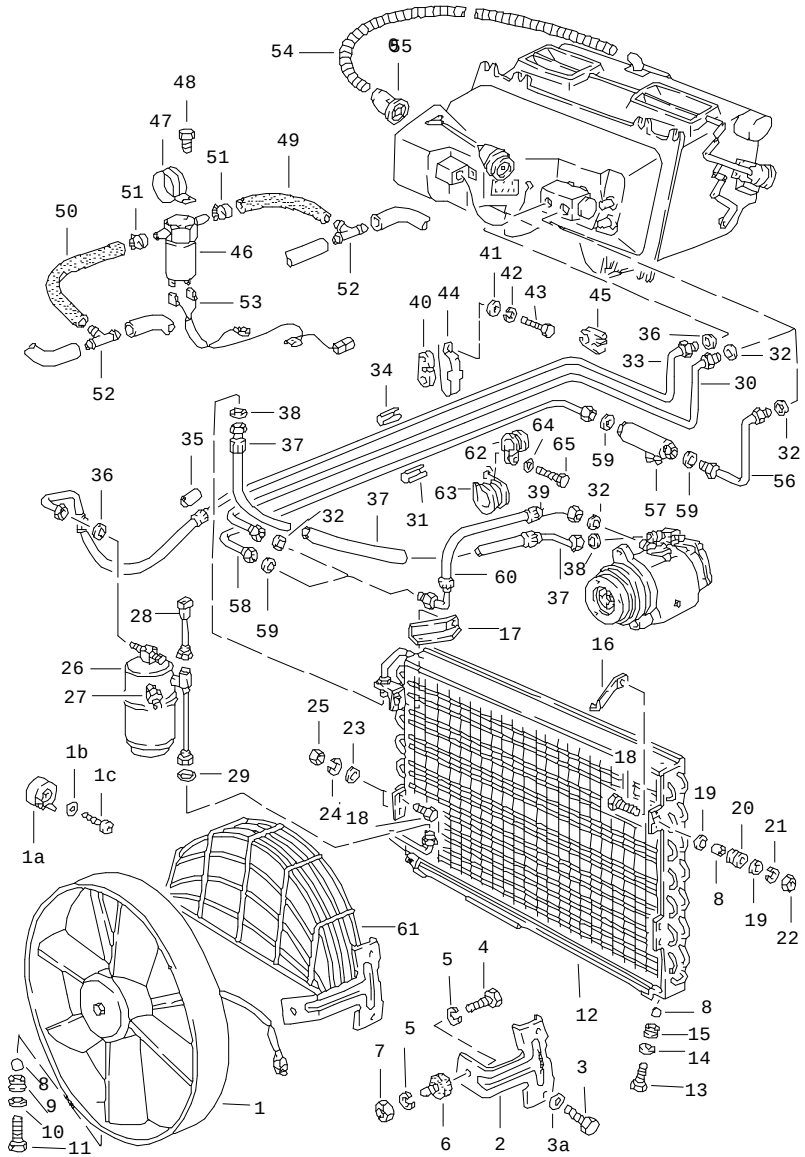

Pos	Part Number	Name	Remarks	Qty	Model
		refrigerant circuit			
1	928 624 103 01	blower		1	
1A	944 616 521 00	series resistor	85-	1	
1B	900 025 002 02	washer A 4,3	85-	1	
1C	900 143 047 07	tapping screw B 4,2 X 19	85-	1	
2	928 573 345 02	support	-84	2	
3	999 217 023 02	hexagon-head bolt M 5 X 12		2	
3A	N 012 005 3	lock ring A 5		2	
4	999 217 021 02	hexagon-head bolt M 6 X 8		2	
5	N 012 006 4	lock ring B 6		4	
6	999 703 310 00	rubber buffer		2	
7	900 076 010 02	hexagon nut M 6		2 1	
8	928 573 347 02	spacer tube		5	
9	999 702 125 50	rubber sleeve		1	
10	900 151 002 07	washer A 5,3		1	
11	999 217 024 02	hexagon-head bolt M 5 X 16		1	
12	928 573 143 03	condenser		1	
13	999 217 025 02	hexagon-head bolt M 6 X 20		2	
14	900 151 003 02	washer A 6,4		2	
15	999 702 046 50	rubber sleeve		2	
16	928 573 089 02	retaining bracket		1	
17	928 573 090 02	retaining bracket		1	

Pos	Part Number	Name	Remarks	Qty	Model
18	999 217 022 02	hexagon-head bolt M 6 X 16		4	
19	N 011 524 7	washer A 6,4		6	
20	999 702 046 50	rubber sleeve		4	
21	N 012 006 4	lock ring A 6		4	
22	900 076 010 02	hexagon nut M 6		4	
23	N 011 524 7	washer A 6,4		6	
24	N 012 006 4	lock ring B 6		2	
25	900 076 010 02	hexagon nut M 6		2	
26	A 928 573 941 03	desiccator		1	
26	928 573 941 03	desiccator		1	
27	959 613 137 00	low pressure switch		1	
-	900 174 011 40	o-ring 8 X 28 low pressure switch		1	
28	928 613 131 01	thermostat		1	
29	999 701 619 40	o-ring		1	
30	E 928 573 091 03	intake pipe NW 13	/LL -83	1	
(30)	927 573 091 04	intake pipe NW 13	/RL -83	1	
31	928 573 573 02	intake pipe NW 13	-83	2	
32	999 707 251 40	o-ring 14,0 X 1,8		1	
33	928 573 093 03	pressure line NW 8	/LL -83	1	
(33)	928 573 093 05	pressure line NW 8 F >>92FS8 40676 F >>92FS8 49562	/LL 84-	1	(J)
(33)	928 099 573 13	pressure line NW 8 F 92FS8 40677>> F 92FS8 49563>> F >>92GS8 40082 F >>92GS8 40206 F >>92GS8 49562	/LL /LL /RL	1	(J)
(33)	928 573 093 06	pressure line NW 8 F 92GS8 40083>> F 92GS8 40207>> F 92GS8 49563>>	/LL /LL /RL	1	(J)
(33)	927 573 093 04	pressure line NW 8	/RL -83	1	
(33)	E 927 573 093 06	pressure line NW 8 F >>92FS8 40676	/RL 84-	1	
(33)	928 099 573 14	pressure line NW 8 F 92FS8 40677>> F >>92GS8 40082 F >>92GS8 40206 F >>92GS8 49562	/RL /LL /RL	1	(J)
(33)	927 573 093 07	pressure line NW 8 F 92GS8 40083>> F 92GS8 40207>> F 92GS8 49563>>	/RL /LL /RL	1	(J)
34	928 573 571 02	pressure line NW 8		1	
35	928 573 615 02	hose D = 20		1	
36	999 707 247 40	o-ring 7,5 X 1,8		2	
37	928 573 097 07	hose line NW 10		1	
38	999 707 250 40	o-ring 10,6 X 1,8		2	

Pos	Part Number	Name	Remarks	Qty	Model
39	928 573 098 03	hose line NW 13	-83	1	
40	928 573 645 03	spacer rubber	/LL	1	
		F >>92GS8 40082	/LL		
		F >>92GS8 40206	/RL		
		F >>92GS8 49562			(J)
(40)	927 573 645 03	spacer rubber	/RL	1	
		F >>92GS8 40082	/LL		
		F >>92GS8 40206	/RL		
		F >>92GS8 49562			(J)
41	W N 011 524 7	washer A 6,4		2	
42	N 012 006 4	lock ring B 6		1	
		F >>92GS8 40082	/LL		
		F >>92GS8 40206	/RL		
		F >>92GS8 49562			(J)
43	900 075 162 02	hexagon-head bolt M 6 X 16		1	
		F >>92GS8 40082	/LL		
		F >>92GS8 40206	/RL		
		F >>92GS8 49562			(J)
44	928 574 603 04	clip	-83	1	
44	928 574 603 04	clip	84-	1	
		F >>92GS8 40082	/LL		
		F >>92GS8 40206	/RL		
		F >>92GS8 49562			(J)
45	E 928 573 575 02	clamping piece		1	
		POS. 46-53 together with k-jetronic see group 1/07/10	-83		
		together with l-jetronic see group 1/07/25			(J)
		together with lh-jetronic see group 1/07/11	84-		
54	928 573 357 02	hose 850 MM		1	
55	928 573 355 02	intake socket with fuel cooler		1	
56	928 099 573 00	intake pipe	-83	1	
(56)	928 573 092 02	intake pipe NW 13	/LL 84-	1	
		F >>92GS8 40082	/LL		
		F >>92GS8 40206	/RL		
		F >>92GS8 49562			(J)
(56)	928 573 092 03	intake pipe NW 13	/LL	1	
		F 92GS8 40083>>	/LL		
		F 92GS8 40207>>	/RL		
		F 92GS8 49563>>			(J)
(56)	927 573 092 02	intake pipe NW 13	/RL 84-	1	
		F >>92GS8 40082	/LL		
		F >>92GS8 40206	/RL		
		F >>92GS8 49562			(J)
(56)	927 573 092 03	intake pipe NW 13	/RL	1	
		F 92GS8 40083>>	/LL		
		F 92GS8 40207>>	/RL		
		F 92GS8 49563>>			(J)
(57)	928 099 573 01	fuel cooler	-83	1	
57	928 573 063 03	fuel cooler NW 13	84-	1	
58	928 573 091 05	intake pipe	-83	1	
(58)	928 573 091 06	intake pipe NW 16	84-	1	
		F >>92GS8 40082	/LL		
		F >>92GS8 40206	/RL		
		F >>92GS8 49562			(J)
(58)	928 573 091 07	intake pipe NW 16		1	
		F 92GS8 40083>>	/LL		
		F 92GS8 40207>>	/RL		
		F 92GS8 49563>>			(J)
59	999 707 252 40	o-ring		3	
60	928 573 098 04	hose line		1	

Pos	Part Number	Name	Remarks	Qty	Model
61	928 624 345 00	grille for blower	85-	1	
62	999 511 116 02	clamp F 92GS8 40083>> F 92GS8 40207>> F 92GS8 49563>>	 /LL /RL	1	 (J)
63	999 511 066 02	clamp F 92GS8 40083>> F 92GS8 40207>> F 92GS8 49563>>	 /LL /RL	1	 (J)
64	N 012 006 4	lock ring B 6 F 92GS8 40083>> F 92GS8 40207>> F 92GS8 49563>>	 /LL /RL	1	 (J)
65	900 075 014 02	hexagon-head bolt M 6 X 18 F 92GS8 40083>> F 92GS8 40207>> F 92GS8 49563>>	 /LL /RL	1	 (J)
		- -- E N D -- -			

Pos	Part Number	Name	Remarks	Qty	Model

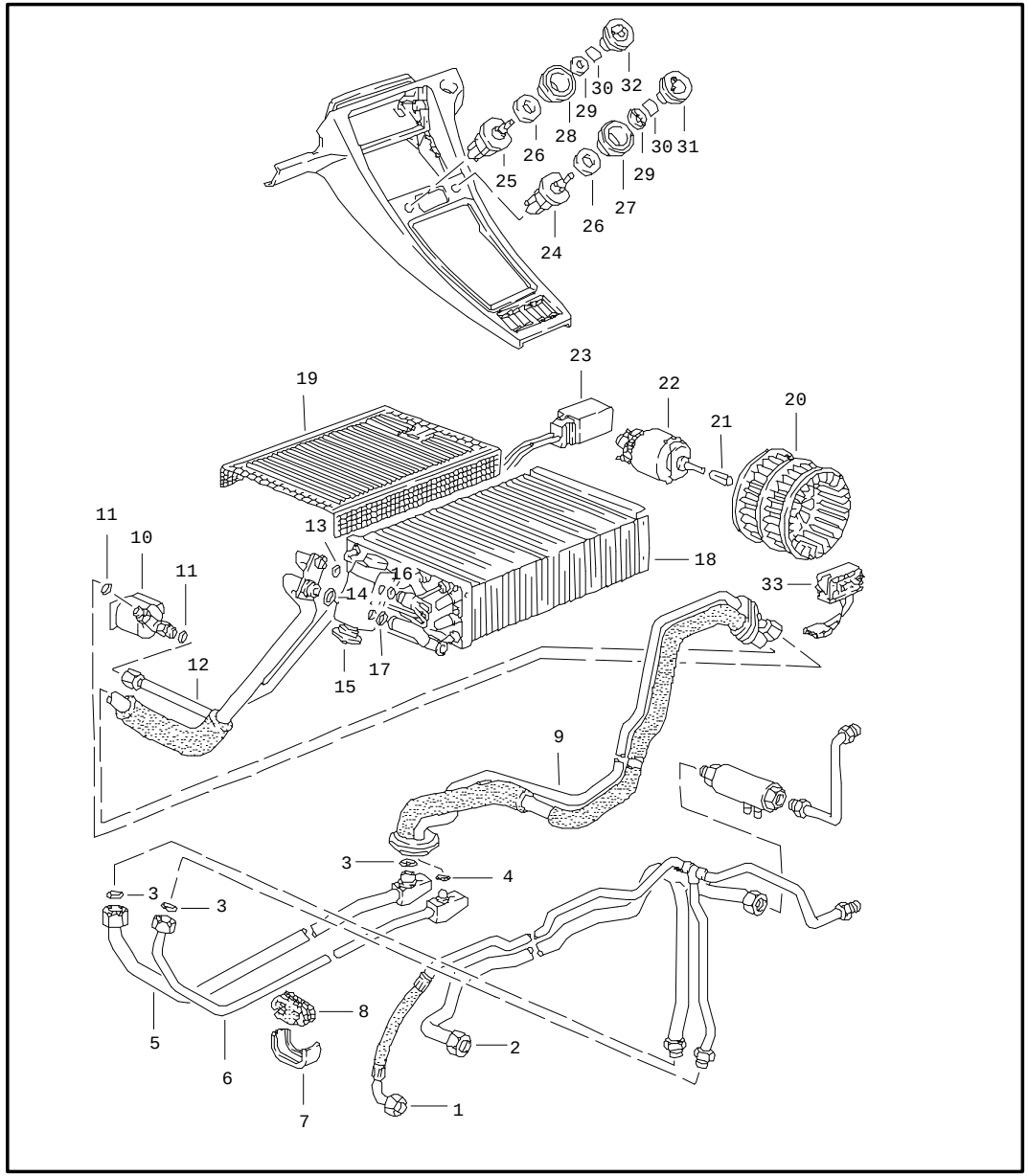

Pos	Part Number	Name	Remarks	Qty	Model
		lines	85-		
		auxiliary air conditioner			M 570
1	928 570 093 01	pressure line	/LL	1	
		NW 8			
		F >>92FS8 40676			
		F >>92FS8 49562			(J)
(1)	928 099 573 15	pressure line	/LL	1	
		NW 8			
		F 92FS8 40677>>			
		F 92FS8 49563>>			(J)
		F >>92GS8 40082	/LL		
		F >>92GS8 40206	/RL		
		F >>92GS8 49562			(J)
(1)	928 570 093 02	pressure line	/LL	1	
		NW 8			
		F 92GS8 40083>>	/LL		
		F 92GS8 40207>>	/RL		
		F 92GS8 49563>>			(J)
(1)	927 570 093 01	pressure line	/RL	1	
		NW 8			
		F >>92FS8 40676			
(1)	928 099 573 16	pressure line	/RL	1	
		NW 8			
		F 92FS8 40677>>			
		F >>92GS8 40082	/LL		
		F >>92GS8 40206	/RL		
		F >>92GS8 49562			(J)
(1)	927 570 093 02	pressure line	/RL	1	
		NW 8			
		F 92GS8 40083>>	/LL		
		F 92GS8 40207>>	/RL		
		F 92GS8 49563>>			(J)
2	928 570 091 01	intake pipe		1	
		NW 16			
		F >>92GS8 40082	/LL		
		F >>92GS8 40206	/RL		
		F >>92GS8 49562			(J)
2	928 570 091 01	intake pipe		1	
		NW 16			
		F 92GS8 40083>>	/LL		
		F 92GS8 40207>>	/RL		
		F 92GS8 49563>>			(J)
3	999 707 251 40	o-ring		3	
4	999 707 247 40	o-ring		1	

Pos	Part Number	Name	Remarks	Qty	Model
5	928 570 101 00	refrigerant line NW 13		1	
6	928 570 103 00	refrigerant line NW 8		1	
7	928 570 453 00	support		2	
8	928 570 455 00	rubber mounting		2	
9	928 570 105 00	harness	-85	1	
(9)	928 570 105 01	refrigerant line	86	1	
10	928 615 201 01	solenoid valve		1	
11	999 707 284 40	o-ring		2	
12	928 570 109 00	refrigerant line	-85	1	
(12)	928 570 109 03	refrigerant line	86	1	
13	999 707 247 40	o-ring		1	
14	999 707 251 40	o-ring		1	
15	928 573 123 05	expansion valve		1	
16	999 707 250 40	o-ring		1	
17	999 707 251 40	o-ring		1	
18	928 570 211 00	evaporator		1	
19	928 570 291 00	grille		1	
20	928 570 212 00	impeller		1	
21	928 570 295 00	bush		1	
22	928 624 117 00	blower motor		1	
23	928 618 041 00	control unit		1	
-	928 612 222 00	wiring harness control unit	85	1	
-	928 612 222 01	wiring harness control unit	86	1	
-	928 612 221 00	wiring harness connection point centre console	85	1	
-	928 612 221 01	wiring harness connection point centre console	86	1	
24	928 613 153 00	potentiometer		1	
25	911 613 243 00	blower switch		1	
26	928 613 171 00	spacer		2	
27	928 613 178 00	rose for leatherette	/R	1	
(27)	928 613 178 01	rose for leather	/R	1	
28	928 613 177 00	rose for leatherette	/L	1	
(28)	928 613 177 01	rose for leather	/L	1	
29	911 613 119 02	rose		2	
30	928 613 219 00	spring clip		2	
31	928 613 154 01	knob	/R	1	
32	928 613 155 01	knob	/L	1	
-	928 570 425 00	water drain hose	85	1	
-	928 570 425 01	water drain hose	86	1	
33	928 618 137 00	series resistor		1	

- -- E N D -- -

Model	Year	MG	SG	Illustration	Restrictions	Update	15:02	01.09.2004	PORSCHE	PET	PORSCHE
928	86	8	13	813-30		179					

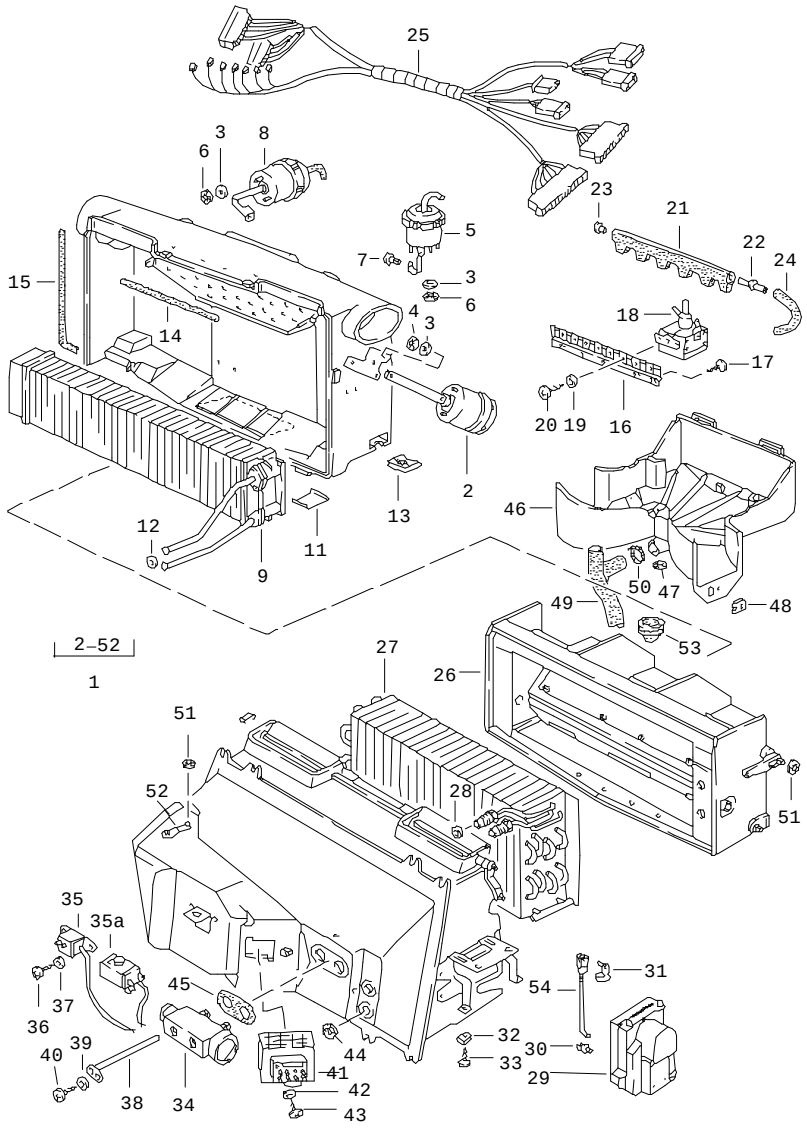

Pos	Part Number	Name	Remarks	Qty	Model
		air conditioner			
1	928 573 036 03	air conditioner automatic F >>92DS8 41849 F >>92DS8 49562	/LL	1	(J)
(1)	928 573 036 04	air conditioner automatic F 92DS8 41850>>92GS8 40082 F 92DS8 49563>>92GS8 49562	/LL	1	(J)
(1)	928 573 036 05	air conditioner automatic F 92GS8 40083>> F 92GS8 49563>>	/LL	1	(J)
(1) E	927 573 036 03	air conditioner automatic F >>92DS8 41860	/RL	1	
(1)	927 573 036 04	air conditioner automatic F 92DS8 41861>>92GS8 40082	/RL	1	
(1)	927 573 036 05	air conditioner automatic F 92GS8 40083>>	/RL	1	
2	928 574 077 02	vacuum unit defroster vent		1	
3	928 574 465 02	rubber washer		9	
4	999 507 243 02	kronen-fix		6	
5	928 574 079 06	vacuum unit footwell		1	
6	999 507 247 02	mecano-speed-fix		6	
7	928 574 735 02	bolt		1	
8	928 573 309 03	vacuum unit centre nozzle		1	
9	928 574 047 02	heat exchanger	/LL	1	
(9)	927 574 047 02	heat exchanger	/RL	1	
11	928 574 423 02	clamp		8	
12	999 701 615 40	o-ring		2	

Pos	Part Number	Name	Remarks	Qty	Model
13	E 999 591 368 02	speed nut 4,2		2	
-	999 911 214 50	sealing cord		*	
14	-	152 MM		1	
15	-	800 MM		1	
16	928 573 693 04	support		1	
17	900 143 031 02	oval-head sheetmetal screw B 4,2 X 9,5		3	
18	928 573 691 02	solenoid valve	/LL	6	
18	928 573 692 02	change-over valve	/RL	6	
19	900 025 001 02	washer A 3,2		6	
20	N 013 932 1	tapping screw B 2,9 X 6,5		6	
21	928 573 695 02	connection F >>92DS8 41849 F >>92DS8 49562		1	 (J)
(21)	928 573 695 03	connection F 92DS8 41850>> F 92DS8 49563>>		1	 (J)
22	928 574 689 02	connecting piece		4	
23	928 574 721 02	plug		2	
24	928 574 717 02	hose		6	
25	928 612 921 01	wiring harness F >>92DS8 41849 F >>92DS8 49562		1	 (J)
(25)	928 612 921 03	wiring harness F 92DS8 41850>> F 92DS8 49563>>		1	 (J)
26	E 928 573 038 03	housing F >>92DS8 41849	/LL	1	
(26)	E 927 573 038 03	housing F >>92DS8 41849	/RL	1	
27	E 928 573 013 02	evaporator F >>92GS8 40082 F >>92GS8 49562	/LL	1	 (J)
(27)	928 573 013 04	evaporator F 92GS8 40083>> F 92GS8 49563>>	/LL	1	 (J)
(27)	927 573 013 02	evaporator F >>92GS8 40082	/RL	1	
(27)	927 573 013 04	evaporator F 92GS8 40083>>	/RL	1	
28	999 701 620 40	o-ring F >>92GS8 40082 F >>92GS8 49562	-85	2	 (J)
(28)	999 707 251 40	o-ring F 92GS8 40083>> F 92GS8 49563>>	86	1	 (J)
(28)	999 707 250 40	o-ring F 92GS8 40083>> F 92GS8 49563>>	86	1	 (J)
29	928 573 150 03	control mechanism F >>92DS8 41849 F >>92DS8 49562		1	 (J)
(29)	928 624 129 00	control mechanism F 92DS8 41850>> F 92DS8 49563>>		1	 (J)
30	993 531 563 00	linkage clip		1	
31	999 166 050 02	bolt		1	
32	999 507 037 02	speed nut 4,2		2	
33	900 143 121 07	tapping screw B 4,2 X 16		2	
34	928 573 123 02	expansion valve F >>92GS8 40082 F >>92GS8 49562		1	 (J)
(34)	928 573 123 05	expansion valve F 92GS8 40083>> F 92GS8 49563>>		1	 (J)

Pos	Part Number	Name	Remarks	Qty	Model
35	A 928 613 135 00	temperature switch F >>92DS8 40066 F >>92DS8 49561		1	 (J)
35A	928 613 133 00	temperature switch		1	
-	928 613 163 00	adapter for temperature switch 928.613.133.00 F >>92DS8 40066 F >>92DS8 49561 use also:		1	 (J)
36	900 075 145 02	hexagon-head bolt M 5 X 16 F >>92DS8 40066 F >>92DS8 49561		2	 (J)
37	N 012 222 4	spring washer B 5 F >>92DS8 40066 F >>92DS8 49561		2	 (J)
38	928 573 581 02	capillary tube		1	
39	900 028 006 01	washer A 3		1	
40	N 013 953 2	tapping screw B 2,9 X 9,5		1	
41	928 618 101 01	thermo bi-metal switch		1	
42	N 012 224 3	spring washer A 4		2	
43	900 146 025 02	screw M 4 X 18		2	
44	928 574 383 02	grommet		2	
45	928 573 383 03	grommet		1	
46	928 574 027 02	housing		1	
47	999 507 244 02	kronen-fix		1	
48	999 507 020 02	speed nut 4,2		1	
49	928 574 583 04	water drain hose		1	
-	928 423 523 00	spacer sleeve		1	
50	999 513 001 40	tie-wrap		1	
51	999 591 425 03	mecano-speed-fix		2	
52	928 574 397 02	lever		1	
53	928 573 531 02	grommet		1	
-	928 573 299 02	plastic foam strip		2	
-	999 513 025 40	tie-wrap 9,5 X 211		2	
54	928 573 313 02	gear shift rod		1	

- -- E N D -- -

Model	Year	MG	SG	Illustration	Restrictions	Update		
928	86	8	98	REP		179	15:31	01.09.2004

Pos	Part Number	Name	Remarks	Qty	Model
		repair kits			
>>	> 928 799 537 13	set of locks		1	
>>	> 928 799 537 15	set of locks		1	M 533
		comprising:			
		steering outer tube		1	
		steering lock		1	
		door lock cylinder		2	
		lid lock			
		fuel tank cap		1	
		with lock cylinder			
		glove compartment lock		1	
		lock cylinder			
		key		3	
		when required order also:			
		key lamp			
		see group			
		8/04/05 POS.59			
>>	> 928 559 075 02	stone guard film	/L	1	
		1 set			
>>	> 928 559 076 02	stone guard film	/R	1	
		1 set			
		- -- E N D -- -			

Model	Year	MG	SG	Illustration	Restrictions	Update				
928	86	9	01	901-00		179	15:02	01.09.2004	PORSCHE	PET	PORSCHE

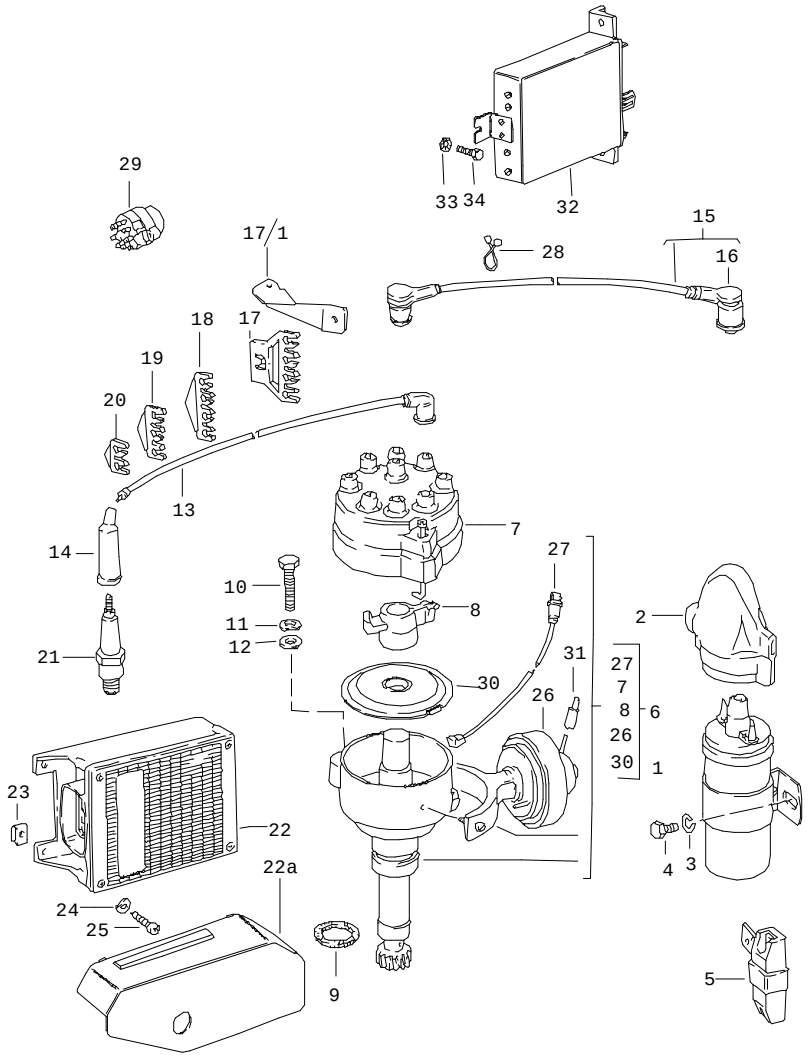

Pos	Part Number	Name	Remarks	Qty	Model
		engine electric. equipment k-jetronic l-jetronic	 83 -84		 M28.11/12 M28.20 (J)
1	928 602 503 00	ignition coil		1	
2	928 602 801 00	cap		1	
3	E 900 028 004 01	spring washer B 8		2	
4	N 014 712 3	pan-head screw M 8 X 18		2	
5	E 046 905 109	series resistor green OHM 0,4		1	
(5)	E 046 905 109 A	series resistor red 0,6 OHM		1	
(6)	928 602 032 07	distributor		1	M28.20 (J)
6	928 602 033 00	distributor		1	M28.11/12
7	928 602 902 00	distributor cap		1	
8	928 602 904 05	rotor (ZV.928 602 033 00)		1	
8	928 602 904 03	rotor (ZV.928 602 032 07)		1	M28.20 (J)
9	928 602 103 00	sealing ring		1	
10	N 010 335 5	hexagon-head bolt M 8 X 35		1	
11	N 012 229 3	spring washer B 8		1	
12	900 089 006 02	washer		1	
13	928 609 061 00	ignition lead cylinder 1		1	
(13)	928 609 061 01	ignition lead cylinder 2		1	
(13)	928 609 061 02	ignition lead cyl. 3		1	

Pos	Part Number	Name	Remarks	Qty	Model
(13)	928 609 061 03	ignition lead cyl. 4		1	
(13)	928 609 061 05	ignition lead ZYL. 5/6		1	
(13)	928 609 061 06	ignition lead cyl. 7		1	
(13)	928 609 061 08	ignition lead cyl. 8		1	
14	928 609 105 03	ignition cable socket		8	
15	928 609 061 07	ignition lead		1	
16	477 035 281	screened connector		1	
17	928 609 139 03	support		1	
17A	928 609 140 01	support right		1	
18	928 609 139 02	pipe holder		2	
19	928 609 139 01	pipe holder triple		2	
20	928 609 139 00	pipe holder		2	
(21)	999 170 156 90	spark plug BOSCH WR 7 DC		8	M28.11/12
21	999 170 062 90	spark plug BOSCH WR 8 DS		8	M28.20 (J)
22	928 602 702 02	tsz switch unit		1	
22A	928 612 871 02	cover ignition switch unit		1	
23	999 591 348 02	speed nut B 4,8		3	
24	N 012 222 4	spring washer B 5		3	
25	900 143 046 02	tapping screw B 4,8 X 16		3	
-	113 142 261 A	clip		1	
26	928 602 915 01	vacuum timing unit f.ignition distributor 928.602.033.00		1	M28.11/12
26	928 602 915 06	vacuum timing unit (ZV 928 602 032 07)		1	M28.20 (J)
27	928 602 907 00	cable		1	
28	999 651 161 40	cable tie		1	
29	964 613 012 00	ignition starter switch steering lock see group 4/03/05		1	
(30)	E 928 602 913 00	dust cover f.ignition distributor		1	
31	911 110 297 00	plug vacuum unit		1	(AUS)(S)
32	928 618 106 01	lambda control unit l-jetronic oxygen sensor		1	(J)
33	N 012 226 5	spring washer B 6	-84	3	(J)
34	900 075 057 02	hexagon-head bolt M 6 X 16	-84	3	(J)
-	911 606 108 00	timing mark sender		1	M28.20 (J)
		- -- E N D -- -			

Model	Year	MG	SG	Illustration	Restrictions	Update				
928	86	9	01	901-01		179	15:03	01.09.2004	PORSCHE	PET	PORSCHE

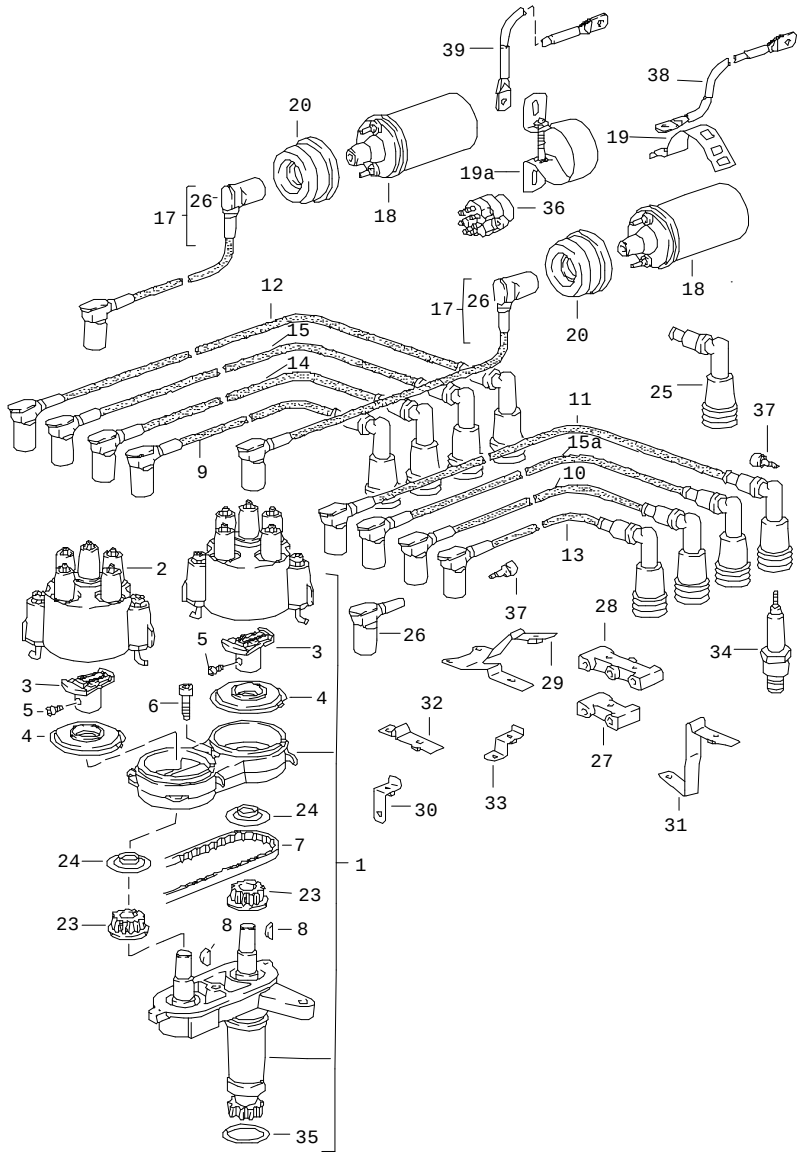

Pos	Part Number	Name	Remarks	Qty	Model
		engine electric. equipment lh-jetronic	84-		M28.21/22
1	928 602 011 02	distributor		1	
2	944 602 251 00	distributor cap		2	
3	944 602 906 01	rotor		2	
4	928 602 547 00	protection cap		2	
5	999 218 007 02	pan-head screw M 4 X 6		2	
6	N 014 725 2	pan-head screw M 8 X 25		1	
7	928 602 541 00	toothed belt		1	
8	900 117 038 00	key A 5 X 3 X 12		2	
9	928 602 060 11	ignition lead cylinder 1	84-	1	
10	928 602 060 12	ignition lead cylinder 2	84-	1	
11	928 602 060 13	ignition lead cyl. 3	84-	1	
12	928 602 060 14	ignition lead cyl. 4	84-	1	
13	928 602 060 15	ignition lead cylinder 5	84-	1	
14	928 602 060 16	ignition lead cyl. 6	84-	1	
15	928 602 060 17	ignition lead cyl. 7	84-	1	
15A	928 602 060 18	ignition lead cyl. 8	84-	1	
16	928 602 063 00	ignition lead	/L 84-	1	
17	928 602 064 00	ignition lead	/R 84-	1	
-	999 602 001 00	ignition lead		*	
18	944 602 115 00	ignition coil		2	

Pos	Part Number	Name	Remarks	Qty	Model
19A	944 602 117 00	clamp		1	
19	928 602 511 00	clamping bow		1	
20	927 602 801 00	protection cap		2	
23	928 602 539 01	pulley		2	
24	928 602 540 00	flange washer		2	
25	928 609 105 03	ignition cable socket		8	
26	944 609 133 00	distributor plug for distributor cap		10	
(26)	944 609 131 00	ignition coil plug		1	
27	911 609 593 00	cable holder	84	X	
28	911 609 591 00	cable holder	84	X	
29	928 602 091 00	support		1	
30	928 602 097 00	support		1	
31	928 602 081 00	support		1	
32	928 602 093 00	support	84	X	
33	928 602 095 00	support		1	
34	999 170 156 90	spark plug BOSCH WR 7 DC		8	
35	928 602 103 00	sealing ring		1	
36	964 613 012 00	ignition starter switch		1	
-	928 613 223 00	retainer spring for ignition starter switch	85-	1	
37	911 609 310 00	cable screw		20	
38	928 612 819 00	ground cable	/L 85-	1	
39	928 612 814 00	ground cable	/R 85-	1	
		- -- E N D -- -			

Pos	Part Number	Name	Remarks	Qty	Model

Model	Year	MG	SG	Illustration	Restrictions	Update	15:03	01.09.2004	PORSCHE	PET	PORSCHE
928	86	9	01	901-02		179					

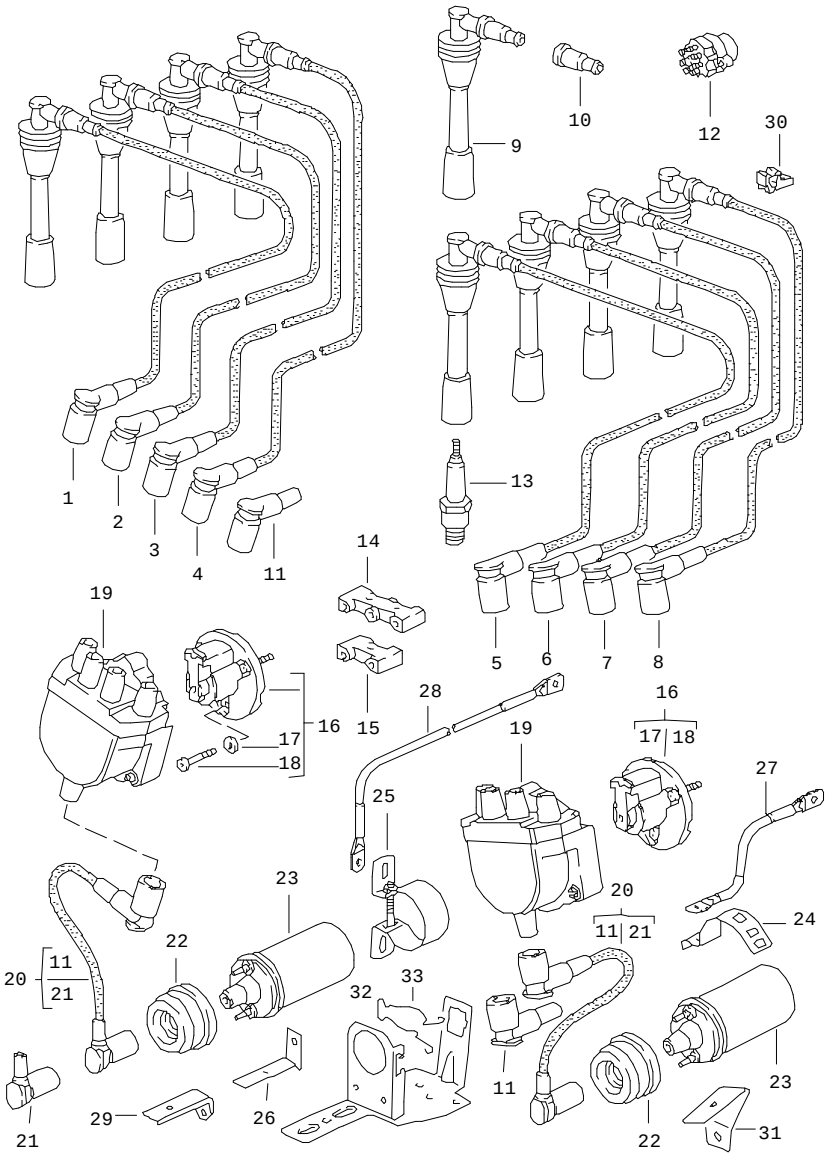

Pos	Part Number	Name	Remarks	Qty	Model
		engine electric. equipment	85 85 86		M28.43/44 M28.44 (J) M28.45/46
1	928 602 060 01	ignition lead cylinder 1		1	
2	928 602 060 02	ignition lead cylinder 2		1	
3	928 602 060 03	ignition lead cyl. 3		1	
4	928 602 060 04	ignition lead cyl. 4		1	
5	E 928 602 060 05	ignition lead cylinder 5		1	
6	928 602 060 06	ignition lead cyl. 6		1	
7	928 602 060 07	ignition lead cyl. 7		1	
8	928 602 060 08	ignition lead cyl. 8		1	
9	928 602 311 00	spark plug socket		8	
10	999 659 001 40	protective cap		8	
11	928 602 557 00	suppressor cap		10	
12	964 613 012 00	ignition starter switch		1	
-	928 613 223 00	retainer spring for ignition starter switch		1	
13	999 170 156 90	spark plug WR 7DC		8	
14	911 609 591 00	cable holder		X	
15	911 609 593 00	cable holder		X	
6	928 602 213 01	rotor M >> 81G 00068 M >> 81G 05077		2	 M28.43 M28.44

Pos	Part Number	Name	Remarks	Qty	Model
(16)	928 602 213 00	rotor M 81G 00069 >> M 81G 05078 >>		2	 M28.43 M28.44 M28.45/46
17	N 012 005 3	lock ring		6	
18	928 602 223 00	screw		6	
19	928 602 211 01	distributor cap		2	
20	928 602 039 00	ignition lead		2	
21	928 602 131 00	ignition coil plug		2	
22	927 602 801 00	protection cap		2	
23	944 602 115 00	ignition coil		2	
24	928 602 511 00	clamping bow		1	
25	944 602 117 00	clamp		1	
26	928 602 051 02	support bracket fan		1	
27	928 612 819 00	ground cable	/L	1	
28	928 612 814 00	ground cable	/R	1	
29	928 602 051 00	support thermostat housing		1	
30	928 602 559 00	support		8	
31	928 602 051 05	support water pump		1	
32	928 607 051 02	support data link connector		1	
33	928 607 553 01	clip		1	
		- -- E N D -- -			

Pos	Part Number	Name	Remarks	Qty	Model

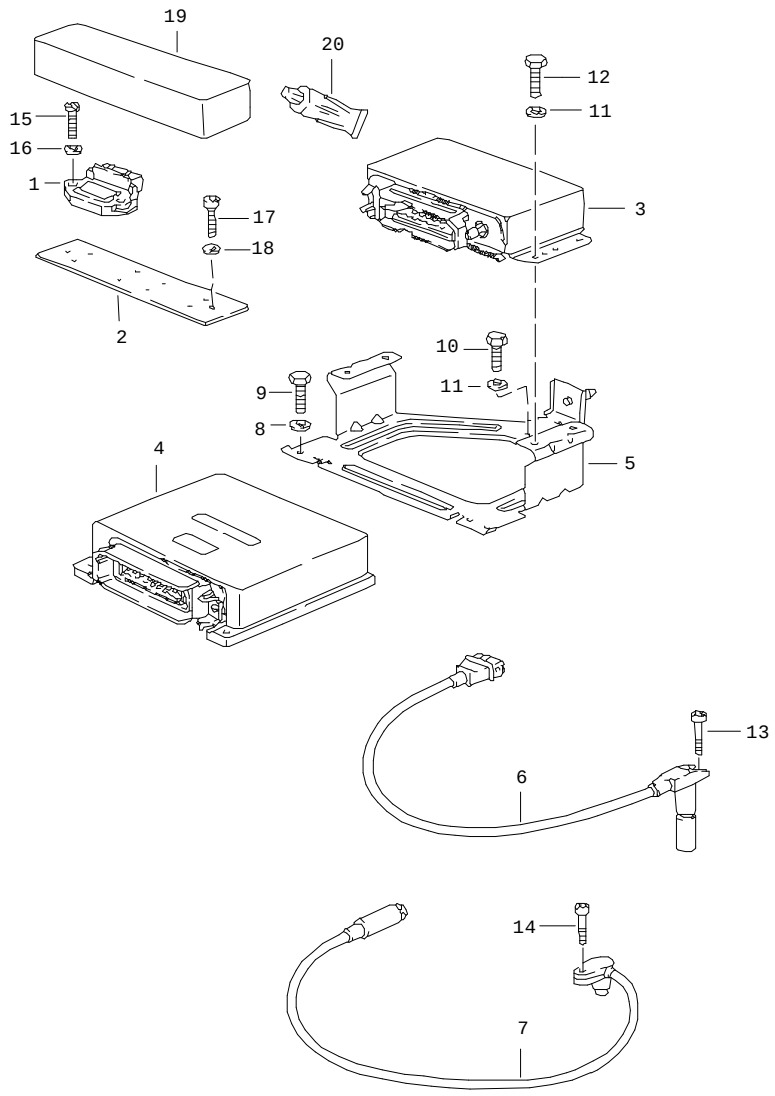

Pos	Part Number	Name	Remarks	Qty	Model
		engine electric. equipment lh-jetronic	84 85 85 86		M28.21/22 M28.43/44 M28.44 (J) 28.45/46
1	928 602 706 01	ignition switch unit		2	
2	928 602 716 00	heat dissipator		1	
3	928 618 124 03	ignition control unit		1	M28.21/22
(3)	928 618 124 04	ignition control unit		1	M28.21/22 M 154
(3)	928 618 124 05	ignition control unit	85-	1	M28.43/44
(3)	928 618 124 06	ignition control unit	86	1	M28.45/46
4	> 928 618 123 02	control unit lh-jetronic		1	M28.21/22
(4)	> 928 618 123 04	control unit lh-jetronic	85 86 86	1	M28.43/44 M28.45/46
5	928 618 010 00	bracket		1	
6	944 606 115 00	pulse sender		1	
7	911 606 108 00	timing mark sender		1	
8	N 011 524 7	washer A 6,6		2	
9	N 010 210 13	hexagon-head bolt M 6 X 10		2	
10	900 075 145 02	hexagon-head bolt M 5 X 15		1	
11	900 025 003 02	washer A 5,3		5	
12	N 010 205 6	hexagon-head bolt M 5 X 10		4	
13	999 218 005 02	pan-head screw M 6 X 16		1	
14	900 067 089 02	pan-head screw M 6 X 25		1	

Pos	Part Number	Name	Remarks	Qty	Model	Pos	Part Number	Name	Remarks	Qty	Model
15	900 075 260 02	hexagon-head bolt M 6 X 15		4							
16	N 011 524 7	washer A 6,4		4							
17	900 075 260 02	hexagon-head bolt M 6 X 15		2							
18	N 011 524 7	washer A 6,4		2							
19	928 602 707 00	cover		1							
20	999 915 031 00	sealing compound CURIL K 2 1 tube 100 g		X							
		mounting parts									
		timing mark sender									
-	N 011 524 7	washer A 6,4		1							
-	999 072 005 09	hexagon-head bolt M 6 X 12		1							
-	999 511 142 02	clamp 17 X 15		1							
		sensor ignition point									
-	477 971 851	cable clip		1							
-	N 020 904 4	tie-wrap		1							
		- -- E N D -- -									

Model	Year	MG	SG	Illustration	Restrictions	Update	15:03	01.09.2004	PORSCHE	PET	PORSCHE
928	86	9	01	901-05		179					

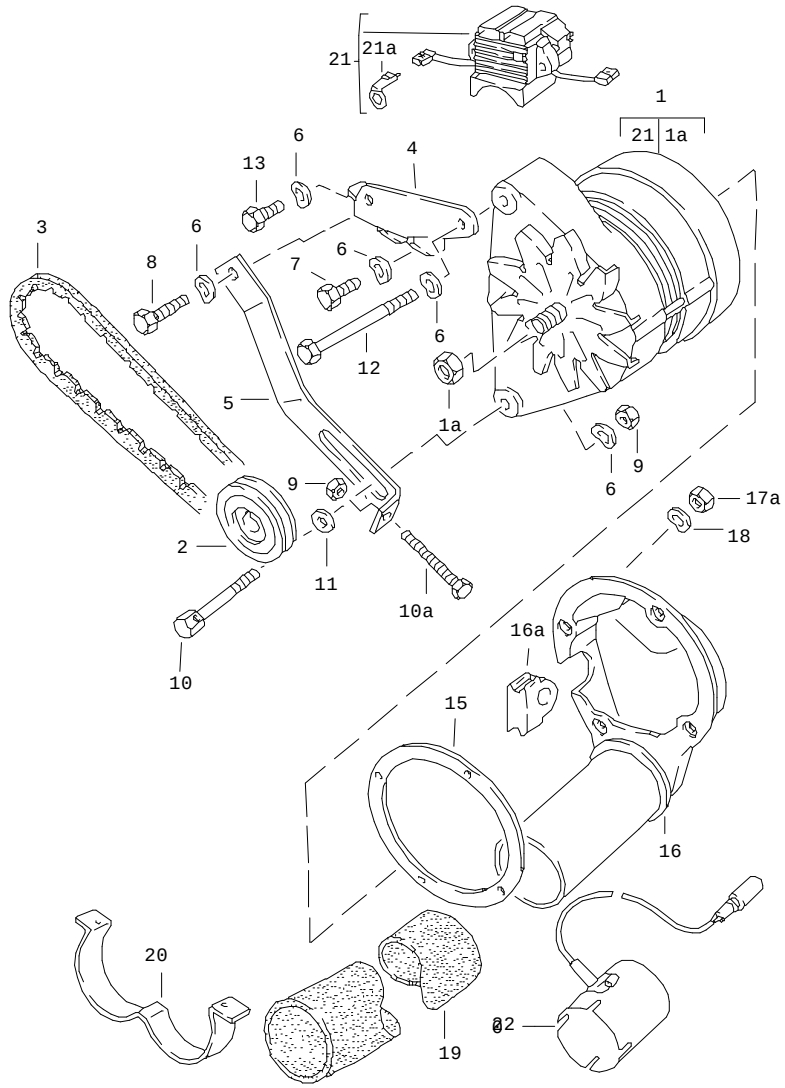

Pos	Part Number	Name	Remarks	Qty	Model
		generator	-83 -84 84		M28.11/12 M28.19/20 M28.21/22
(1) >	928 603 114 01	generator	-84	1	
1A *	928 603 904 00	set of fastening parts 1 set	-83	X	
2	928 603 145 02	pulley	-83	1	
(2)	928 603 145 03	pulley	84	1	
3	999 192 214 50	poly-rib belt K4 858 only together with pulley 928 603 145 02	-83	1	
(3)	999 192 259 50	poly-rib belt K5 886 only together with pulley 928 603 145 03	84	1	
4	928 101 041 03	support		1	
5	928 101 402 07	tension shackle		1	
6	900 025 007 02	washer		5	
7	900 075 085 02	hexagon-head bolt M 8 X 20		1	
8	900 075 029 09	hexagon-head bolt M 8 X 25		1	
9	900 076 025 02	hexagon nut M 8		2	
10	928 101 403 00	hexagon-head bolt M 8 X 75		1	
10A E	N 010 274 1	hexagon-head bolt		1	
11	900 223 001 02	washer - 8,4 -		1	
12	900 074 050 02	hexagon-head bolt M 8 X 120		1	
13	N 010 239 11	hexagon-head bolt M 8 X 18		1	

Pos	Part Number	Name	Remarks	Qty	Model
15	928 603 135 02	sealing ring		1	
16	928 603 133 04	ventilation element		1	
16A	928 612 865 02	hose piece		1	
17A	N 011 005 14	hexagon nut M 5		4	
18	900 025 003 02	washer		8	
19	928 603 143 01	flexible pipe 320 MM		1	
(19)	928 603 143 04	flexible pipe 900 MM		1	
-	928 603 365 00	protective edging		3	
-	999 512 349 02	hose clamp		2	
-	999 513 023 40	tie-wrap		1	
20	928 603 139 00	holder		1	
21	911 603 913 01	electronic regulator		1	
21A	911 603 911 00	push-on connector only together with 928 603 913 01 928 603 114 00		1	
22	928 659 021 01	outer sensor automatic air conditioner		1	
-	928 603 910 00	diode plate for 928 603 114 00 928 603 114 01		1	
		- -- E N D -- -			

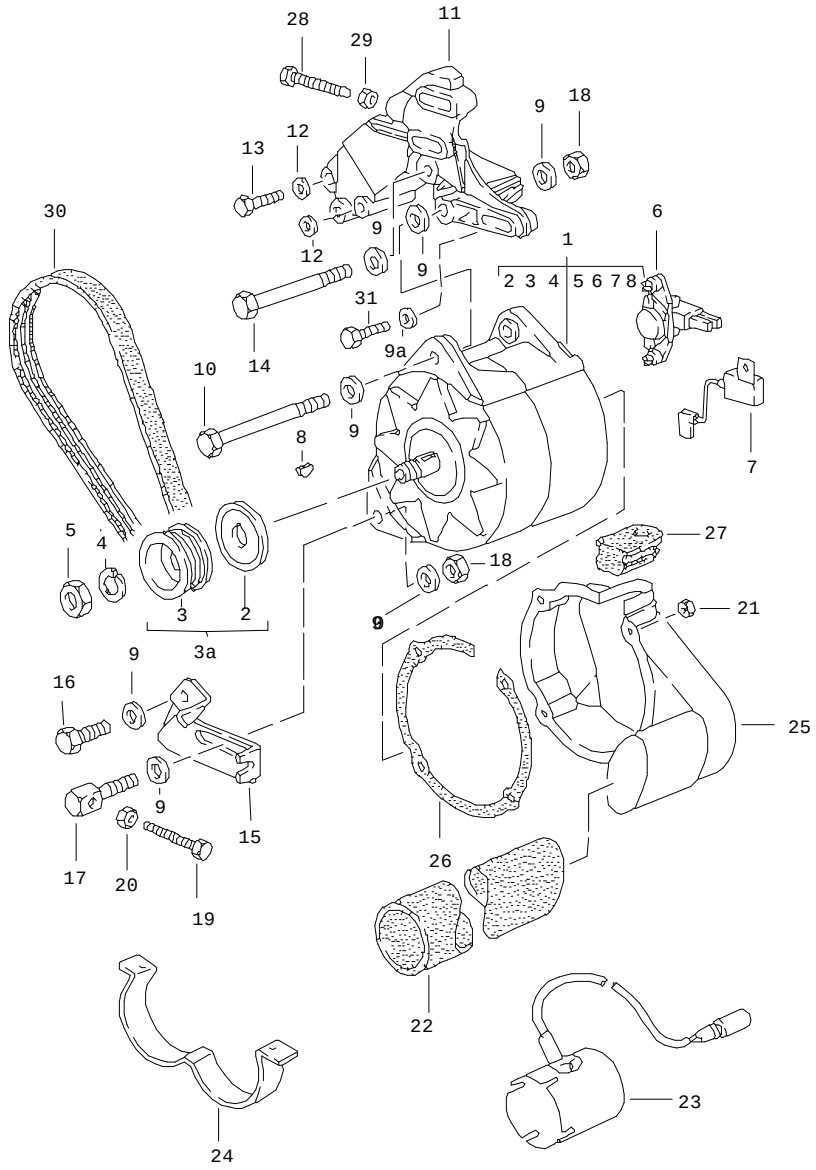

Pos	Part Number	Name	Remarks	Qty	Model
		generator	85 85 86		M28.21/22 M28.43/44 M28.45/46
1	> 928 603 011 01	generator		1	M28.21 M28.22 M28.43 M28.44 M28.45/46
3A	928 603 021 01	pulley with support washer		1	
4	928 603 611 00	retainer	85	1	
(4)	N 012 016 1	lock ring	86	1	
5	900 034 013 02	hexagon nut M 16 X 1,5		1	
6	944 603 141 01	regulator		1	
7	944 603 143 00	condenser		1	
8	928 603 903 00	woodruff key		1	
9	900 025 008 09	washer A 10,5		7	
9A	928 101 302 00	washer A 8,4		3	
10	N 010 494 4	hexagon-head bolt M 10 X 125 M >> 82G 00071 M >> 82G 05066 M >> 81G 00141 M >> 81G 05282		1	 M28.21 M28.22 M28.43 M28.44
(10)	900 074 197 02	hexagon-head bolt M 10 X 130 M 82G 00072 >> M 82G 05067 >> M 81G 00142 >> M 81G 05283 >>		1	 M28.21 M28.22 M28.43/44 M28.45/46
(11)	928 101 123 02	support		1	M28.21 M28.22 M28.43/44 M28.45/46

Pos	Part Number	Name	Remarks	Qty	Model
12	900 025 007 02	washer A 8,4		2	
13	N 010 335 5	hexagon-head bolt M 8 X 35		1	
14	N 010 500 3	hexagon-head bolt M 10 X 110 M >> 82G 00071 M >> 82G 05066 M >> 81G 00141 M >> 81G 05282		1	 M28.21 M28.22 M28.43 M28.44
(14)	900 074 197 02	hexagon-head bolt M 10 X 130 M 82G 00072 >> M 82G 05067 >> M 81G 00142 >> M 81G 05283 >>		1	 M28.21 M28.22 M28.43 M28.44 M28.45/46
15	928 101 127 00	support		1	
16	900 075 041 09	hexagon-head bolt M 10 X 25		1	
17	928 101 129 00	threaded bolt		1	
18	900 910 031 09	lock nut VM 10		2	
19	N 010 248 1	hexagon-head bolt M 8 X 60		1	
20	900 076 025 02	hexagon nut M 8		1	
21	N 011 005 14	hexagon nut M 5		4	
22	928 603 143 01	flexible pipe 320 MM		1	
(22)	928 603 143 04	flexible pipe 900 MM		1	
-	928 603 365 00	protective edging		1	
23	928 659 021 01	outer sensor automatic air conditioner		1	
24	928 603 139 00	holder		1	
25	928 603 133 07	ventilation element		1	
26	928 603 135 03	sealing ring		1	
27	928 612 865 03	hose piece		1	
28	N 010 361 4	hexagon-head bolt M 8 X 65		1	
29	900 076 025 02	hexagon nut M 8		1	
30	999 192 266 50	poly-rib belt K 6 - 858 - LW		1	
31	N 010 353 3	hexagon-head bolt M 8 X 42		3	
		- -- E N D -- -			

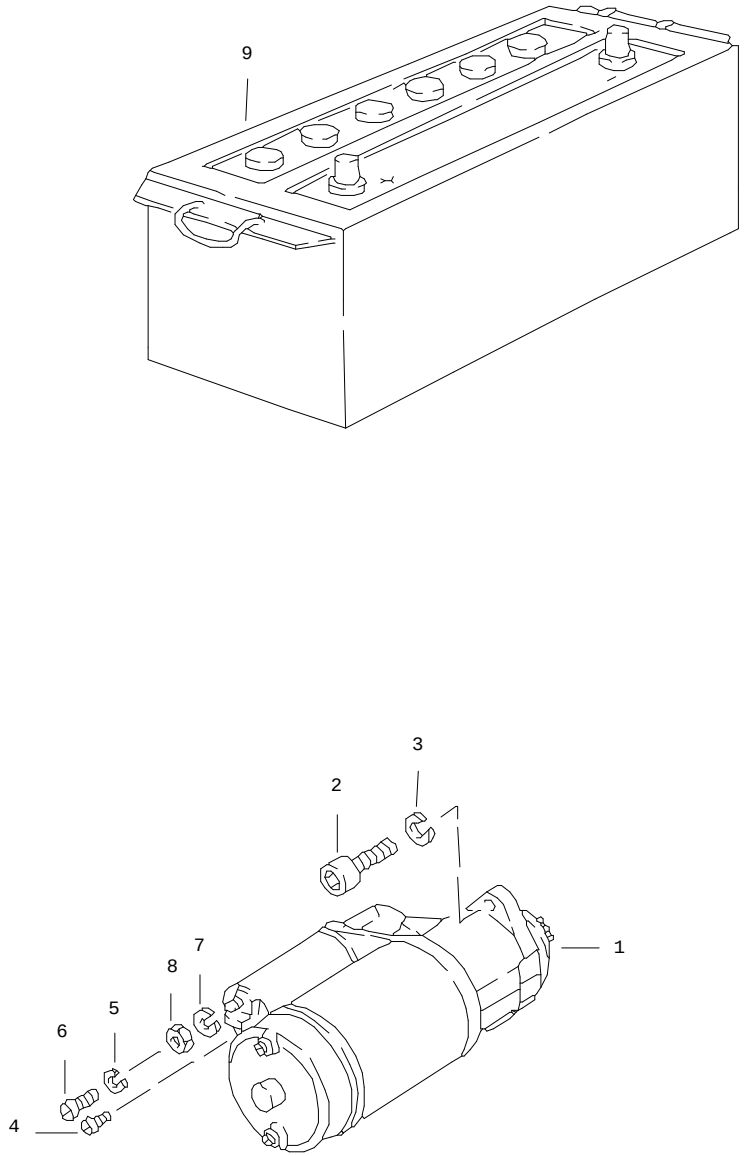

Pos	Part Number	Name	Remarks	Qty	Model
		starter battery			
1	> 928 604 103 04	starter 1,5 KW		1	
2	900 067 124 02	pan-head screw M 10 X 35		2	
3	900 027 016 02	lock ring B 10		2	
4	900 075 275 02	pan-head screw AM 4 X 8		1	
5	N 012 005 3	lock ring A 5		1	
6	900 075 276 02	pan-head screw AM 5 X 6		1	
7	900 027 015 02	lock ring A 8		1	
8	900 076 025 02	hexagon nut M 8		1	
(9)	999 611 088 20	battery 12V - 88 AH		1	
(9)	928 611 173 02	battery 12V - 72 AH	86	1 1	
-	999 611 104 00	pole covering battery		1	
		mounting parts battery			
-	928 611 209 02	clamp		1	
-	999 075 032 02	hexagon-head bolt M 8 X 20	-85	1	
-	N 014 725 2	pan-head screw M 8 X 25	86	1	
-	900 025 007 02	washer A 8,4	86	1	
		- -- E N D -- -			

Model	Year	MG	SG	Illustration	Restrictions	Update				
928	86	9	02	902-05		179	15:04	01.09.2004	PORSCHE	PET	PORSCHE

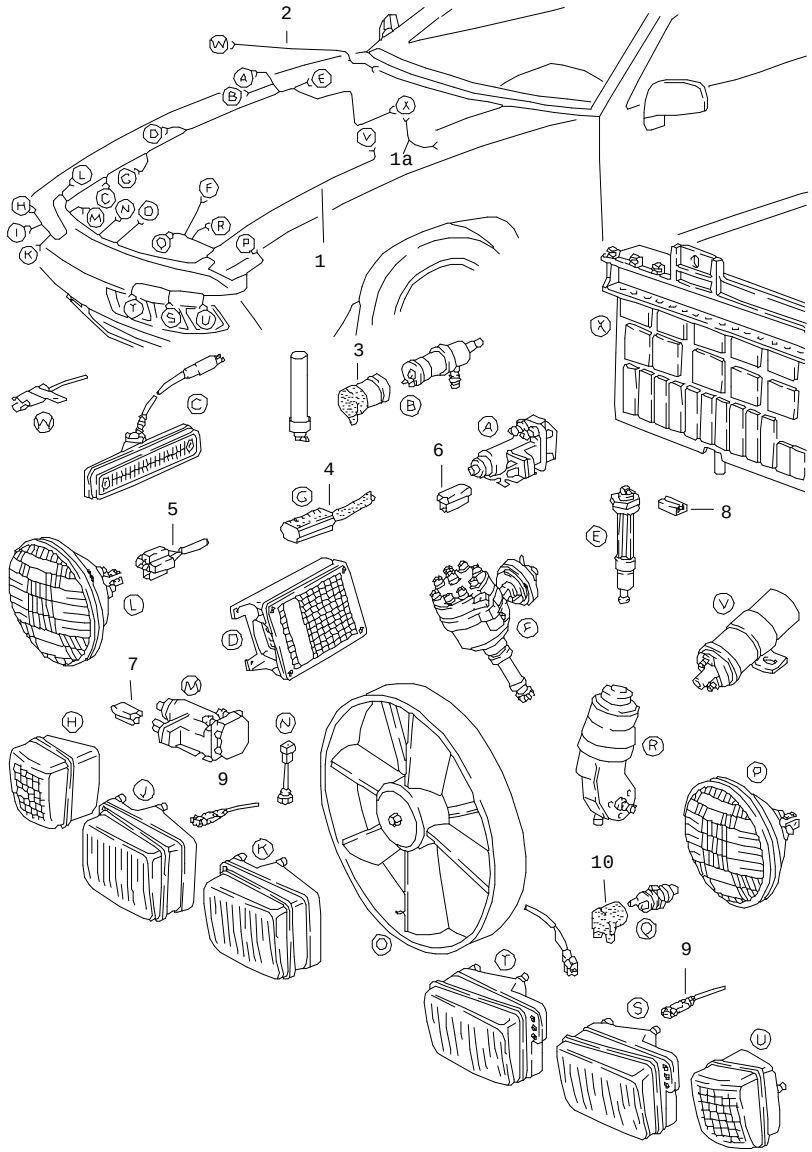

Pos	Part Number	Name	Remarks	Qty	Model
		wiring harness front trunk			
1	928 612 001 06	wiring harness	/LL -83	1	
(1)	928 612 001 08	wiring harness	/LL 84	1	
(1)	928 612 001 13	wiring harness	/LL 85	1	
(1)	928 612 001 19	wiring harness see technical information 9-NR.1/86	/LL 86	1	
(1)	927 612 001 00	wiring harness	/RL -83	1	
(1)	927 612 001 01	wiring harness	/RL 84	1	
(1)	927 612 001 02	wiring harness	/RL 85	1	
(1)	927 612 001 04	wiring harness see technical information 9-NR.1/86	/RL 86	1	
(1)	E 928 612 001 07	wiring harness	-83	1	(J)
(1)	928 612 001 11	wiring harness	84	1	(J)
(1)	928 612 001 13	wiring harness	85	1	(J)
(1)	928 612 001 19	wiring harness see technical information 9-NR.1/86	86	1	(J)
(1)	928 612 001 12	wiring harness	84	1	M 215
(1)	928 612 001 21	wiring harness F >>92FS8 40666	85	1	M 215
(1)	928 612 001 13	wiring harness F 92FS8 40667>>	85	1	M 215
(1)	928 612 001 19	wiring harness see technical information 9-NR.1/86	86	1	M 215
1A	928 612 033 00	adapter	85-	1	M28.43/44
(1A)	928 612 033 00	adapter	85-	1	M28.43/44(J)
(1A)	928 612 033 00	adapter F 92FS8 40667>>	85-	1	M28.43/44 M 215
(1A)	928 612 033 00	adapter	86	1	M28.45/46 (AUS)

Pos	Part Number	Name	Remarks	Qty	Model
2	927 612 201 00	wiring harness engine compartment lamp	-83	1	
3	477 971 921	protection cap		1	
4	911 612 115 02	connector housing		1	
5	928 631 108 00	connector housing		2	
6	999 652 167 40	terminal sleeve housing		1	
7	999 652 167 40	terminal sleeve housing		1	
8	810 971 989	connector housing		1	
9	311 971 867 A	protection cap		22	
10	477 971 934	protection cap		1	
		mounting parts			
-	999 511 138 02	clip		1	
-	E 928 503 113 02	hexagon-head bolt M 6 X 25		1	
-	999 651 161 40	cable tie		11	
-	999 513 023 40	tie-wrap -120 MM -		13	
-	999 513 007 40	tie-wrap - 88 MM -		8	
-	999 513 023 40	tie-wrap -160 MM -		2	
-	928 612 448 00	support	/RL	1	
		- -- E N D -- -			

Pos	Part Number	Name	Remarks	Qty	Model

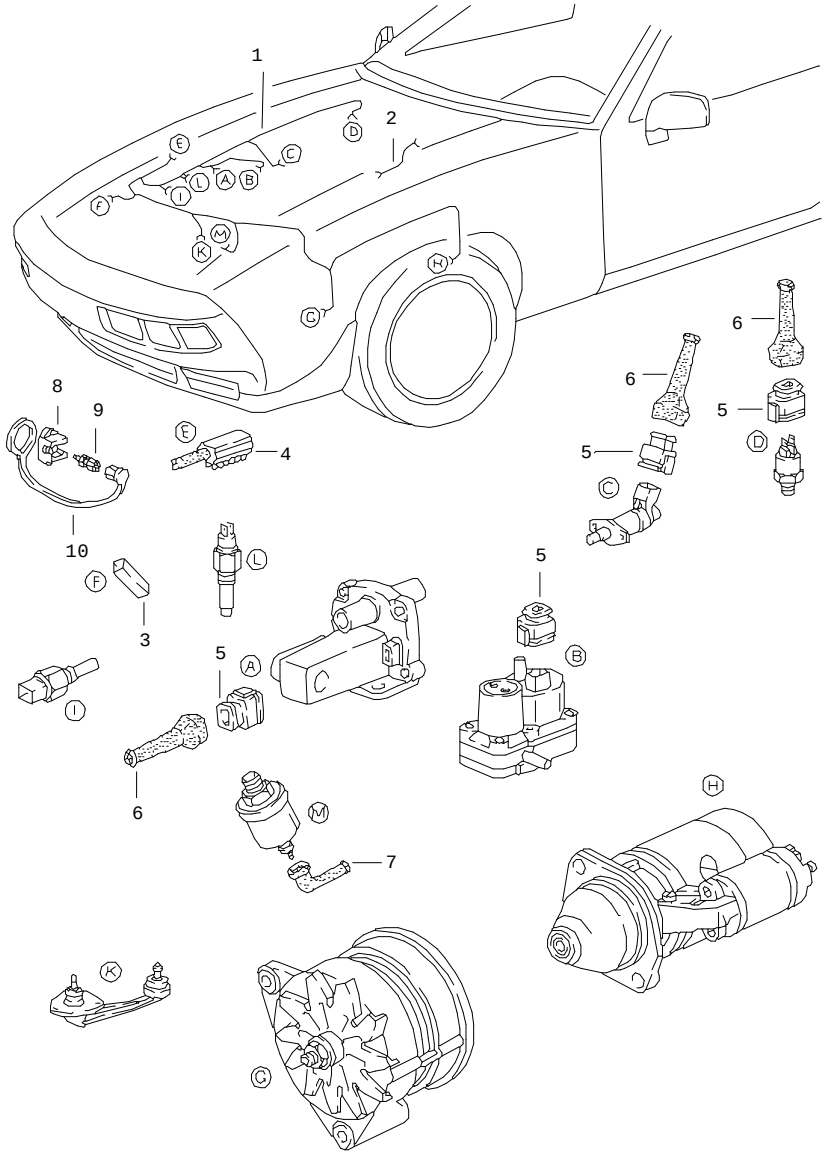

Pos	Part Number	Name	Remarks	Qty	Model
		wiring harness engine			
1	928 612 002 04	wiring harness	-83	1	
(1)	928 612 002 10	wiring harness	84	1	M28.21/22
(1)	928 607 002 02	wiring harness	85	1	M28.21/22
(1)	928 612 002 09	wiring harness	84	1	M28.21/22 M 593
(1)	928 607 002 03	wiring harness see technical information 9-NR 1/86	85-	1	M28.21/22 M 593
(1)	928 612 002 05	wiring harness	-83	1	M28.20 (J)
(1)	928 612 002 08	wiring harness	84	1	M28.20 (J)
(1)	928 607 002 01	wiring harness	85	1	M28.44 (J)
(1)	928 607 002 10	wiring harness see technical information 9-NR 1/86	86	1	M28.43/44 M28.45/46
2	928 612 011 00	ground cable		1	
-	928 612 907 00	wiring harness control pressure		1	
-	928 612 203 00	wiring harness oil pressure switch converter	84-	1	M 208
3	111 971 977	plug with guide		1	
4	911 612 113 05	connector housing		1	
5	022 906 231 A	connector housing		4	
6	022 906 102	protection cap		4	
7	928 612 497 00	protection cap		2	
8	928 612 867 00	cable connection		1	
9	928 612 868 00	hexagon-head bolt	-84	1	
(9)	928 612 868 01	hexagon-head bolt	85-	1	

Pos	Part Number	Name	Remarks	Qty	Model
10	928 612 869 00	protection cap	-84	1	
(10)	928 612 073 00	protection cap	85-	1	
-	N 020 902 1	tie-wrap tsz switch unit		3	
		ground cable			
-	N 012 241 8	spring washer B 8		1	
-	N 010 239 11	hexagon-head bolt M 8 X 18		1	
		- -- E N D -- -			

Pos	Part Number	Name	Remarks	Qty	Model

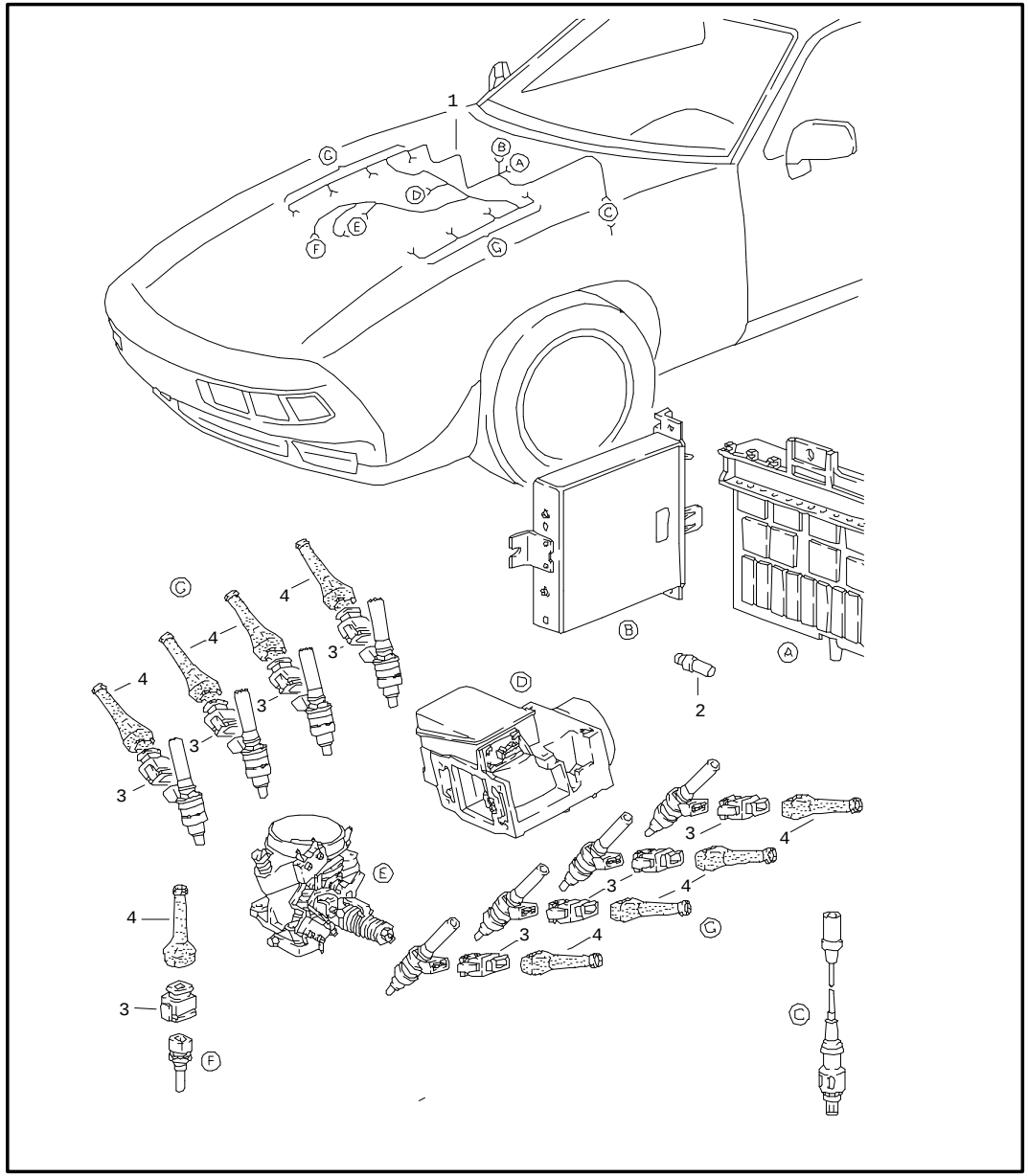

Pos	Part Number	Name	Remarks	Qty	Model
		wiring harness l-jetronic			
1	928 612 013 02	wiring harness		1	
2	113 919 113	connector housing		1	
3	022 906 231 A	connector housing		9	
4	022 906 102	protection cap		9	
		mounting parts			
-	999 513 003 40	tie-wrap 4,8 X 293		5	
		- -- E N D -- -			

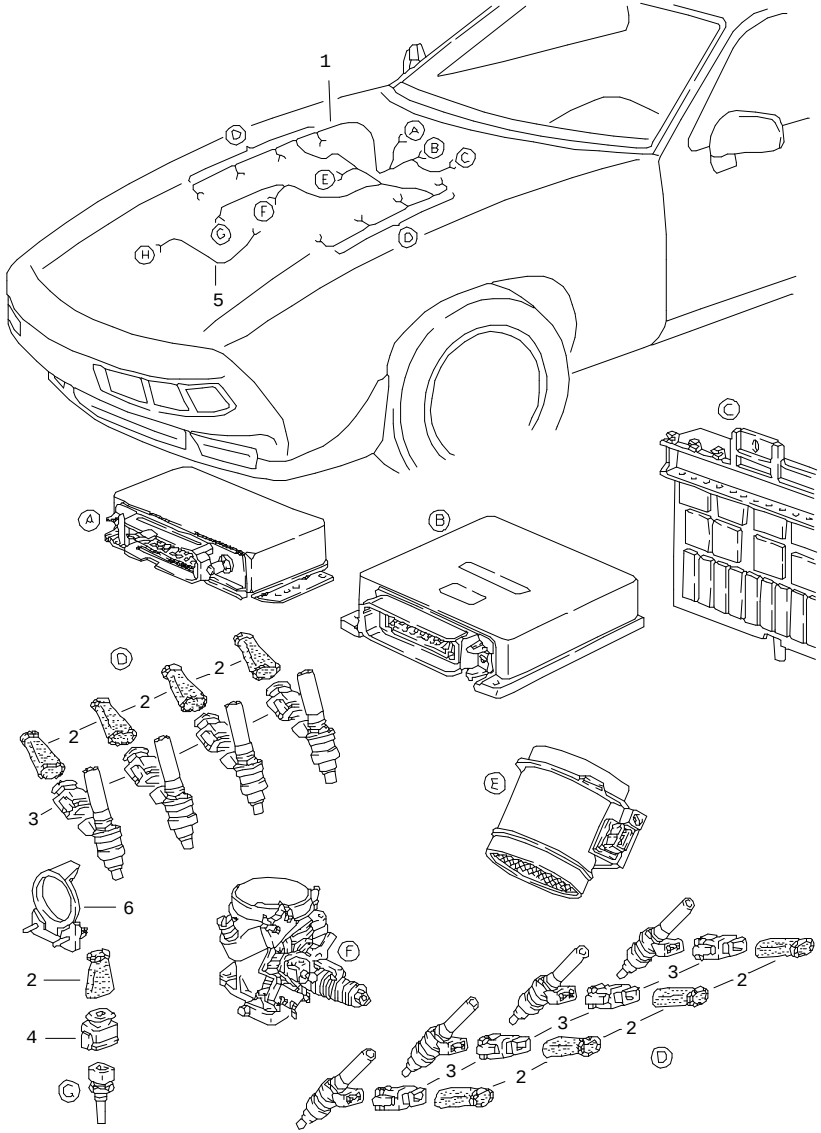

Pos	Part Number	Name	Remarks	Qty	Model
		wiring harness lh-jetronic			
1	928 612 015 00	wiring harness	84	1	M28.21/22
(1) E	928 607 015 00	wiring harness	85	1	M28.21/22
(1)	928 607 015 03	wiring harness	85- 86	1	M28.43/44 M28.45/46
2	944 612 128 00	protection cap		10	
4	928 612 817 00	connector housing		1	
5	928 607 115 00	wiring harness	 86	1	M28.43/44 M28.45/46
6	944 612 417 01	cover	86 86	1	M28.43/44 M28.45/46
		data link connector			
		mounting parts			
-	N 020 904 4	tie-wrap		13	
-	N 020 626 2	clamp B 15 X 16		2	
-	999 651 159 02	cable clamp		1	
		- -- E N D -- -			

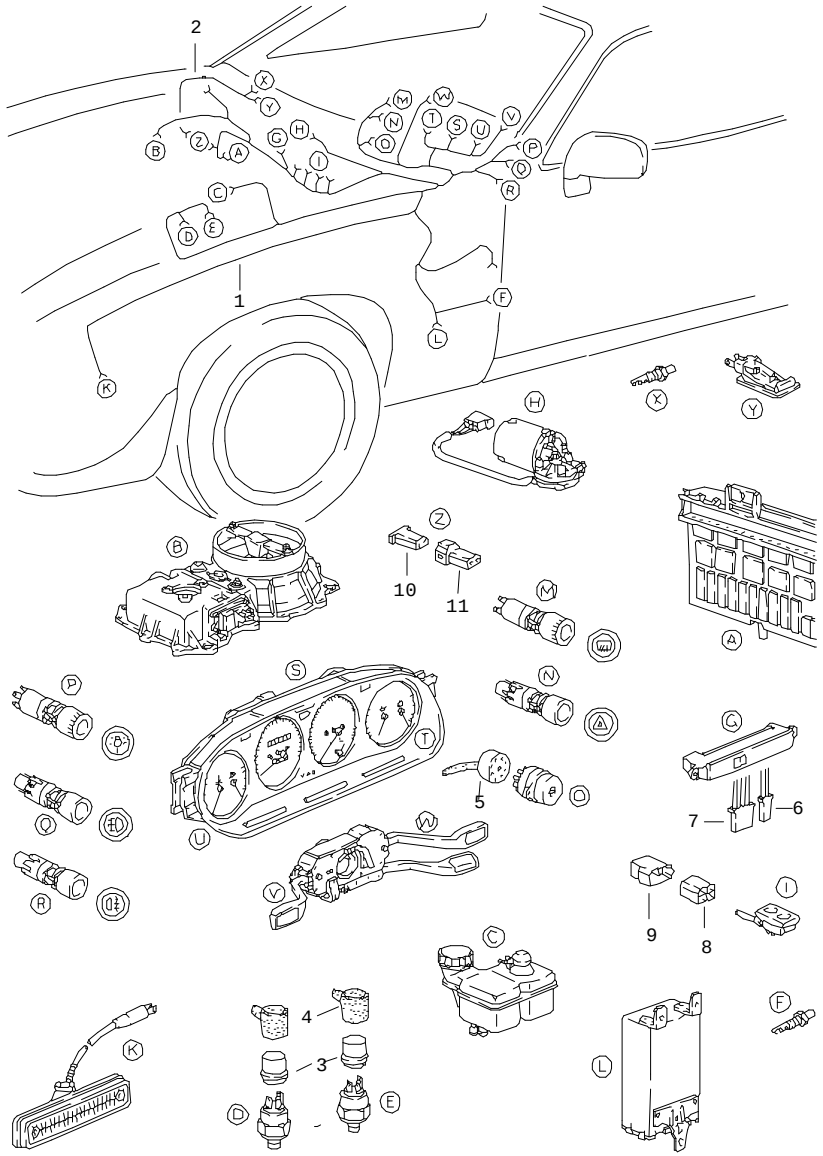

Pos	Part Number	Name	Remarks	Qty	Model
		wiring harness dashboard			
1	928 612 003 20	wiring harness	/LL -83	1	
(1)	928 612 003 21	wiring harness	/LL 84	1	
(1)	928 612 003 22	wiring harness F >>92FS8 48408	/LL 85	1	
(1)	928 612 003 25	wiring harness F 92FS8 48409>>	/LL 85	1	
(1)	928 612 003 24	wiring harness	/LL 86	1	
(1)	928 612 003 22	wiring harness F >>92FS8 49589	/LL 85	1	(J)
(1)	928 612 003 25	wiring harness F 92FS8 49590>>	/LL 85	1	(J)
(1)	928 612 003 24	wiring harness	86	1	(J)
(1)	927 612 003 07	wiring harness	/RL -83	1	
(1)	927 612 003 10	wiring harness	/RL 84	1	
(1)	927 612 003 12	wiring harness F >>92FS8 48408	/RL 85	1	
(1)	927 612 003 14	wiring harness F 92FS8 48409>>	/RL 85	1	
(1)	927 612 003 13	wiring harness	/RL 86	1	
-	928 612 474 01	bridge for cars without alarm system	85	1	
2	928 612 038 00	wiring harness glove compartment light		1	
3	113 945 525	terminal sleeve housing		2	
4	211 945 521 C	protection cap		2	
5	911 612 889 00	connector housing 10-pole		1	
6	171 971 998 A	connector housing		1	
7	171 971 998 C	connector housing		1	
8	928 612 414 04	connector housing		X	

Pos	Part Number	Name	Remarks	Qty	Model
9	928 612 413 00	connector housing blue		X	
(9)	928 612 413 03	connector housing yellow		X	
10	171 971 999 A	terminal sleeve housing		1	
11	171 971 998 A	connector housing		1	
		mounting parts			
-	999 513 002 40	tie-wrap -286 MM -		1	
-	999 513 023 40	tie-wrap -293 MM -		1	
-	999 513 007 40	tie-wrap -80 MM -		8	
-	999 651 152 02	cable clamp		1	
-	999 591 380 02	cable clamp		5	
-	477 971 939	cable terminal		5	
-	928 612 091 00	bridge central electrical system		1	
-	928 612 177 00	connecting line exhaust gas	-84	1	(J)
-	928 612 202 01	wiring harness switch unit exhaust gas	-83	1	
-	928 612 202 02	wiring harness switch unit exhaust gas	84	1	(J)
-	928 612 202 03	wiring harness switch unit exhaust gas	85-	1	(J)
-	928 612 204 00	single line switch unit exhaust gas	84	1	(J)
-	928 612 204 01	single line switch unit exhaust gas	85-	1	(J)
-	911 617 108 00	diode		1	(J)

Pos	Part Number	Name	Remarks	Qty	Model
		- -- E N D -- -			

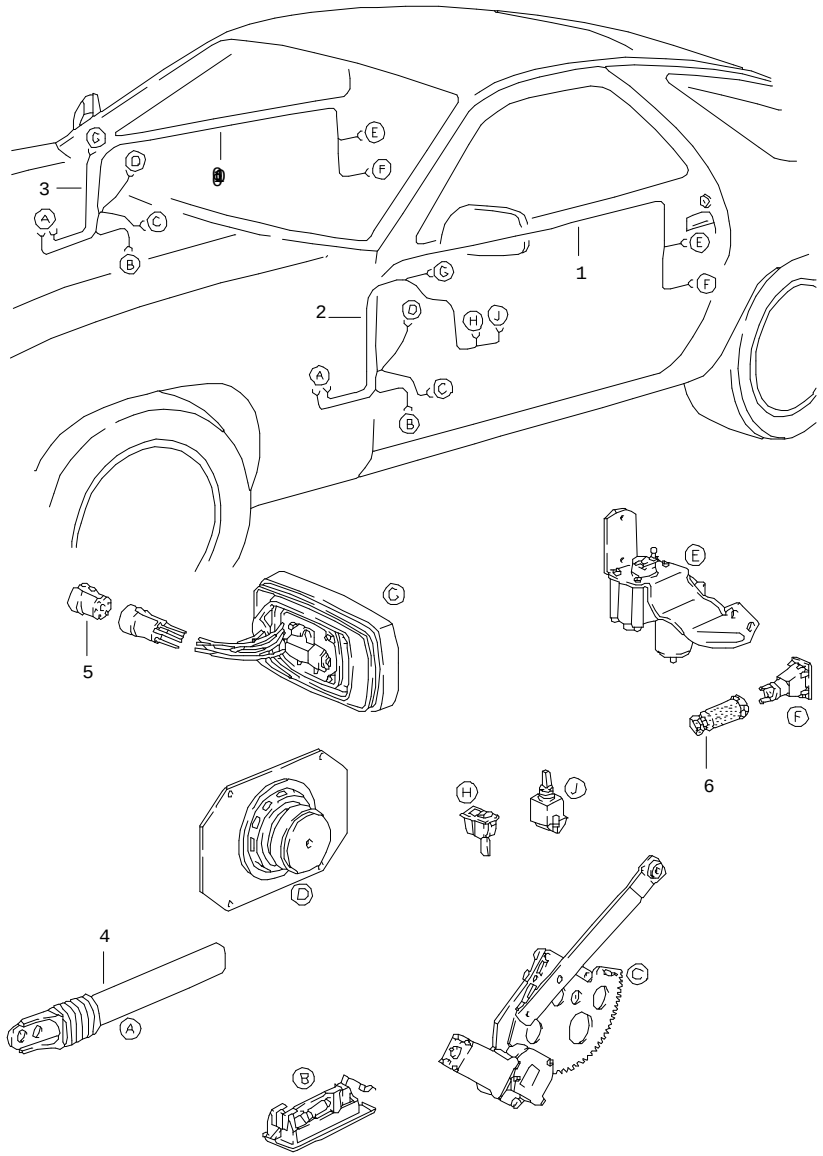

Pos	Part Number	Name	Remarks	Qty	Model
		wiring harness door			
1	928 612 167 02	wiring harness		2	
2	928 612 164 02	wiring harness driver's side		1	M 261,528
(2)	928 612 163 02	wiring harness driver's side		1	
3	928 612 166 02	wiring harness passenger's side		1	M 261,528
4	928 555 551 02	cable guide		2	
5	803 971 979	plug socket 7-pole		2	
		mounting parts			
-	113 142 261 A	clip	-83	4	
-	477 971 851	cable clip	84-	4	
6	E 999 659 002 50	protective cap		2	
		- -- E N D -- -			

Model	Year	MG	SG	Illustration	Restrictions	Update				
928	86	9	02	902-12		179	15:05	01.09.2004	PORSCHE	PET	PORSCHE

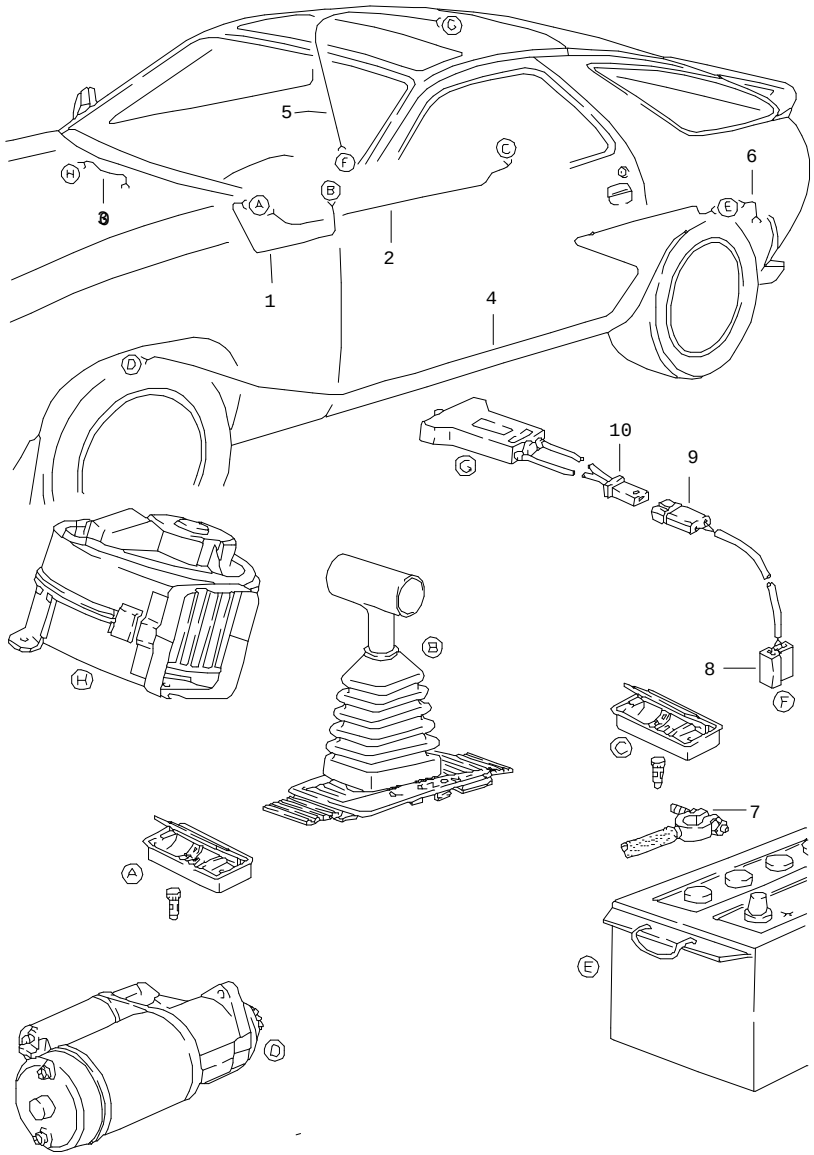

Pos	Part Number	Name	Remarks	Qty	Model
		wiring harness passenger compartment			
1	928 612 172 01	wiring harness illumination selector lever	-84	1	M 249
2	928 612 020 00	wiring harness cigarette lighter front cigarette lighter rear		1	
3	928 612 040 00	wiring harness switch of fan	/LL	1	
3	927 612 040 00	wiring harness switch of fan	/RL	1	
4	928 612 007 01	battery-starter cable	-85	1	
(4)	928 612 007 02	battery-starter cable	86	1	
5	928 612 006 01	wiring harness		1	M 650
6	928 612 009 13	ground cable battery		1	
7	928 611 898 01	terminal clamp		1	
8	999 652 167 40	terminal sleeve housing		1	
9	171 971 998 A	connector housing		1	
10	171 971 999 A	terminal sleeve housing		1	
		mounting parts			
		battery-starter cable			
-	999 513 003 40	tie-wrap steering gear		1	
-	928 612 140 00	cable holder link bearing	-85	1	
-	N 012 234 5	spring washer B 7		1	

Pos	Part Number	Name	Remarks	Qty	Model
-	E 900 187 016 02	hexagon-head tapping screw 6,3 X 13		1	
-	928 612 902 00	clamp bracket		10	
-	999 511 156 00	clamp 13/15 W 5	86	13	
-	999 591 839 40	hexagon nut T 5 floor section	86	13	
-	999 702 124 50	grommet ground cable		1	
-	E 999 044 001 02	winged nut		1	
-	N 012 241 8	spring washer B 8		1	
-	900 151 008 02	washer A 8,4		1	
-	999 702 128 50	grommet 8 X 10 X 15		1	
		- -- E N D -- -			

Model	Year	MG	SG	Illustration	Restrictions	Update				
928	86	9	02	902-14		179	15:05	01.09.2004	PORSCHE	PET	PORSCHE

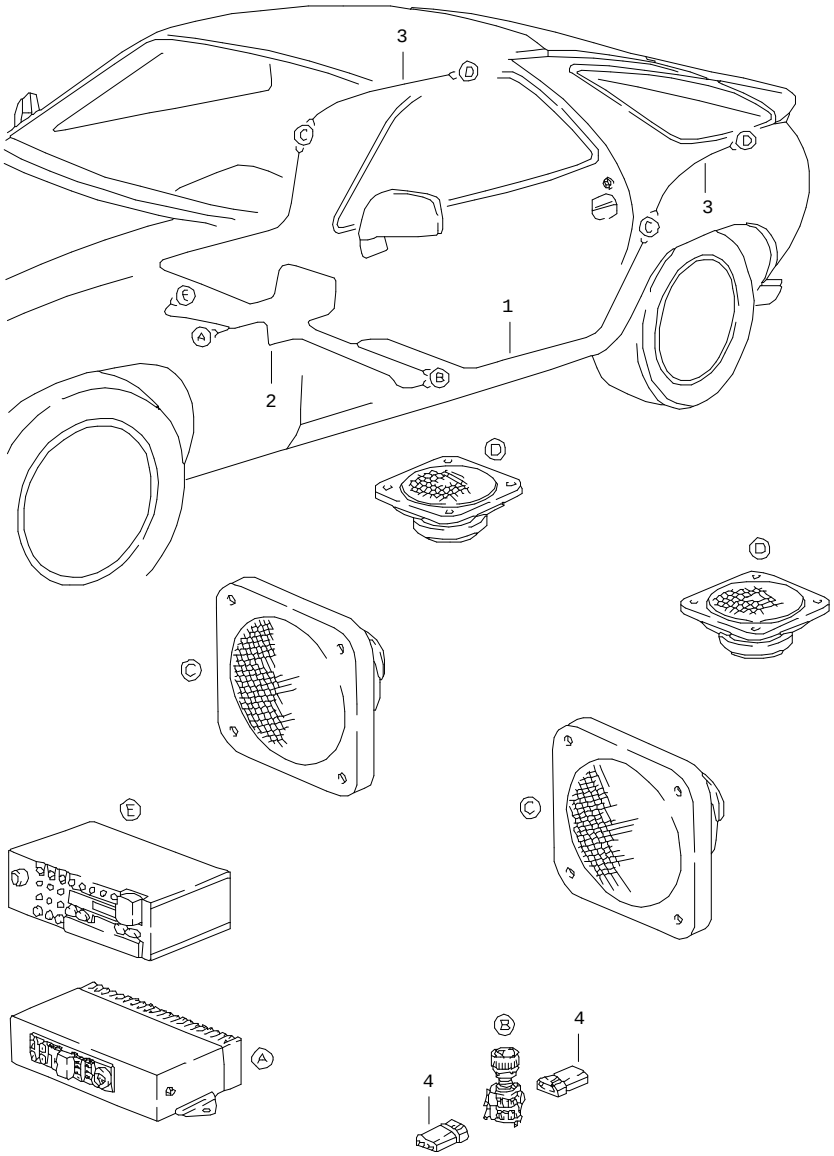

Pos	Part Number	Name	Remarks	Qty	Model
		wiring harness loudspeaker	-85		
1	928 612 067 02	wiring harness	/LL -85	1	
(1)	927 612 067 00	wiring harness	/RL -85	1	
2	928 612 068 02	wiring harness	/LL -84	1	M 494
(2)	928 612 068 03	wiring harness	/LL 85	1	M 494
(2)	927 612 068 00	wiring harness	/RL	1	M 494
3	928 612 069 00	wiring harness		2	M 490
4	171 971 998 C	connector housing		2	
-	944 612 853 01	tie-wrap		4	

- -- E N D -- -

Model	Year	MG	SG	Illustration	Restrictions	Update				
928	86	9	02	902-15		179	15:06	01.09.2004	PORSCHE	PET	PORSCHE

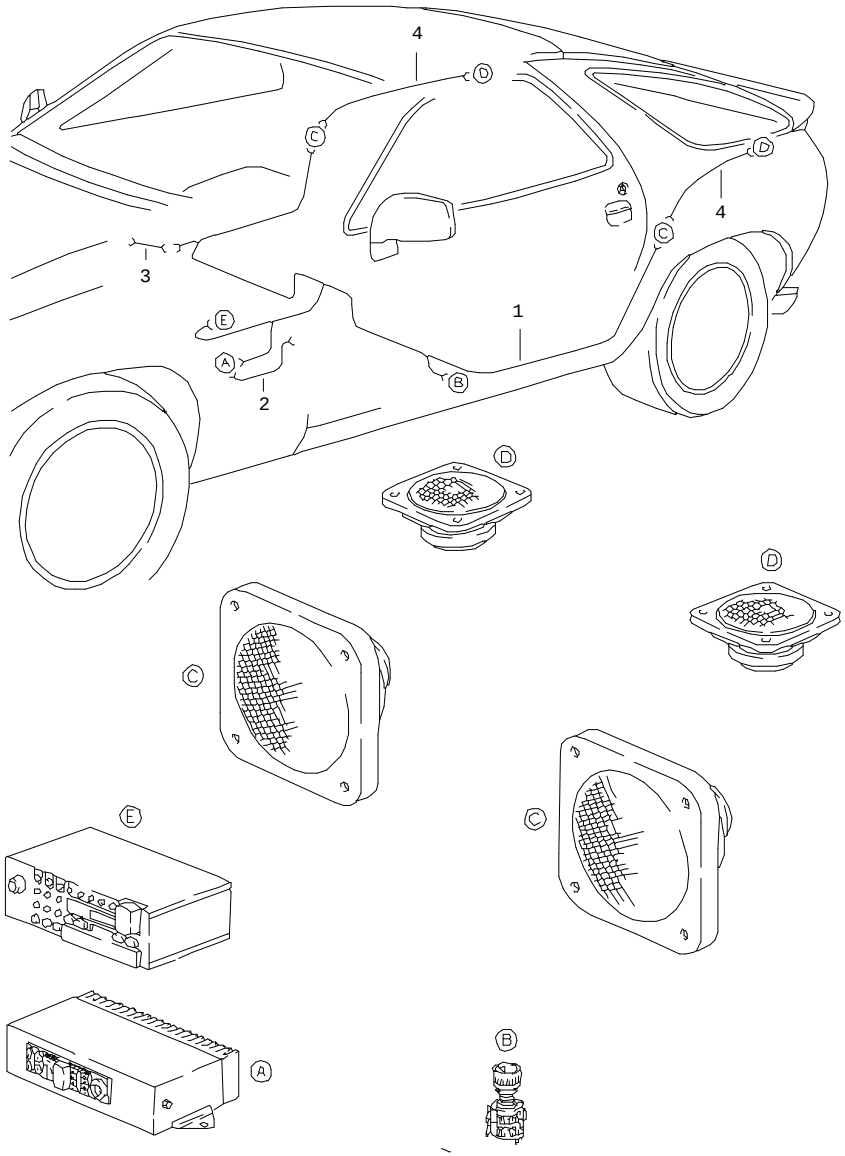

Pos	Part Number	Name	Remarks	Qty	Model
		wiring harness loudspeaker	86		
1	E 928 612 066 00	wiring harness	/LL	1	M 327 M 328 M 329 M 330
(1)	928 612 068 04	wiring harness	/LL	1	M 327 M 328 M 329 M 330 M 494
(1)	928 612 066 01	wiring harness	/LL	1	M 686 M 688
(1)	928 612 068 05	wiring harness	/LL	1	M 686 M 688 M 494
(1)	E 928 612 066 00	wiring harness	/RL	1	M 327 M 328 M 330
(1)	928 612 068 04	wiring harness	/RL	1	M 327 M 328 M 330 M 494
(1)	928 612 066 01	wiring harness	/RL	1	M 686 M 688
(1)	928 612 068 05	wiring harness	/RL	1	M 686 M 688 M 494
2	928 612 065 00	wiring harness		1	M 494
3	927 612 068 01	wiring harness	/RL	1	M 494
4	928 612 069 00	wiring harness		1	M 490
		- -- E N D -- -			

Model	Year	MG	SG	Illustration	Restrictions	Update				
928	86	9	02	902-16		179	15:06	01.09.2004	PORSCHE	PET	PORSCHE

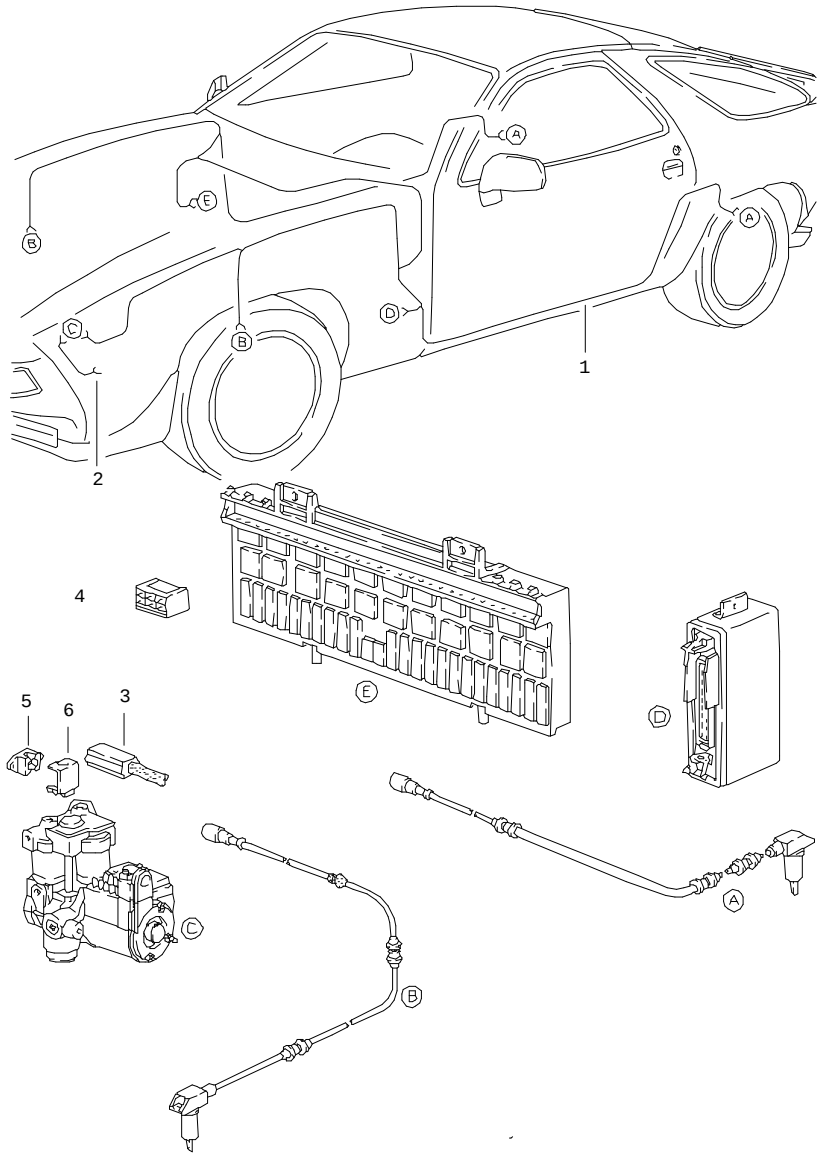

Pos	Part Number	Name	Remarks	Qty	Model
		wiring harness anti-lock brake system	-85		
1	928 612 121 00	wiring harness	/LL 84	1	
(1)	928 612 121 03	wiring harness	/LL 85-	1	
(1)	927 612 121 00	wiring harness	/RL 84	1	
(1)	927 612 121 02	wiring harness	/RL 85-	1	
2	928 612 189 01	ground strap		1	
3	928 612 423 00	connector housing 12-pole		1	
4	803 971 831	terminal sleeve housing	84	1	
(4)	161 971 975 A	connector housing	85-	1	
5	928 612 867 00	cable connection		1	
6	928 612 874 00	cap		1	
		- -- E N D -- -			

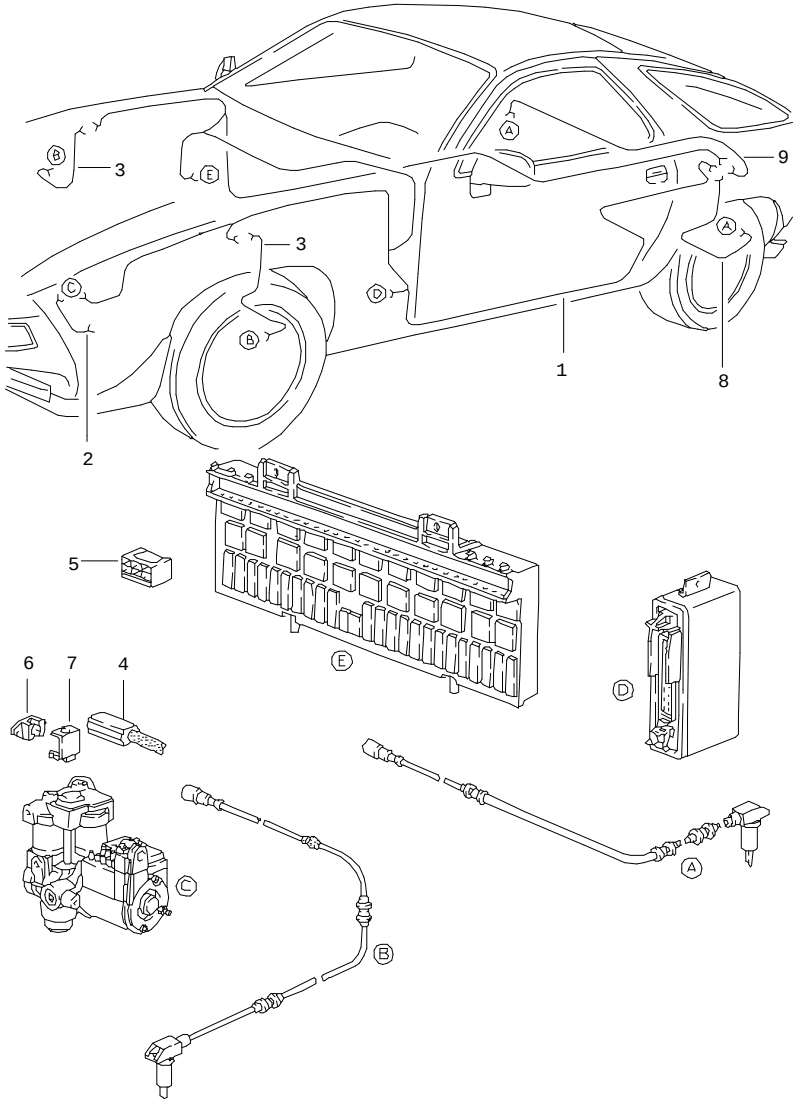

Pos	Part Number	Name	Remarks	Qty	Model
		wiring harness anti-lock brake system	86		
1	928 612 121 05	wiring harness	/LL	1	
(1)	927 612 121 04	wiring harness	/RL	1	
2	928 612 189 01	ground strap		1	
3	928 612 403 00	wiring harness		2	
4	928 612 423 00	connector housing 12-pole		1	
5	161 971 975 A	connector housing		1	
6	928 612 867 00	cable connection		1	
7	928 612 874 00	cap		1	
8	E 928 612 405 00	wiring harness	/L	1	
9	928 612 406 00	wiring harness	/R	1	
		- -- E N D -- -			

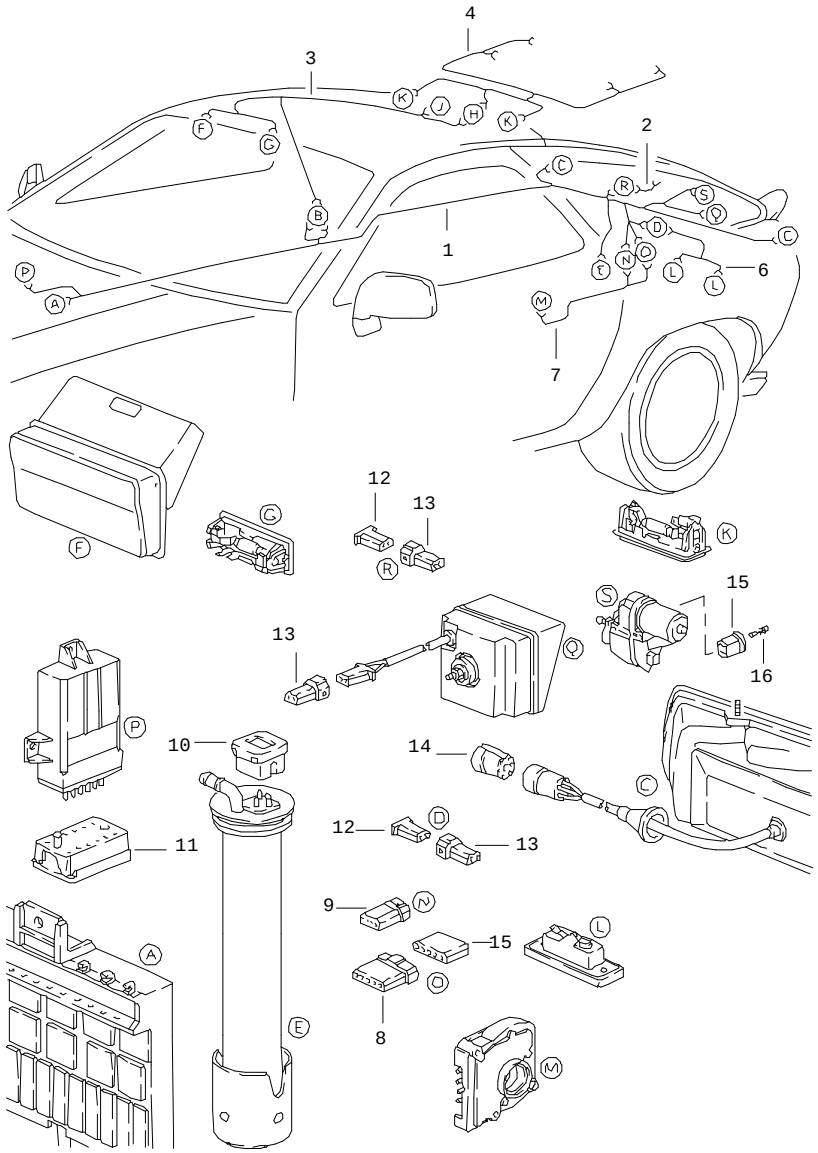

Pos	Part Number	Name	Remarks	Qty	Model
		wiring harness rear end			
1	928 612 004 18	wiring harness	/LL -83	1	
(1)	928 612 004 21	wiring harness	/LL 84	1	
(1) E	928 612 004 22	wiring harness	/LL 85	1	M 481
(1)	928 612 004 25	wiring harness	/LL 86	1	M 481
(1)	928 612 004 24	wiring harness	/LL 85	1	M 249
(1)	928 612 004 26	wiring harness	/LL 86	1	M 249
(1)	928 612 004 21	wiring harness	84	1	(J)
(1)	928 612 004 19	wiring harness	83	1	(J)
(1)	927 612 004 10	wiring harness	/RL -83	1	
(1)	927 612 004 12	wiring harness	/RL 84	1	
(1)	927 612 004 13	wiring harness	/RL 85	1	M 481
(1)	927 612 004 16	wiring harness	/RL 86	1	M 481
(1)	927 612 004 15	wiring harness	/RL 85	1	M 249
(1)	927 612 004 17	wiring harness	/RL 86	1	M 249
-	N 100 641 01	safety fuse T 1,0 B rear lid unlocking device		1	
-	928 612 479 00	fuse holder rear lid unlocking device		1	
2	928 612 037 00	wiring harness	-83	1	
(2)	928 612 037 01	wiring harness	84	1	
(3)	928 612 008 03	wiring harness	83 84 85	1	
(3)	928 612 008 05	wiring harness	86-	1	
4	928 612 005 02	wiring harness	-85	1	
(4)	928 612 005 03	wiring harness	86	1	
6	928 612 039 00	wiring harness	-83	1	

Pos	Part Number	Name	Remarks	Qty	Model
(6)	928 612 039 01	wiring harness	84-	1	
7	928 612 012 02	wiring harness 3 speed	83	1	M 249
(7)	928 612 012 03	wiring harness 4-speed	84	1	M 249
(7)	928 612 012 05	wiring harness 4-speed	85	1	M 249
(7)	928 612 012 06	wiring harness 4-speed	86	1	M 249
7	928 612 016 01	wiring harness back-up light	-84	1	M 481
(7)	928 612 016 02	wiring harness back-up light	85-	1	M 481
-	928 612 072 00	wiring harness in-tank fuel pump	84-	1	
8	171 971 998 E	connector housing 6-pole		1	
9	171 971 998 C	connector housing 4-pole		1	
10	901 612 891 01	connector housing 3-pole		1	
11	928 612 423 00	connector housing 12-pole		1	
12	171 971 999 A	terminal sleeve housing 2-pole		1	
13	171 971 998 A	connector housing 2-pole		1	
14	803 971 979	plug socket		2	
15	928 612 131 00	connector housing		1	
16	999 652 269 12	contact spring		4	
		mounting parts			
		transmission			
-	999 651 160 02	cable holder		2	
-	928 612 493 00	cable holder		1	M 249
-	999 651 168 40	cable holder		1	M 249
-	113 941 189	grommet sender speedometer		1	
-	E 999 651 158 02	cable holder sender speedometer		1	
		wheel housing			
-	999 513 021 40	tie-wrap		1	
		rear lid			
-	477 971 939	cable terminal		5	
-	999 591 380 02	cable clamp		5	
		- -- E N D -- -			

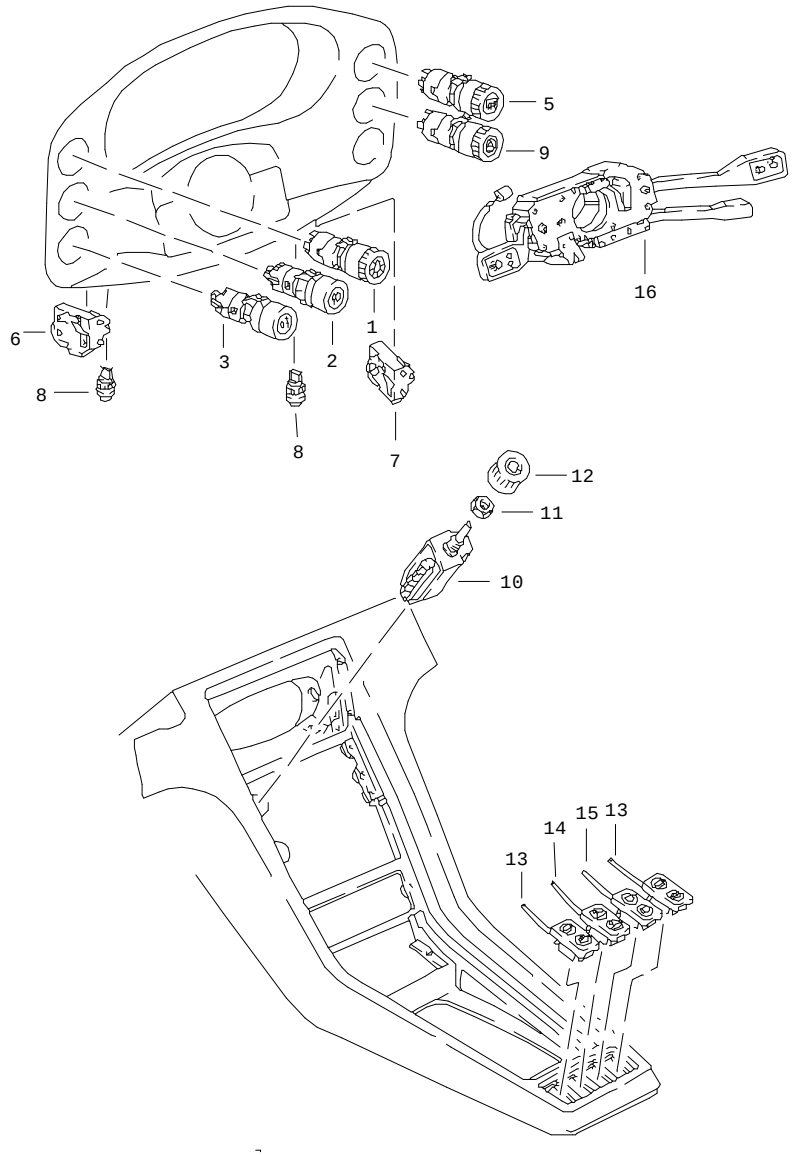

Pos	Part Number	Name	Remarks	Qty	Model
		switch manual			
1	928 613 103 00	combined switch for light		1	
2	928 613 111 00	switch fog headlamp		1	
3	928 613 109 00	switch for rear fog light		1	
5	928 613 107 01	combined switch rear window heating		1	
6	928 613 121 01	potentiometer illumination		1	
7	928 613 122 00	potentiometer wipe interval		1	
8	928 613 124 00	push-button tripmeter		1	
(8)	928 613 124 00	push-button intensive windscr. washer		1	
9	928 613 105 01	hazard warning light sw.		1	
10	928 613 127 00	blower switch		1	
11	999 034 007 02	hexagon flat nut M 12 X 1		1	
12	928 613 731 01	rotary knob blower switch		1	
-	999 591 434 02	spring blower switch		1	
13	928 613 123 05	tip switch for window opener		2	
14	928 613 120 00	tip switch sunroof		1	M 650
(15)	928 613 129 03	tip switch rear window wiper		1	
(15)	928 613 123 04	display specimen		1	
		door mirror switch see group 8/09/10			

Pos	Part Number	Name	Remarks	Qty	Model
		steering column switch			
16	928 613 101 03	steering column switch without cruise control with headlight washer system	-85	1	
16	928 613 101 05	steering column switch with cruise control with headlight washer system		1	M 489
(16)	928 613 101 06	steering column switch with cruise control with headlight washer system lettering english		1	
(16)	928 613 101 07	steering column switch with cruise control with headlight washer system		1	(F)
-	999 651 165 02	cable clamp		1	
		- -- E N D -- -			

Model	Year	MG	SG	Illustration	Restrictions	Update				
928	86	9	03	903-05		179	15:07	01.09.2004	PORSCHE	PET	PORSCHE

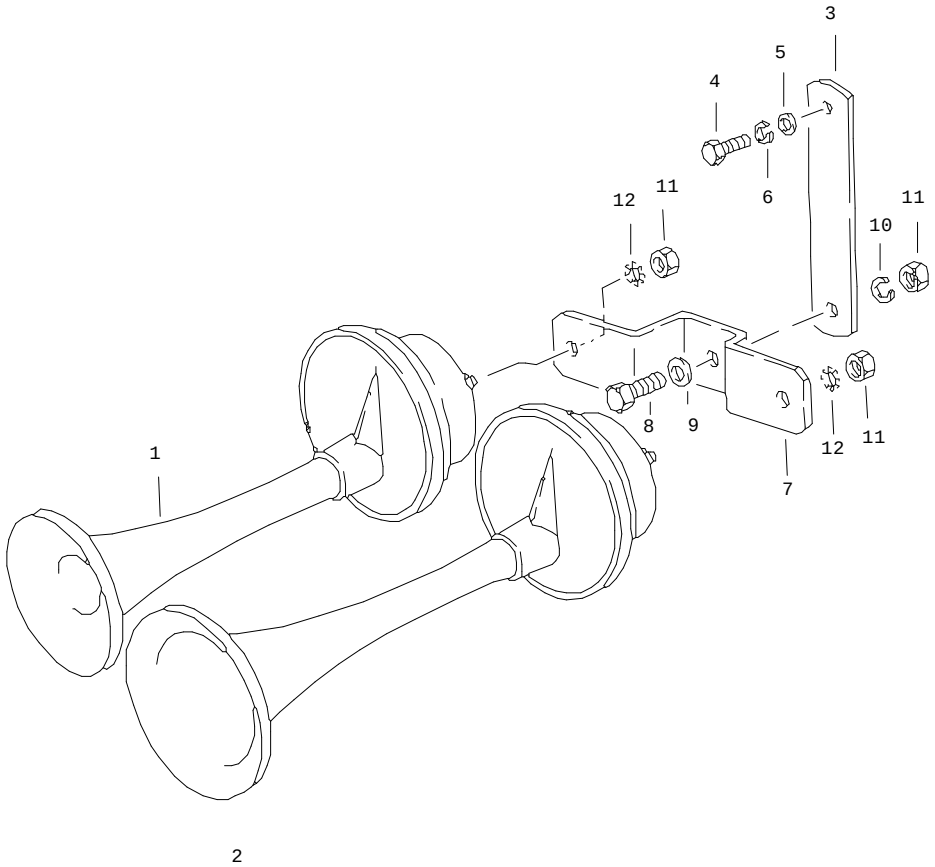

Pos	Part Number	Name	Remarks	Qty	Model
		fanfare			
1	911 635 101 20	fanfare high-pitched		1	
2	911 635 102 20	fanfare low-pitched		1	
3	928 635 101 00	support		1	
4	900 075 087 02	hexagon-head bolt M 8 X 16		1	
5	900 025 007 02	washer 8,4		1	
6	900 027 015 02	lock ring B 8		1	
7	928 635 103 01	support		1	
8	900 075 057 02	hexagon-head bolt M 6 X 16		1	
9	N 011 524 7	washer A 6,4		1	
10	N 012 006 4	lock ring B 6		1	
11	900 076 010 02	hexagon nut M 6		2	
12	N 042 121 3	shake-proof washer A 6,4		2	
		- -- E N D -- -			

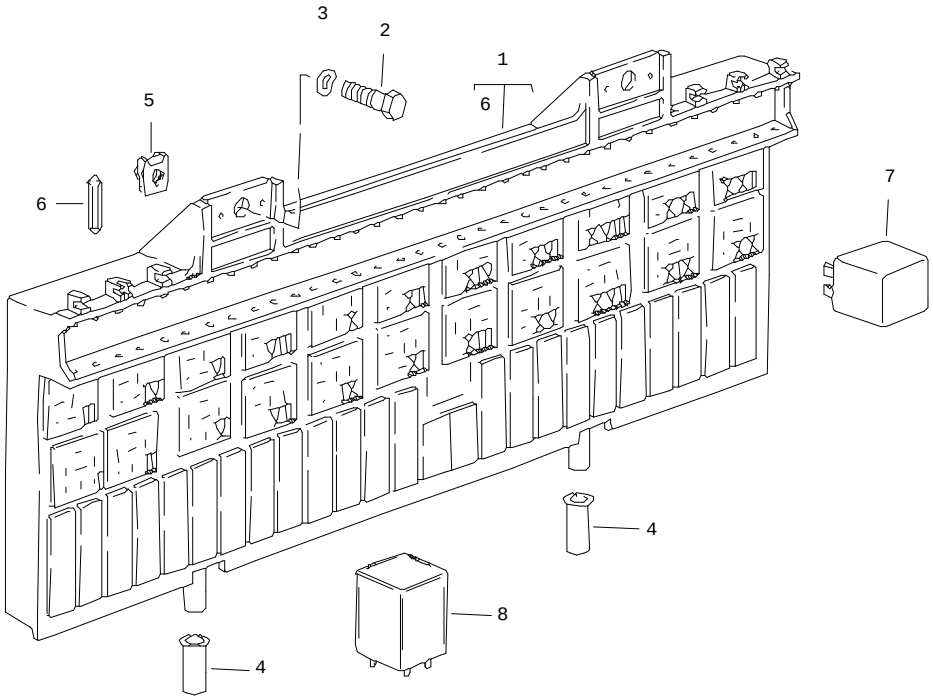

Pos	Part Number	Name	Remarks	Qty	Model
		central electrical system relay fuse	-84		
1	928 610 105 06	plate	83	1	
(1)	928 610 105 08	plate	84	1	
(1)	928 610 105 07	plate	84	1	M 193
2	900 075 014 02	hexagon-head bolt M 6 X 18	-84	2	
3	N 012 226 5	spring washer A 6,4	-84	2	
4	928 628 287 00	grommet	-84	2	
5	999 507 246 02	speed nut M 6	-84	2	
6	N 017 121 1	safety fuse 8 AMP.		X	
(6)	N 017 121 4	safety fuse 16 AMP.		X	
(6)	N 017 121 5	safety fuse 25 AMP.		X	
(6)	900 321 002 90	safety fuse T 0,40 B central locking system		2	
7	-	relay	-83	X	
I-II	928 615 115 00	slow-action relay rear window heating		1	
V	111 953 227 D	flasher relay		1	
(V)	928 615 131 00	flasher relay trailer coupling		1	
VI	928 615 116 00	relay for window opener		1	
VII	928 618 111 00	relay headlight washer system		1	
IX	928 615 125 01	bridge manual transmission		1	

Pos	Part Number	Name	Remarks	Qty	Model
X	141 951 253 B	relay horn		1	
XII	141 951 253 B	relay fog headlamp		1	
XII	928 615 137 01	relay fog headlamp		1	(J)
XIII	993 615 101 00	switch unit wipe interval		1	
(XIV)	928 612 473 00	bridge starter		1	
(XIV)	141 951 253 B	relay starter		1	M 249
XV	928 618 113 01	relay intensive windscr. washer		1	
XVII	928 615 113 01	relay fuel pump		1	
XVIII	141 951 253 B	relay blower air conditioner		1	
XIX	928 618 107 02	relay pop-up headlight		1	
XX	928 618 107 02	relay pop-up headlight		1	
XXI	141 951 253 B	relay blower		1	
XXII	141 951 253 B	relay defroster		1	
		relay	84		
I-II	928 615 115 00	slow-action relay rear window heating		1	
III	141 951 253 B	relay for window opener		1	
IV	141 951 253 B	relay for window opener		1	M 553 M 533,193
V	111 953 227 D	flasher relay		1	

Pos	Part Number	Name	Remarks	Qty	Model
V	928 615 131 00	flasher relay trailer coupling		1	
VI	928 615 116 00	relay for window opener		1	
VII	928 618 111 00	relay headlight washer system		1	
VIII	141 951 253 B	relay EZF		1	
IX	928 618 109 01	relay kickdown		1	
IX E	928 618 109 00	relay kickdown		1	M 193
IX	928 615 125 01	bridge manual transmission		1	
X	141 951 253 B	relay fanfare		1	
XI	928 615 124 00	relay anti-lock brake system		1	M 593
XII	141 951 253 B	relay fog headlamp		1	
(XII)	928 615 117 02	relay fog headlamp		1	M 193
(XII)	928 615 137 01	relay starter		1	M 215
XIII	993 615 101 00	switch unit windscreen wiper system		1	
XIV	141 951 253 B	relay starter		1	M 249
(XIV)	928 612 473 00	bridge starter		1	
XV	928 618 113 01	relay intensive windscr. washer		1	
XVI	141 951 253 B	relay lh-jetronic		1	
(XVI)	928 615 119 00	relay l-jetronic		1	M 193

Pos	Part Number	Name	Remarks	Qty	Model
XVII	141 951 253 B	relay fuel pump		1	
(XVII	928 615 113 01	relay fuel pump		1	M 193
XVIII	141 951 253 B	relay fan		1	
XIX	928 618 107 02	relay for light		1	
XX	928 618 107 02	relay for light		1	
XXI	141 951 253 B	relay blower		1	
XXII	141 951 253 B	relay defroster		1	
Z	928 612 091 00	bridge alarm system		1	
		relay seat adjuster see group 8/08/15			
		relay centre console			
8	928 618 102 03	relay seat belt		1	
(8)	928 618 104 00	relay rear window wiper		1	
(8)	911 617 119 00	switch unit emission control		2	(J)
		- -- E N D -- -			

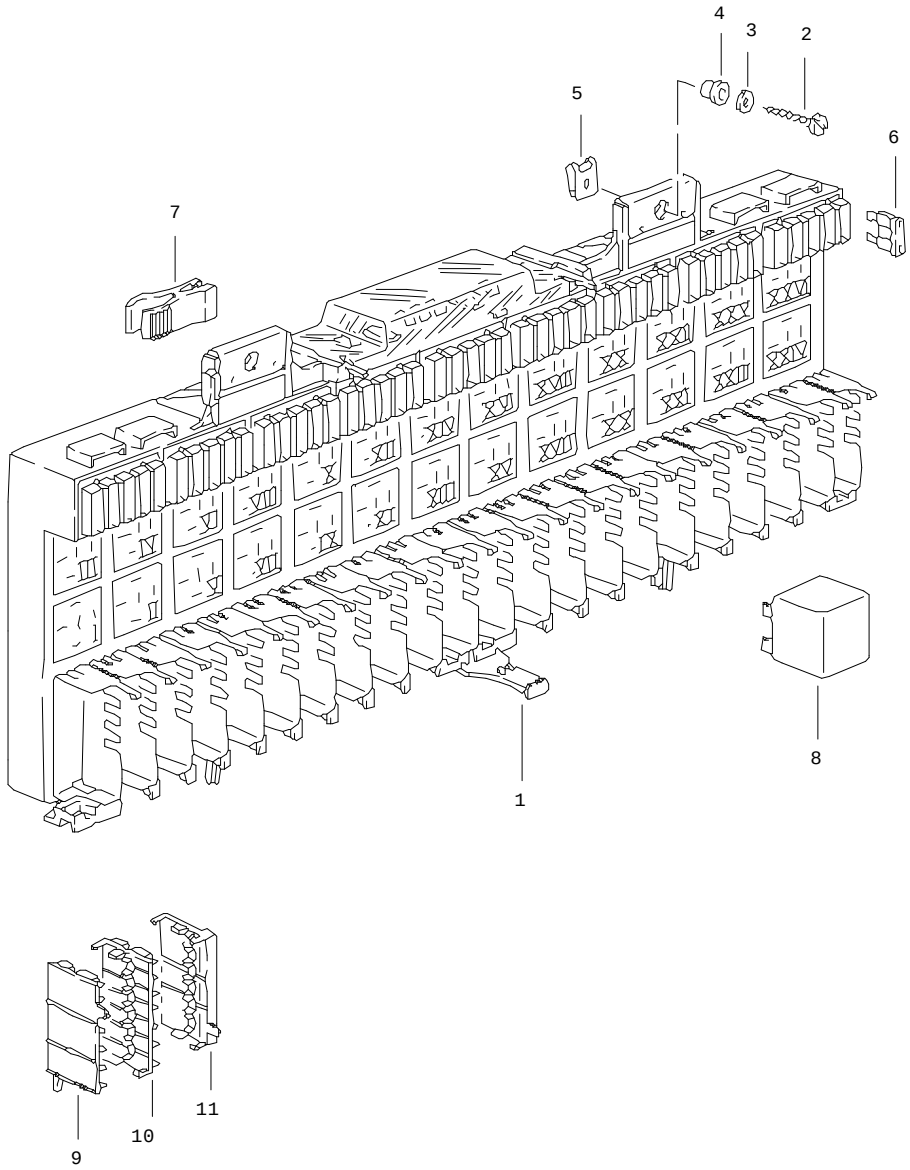

Pos	Part Number	Name	Remarks	Qty	Model
		central electrical system relay fuse F >>92FS8 48408 F >>92FS8 49589 see technical information	85-		(J)
1	928 610 105 09	plate	85	1	
(1)	928 610 105 13	plate	86	1	
2	N 013 935 2	tapping screw BZ 6,3 X 25		2	
3	N 902 076 01	washer 6,4 X 17 X 1,6		2	
4	928 628 287 00	grommet		2	
5	999 507 034 02	speed nut B 6,3		2	
6	999 607 001 00	fuse 1 AMP.		X	
(6)	999 607 004 00	fuse 5 AMP.		X	
(6)	999 607 005 00	fuse 7,5 AMP.		X	
(6)	N 017 131 11	fuse 10 AMP.		X	
(6)	999 607 007 00	fuse 15 AMP.		X	
(6)	N 017 131 13	fuse 20 AMP.		X	
(6)	999 607 009 00	fuse 25 AMP.		X	
(6)	999 607 010 00	fuse 30 AMP.		X	
7	443 941 802	tool		1	
		relay	85		
I-11	928 615 115 00	slow-action relay rear window heating		1	

Pos	Part Number	Name	Remarks	Qty	Model
IV	141 951 253 B	relay x-contact		1	
V	111 953 227 D	flasher relay		1	
(V)	928 615 131 00	flasher relay trailer coupling		1	M 208
VI	928 615 128 00	relay for window opener		1	
VII	993 615 101 00	switch unit windscreen wiper system		1	
VIII	928 615 203 00	relay defroster		1	
IX	928 618 113 01	relay intensive windscr. washer		1	
X	141 951 253 B	relay blower		1	
XI	928 618 223 00	interference-suppr. choke		1	
XII	141 951 253 B	relay fanfare		1	
XIII	141 951 253 B	relay fog headlamp		1	
XIII	928 615 117 02	relay fog headlamp		1	M 193
XIII	928 615 137 01	relay fog headlamp		1	M 553 M 215
XIV	141 951 253 B	relay starter		1	
XV	E 928 618 109 00	relay kickdown		1	M 249
XVI	141 951 253 B	relay EZF		1	
XVII	928 615 124 01	relay anti-lock brake system		1	M 593
XVIII	141 951 253 B	relay fan		1	
XIX	928 618 111 00	relay headlight washer system		1	
XX	141 951 253 B	relay fuel pump		1	
XXII	141 951 253 B	relay back-up light		1	M 249
XXII	928 615 125 00	bridge back-up light		1	M 481
XXIII	928 618 107 02	relay for light		1	
XXIV	928 618 107 02	relay for light		1	
XXV	141 951 253 B	relay lh-jetronic		1	
		relay	86		
I-II	928 615 115 00	slow-action relay rear window heating		1	
IV	141 951 253 B	relay x-contact		1	
V	111 953 227 D	flasher relay		1	
(V)	928 615 131 00	flasher relay trailer coupling		1	M 208
VI	928 615 128 00	relay for window opener		1	
VII	993 615 101 00	switch unit windscreen wiper system		1	
VIII	928 615 203 00	relay defroster		1	
IX	928 618 113 01	relay intensive windscr. washer		1	
X	141 951 253 B	relay blower		1	
XI	928 618 223 00	interference-suppr. choke		1	
XII	141 951 253 B	relay fanfare		1	
XIII	141 951 253 B	relay fog headlamp		1	

Pos	Part Number	Name	Remarks	Qty	Model
XIII	928 615 117 02	relay fog headlamp		1	M 193
XIV	141 951 253 B	relay starter		1	
XV	928 618 109 01	relay for kick-down		1	M 249
XVI	141 951 253 B	relay EZF		1	
XVII	928 615 124 01	relay anti-lock brake system		1	
XVIII	141 951 253 B	relay fan		1	
XIX	928 618 111 00	relay headlight washer system		1	
XX	141 951 253 B	relay fuel pump		1	
XXI	928 618 225 01	relay interior light		1	
XXII	928 615 125 00	bridge back-up light		1	M 481
XXII	141 951 253 B	relay back-up light		1	M 249
XXIII	928 618 107 02	relay headlamp		1	
XXIV	928 618 107 02	relay headlamp		1	
XXV	141 951 253 B	relay lh-jetronic		1	
		relay seat adjuster see group 8/08/15			
		relay centre console			
-	928 618 102 03	relay seat belt		1	

Pos	Part Number	Name	Remarks	Qty	Model
-	928 618 104 00	relay rear window wiper		1	
-	911 617 119 00	switch unit emission control		2	(J)
9	928 612 331 00	initial housing red		8	
(9)	928 612 331 00	initial housing black		13	
10	928 612 332 00	module housing		21	
11	928 612 335 25	fitting piece -A-		1	
(11)	928 612 335 25	fitting piece -B-		1	
(11)	928 612 335 25	fitting piece -C-		1	
(11)	928 612 335 25	fitting piece -D-		1	
(11)	928 612 335 25	fitting piece -E-		1	
(11)	928 612 335 25	fitting piece -F-		1	
(11)	928 612 335 25	fitting piece -G-		1	
(11)	928 612 335 25	fitting piece -H-		1	
(11)	928 612 335 25	fitting piece -J-		1	
(11)	928 612 335 25	fitting piece -K-		1	
(11)	928 612 335 25	fitting piece -L-		1	
(11)	928 612 335 25	fitting piece -M-		1	
(11)	928 612 335 25	fitting piece -N-		1	

Pos	Part Number	Name	Remarks	Qty	Model	Pos	Part Number	Name	Remarks	Qty	Model
(11)	928 612 335 25	fitting piece -O-		1							
(11)	928 612 335 25	fitting piece -P-		1							
(11)	928 612 335 25	fitting piece -Q-		1							
(11)	928 612 335 25	fitting piece -R-		1							
(11)	928 612 335 25	fitting piece -S-		1							
(11)	928 612 335 25	fitting piece -T-		1							
(11)	928 612 335 25	fitting piece -U-		1							
(11)	928 612 335 25	fitting piece -V-		1							
(11)	928 612 335 25	fitting piece -W-		1							
		- -- E N D -- -									

Model	Year	MG	SG	Illustration	Restrictions	Update	15:07	01.09.2004	PORSCHE	PET	PORSCHE
928	86	9	04	904-00		179					

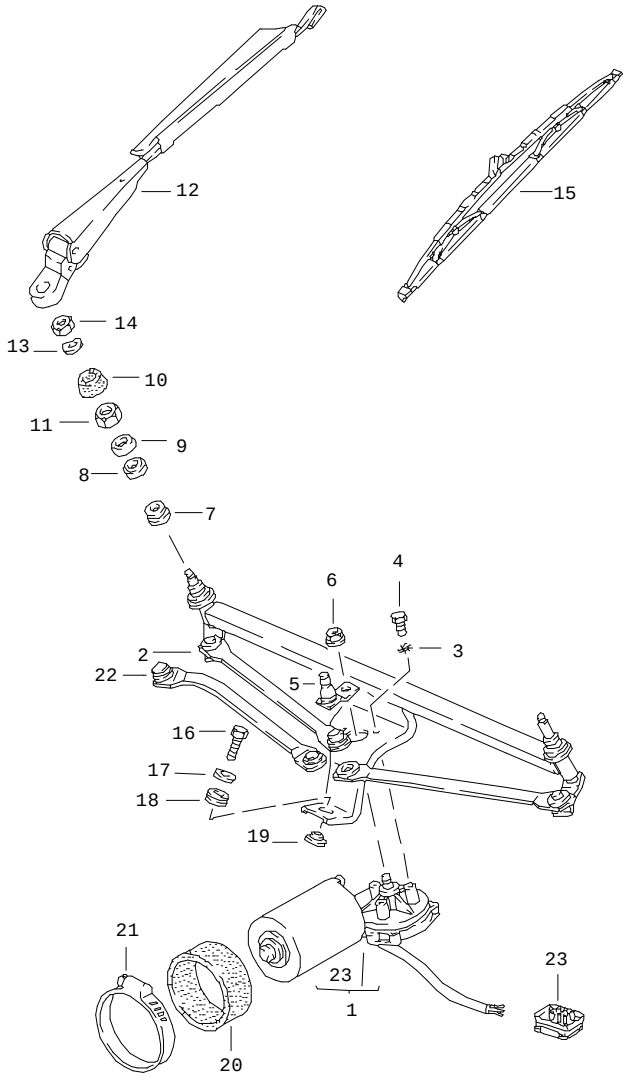

Pos	Part Number	Name	Remarks	Qty	Model
		windscreen wiper system			
1	928 628 303 02	wiper motor	/LL -84	1	
1	928 628 303 01	wiper motor	/RL 83	1	
(1)	927 628 303 01	wiper motor	/RL 84	1	
(1)	944 628 303 01	wiper motor	/LL 85-	1	
(1)	927 628 303 03	wiper motor	/RL 85-	1	
2	928 628 932 00	crank drive	/LL -84	1	
(2)	927 628 221 00	crank drive	/RL 83	1	
(2)	927 628 932 00	crank drive	/RL 84	1	
(2)	928 628 221 01	crank drive	/LL 85-	1	
(2)	927 628 221 01	crank drive	/RL 85-	1	
3	N 042 121 3	shake-proof washer	/LL -84	3	
4	999 072 005 09	hexagon-head bolt M 6 X 12	-84	3	
(4)	900 278 002 02	hexagon-head bolt CM 6 X 16	85-	3	
5	928 628 243 01	lever	/LL -84	1	
(5)	928 628 233 02	lever	/RL 83	1	
(5)	928 628 243 01	lever	/RL 84	1	
(5)	928 628 243 02	lever	85-	1	
6	999 084 055 02	lock nut M 8		1	
7	901 628 924 00	rubber bush	-84	2	
(7)	944 628 129 00	rubber bush	85-	2	
8	901 628 923 01	rubber bush	-84	2	
(8)	944 628 128 00	bush	85-	2	
9	911 628 963 00	washer	-84	2	
(9)	944 628 125 00	washer	85-	2	
10	928 628 716 02	grommet	/R	1	

Pos	Part Number	Name	Remarks	Qty	Model
(10)	928 628 717 01	grommet	/L	1	
11	477 955 149	hexagon nut	-84	2	
(11)	999 034 013 02	hexagon nut	85-	2	
12	928 628 213 05	wiper arm passenger's side	/LL	1	
(12)	927 628 213 02	wiper arm	/RL	2	
12	928 628 213 06	wiper arm driver's side with spoiler	/LL	1	
-	928 628 623 00	cap		2	
13	803 955 437	washer		2	
14	N 011 151 2	hexagon nut	-84	2	
(14)	900 076 025 02	hexagon nut	85-	2	
15	478 955 425	wiper blade		2	
(15)	478 955 425	wiper blade passenger's side	/RL 86	1	
(15)	928 628 217 03	wiper blade driver's side with spoiler	/RL 86	1	
16	900 075 014 02	hexagon-head bolt M 6 X 18	-84	1	
(16)	N 010 217 9	hexagon-head bolt M 6 X 20	85-	1	
17	N 011 666 7	washer	-84	1	
(17)	N 902 707 01	washer 6,1 X 18 X 1,5	85-	1	
18	928 628 287 00	grommet		1	
19	928 628 289 00	bush		1	
20	E 928 628 759 00	rubber strap	/RL 83	1	
21	E 999 512 371 02	hose clamp	/RL 83	1	
-	999 507 246 02	speed nut M 6		1	
22	928 628 915 00	rod for wiper motor right F 92 ES0524 F 92 ES0525 F 92 ES0527 F 92 ES0528 F 92 ES0536 F 92 ES0540 F 92 ES0544 F 92 ES0545 F 92 ES0546	/RL	1	
23	911 612 867 02	connector	85-	1	

- -- E N D -- -

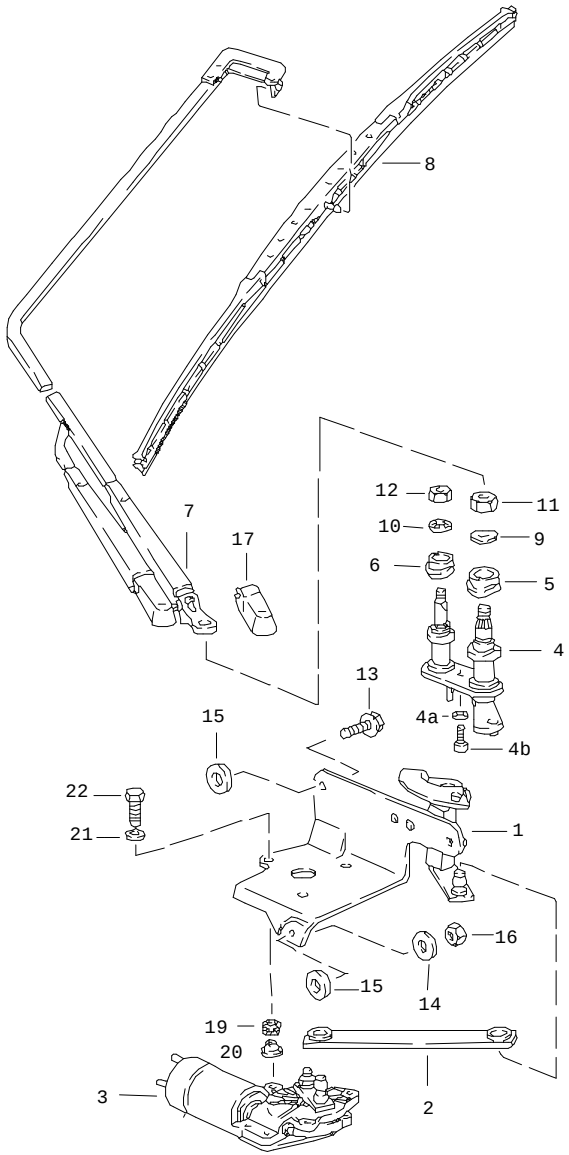

Pos	Part Number	Name	Remarks	Qty	Model
		rear window wiper			
1	928 628 071 03	motor console with bearing		1	
2	928 628 202 02	joint rod		1	
3	928 628 403 02	wiper motor		1	
4	928 628 309 02	wiper bearing		1	
4B	900 075 057 02	hexagon-head bolt		1	
5	928 628 325 01	bush		1	
6	928 628 326 01	bush		1	
7	928 628 610 05	wiper arm		1	
8	928 628 218 01	wiper blade		1	
9	N 012 241 8	spring washer B 8		1	
10	900 114 002 02	shake-proof washer J 6,4		1	
11	900 076 025 02	hexagon nut M 8		1	
12	900 076 010 02	hexagon nut M 6		1	
13N	900 075 338 02	hexagon-head bolt M 6 X 25		2	
14	N 012 007 2	lock ring A 6		2	
14	N 011 524 7	washer 6,4 X 14		3	
15	N 011 666 7	washer 6,4		X	
16	900 910 009 02	lock nut M 6		1	
(17)	928 628 623 00	cap only together with rear spoiler		2	

Pos	Part Number	Name	Remarks	Qty	Model	Pos	Part Number	Name	Remarks	Qty	Model
		relay rear window wiper see group 9/03/10									
19	928 628 287 00	grommet		3							
20	928 628 289 00	bush		3							
21	N 011 524 7	washer 6,4		3							
22	900 075 014 02	hexagon-head bolt M 6 X 18		3							
		- -- E N D -- -									

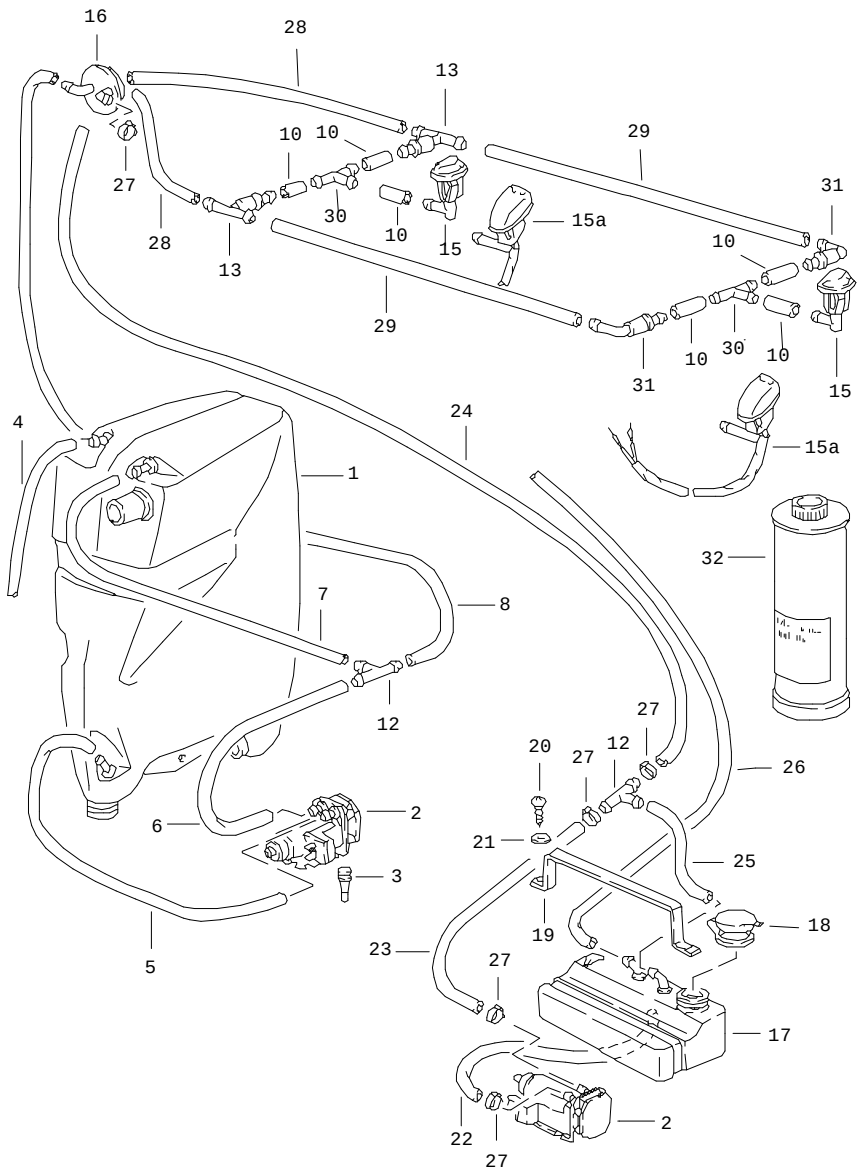

Pos	Part Number	Name	Remarks	Qty	Model
		windscreen washer system			
1	A 928 528 975 01	water reservoir		1	
(1)	928 528 975 01	water reservoir		1	
2	928 628 074 01	pump		2	
3	914 628 741 00	plug motor pump		3	
-	999 181 029 40	hose 4 X 2,5		*	
4	.	320 MM		1	
5	.	620 MM		1	
6	.	100 MM		1	
7	.	400 MM		1	
8	.	450 MM	/LL	1	
-	.	1170 MM		1	
10	.	25 MM		1	
12	901 628 749 20	t-piece	/RL	2	
13	914 628 433 00	valve		2	
14	914 628 215 00	valve		1	
15	928 628 079 00	nozzle	-83	2	
15A	928 628 077 00	nozzle	84-	2	
	01C	black heatable			
-	171 971 998 A	connector housing 2-pole	/L	1	
-	171 971 998 B	connector housing 3-pole	/R	1	
-	999 651 154 40	cable tie		4	
16	928 528 073 04	hose connection	/LL	1	
(16)	927 528 073 04	hose connection	/RL	1	
17	928 628 091 00	container		1	

Pos	Part Number	Name	Remarks	Qty	Model
18	928 528 183 03	cover		1	
19	928 628 189 00	restraining strap		1	
20	900 143 031 02	oval-head sheetmetal screw 4,2 X 9,5		2	
-	999 181 722 40	hose 4,6 X 1,8		*	
22	.	145 MM		1	
23	.	300 MM		1	
24	.	1860 MM		1	
25	.	250 MM		1	
26	.	1060 MM	/LL	1	
26	.	2260 MM	/RL	1	
27	999 512 069 02	hose clamp		5	
-	999 181 029 40	hose 4 X 2,5		*	
28	.	140 MM		2	
29	.	650 MM		2	
30	E 901 628 745 20	t-socket		2	
31	477 955 481	valve		2	
32	928 628 931 00	silicone remover 1000 CCM		X	
		mounting parts motor pump			
-	927 628 471 00	support		1	
-	901 511 791 21	rubber washer 2 X 4		2	
-	999 507 240 00	speed nut B 4,2	/LL /RL 83	2	
-	999 591 850 02	speed nut with cover	/RL 84-	2	

Pos	Part Number	Name	Remarks	Qty	Model
-	N 020 301 1	hose 10 MM		2	
-	900 025 002 02	washer		2	
-	900 187 013 02	tapping screw 4,2 X 13		2	
-	928 628 757 00	grommet for hose		1	
		- -- E N D -- -			

Model	Year	MG	SG	Illustration	Restrictions	Update	15:09	01.09.2004	PORSCHE	PET	PORSCHE
928	86	9	04	904-15		179					

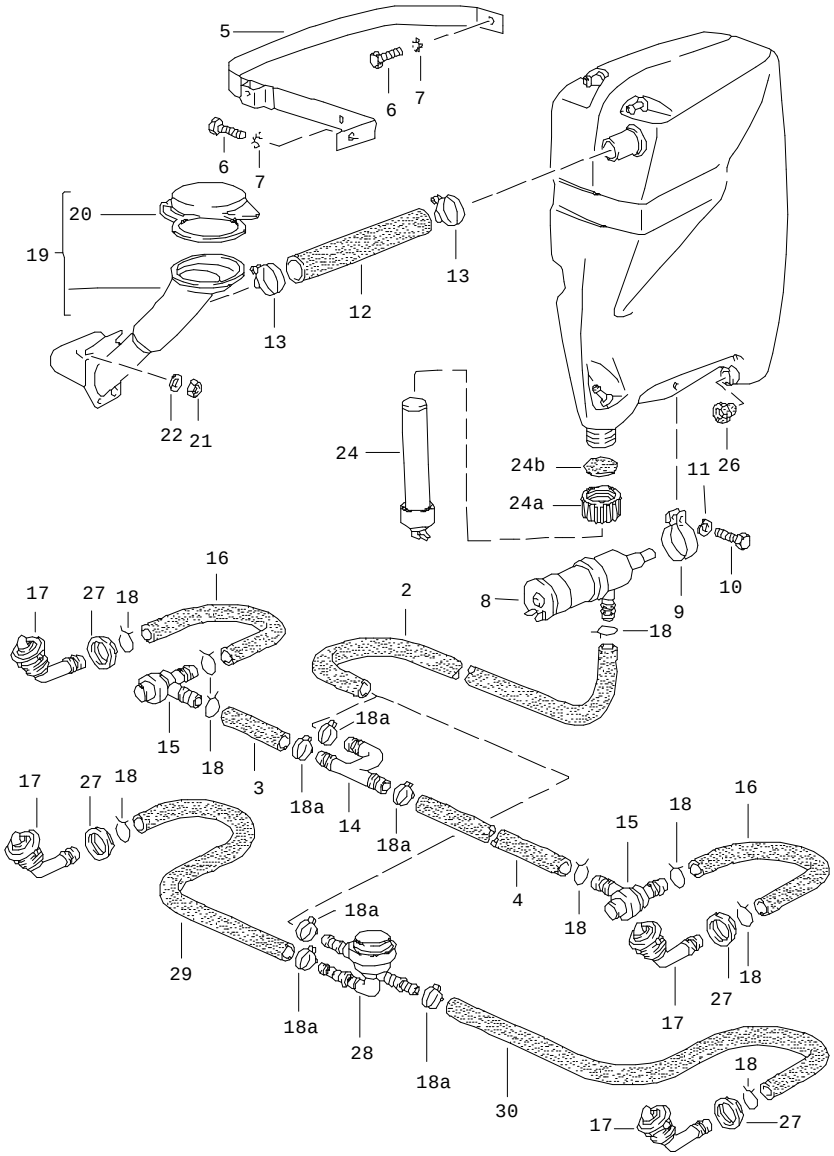

Pos	Part Number	Name	Remarks	Qty	Model
		headlight washer system			
1	A 928 628 075 03	water reservoir		1	
(1)	928 528 975 01	water reservoir		1	
(2)	999 181 806 40	hose 2300 MM		1	
5	928 628 087 00	restraining strap	-84	1	
(5)	928 628 087 01	restraining strap	85-	1	
6	900 075 085 02	hexagon-head bolt M 8 X 20		2	
7	E 900 115 004 01	serrated lock washer 8,4		2	
8	191 955 681	pump		1	
9	928 628 085 00	restraining strap		1	
10	900 075 014 02	hexagon-head bolt M 6 X 18		1	
11	N 011 524 7	washer 6,4		1	
-	999 181 286 50	hose 28 X 3,5		*	
12	-	270 MM		1	
13	999 512 272 02	hose clamp		2	
14	914 628 413 10	distributing piece		1	
15	477 955 183	pressure control valve F >>92ES8 40148 F >>92ES8 49566		2	 (J)
16	928 528 161 02	hose C 9 X 15 F >>92ES8 40148 F >>92ES8 49566		2	 (J)
17	928 528 071 02	jet carrier		2	
18	999 512 304 02	hose clamp		X	
18A	N 023 569 2	hose clamp		3	
19	928 628 179 00	filler neck	/LL 83	1	

Pos	Part Number	Name	Remarks	Qty	Model
(19)	928 628 179 00	filler neck	/LL 84-	1	
(19)	928 528 179 01	filler neck	/LL 85-	1	
(19)	927 528 085 02	filler neck	/RL	1	
20	928 528 181 02	cover		1	
21	900 076 010 02	hexagon nut M 6	/LL 83	2	
21	900 076 010 02	hexagon nut M 6	/RL	2	
21A	N 043 890 1	tapping screw B 4,2 X 9,5	/LL 84-	2	
22	900 151 003 02	washer 6,4	/LL 83	2	
22	900 151 003 02	washer 6,4	/RL	2	
(22)	900 025 002 02	washer A 4,3	/LL 84-	2	
24	928 641 501 01	tank gauge		1	
24A	928 628 735 00	cap		1	
24B	928 628 737 00	sealing ring		1	
26	928 628 193 00	gasket		1	
27	900 281 002 40	hexagon nut PG 11		2	
-	927 612 463 00	grommet		1	
-	927 528 181 02	filling hose	/RL	1	
-	927 528 179 02	support filler neck	/RL	1	
-	999 512 084 02	hose clamp	/RL	1	
-	999 512 084 02	hose clamp	/LL	2	
28	281 955 187	valve F 92ES8 40149>> F 92ES8 49567>>		1	
29	999 181 806 40	hose 400 MM F 92ES8 40149>> F 92ES8 49567>>		1	(J)
30	999 181 806 40	hose 900 MM F 92ES8 40149>> F 92ES8 49567>>		1	

- -- E N D -- -

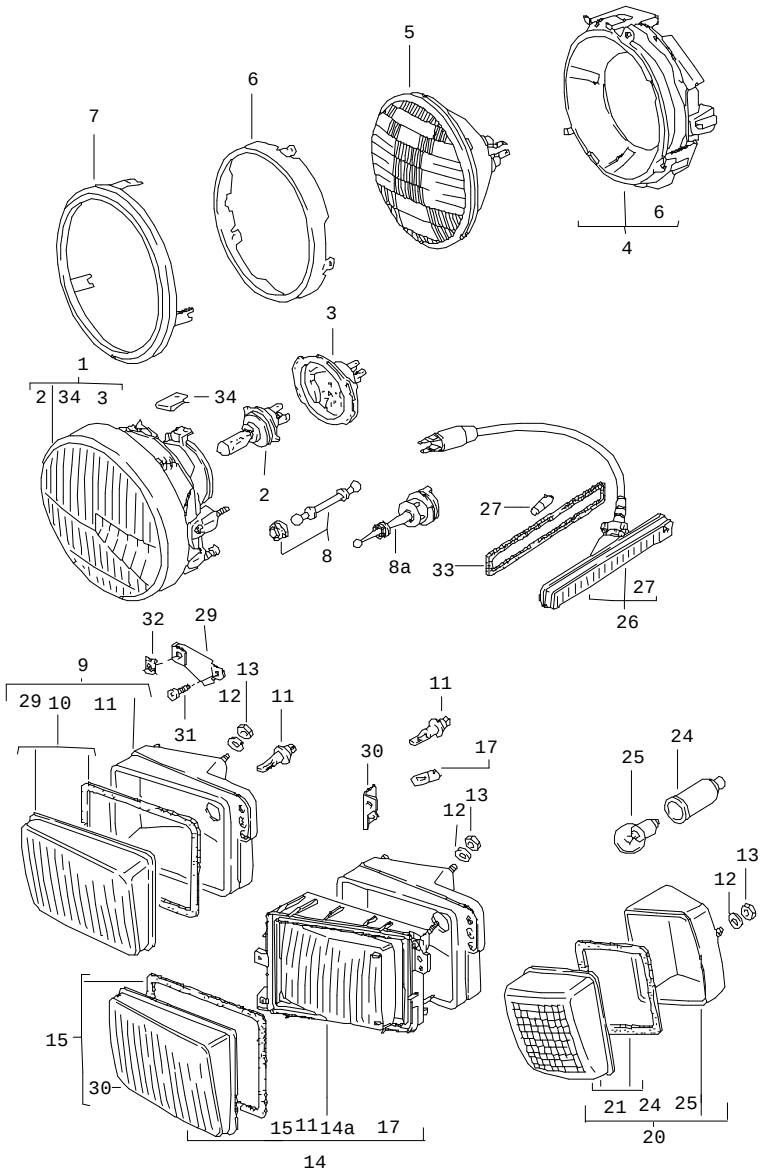

Pos	Part Number	Name	Remarks	Qty	Model
		headlamp direction indicator light front			
1	928 631 101 03	headlamp H-4	/LL	2	
(1)	928 631 102 01	headlamp H-4	/RL	2	M 492
2	999 631 202 90	halogen bulb H-4		2	
(2)	999 631 202 91	halogen bulb H-4		2	(F)
(1)	928 631 101 04	headlamp H-4	86	2	(F)
3	928 631 923 00	protective cap		2	
4	928 631 113 01	retaining frame	-85	2	(J)
5	999 631 121 90	headlamp unit sealed-beam 12 V 60/45 W	-85	2	(J)
6	901 631 102 03	glass plate	-85	2	(J)
7	928 750 327 03	intermediate ring	-85	2	(J)
8	928 631 203 03	bolt		2	
8A	928 631 201 02	support		2	
9	928 631 414 01	high-beam headlight	/L	1	
(9)	928 631 414 00	high-beam headlight	/R	1	
(9)	928 631 415 01	high-beam headlight	/L	1	(F)
(9)	928 631 415 00	high-beam headlight	/R	1	(F)
10	928 631 927 00	lens	/L	1	
(10)	928 631 928 00	lens	/R	1	
(10)	928 631 927 02	lens	/L	1	(F)
(10)	928 631 928 02	lens	/R	1	(F)
11	900 631 126 90	halogen bulb H 3, 12 V - 55 W		4	

Pos	Part Number	Name	Remarks	Qty	Model
12	N 011 665 3	washer		20	
13	900 910 009 02	lock nut		20	
14	928 631 416 01	fog headlamp	/L	1	
(14)	928 631 416 00	fog headlamp	/R	1	
(14)	928 631 418 01	fog headlamp	/L	1	(F)(E)
(14)	928 631 418 00	fog headlamp	/R	1	(F)(E)
14A	928 631 947 00	retaining frame with lens inner		2	
15	928 631 925 00	lens	/L	1	
(15)	928 631 926 00	lens	/R	1	
(15)	928 631 925 02	lens	/L	1	(F)
(15)	928 631 926 02	lens	/R	1	(F)
17	900 631 103 90	bulb 12 V - 4 W		2	
20	E 928 631 421 01	direction indicator light	/L	1	
(20)	928 631 421 00	direction indicator light	/R	1	
21	928 631 929 00	lens	/L	1	
21	928 631 930 00	lens	/R	1	
24	311 971 867 A	protection cap		2	
25	900 631 127 90	bulb 12 V - 21 W		2	
26	928 631 410 01	side turn signal		2	
-	999 507 252 02	nut		2	
27	900 631 103 90	bulb 12 V - 4 W		2	
29	928 631 435 00	support		2	
30	928 631 437 01	support		2	
31	N 014 133 8	oval-head screw M 5 X 12		4	
32	999 591 338 02	speed nut		4	
33	928 631 448 00	gasket		2	
34	999 591 751 02	speed nut B 3,9	86	6	
		headlight levelling system see group 8/06/00			
		- -- E N D -- -			

Model	Year	MG	SG	Illustration	Restrictions	Update	15:09	01.09.2004	PORSCHE	PET	PORSCHE
928	86	9	05	905-06		179					

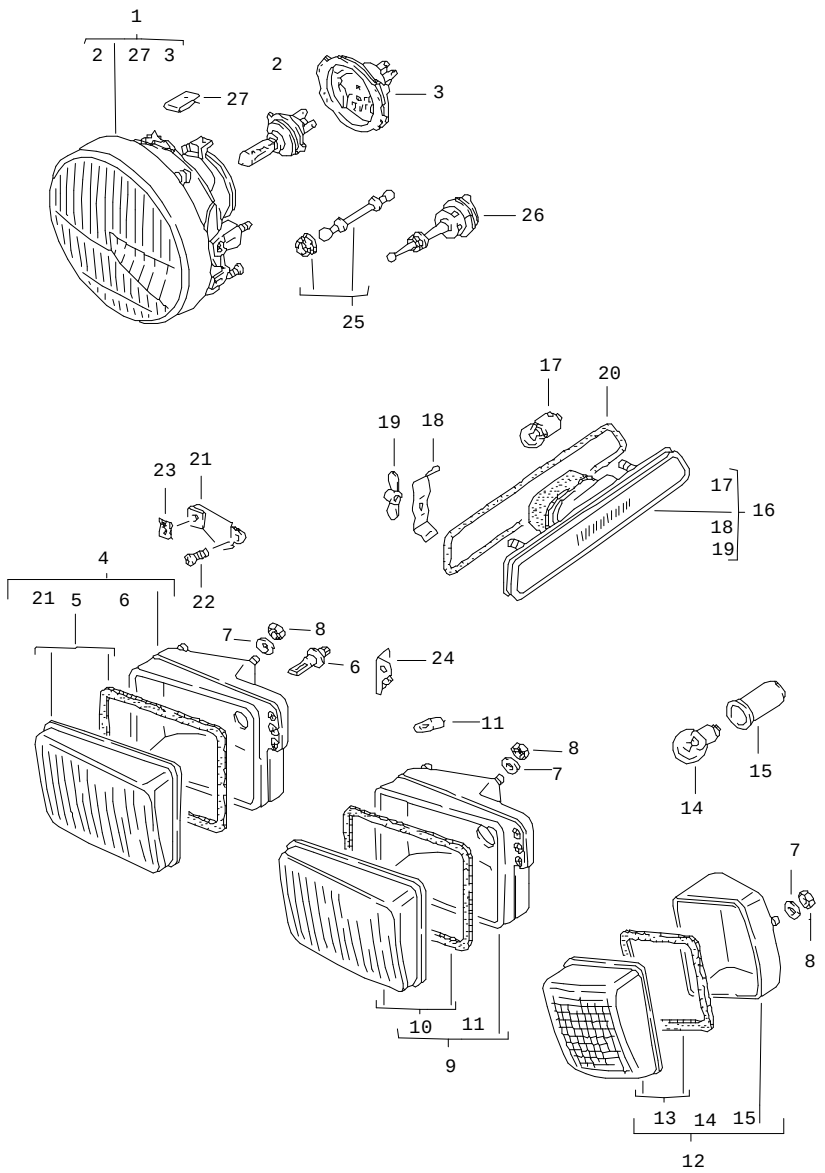

Pos	Part Number	Name	Remarks	Qty	Model
		headlamp direction indicator light front (SA) F >>92FS8 40666 F 92FS8 40667>> see group 9/05/00			M 215
1	928 631 101 03	headlamp H-4		2	
2	999 631 202 90	halogen bulb H-4		2	
3	928 631 923 00	protective cap		2	
4	928 631 417 01	fog headlamp	/L	1	
(4)	928 631 417 00	fog headlamp	/R	1	
5	928 631 925 01	lens	/L	1	
(5)	928 631 926 01	lens		1	
6	900 631 126 90	halogen bulb H-3		2	
7	N 011 665 3	washer A 5,3		20	
8	900 910 009 02	lock nut NM 5		20	
9	928 631 443 00	position light	/L	1	
(9)	928 631 444 00	position light	/R	1	
12	928 631 945 00	lens	/L	1	
(10)	928 631 946 00	lens	/R	1	
11	900 631 104 90	bulb 12V 5 W		2	
12	E 928 631 421 01	direction indicator light	/L	1	
(12)	928 631 421 00	direction indicator light	/R	1	
13	928 631 929 00	lens	/L	1	
(13)	928 631 930 00	lens	/R	1	

Pos	Part Number	Name	Remarks	Qty	Model
14	900 631 127 90	bulb 12 V-21 W		2	
15	311 971 867 A	protection cap		2	
16	928 631 411 02	side marker light	/L	1	
(16)	928 631 412 02	side marker light	/R	1	
17	900 631 104 90	bulb 12 V - 5 W		2	
18	928 631 431 01	support		4	
19	900 029 001 10	winged nut M 5		4	
20	928 025 255 00	edge protection profile		2	
21	928 631 435 00	support		2	
22	N 014 133 8	oval-head screw M 5 X 12		2	
23	999 591 338 02	speed nut 3,5		2	
24	928 631 437 00	support		2	
25	928 631 203 03	bolt		2	
26	928 631 201 02	support		2	
27	999 591 751 02	speed nut B 3,9		6	
		- -- E N D -- -			

Pos	Part Number	Name	Remarks	Qty	Model

Model	Year	MG	SG	Illustration	Restrictions	Update	15:09	01.09.2004	PORSCHE	PET	PORSCHE
928	86	9	05	905-10		179					

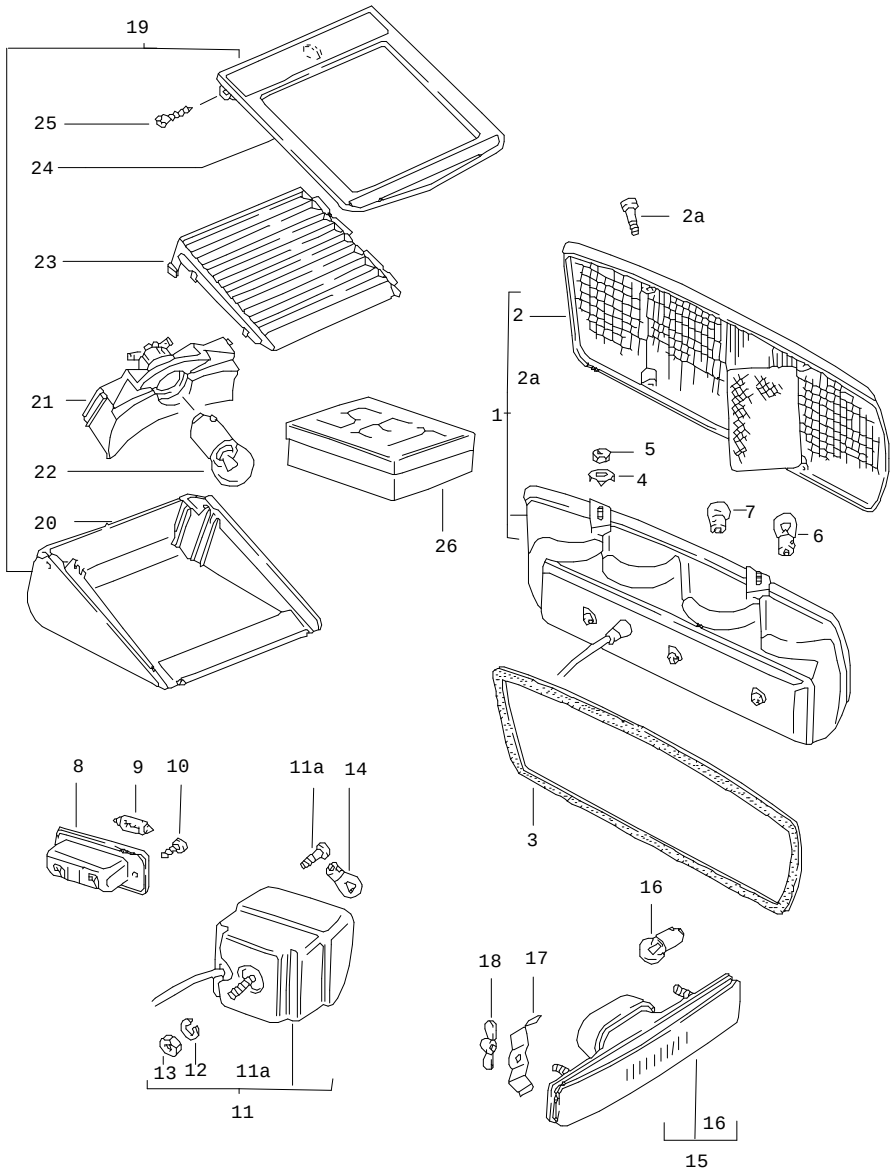

Pos	Part Number	Name	Remarks	Qty	Model
		rear light			
1	928 631 931 02	rear light	/L	1	
(1)	928 631 932 02	rear light	/R	1	
(1)	928 631 931 03	rear light F >>92FS8 40666	/L	1	M 215
(1)	928 631 931 02	rear light F 92FS8 40667>>	/L	1	M 215
(1)	928 631 932 03	rear light F >>92FS8 40666	/R	1	M 215
(1)	928 631 932 02	rear light F 92FS8 40667>>	/R	1	M 215
(1)	928 631 931 04	rear light	/L	1	(J)
(1)	928 631 932 04	rear light	/R	1	(J)
2	928 631 933 02	lens	/L	1	
(2)	928 631 934 02	lens	/R	1	
(2)	928 631 933 03	lens F >>92FS8 40666	/L	1	M 215
(2)	928 631 933 02	lens F 92FS8 40667>>	/L	1	M 215
(2)	928 631 934 03	lens F >>92FS8 40666	/R	1	M 215
(2)	928 631 934 02	lens F 92FS8 40667>>	/R	1	M 215
(2)	928 631 933 04	lens	/L	1	(J)
(2)	928 631 934 04	lens	/R	1	(J)
2A	928 631 941 00	screw 4,2 X 32		8	
3	928 631 924 00	gasket		1	
4	928 631 439 00	washer		8	
5	900 910 009 02	lock nut NM 5		8	

Pos	Part Number	Name	Remarks	Qty	Model
6	900 631 127 90	bulb 12 V - 21 W direction indicator light back-up light brake light		6	
7	900 631 115 90	bulb 12 V - 10 W		2	
8	928 631 620 00	license plate light	/H	2	
9	900 631 105 90	bulb 12 V - 5 W		2	
10	900 145 044 07	tapping screw B 4,2 X 22		4	
11	A 928 631 935 02	rear fog light	/L -83	1	
(11)	A 928 631 935 02	rear fog light	/L 84-	1	
(11)	A 928 631 936 02	rear fog light	/R -83	1	
(11)	A 928 631 936 02	rear fog light	/R 84-	1	
(11)	928 631 935 02	rear fog light	/L 83-	1	
(11)	928 631 936 02	rear fog light	/R 83-	1	
11A	928 631 943 00	screw 3,9 X 22		2	
12	N 012 006 4	lock ring B 6		2	
13	900 076 010 02	hexagon nut M 6		2	
14	900 631 127 90	bulb 12 V - 21 W		1	
		- -- E N D -- -			

Pos	Part Number	Name	Remarks	Qty	Model

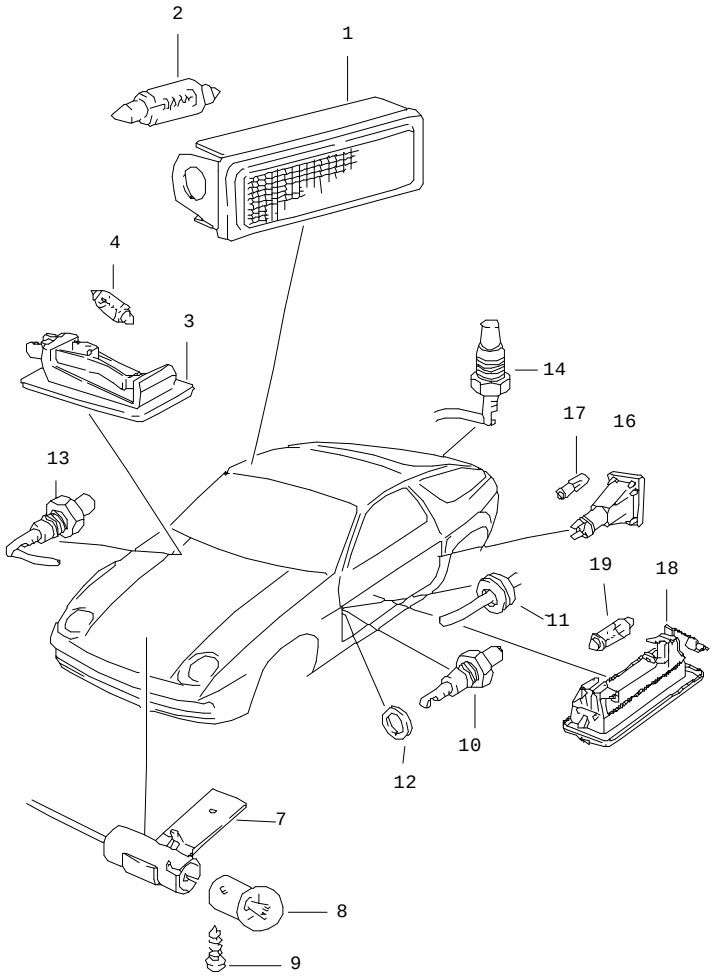

Pos	Part Number	Name	Remarks	Qty	Model
		interior lights			
1	911 632 102 00	light front rear rear lid		3 1 1 1	
2	900 631 106 90	linolite lamp 12 V - 10 W		3	
3	928 632 101 00	glove compartment light		1	
4	999 631 018 90	bulb 12 V - 3 W		1	
7	E 928 632 105 00	engine compartment lamp	-83	1	
(7)	E 928 632 105 01	engine compartment lamp	84-	1	
8	900 631 115 90	bulb 12 V - 10 W		1	
9	N 013 970 5	tapping screw B 4,8 X 9,5		1	
10	964 613 601 00	door contact switch		2	
11	321 971 905	rubber sleeve		2	
12	900 031 001 60	washer 8,4		2	
13	964 613 601 00	door contact switch glove compartment		1	
14	928 613 119 00	door contact switch rear lid		1	
-	900 631 102 90	bulb 12 V - 2 W cigarette lighter		3	
16	928 631 131 00	door guard light		2	
17	900 631 120 90	bulb 12 V - 2 W		2	
18	928 632 109 01	floor light		2	
19	900 631 106 90	linolite lamp 12 V - 10 W		2	
		- -- E N D -- -			

Model	Year	MG	SG	Illustration	Restrictions	Update				
928	86	9	06	906-00		179	15:10	01.09.2004	PORSCHE	PET	PORSCHE

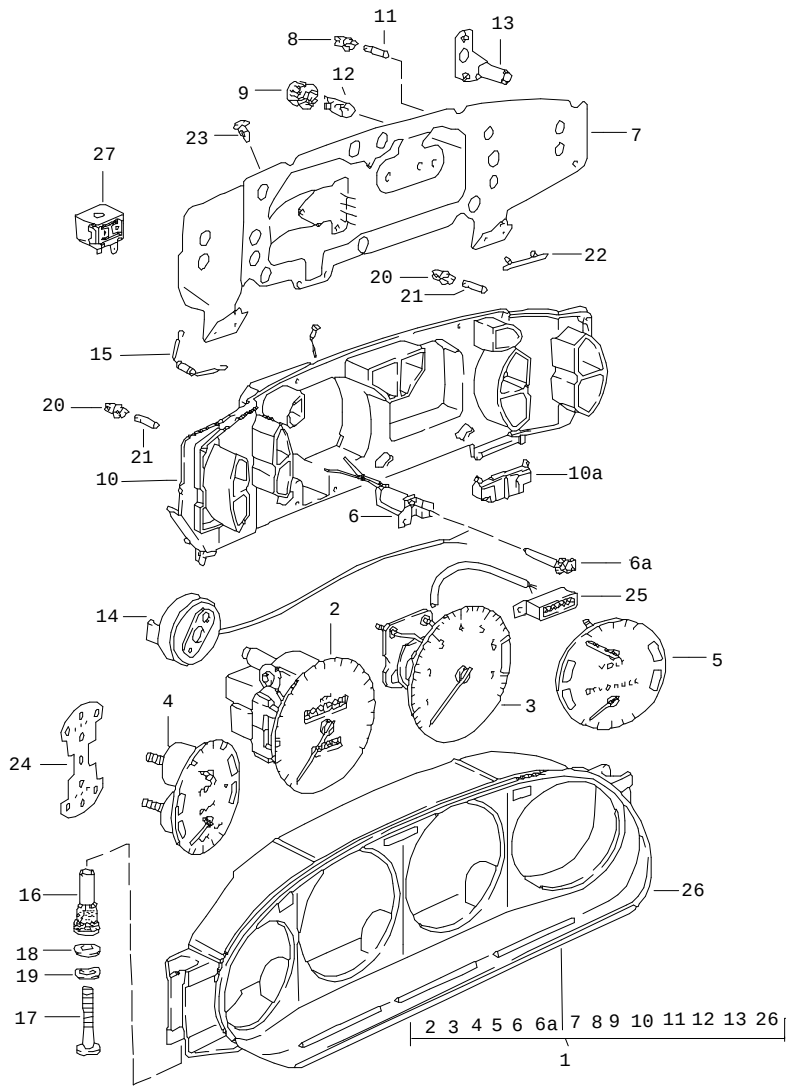

Pos	Part Number	Name	Remarks	Qty	Model
		instrument cluster			
1	928 641 103 31	instrument cluster	83	1	(D)
2	928 641 967 00	speedometer		1	
3	928 641 965 01	tachometer		1	
4	E 928 641 933 01	indicator - temperat. - fuel gauge -		1	
5	928 641 961 01	indicator - volt - oil -		1	
(1)	928 641 104 33	instrument cluster	83	1	(F)
2	928 641 967 00	speedometer		1	
3	928 641 965 06	tachometer		1	
4	928 641 949 01	indicator - temperat. - fuel gauge -		1	
5	928 641 962 01	indicator - volt - oil -		1	
(1)	928 641 106 33	instrument cluster	83	1	(B)(L)(NL)
2	928 641 967 00	speedometer		1	(A)(CH)(S)
3	928 641 965 06	tachometer		1	(DK)(I)(N)
4	E 928 641 933 01	indicator - temperat. - fuel gauge -		1	(SF)
5	928 641 961 01	indicator - volt - oil -		1	
(1)	928 641 116 33	instrument cluster	83	1	(GB)
2	928 641 957 00	speedometer		1	
3	928 641 965 06	tachometer		1	
4	928 641 943 01	indicator - temperat. - fuel gauge -		1	
5	928 641 963 01	indicator - volt - oil -		1	
(1)	928 641 107 33	instrument cluster	83	1	(J)
2	928 641 969 00	speedometer		1	

Pos	Part Number	Name	Remarks	Qty	Model
3	928 641 965 06	tachometer		1	
4	928 641 943 01	indicator - temperat. - fuel gauge -		1	
5	928 641 963 01	indicator - volt - oil -		1	
		valid for all countries not specif.			
(1)	928 641 109 33	instrument cluster	83	1	
2	928 641 967 00	speedometer		1	
3	928 641 965 06	tachometer		1	
4	928 641 943 01	indicator - temperat. - fuel gauge -		1	
5	928 641 963 01	indicator - volt - oil -		1	
1	E 928 641 103 34	instrument cluster	84	1	(D)
2	928 641 967 00	speedometer		1	
3	928 641 965 09	tachometer		1	
4	928 641 933 02	indicator fuel/oil temperature gauge		1	
5	928 641 961 02	indicator - volt - oil -		1	
(1)	928 641 104 34	instrument cluster	84	1	(F)
2	928 641 967 00	speedometer		1	
3	928 641 965 08	tachometer		1	
4	928 641 949 01	fuel/oil temperature gauge		1	
5	928 641 962 02	indicator - volt - oil -		1	
(1)	928 641 106 34	instrument cluster	84	1	(B)(L)(NL)
2	928 641 967 00	speedometer		1	(A)(CH)(S)
3	928 641 965 08	tachometer		1	(DK)(I)(N)
4	928 641 933 02	indicator - temperat. - fuel gauge -		1	(SF)
5	928 641 961 02	indicator - volt - oil -		1	
(1)	928 641 116 34	instrument cluster	84	1	(GB)
2	928 641 957 00	speedometer		1	(HK)
3	928 641 965 08	tachometer		1	
4	928 641 943 01	indicator - temperat. - fuel gauge -		1	
5	928 641 963 02	indicator - volt - oil -		1	
(1)	928 641 107 34	instrument cluster	84	1	(J)
2	928 641 967 02	speedometer		1	
3	928 641 965 06	tachometer		1	
4	928 641 943 01	indicator - temperat. - fuel gauge -		1	
5	928 641 963 02	indicator - volt - oil -		1	
(1)	928 641 117 34	instrument cluster	84	1	M 215
2	928 641 967 01	speedometer		1	
3	928 641 965 08	tachometer		1	
4	928 641 943 01	indicator - temperat. - fuel gauge -		1	
5	928 641 963 02	indicator - volt - oil -		1	
		valid for all countries not specif.			
(1)	928 641 114 34	instrument cluster	84	1	
2	928 641 967 00	speedometer		1	
3	928 641 965 08	tachometer		1	
4	928 641 943 01	indicator - temperat. - fuel gauge -		1	
5	928 641 963 02	indicator - volt - oil -		1	

Pos	Part Number	Name	Remarks	Qty	Model
(1)	928 641 103 36	instrument cluster	85-	1	(D)M 481
2	928 641 967 00	speedometer		1	
3	928 641 965 10	tachometer consumption indicator		1	
4	928 641 933 03	indicator - temperat. - fuel gauge -		1	
5	928 641 961 03	indicator - volt - oil -		1	
(1)	928 641 133 02	instrument cluster	85-	1	(D)M 249
2	928 641 967 04	speedometer		1	
3	928 641 965 11	tachometer consumption indicator		1	
4	928 641 933 03	indicator - temperat. - fuel gauge -		1	
5	928 641 961 03	indicator - volt - oil -		1	
(1)	928 641 104 36	instrument cluster	85-	1	(F)M 481
2	928 641 967 00	speedometer		1	
3	928 641 965 12	tachometer		1	
4	928 641 949 02	indicator - temperat. - fuel gauge -		1	
5	928 641 962 03	indicator - volt - oil -		1	
(1)	928 641 134 02	instrument cluster	85-	1	(F)M 249
2	928 641 967 04	speedometer		1	
3	E 928 641 965 14	tachometer		1	
4	928 641 949 02	indicator - temperat. - fuel gauge -		1	
5	928 641 962 03	indicator - volt - oil -		1	
(1)	928 641 106 36	instrument cluster	85-	1	M 481 (A)(S)(CH) (D)(I)(N) (SF) (B)(L)(NL)
2	928 641 967 00	speedometer		1	
3	928 641 965 12	tachometer		1	
4	928 641 933 03	indicator - temperat. - fuel gauge -		1	
5	928 641 961 03	indicator - volt - oil -		1	
(1)	928 641 136 02	instrument cluster	85-	1	M 249 (A)(CH)(S) (D)(I)(N) (SF) (B)(L)(NL)
2	928 641 967 04	speedometer		1	
3	E 928 641 965 14	tachometer		1	
4	928 641 933 03	indicator - temperat. - fuel gauge -		1	
5	928 641 961 03	indicator - volt - oil -		1	
(1)	928 641 116 36	instrument cluster	85-	1	M 481
2	928 641 957 00	speedometer		1	(GB)(HK)
3	928 641 965 12	tachometer		1	
4	928 641 943 02	indicator - temperat. - fuel gauge -		1	
5	928 641 963 03	indicator - volt - oil -		1	
(1)	928 641 108 36	instrument cluster	85-	1	M 249
2	928 641 957 02	speedometer		1	(GB)(HK)
3	E 928 641 965 14	tachometer		1	
4	928 641 943 02	indicator - temperat. - fuel gauge -		1	

Pos	Part Number	Name	Remarks	Qty	Model
5	928 641 963 03	indicator - volt - oil -		1	
(1)	928 641 127 02	instrument cluster	85-	1	(J)M 249
2	928 641 967 05	speedometer		1	
3	E 928 641 965 14	tachometer		1	
4	928 641 943 02	indicator - temperat. - fuel gauge -		1	
5	928 641 963 03	indicator - volt - oil -		1	
(1)	928 641 117 36	instrument cluster	85-	1	(SA)M 481
2	928 641 967 03	speedometer		1	
3	928 641 965 12	tachometer		1	
4	928 641 943 02	indicator - temperat. - fuel gauge -		1	
5	928 641 963 03	indicator - volt - oil -		1	
(1)	928 641 137 02	instrument cluster	85-	1	(SA)M 249
2	928 641 967 06	speedometer		1	
3	E 928 641 965 14	tachometer		1	
4	928 641 943 02	indicator - temperat. - fuel gauge -		1	
5	928 641 963 03	indicator - volt - oil -		1	
		valid for all countries not specif.			
(1)	928 641 114 36	instrument cluster	85-	1	M 481
2	928 641 967 00	speedometer		1	
3	928 641 965 12	tachometer		1	
4	928 641 943 02	indicator - temperat. - fuel gauge -		1	
5	928 641 963 03	indicator - volt - oil -		1	

Pos	Part Number	Name	Remarks	Qty	Model
(1)	928 641 124 02	instrument cluster	85-	1	M 249
2	928 641 967 04	speedometer		1	
3	E 928 641 965 14	tachometer		1	
4	928 641 943 02	indicator - temperat. - fuel gauge -		1	
5	928 641 963 03	indicator - volt - oil -		1	
6	928 641 921 00	solenoid coil tripmeter		1	
6A	928 641 960 00	zero adjustment shaft tripmeter		1	
(7)	E 928 641 973 01	printed circuit film	-84	1	
(7)	928 641 973 02	printed circuit film	85-	1	
8	999 631 301 90	bulb (1,2 W)		19	
9	928 641 927 00	bulb holder (3,0 W)		4	
10	928 641 968 00	plate	-84	1	
(10)	928 641 968 01	plate	85-	1	
10A	928 641 975 00	plug with guide 14-pole	-84	X	
10A	928 641 977 00	plug with guide 12-pole	-84	X	
11	999 631 301 90	bulb 12 V-1,2 W 2LH3490		19	
12	900 631 019 90	bulb 12 V-3 W		4	
13	928 641 958 00	printed circuit board temperature gauge fuel-level indicator charging control indicator		3	
(13)	928 641 959 00	printed circuit board oil pressure indicator		1	
14	928 606 210 00	pulse sender	-84	1	

Pos	Part Number	Name	Remarks	Qty	Model
(14)	928 606 210 01	pulse sender	85-	1	
15	928 641 981 00	resistor charging control indicator		1	
(15)	928 641 981 01	resistor	85-	1	
16	928 552 049 02	spacer sleeve		4	
17	N 019 908 1	pan-head screw M 6 X 100		2	
18	N 011 524 7	washer A 6,4		2	
19	N 012 226 5	spring washer B 6		2	
20	928 641 982 00	bulb holder	85-	4	
21	928 641 983 00	bulb 1,2 W	85-	4	
22	928 641 985 00	clip	85-	3	
23	928 641 984 00	clip	85-	4	
24	928 641 986 00	gasket	85-	2	
25	944 612 553 00	connector housing	85-	1	M 249
26	928 641 987 00	housing		1	
27	928 618 153 00	relay buzzer	84-	1	(J)
(27)	928 618 153 00	relay buzzer	84-	1	M 215
		mounting parts pulse sender transmission			
-	915 660 509 00	tensioning spring		1	
-	N 011 524 7	washer 6,4		1	
-	999 072 005 09	hexagon-head bolt M 6 X 12		1	
-	E 999 651 158 02	cable holder		1	
-	928 606 305 00	retaining bracket		1	
-	113 142 261 A	clip		1	
		- -- E N D -- -			

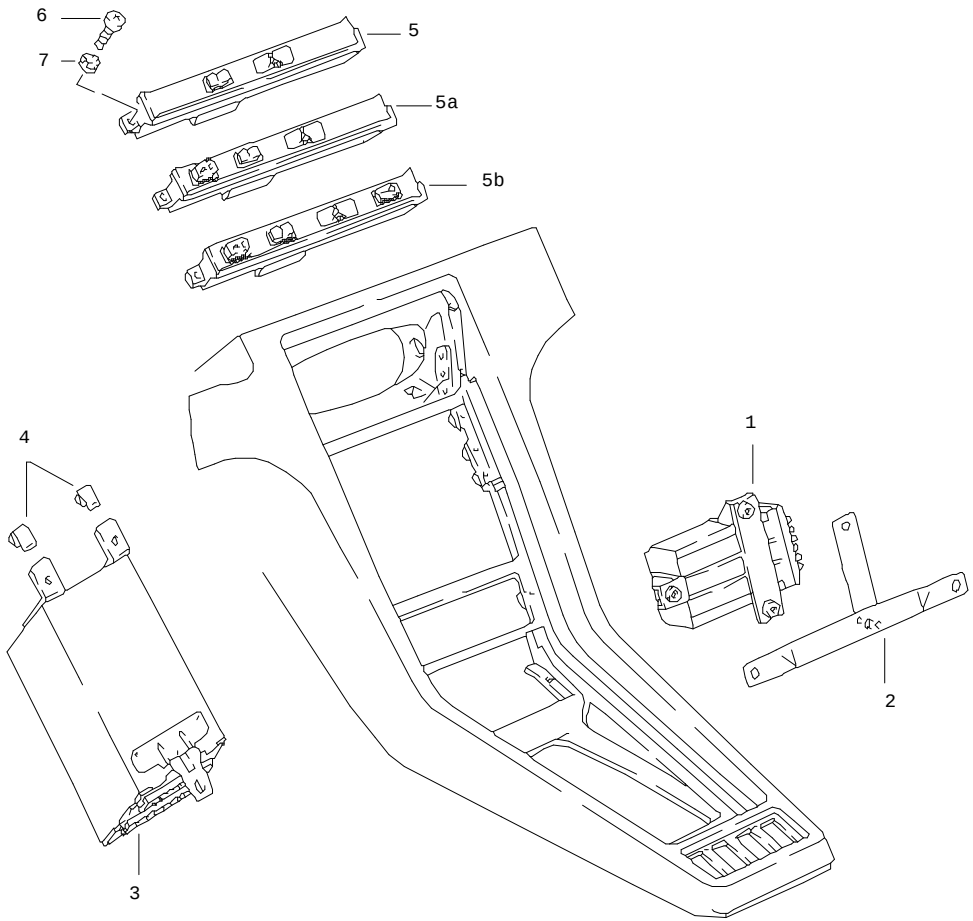

Pos	Part Number	Name	Remarks	Qty	Model
		central indicator			
1	928 641 603 02	bulb controlling device	83	1	
1	928 641 603 04	bulb controlling device	84-	1	
-	928 612 423 00	connector housing bulb controlling device		1	
2	928 641 607 01	support	/LL 83	1	
(2)	927 641 607 00	support	/RL 83	1	
3	E 928 641 602 01	central indicator	83	1	
(3)	928 641 602 05	central indicator	84-	1	
(3)	928 641 602 05	central indicator	84-	1	(J)
4	999 591 470 02	cable clamp	/RL	2	
5	928 641 609 10	acknowledgement buttons		1	
5A	928 641 609 13	acknowledgement buttons		1	
5B	928 641 609 15	acknowledgement buttons		1	
6	999 919 008 07	oval-head screw - 3,9 X 13		2	
7	N 011 522 14	washer - 4,3 -		2	
		mounting parts support bulb controlling device			
-	N 013 968 7	tapping screw 4,8 X 13	/LL	3	
-	900 143 039 02	tapping screw 4,8 X 19	/RL -83	3	
-	N 012 222 4	spring washer B 5	/RL -83	3	
-	999 507 025 02	speed nut B 4,8 mounting parts support clip	/RL -83	3	
-	N 012 226 5	spring washer B 6	/LL -83	2	

Pos	Part Number	Name	Remarks	Qty	Model
-	900 075 057 02	hexagon-head bolt M 6 X 16	/LL -83	2	
-	999 591 348 02	speed nut B 4,8	/RL -83	1	
-	900 143 046 02	tapping screw B 4,8 X 16	/RL -83	1	
-	900 028 007 02	spring washer B 5	/RL -83	1	
		mounting parts bulb controlling device support shelf			
-	N 011 665 3	washer B 5,3		2	
-	N 011 005 14	hexagon nut M 5	84-	2	
		- -- E N D -- -			

Pos	Part Number	Name	Remarks	Qty	Model

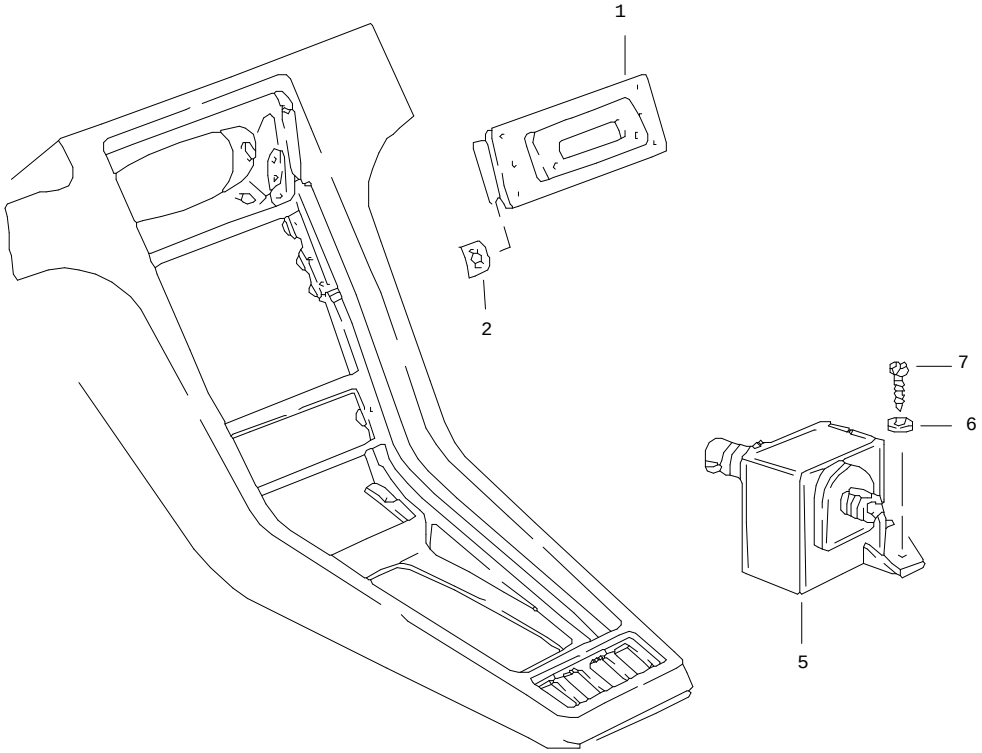

Pos	Part Number	Name	Remarks	Qty	Model
		clock			
1	E 928 641 701 03	clock		1	
2	999 507 209 01	speed nut	-84	2	
		temperature sensor emission control see group 2/02/05		1	(J)
		- -- E N D -- -			

Model	Year	MG	SG	Illustration	Restrictions	Update				
928	86	9	07	907-00		179	15:11	01.09.2004	PORSCHE	PET	PORSCHE

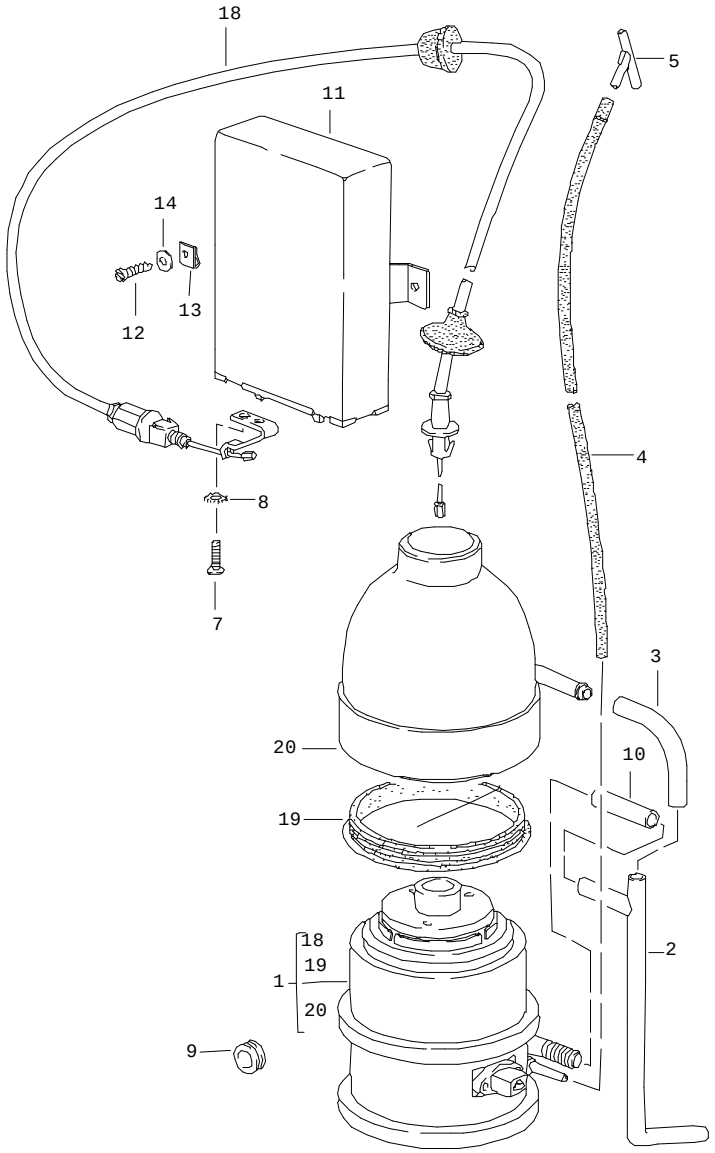

Pos	Part Number	Name	Remarks	Qty	Model
		cruise control			
1	928 617 121 01	drive link		1	M28.21/22
(1)	928 617 121 03	drive link		1	M28.43/44
2	928 617 124 00	breather pipe		1	
3	928 617 123 00	connecting piece		1	
		vacuum line see group 8/13/05 POS.5		1	
5	928 574 678 02	y-piece		1	
7	900 146 005 02	oval-head screw M 5 X 8		2	M28.21/22
9	021 119 569 A	rubber sleeve		1	
-	N 020 359 1	hose 9 X 14		*	
10	-	48 MM		1	
11	928 617 127 00	cruise control regulator		1	
12	900 187 013 02	tapping screw 4,2 X 13		2	
13	N 015 429 2	speed nut		2	
14	900 151 001 02	washer 4,3		2	
18	E 928 617 901 00	bowden cable		1	M28.21/22
(18)	928 617 125 02	bowden cable		1	M28.43/44
19	928 617 902 00	gasket		1	
20	928 617 903 00	protection cap		1	
		- -- E N D -- -			

Model	Year	MG	SG	Illustration	Restrictions	Update		
928	86	9	98	REP		179	15:31	01.09.2004

Pos	Part Number	Name	Remarks	Qty	Model
		repair kits			
>>	> 928 603 904 00	set of fastening parts		X	
		pulley			
		generator			
		comprising:			
		hexagon nut		1	
		SW 24			
		washer		1	
		thrust washer		1	
		woodruff key		1	
		- -- E N D -- -			

M000	! SUMMARY OF OPTIONAL EXTRAS "M"!
M018	SPORTS STEERING WHEEL
M018	WITH ELEVATED HUB 30MM
M020	SPEEDOMETER WITH TWO SCALES MPH-KM/H
M026	WITH ACTIVATED CHARCOAL CANISTER
M027	VERSION FOR CALIFORNIA
M034	VERSION FOR ITALY
M058	IMPACT ABSORBERS FRONT AND REAR
M061	VERSION FOR GREAT BRITAIN
M062	VERSION FOR SWEDEN
M113	VERSION FOR CANADA
M119	VERSION FOR SPAIN
M124	VERSION FOR FRANCE
M139	SEAT HEATING SYSTEM, LEFT SEAT
M151	ENGINE WITH DEFERRING PARTS
M157	*
M157	
M185	SAFETY BELTS 2-POINT,
M185	REAR AUTOMATIC
M187	HEADLAMPS WITH SEALED-BEAM
M187	INSERT "ASYMMETRIC"
M190	INCREASED SIDE DOOR STRENGTH
M193	VERSION FOR JAPAN
M208	TRAILER COUPLING
M215	VERSION FOR SAUDI ARABIA
M220	LOCKING DIFFERENTIAL 40 %
M240	VERSION FOR COUNTRIES HAVING
M240	INFERIOR FUEL QUALITIES
M249	AUTOMATIC TRANSMISSION
M251	AUTOMATIC TRANSMISSION
M251	SHORTER GEAR RATIO 33/13
M261	OUTSIDE MIRROR - PLAIN - PASSENGER'S SIDE,
M261	ELECTRICALLY ADJUSTABLE AND HEATABLE
M277	VERSION FOR SWITZERLAND
M298	PREPARED FOR UNLEADED
M298	FUEL
M298	MANUAL TRANSMISSION
M299	PREPARED FOR UNLEADED
M299	FUEL
M299	AUTOMATIC TRANSMISSION
M317	EQUIPMENT FOR COUNTRIES
M317	WITH DUST-LADEN AIR
M319	CHANGED STEP-UP OF FAN
M335	AUTOMATICAL SAFETY BELT, 3-POINT,
M335	REAR
M340	SEAT HEATING SYSTEM, RIGHT SEAT
M347	FORGED WHEELS PLATINUM-ANODIZED
M347	RIM 7 X 16
M347	TIRE 225/50 VR 16
M383	SPORT SEAT LEFT, ELECTRICAL
M383	VERTICALLY ADJUSTABLE

M387	SPORT SEAT RIGHT, ELECTRICAL
M387	VERTICALLY ADJUSTABLE
M395	FORGED WHEELS, SILVER COLORED ANODIZED,
M395	RIM 7 J X 16
M395	TIRES 225/50 VR 16
M401	WHEEL - CAST ALLUMINIUM ALLOY
M401	TELEPHONE DESIGN, RIM 7 X 16
M401	TIRE 225/50 VR16
M406	WHEEL HOUSING PROTECTION
M406	FRONT LEFT AND RIGHT
M409	SPORT SEATS
M415	WIDENING OF THE GAUGE
M415	ON THE TRACK ON REAR AXLE
M417	REAR PACKAGE BOX
M418	SIDE PROTECTION MOLDINGS
M430	FOG HEAD-LAMP YELLOW
M437	COMFORT SEAT LEFT,
M437	ELECTRICALLY ADJUSTABLE
M438	COMFORT SEAT RIGHT,
M438	ELECTRICALLY ADJUSTABLE
M454	AUTOMATIC SPEED CONTROL
M460	ADDITIONAL INTANK PUMP
M462	WINDSHIELD "SEKURIFLEX"
M463	WINDSHIELD CLEAR
M466	2ND REAR FOG LAMP
M467	OUTSIDE MIRROR FOR DRIVER'S SIDE, CONVEX,
M467	ELECTRICALLY HEATABLE AND ADJUSTABLE
M468	SIDE GLASSES GREEN AND WINDSHIELD GREEN -
M468	UPPER PART DARKER COLORED
M470	WITHOUT FRONT-SPOILER
M470	AND REAR-SPOILER
M474	SHOCK ABSORBER (SPORTING) FRONT AND REAR
M479	VERSION FOR AUSTRALIA
M481	MANUAL TRANSMISSION
M484	SYMBOLS AND INSIGNIAS
M484	FOR SWITCHES AND INSTRUMENTS
M489	SWITCHES AND INSIGNIAS IN GERMAN LANGUAGE
M490	SOUND SYSTEM
M492	FOR LEFT-HAND TRAFFIC
M494	ADDITIONAL AMPLIFIER
M499	SEKURIFLEX-
M499	WINDSHIELD
M525	ANTI-THEFT DEVICE WITH CONTINUOUS SOUND
M528	OUTER REAR VIEW MIRROR FOR PASSENGER'S SIDE
M528	- CONVEX - ELECTRICALLY HEATABLE AND ADJUSTABLE
M533	ANTI-THEFT DEVICE
M553	VERSION FOR USA, CANADA
M567	WINDSHIELD TINTED, UPPER PART
M567	DARKER COLOURED
M570	AIR CONDITIONER WITH IMPROVED EFFICIENCY
M576	WITHOUT REAR FOG LAMP

M593	ANTIBLOCK SYSTEM (BOSCH)
M650	ELECTRICAL SLIDING ROOF
M900	TOURIST'S
M900	CARS
M981	LEATHER EQUIPMENT
M985	PARTS HAVING A LUSTER OF SILVER
M986	PARTIAL LEATHER EQUIPMENT

TR203

THIS PARTS CATALOGUE CONTAINS ALL ORDER INFORMATION OF
TYPE 928S FROM MODEL YEAR 1983 TO MODEL YEAR 1986

IT IS AVAILABLE IN TWO EDITIONS IN THE FOLLOWING LANGUAGES:

EDITION
USA, CANADA - *

EDITION
ALL OTHER COUNTRIES - GERMAN

* - ENGLISH

- FRENCH

- ITALIAN

- SPANISH

UPDATING IS BEING PERFORMED BY CHANGING OF UPDATE.

THE EDITION CAN BE RECOGNIZED BY THE CURRENT NO.
YEAR IN THE BOTTOM LINE OF SUBJECT UPDATE.

THE PREVIOUS UPDATE SHOULD NO LONGER BE USED.

ALL ILLUSTRATIONS ARE SUBJECT TO CHANGE WITHOUT OBLIGATION.

Model	Year	MG	SG	Illustration	VIN No.	Update		
928	86	1	01	101		179	15:20	01.09.2004

TR006

EXPLANATION OF THE ABRIDGED VERSION OF THE VEHICLE IDENT. NUMBERS (VIN)
USED IN THE CATALOGUE

```
 DIGIT:                1 2 3  4 5 6  7 8  9  10  11  12  13 14 15 16 17

 EXAMPLE:              W P O  Z Z Z  9 2  Z   G   S   8   4  0  1  2  5
                                     ===      =   =   =   =============
                                      !       !   !   !         !
VEHICLE TYPE 1ST+2ND DIGIT----------------+   !   !   !         !
                                              !   !   !         !
MODEL YEAR----------------------------------------+   !         !
                                                  !   !         !
MANUFACTURING LOCATION--------------------------------+   !         !
                                                          !         !
VEHICLE TYPE 3RD DIGIT------------------------------------+         !
                                                                    !
SERIAL NUMBER-------------------------------------------------------+
```

Model	Year	MG	SG	Illustration	VIN No.	Update		
928	86	1	01	101		179	15:20	01.09.2004

FR203

VEHICLE TYPE	MY	VIN	ENGINE TYPE	
928 S	83 D	92DS8 40001>45000	M28.11/12	221KW
928 S (USA)(CDN)	83 D	92DS8 60001>65000	M28.19/20	178KW
928 S (J)	83 D	92DS8 49501>49999	M28.20	178KW
928 S	84 E	92ES8 40001>45000	M28.21/22	228KW
928 S (USA)(CDN)	84 E	92ES8 60001>65000	M28.19/20	178KW
928 S (J)	84 E	92ES8 49501>49999	M28.20	178KW
928 S	85 F	92FS8 40001>45000	M28.21/22	228KW
928 S M298/299	85 F	92FS8 40001>45000	M28.43/44	200KW
928 S (USA)(CDN)	85 F	92FS8 60001>65000	M28.43/44	200KW
928 S (J)	85 F	92FS8 49501>49999	M28.44	200KW
928 S	86 G	92GS8 40001>45000	M28.21/22	228KW
928 S M298/299	86 G	92GS8 40001>45000	M28.45/46	212KW
928 S (USA)(CDN)	86 G	92GS8 60001>65000	M28.43/44	215KW
928 S (J)	86 G	92GS8 49501>49999	M28.44	215KW

Model	Year	MG	SG	Illustration	VIN No.	Update		
928	86	1	01	101		179	15:20	01.09.2004

FR203

VEHICLE TYPE	MY	VIN	ENGINE TYPE	
928 S	83 D	92DS8 40001>45000	M28.11/12	221KW
928 S (USA)(CDN)	83 D	92DS8 60001>65000	M28.19/20	178KW
928 S (J)	83 D	92DS8 49501>49999	M28.20	178KW
928 S	84 E	92ES8 40001>45000	M28.21/22	228KW
928 S (USA)(CDN)	84 E	92ES8 60001>65000	M28.19/20	178KW
928 S (J)	84 E	92ES8 49501>49999	M28.20	178KW
928 S	85 F	92FS8 40001>45000	M28.21/22	228KW
928 S M298/299	85 F	92FS8 40001>45000	M28.43/44	200KW
928 S (USA)(CDN)	85 F	92FS8 60001>65000	M28.43/44	200KW
928 S (J)	85 F	92FS8 49501>49999	M28.44	200KW
928 S	86 G	92GS8 40001>45000	M28.21/22	228KW
928 S M298/299	86 G	92GS8 40001>45000	M28.45/46	212KW
928 S (USA)(CDN)	86 G	92GS8 60001>65000	M28.43/44	215KW
928 S (J)	86 G	92GS8 49501>49999	M28.44	215KW

T

```
EXPLANATION OF THE MOTOR-NUMBERS USED IN THE CATALOGUE
======================================================

DIGIT:                                          1 2 3   4 5 6 7 8

EXAMPLE:                                        8 2 G   0 0 1 3 6
                                                = = =   =========
                                                ! ! !       !
ENGINE TYPE (8 = 8-CYL.-ENGINE)-----------------+ ! !       !
                                                  ! !       !
ENGINE VERSION-------------------------------------+ !       !
                                                     !       !
MODEL YEAR-----------------------------------------+       !
                                                           !
SERIAL NUMBER-------------------------------------------------+
```

Model	Year	MG	SG	Illustration	VIN No.	Update		
928	86	1	01	101		179	15:20	01.09.2004

MR203

VEHICLE TYPE	ENGINE TYPE	MY	ENGINE NO.	TECHNICAL DATA
928 S	M28.11	83 D	82D 0001>5000	8ZYL/4,7L/221KW
928 S M249	M28.12	83 D	82D 5001>8000	8ZYL/4,7L/221KW
928 S (USA)(CDN)	M28.19	83 D	81D 0001>5000	8ZYL/4,7L/178KW
928 S M249 (USA)(CDN)	M28.20	83 D	81D 5001>8000	8ZYL/4,7L/178KW
928 S (J)	M28.20	83 D	81D 9001>9999	8ZYL/4,7L/178KW
928 S	M28.21	84 E	82E 00001>05000	8ZYL/4,7L/228KW
928 S M249	M28.22	84 E	82E 05001>10000	8ZYL/4,7L/228KW
928 S (USA)(CDN)	M28.19	84 E	81E 00001>05000	8ZYL/4,7L/178KW
928 S M249 (USA)(CDN)	M28.20	84 E	81E 05001>10000	8ZYL/4,7L/178KW
928 S (J)	M28.20	84 E	81E 05001>10000	8ZYL/4,7L/178KW
928 S	M28.21	85 F	82F 00001>05000	8ZYL/4,7L/228KW
928 S M249	M28.22	85 F	82F 05001>10000	8ZYL/4,7L/228KW
928 S M298	M28.43	85 F	81F 00001>05000	8ZYL/4,7L/200KW
928 S M299	M28.44	85 F	81F 05001>10000	8ZYL/4,7L/200KW
928 S (USA)(CDN)	M28.43	85 F	81F 00001>05000	8ZYL/4,7L/200KW
928 S M249 (USA)(CDN)	M28.44	85 F	81F 05001>10000	8ZYL/4,7L/200KW
928 S (J)	M28.44	85 F	81F 05001>10000	8ZYL/4,7L/200KW
928 S	M28.21	86 G	82G 00001>05000	8ZYL/4,7L/228KW
928 S M249	M28.22	86 G	82G 05001>10000	8ZYL/4,7L/228KW
928 S M298	M28.45	86 G	89G 00001>05000	8ZYL/4,7L/212KW
928 S M299	M28.46	86 G	89G 05001>10000	8ZYL/4,7L/212KW
928 S M251 (CH)(S)	M28.22	86 G	82G 05001>10000	8ZYL/4,7L/228KW
928 S (AUS)	M28.46	86 G	89G 05001>10000	8ZYL/4,7L/212KW
928 S (USA)(CDN)	M28.43	86 G	81G 00001>05000	8ZYL/4,7L/215KW
928 S M249 (USA)(CDN)	M28.44	86 G	81G 05001>10000	8ZYL/4,7L/215KW
928 S (J)	M28.44	86 G	81G 05001>10000	8ZYL/4,7L/215KW

```
TR201
    EXPLANATION OF THE TRANSMISSION-NUMBERS USED IN THE CATALOGUE
    =============================================================

    DIGIT:                                          1 2 3   4 5 6 7 8

    EXAMPLE:                                        1 1 G   0 0 1 4 3
                                                    = = =   =========
                                                    ! ! !       !
    TRANSMISION TYPE-----------------------------------+ ! !       !
                                                      ! !       !
    TRANSMISSION VERSION-------------------------------+ !       !
                                                        !       !
    MODEL YEAR-----------------------------------------------+       !
                                                                    !
    SERIAL NUMBER-------------------------------------------------------+



    SHORT TRANSMISSION NO.===============> PORSCHE-TRANSMISSION-TYPE (3-SPEED)
    ==========================================================================
    722 270 06 01 722 007 02  . . .   . . .  =A22.04
                            I_____________I
                                   V
    SHORT TRANSMISSION NO.         V
    ======================         V
                             ______V______
    DIGIT:                1   2 3 4 V 5 6 7

    EXAMPLE:              A   0 2 3   2 1 9
                          =   =============
                          !         !
    TRANSMISSION TYPE----+          !
                                    !
    SERIAL NUMBER------------------+



    SHORT TRANSMISSION NO.===============> PORSCHE-TRANSMISSION-TYPE (4-SPEED)
    ==========================================================================
    722 270 12 01 722 316 02  . . .  . . .  =A28.01
                            I_____________I
                                   V
    SHORT TRANSMISSION NO.         V
    ======================         V
                             ______V______
    DIGIT:                1   2 3 4   5 6 7

    EXAMPLE:              A   5 4 7   6 2 8
                          =   =============
                          !         !
    TRANSMISSION TYPE----+          !
                                    !
    SERIAL NUMBER------------------+
```

Model	Year	MG	SG	Illustration	VIN No.	Update		
928	86	1	01	101		179	15:21	01.09.2004

GR203

VEHICLE TYPE	TRANSM. TYPE	MY	TRANSMISSION NO.	TECHNICAL DATA
928 S	G28.07	83	11D 0001>5000	5-SPEED
928 S M249	A22.04	83	16D 0001>5000	3-SPEED
928 S (USA)(CDN)	G28.08	83	11D 5001>9999	5-SPEED
928 S M249 (USA)(CDN)	A28.01	83	16D 5001>9999	4-SPEED
928 S (J)	A28.01	83	16D 5001>9999	4-SPEED
928 S	G28.07	84	11E 00001>05000	5-SPEED
928 S M249	A28.02	84	16E 05001>10000	4-SPEED
928 S M249	A28.03	84	16E 10001>11000	4-SPEED
928 S (USA)(CDN)	G28.08	84	11E 05001>10000	5-SPEED
928 S M249 (USA)(CDN)	A28.01	84	16E 00001>05000	4-SPEED
928 S (J)	A28.01	84	16E 00001>05000	4-SPEED
928 S	G28.10	85	11F 00001>05000	5-SPEED
928 S M249	A28.05	85	16F 05001>10000	4-SPEED
928 S M249	A28.06	85	16F 10001>11000	4-SPEED
928 S M298	G28.11	85	11F 05001>10000	5-SPEED
928 S M299	A28.04	85	16F 00001>05000	4-SPEED
928 S (USA)(CDN)	G28.11	85 F	11F 05001>10000	5-SPEED
928 S (USA)(CDN)	A28.04	85 F	16F 00001>05000	4-SPEED
928 S (J)	A28.04	85 F	16F 00001>05000	4-SPEED
928 S	G28.10	86 G	11G 00001>05000	5-SPEED
928 S M249	A28.08	86 G	16G 05001>10000	4-SPEED
928 S M298	G28.10	86 G	11G 00001>05000	5-SPEED
928 S M299	A28.11	86 G	16G 15001>20000	4-SPEED
928 S M251 (CH)(S)(AUS)	A28.09	86 G	16G 10001>11000	4-SPEED
928 S (USA)(CDN)	G28.11	86 G	11G 05001>10000	5-SPEED
928 S M249 (USA)(CDN)	A28.07	86 G	16G 00001>05000	4-SPEED
928 S (J)	A28.07	86 G	16G 00001>05000	4-SPEED
928 S (AUS)	A28.11	86 G	16G 15001>20000	4-SPEED

TR201

LEGENDS AND NOTICES

IN COLUMN -S- STATUS

N	NEW ADDITION
P	PART ALREADY IN PROGRAMME, BUT NEW AT THIS APPLICATION
W	DELETED AT THIS APPLICATION, BUT CONTINUED TO BE CARRIED
A	STOCK TO BE USED UP
U	DELETED WITHOUT REPLACEMENT
*	PART ALSO OR ONLY AVAILABLE IN REPAIR KIT
>	ALSO AVAILABLE IN EXCHANGE

IN COLUMN - ILL. -

1	IDENTIFICATION NO. IN ILLUSTRATION
(1)	PART ONLY SIMILAR AS ILLUSTRATED
-	PART IS NOT ILLUSTRATED

FIG.-NUMBERS FOR WHICH THERE IS SHOWN NO TEXT ARE NOT VALID FOR THIS EDITION OF CATALOGUE

IN COLUMN -PART NUMBER/CODE-

000 000 000 00	PART NUMBER EQUALS ORDERING NO., IF A CODE IS SHOWN, IT WILL HAVE TO BE PART OF ORDERING NUMBER
AC3	COLOUR CODE

IN COLUMN -TEXT

INSTALLATION WIRH ENGINE OR CHASSIS NUMBER-RANGE

		EXAMPLE:
M 82G 01291	>>	FROM ENGINE NO.
F	>> 92 GS84 01291	UP TO VIN

TR201

```
                    IN COLUMN  - A -
                    ----------------

                    IDENTIFICATION LETTER FOR PERIOD OF INSTALLATION
                    THAT IS REPEATED SEVERAL TIMES IN THE CATALOG GROUP.

                    EXPLANATION PLEASE FIND IN TEXT COLUMN OF THE CATALOG GROUP


                    IN COLUMN   - QU -   = NO. OF PIECES
                    ------------------------------------

          1         NUMBER PER APPLICATION

          X         NUMBER AS NEEDED

          *         AVAILABLE ONLY IN RUNNING LENGTHS   1 = 1 METRE


                    IN COLUMN   - MODEL/SYMBOL -
                    ----------------------------

        M650        OPTIONAL EQUIPMENT  -  SEE M-NO. LIST

         -86        LIMITATION OF MODEL YEAR FOR INSTANCE: VALID UP TO
                    END OF MODEL YEAR 1986

        /LL         LHD

        /RL         RHD
                    ---------+
        /V          FRONT    I
                             I
        /H          REAR     I
                             I---> APPLIES TO
        /L          LEFT     I     DIRECTION OF TRAVEL
                             I
        /R          RIGHT    I
                    ---------+

       AUT.         AUTOMATIC

        WW          THE PART CAN BE USED INSTEAD OF THE
                    PRECEDING ONE
```

TR206

EQUIPMENT BY COUNTRY REGULATIONS

(A)	AUSTRIA
(AUS)	AUSTRALIA
(B)	BELGIUM
(CDN)	CANADA
(CH)	SWITZERLAND
(D)	FEDERAL REPUBLIC OF GERMANY
(DK)	DENMARK
(E)	SPAIN
(F)	FRANCE
(GB)	GREAT BRITAIN
(GR)	GREECE
(HK)	HONGKONG
(I)	ITALY
(J)	JAPAN
(L)	LUXEMBURG
(N)	NORWAY
(NL)	NETHERLANDS
(NS)	NEW ZEALAND
(P)	PORTUGAL
(RC)	TAIWAN
(S)	SWEDEN
(SA)	SAUDI ARABIA
(SF)	FINLAND
(USA)	UNITED STATES OF AMERICA