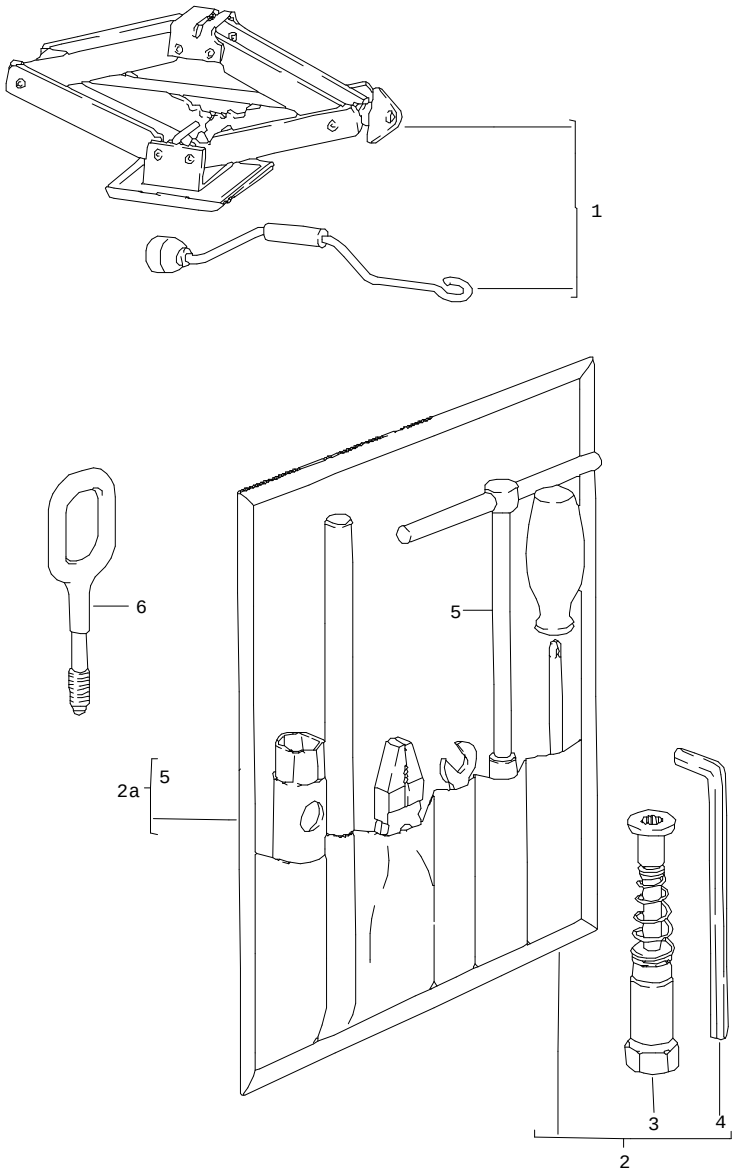


| Pos | Part Number | Name | Remarks | Qty | Model |
|---|---|---|---|---|---|
| | | accessories | | | |
| 1 | 477 011 033 | scissors type jack | | 1 | |
| (2A) | 944 721 027 05 | tool bag<br>with contents<br>comprising: | | 1 | |
| | | tool bag<br>angular screw driver | | 1 | |
| 3 | 477 012 233 | spark plug wrench | | 1 | |
| | | rim wrench | | 1 | |
| | | operating rod<br>for<br>rim wrench | | 1 | |
| | | double-end spanner<br>10 X 13 | | 1 | |
| | | handle | | 1 | |
| | | insert<br>for<br>cross-recess screw<br>and<br>slotted screw | | 1 | |
| | | universal pliers | | 1 | |
| - | 928 361 311 00 | hook<br>for<br>cover<br>wheel nut | | 1 | |
| | | use also: | | | |
| 6 | 996 721 151 00 | towing lug | 82- | 1 | |
| 6 | 928 722 101 05 | towing lug | 82- | 1 | M 058 |
| | | - -- E N D -- - | | | |

| Model | Year | MG | SG | Illustration | Restrictions | Update | | |
|---|---|---|---|---|---|---|---|---|
| 924 | 85 | 0 | 01 | 1-05 | | 179 | 9:48 | 16.08.2004 |

| Pos | Part Number | Name | Remarks | Qty | Model |
|---|---|---|---|---|---|
| | | sticker | | | |
| - | 477 000 257 G | sticker<br>tyre pressure<br>185/70 - HR 14 | | 1 | 924 |
| - | 477 000 179 A | sticker | | 1 | 924(AUS) |
| - | 477 000 257 E | sticker<br>tyre pressure<br>205/60 - HR 15 | | 1 | 924 |
| - | 477 000 203 | sticker | | 1 | 924(AUS) |
| - | 937 701 127 00 | sticker<br>tyre pressure<br>185/70 - VR 15 | -81 | 1 | TURBO |
| - | 477 000 205 | sticker | | 1 | TURBO (AUS) |
| - | 937 701 127 00 | sticker<br>tyre pressure<br>205/55 - VR 16 | -81 | 1 | TURBO |
| - | E 477 000 215 | sticker | | 1 | TURBO(AUS) |
| - | 937 701 127 00 | sticker | 82 | 1 | TURBO |
| - | 937 701 127 00 | sticker | | 1 | GT |
| - | 911 701 137 01 | sticker<br>emergency wheel | | 1 | |
| - | 477 000 285 | sticker<br>high voltage | | 1 | |
| - | 477 000 255 A | sticker<br>adjustment<br>ignition point | -80 | 1 | TURBO |
| - | E 477 000 255 D | sticker<br>adjustment<br>ignition point | 81- | 1 | TURBO |
| - | E 477 000 255 C | indication sticker<br>adjustment<br>ignition point | | 1 | GT |
| - | 477 000 275 F | sticker<br>engine specifications | -83 | 1 | 924(S) |
| - | 477 000 275 H | sticker<br>engine specifications | 84- | 1 | 924(S) |
| - | 477 000 275 D | sticker | -80 | 1 | TURBO(S) |
| - | 477 000 275 G | sticker | 81- | 1 | TURBO(S) |
| - | 477 000 279 C | sticker | -80 | 1 | 924(AUS) |
| - | 477 000 279 E | sticker | 81 | 1 | 924(AUS) |

| Model | Year | MG | SG | Illustration | Restrictions | Update | | |
|---|---|---|---|---|---|---|---|---|
| 924 | 85 | 0 | 01 | 1-05 | | 179 | 9:48 | 16.08.2004 |

| Pos | Part Number | Name | Remarks | Qty | Model |
|---|---|---|---|---|---|
| - | 477 000 279 G | sticker | 82- | 1 | 924(AUS) |
| - | E 477 000 279 D | sticker | -80 | 1 | TURBO(AUS) |
| - | E 477 000 279 F | sticker | 81 | 1 | TURBO(AUS) |
| - | E 477 000 279 H | sticker | 82- | 1 | TURBO(AUS) |
| - | 477 000 269 | indication sticker<br>bleeding | | 1 | 924 |
| - | 477 000 269 A | indication sticker<br>bleeding | | 1 | 924(F) |
| - | 477 000 269 C | indication sticker<br>bleeding | | 1 | TURBO |
| - | 477 000 269 B | indication sticker<br>bleeding | | 1 | TURBO(F) |
| - | 411 000 263 A | sticker<br>octane number | | 1 | |
| | | - -- E N D -- - | | | |

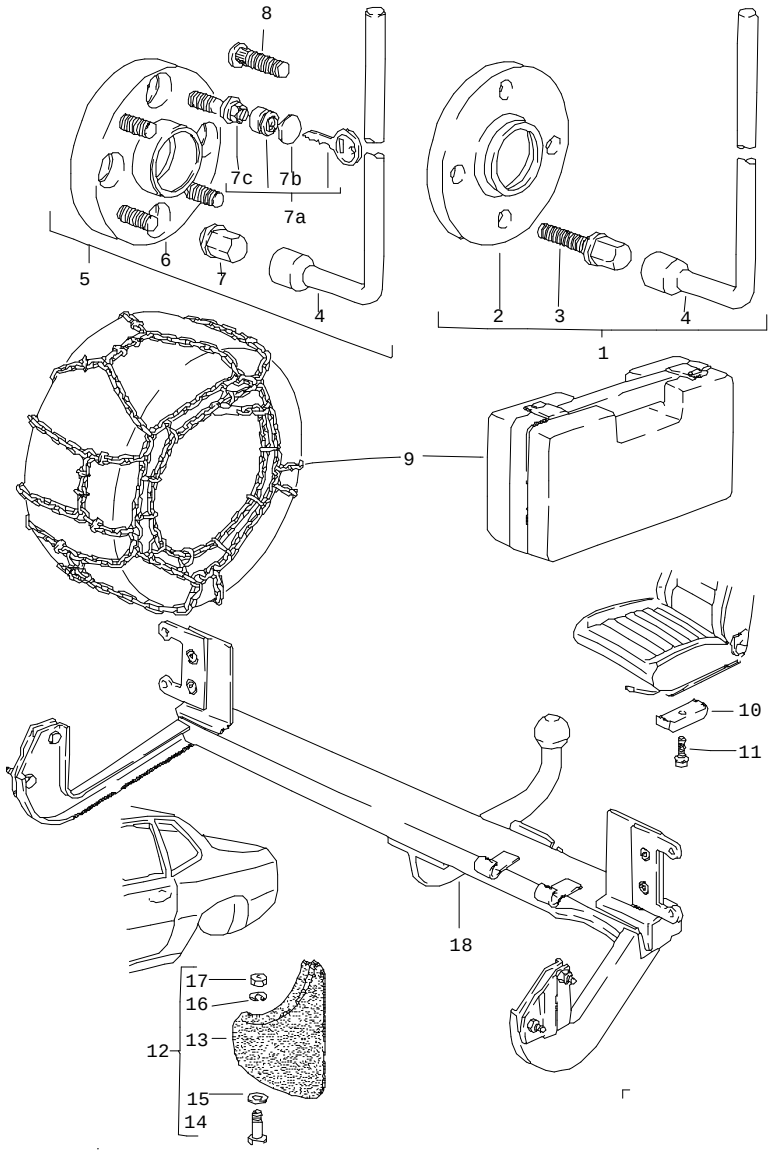


| Pos | Part Number | Name | Remarks | Qty | Model |
|---|---|---|---|---|---|
| | | accessories | | | |
| 1 | E 477 698 153 A | installation set<br>widening of track<br>15 MM<br>for rear axle only<br>together with<br>alloy wheel<br>6 J X 14<br>4-<br>hole | | 1 | 924 |
| 2 | 477 601 103 C | spacer ring<br>15 MM | | 2 | |
| 3 | 914 361 315 01 | wheel bolt | | 8 | |
| 4 | 999 571 045 02 | rim wrench | | 1 | |
| 5 | E 477 698 154 | installation set<br>widening of track<br>28 MM<br>for rear axle only<br>together with<br>alloy wheel<br>6 J X 14<br>4-<br>hole | | 1 | 924 |
| 6 | 477 601 093 | spacer ring<br>28 MM | | 2 | |
| 7 | 999 182 003 36 | wheel nut | | 8 | |
| 4 | 999 571 045 02 | rim wrench | | 1 | |
| 8 | 904 341 671 00 | wheel bolt | | 8 | 924 |
| 7A | 928 361 047 03 | wheel nut<br>lockable<br>1 set | | 1 | |
| 7B | 928 361 310 00 | cap<br>for<br>RADMUTTERSCHLOSS | | 1 | |
| 7C | 928 361 306 03 | wheel nut<br>lockable without lock | | 4 | |
| | | snow chains | | | |
| 9 | E 477 601 901 | edge chain<br>1 set<br>165 R 14 | | 1 | |

| Pos | Part Number | Name | Remarks | Qty | Model |
|---|---|---|---|---|---|
| (9) | 911 361 903 00 | cross chain<br>1 set<br>165 R 14 | | 1 | |
| (9) | E 477 601 905 | ring chain<br>1 set<br>165 R 14 | | 1 | |
| (9) | 477 601 903 | edge chain<br>1 set<br>185/70 R 14 | | 1 | |
| (9) | 911 361 909 00 | snow chains<br>1 set<br>185/70 R 14 | | 1 | |
| (9) | 911 361 903 00 | cross chain<br>1 set<br>185/70 R 14 | | 1 | |
| (9) | 477 601 907 | ring chain<br>1 set<br>185/70 R 14 | | 1 | |
| (9) | E 901 361 901 00 | edge chain<br>1 set<br>185/65 R 15<br>185/70 R 15 | | 1 | |
| (9) | 911 361 902 00 | cross chain<br>1 set<br>185/65 R 15<br>185/70 R 15 | | 1 | |
| (9) | 911 361 909 00 | snow chains<br>1 set<br>185/70 R 15 | | 1 | |
| (9) | 911 361 909 00 | snow chains<br>1 set<br>185/70 R 15<br>215/60 R 15<br>205/55 R 16 | | 1 | |
| | | vertical seat adjustment | | | |
| 10 | 911 521 493 00 | spacer<br>13 MM | | X | |
| 11 | 900 067 089 02 | pan-head screw<br>M 6 X 25<br>for<br>vertical seat adjustment<br>13 MM | | X | |
| (11) | N 014 749 2 | pan-head screw<br>M 6 X 40<br>for<br>vertical seat adjustment<br>26 MM | | X | |
| 12 | E 477 821 805 | mud flap<br>1 set | | 1 | |
| 13 | 477 821 161 A | mud flap | /L | 1 | |
| (13) | 477 821 162 A | mud flap | /R | 1 | |
| 14 | N 010 264 4 | hexagon-head bolt<br>M 5 X 20 | | 6 | |
| 15 | N 011 692 3 | washer | | 6 | |
| 16 | N 012 005 3 | lock ring<br>B 6 | | 6 | |
| 17 | N 011 005 14 | hexagon nut<br>M 5 | | 6 | |
| | | trailer coupling | | | |
| 18 | E 477 800 805 D | trailer coupling<br>installation set | | 1 | |
| - | 928 006 901 00 | sticker<br>drawbar load | | 1 | |
| - | 111 919 209 A | indicator light | | 1 | |
| - | 900 631 132 90 | bulb<br>12 V, 1,2 W | | 1 | |
| - | 431 953 231 | relay | | 1 | |
| | | - -- E N D -- - | | | |

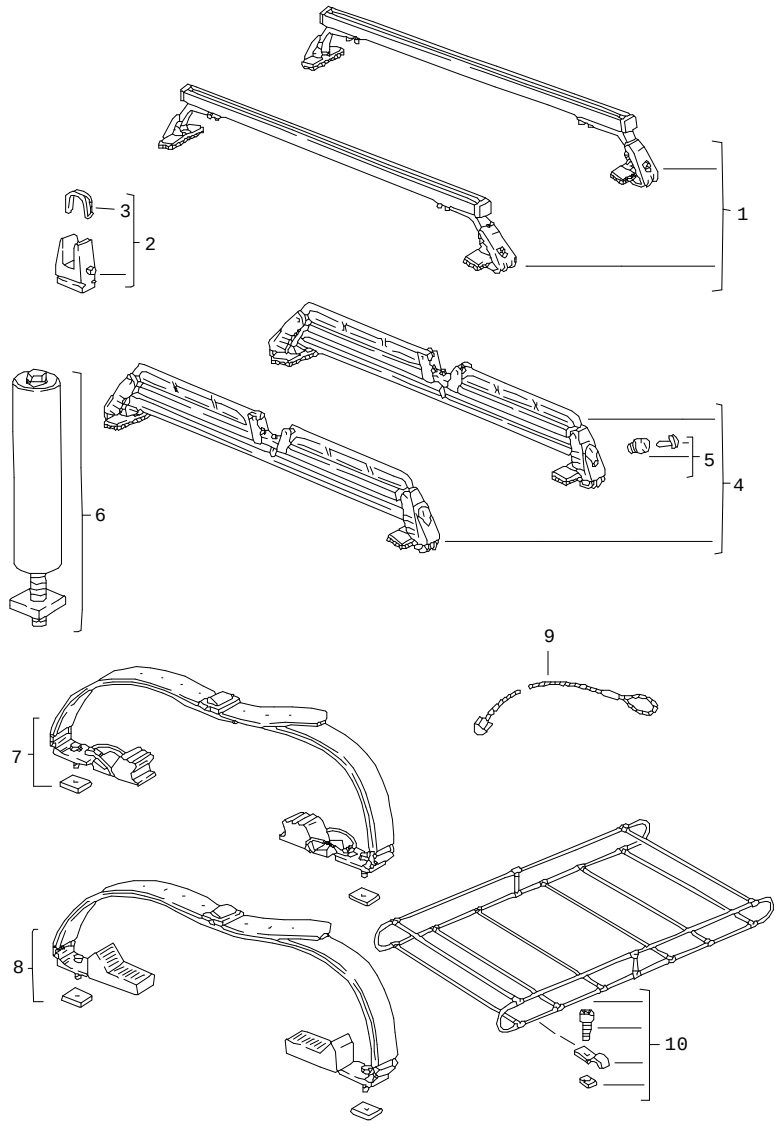


| Pos | Part Number | Name | Remarks | Qty | Model |
|---|---|---|---|---|---|
| | | roof transport system<br>until<br>35 KG | -81 | | |
| 1 | 477 091 033 | set of main supports | | 1 | |
| 2 | E 928 801 903 02 | rubber support for skis<br>1 set | | X | |
| 3 | E 928 801 193 02 | retaining strap<br>1 set | | X | |
| 4 | E 477 091 025 A | ski rack<br>lockable | | 1 | |
| 5 | 928 801 011 02 | cylinder lock<br>with stipulated lock-no. | | 1 | |
| 6 | E 928 801 085 02 | ladder support mandrel | | X | |
| 7 | E 928 801 019 02 | set of surf board supports | | 1 | |
| 8 | E 928 801 017 02 | set - canoe carrier | | 1 | |
| 9 | E 928 801 079 02 | safety rope | | 1 | |
| 10 | E 928 801 081 02 | roof luggage rack | | 1 | |
| | | - -- E N D -- - | | | |

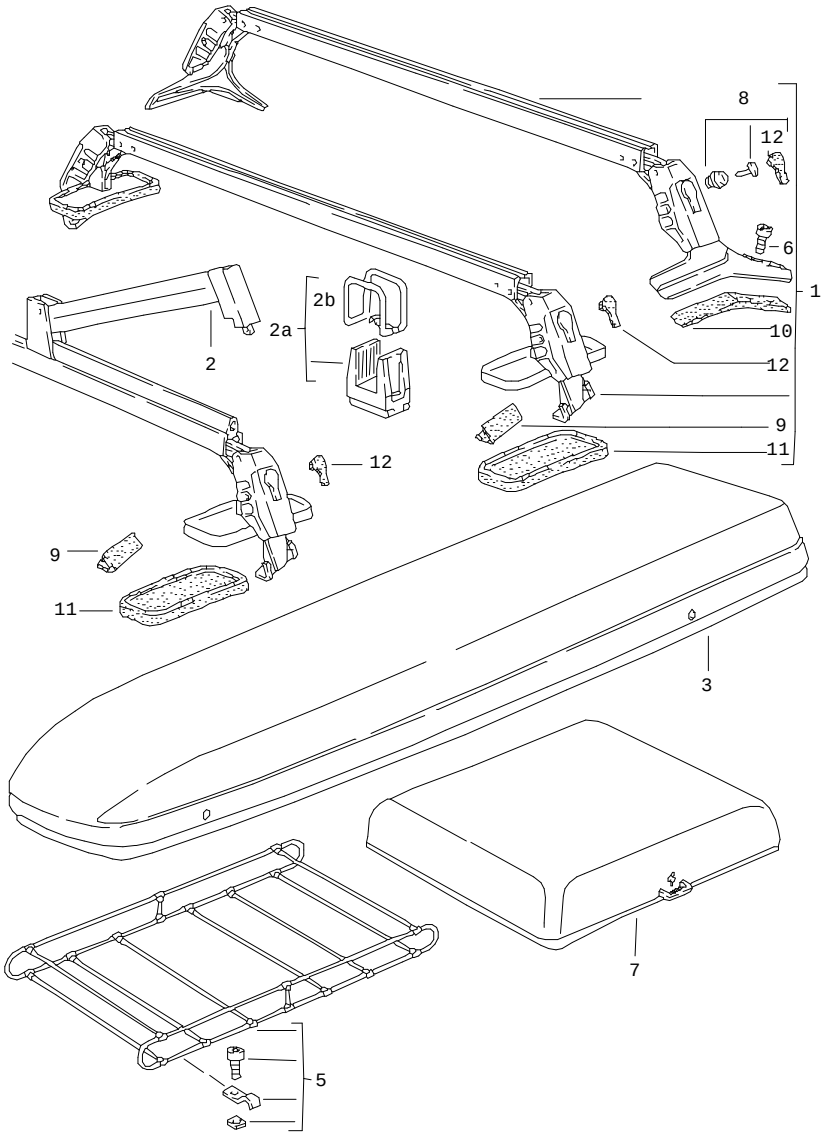


| Pos | Part Number | Name | Remarks | Qty | Model |
|---|---|---|---|---|---|
| | | roof transport system<br>- I -<br>until<br>75 KG | -81<br><br>82- | | |
| 1 | E 944 801 005 00 | set of main supports | | 1 | |
| 2 | E 928 801 061 02 | retaining strip<br>1 set | | 1 | |
| 2A | E 928 801 903 02 | rubber support for skis<br>1 set | | X | |
| 2B | E 928 801 193 02 | retaining strap<br>1 set | | X | |
| 3 | E 928 801 063 02 | ski box | /L | 1 | |
| (3) | E 928 801 064 02 | ski box | /R | 1 | |
| 5 | E 928 801 081 02 | roof luggage rack | | 1 | |
| 6 | 999 119 012 07 | pan-head screw | | 4 | |
| 7 | E 928 801 073 02 | box for suitcase | | 1 | |
| 8 | 928 801 011 02 | cylinder lock<br>with stipulated lock-no. | | 1 | |
| 9 | E 477 091 145 | protection cap | | 2 | |
| 10 | 477 091 151 | insert | /L | 1 | |
| (10) | 477 091 152 | insert | /R | 1 | |
| 10 | 477 091 151 A | protective rubber | /L | 1 | |
| (10) | 477 091 152 A | protective rubber | /R | 1 | |
| 11 | E 928 801 267 02 | rubber plate<br>front | | 2 | |
| 12 | 928 801 111 02 | protection cap<br>for<br>lock | | 4 | |
| 13 | 928 801 107 02 | cover | /V | 2 | |
| 14 | E 944 801 901 01 | parts kit | /V | X | |
| 15 | E 944 801 901 00 | parts kit | /V | X | |
| | | - -- E N D -- - | | | |

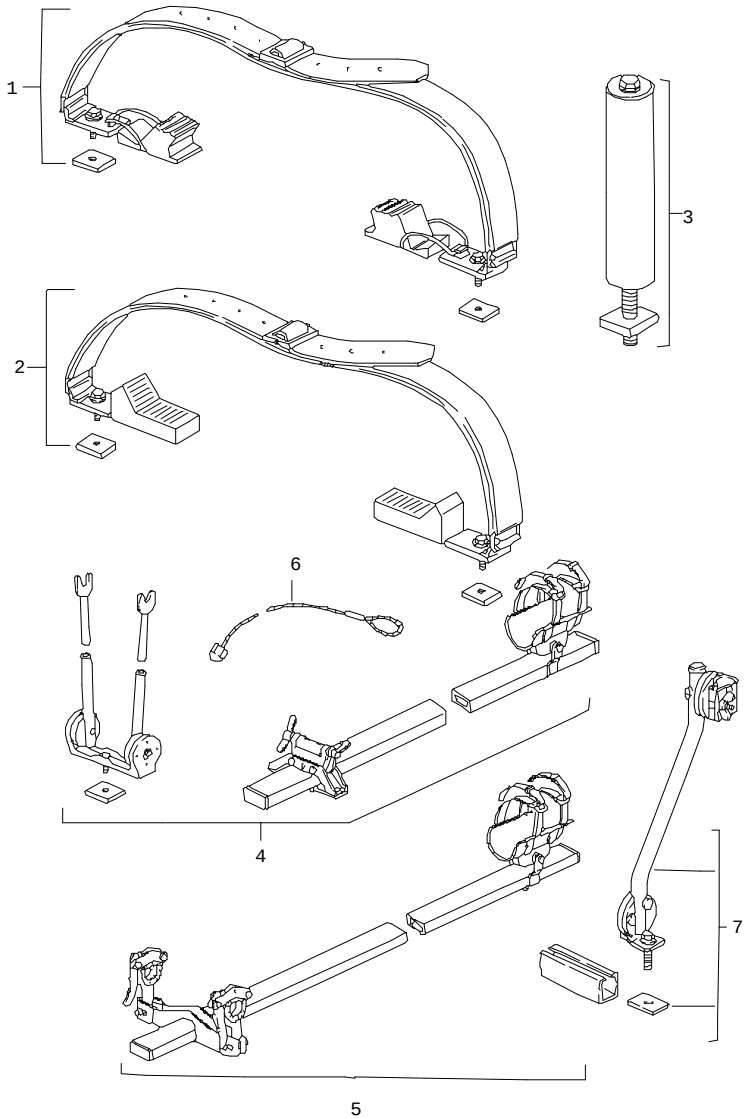


| Pos | Part Number | Name | Remarks | Qty | Model |
|---|---|---|---|---|---|
| | | roof transport system<br>- II -<br>until<br>75 KG | -81<br><br>82- | | M 388 |
| 1 | E 928 801 019 02 | set of surf board supports | | 1 | |
| 2 | E 928 801 017 02 | set - canoe carrier | | 1 | |
| 3 | E 928 801 085 02 | ladder support mandrel | | X | |
| 4 | E 928 801 093 02 | set - bike carrier<br>racing bike | | 1 | |
| 5 | E 928 801 095 02 | set - bike carrier<br>standard bike | | 1 | |
| 6 | E 928 801 079 02 | safety rope<br>for<br>anti-theft protection | | 1 | |
| 7 | E 928 801 097 02 | support for bicycle | | 1 | |
| | | - -- E N D -- - | | | |

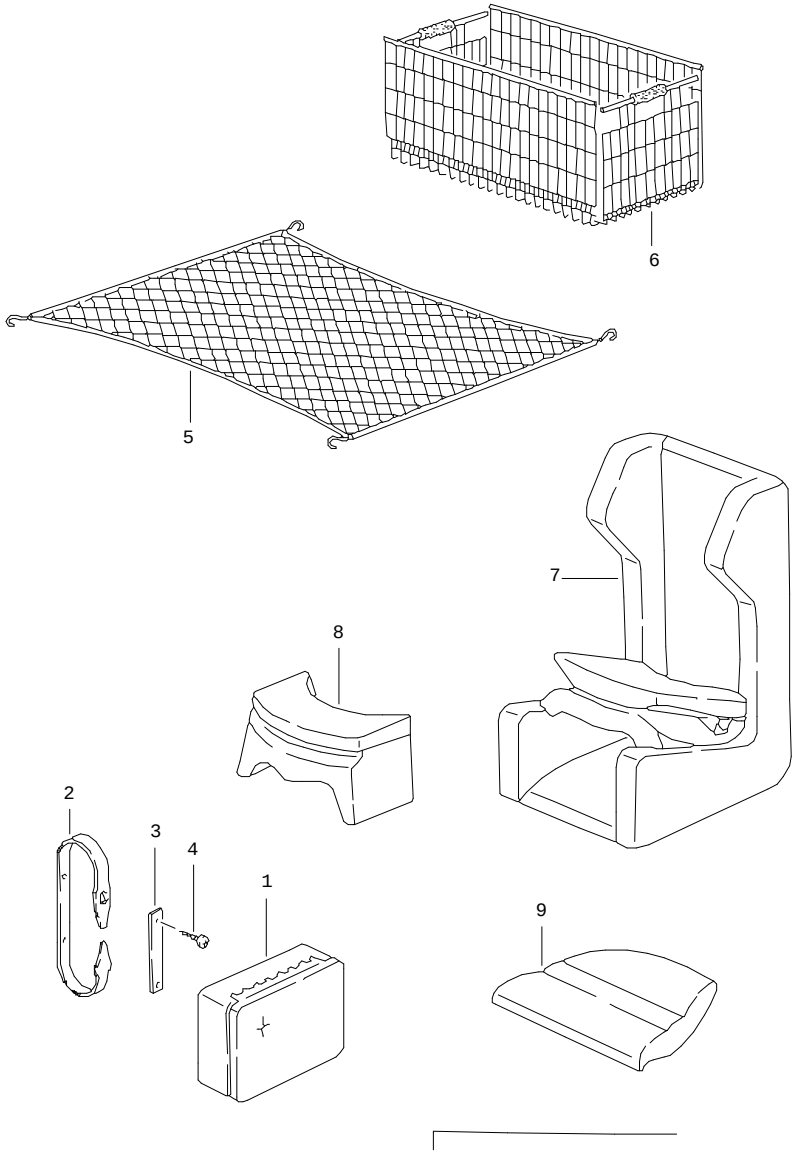


| Pos | Part Number | Name | Remarks | Qty | Model |
|---|---|---|---|---|---|
| | | accessories | | | |
| 1 | E 928 722 041 02 | first-aid kit | | 1 | |
| 2 | 171 860 273 | retaining strap<br>first-aid kit | | 1 | |
| 3 | 171 860 269 | retaining bracket<br>first-aid kit | | 1 | |
| 4 | 900 145 035 02 | counters. head tapp. screw<br>4,2 X 16 | | 2 | |
| 5 | 477 863 539 | luggage net | | 1 | |
| 6 | E 000 043 002 00 | car basket | | 1 | |
| 7 | 944 522 051 01 | child car seat<br>up to 6 years | | 1 | |
| 8 | 928 522 050 00 | child car seat<br>older than 4 years<br>only together with<br>child car seat cushion | | 1 | |
| 9 | 944 522 159 00 | child car seat cushion | /L | 1 | |
| | 4CR | black<br>porsche lettering cloth | | | |
| (9) | 944 522 160 00 | child car seat cushion | /R | 1 | |
| | 4CR | black<br>porsche lettering cloth | | | |
| | | - -- E N D -- - | | | |

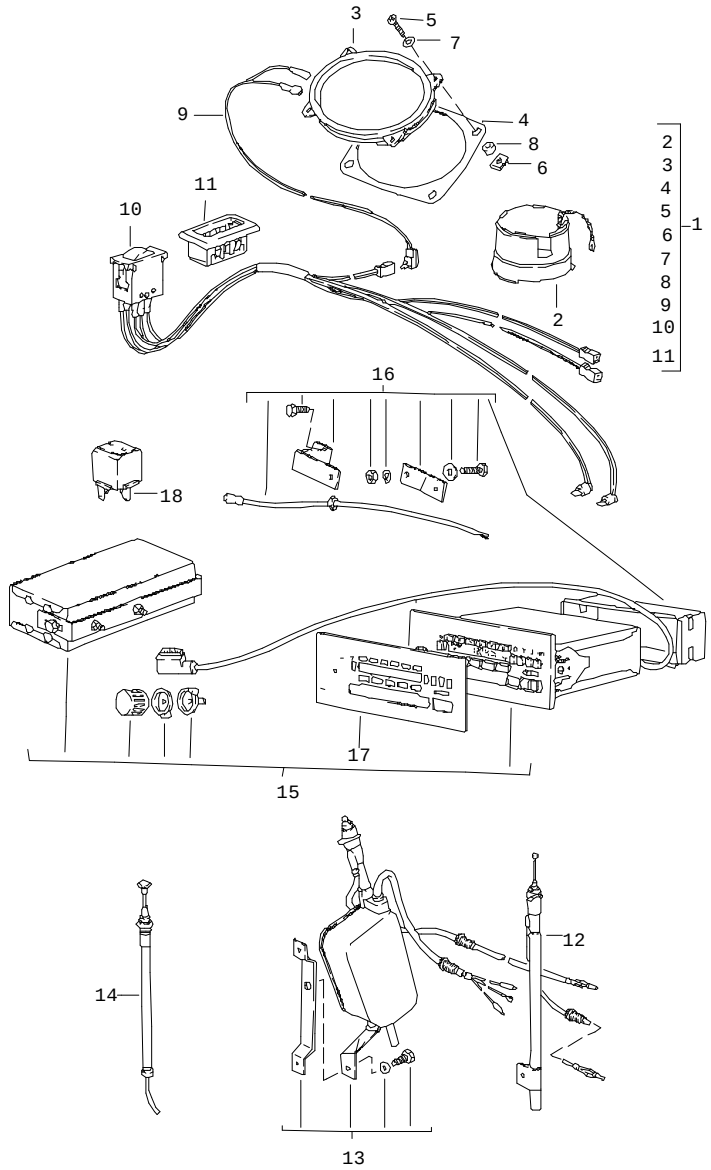


| Pos | Part Number | Name | Remarks | Qty | Model |
|---|---|---|---|---|---|
| | | radio<br>with<br>3<br>loudspeaker | -82 | | |
| (1) | E 477 035 907 | set<br>installation parts<br>radio<br>F >>92A04 15902<br>F >>93A01 41292<br>comprising: | | 1<br>X | |
| 2 | 477 905 209 C | screening ring | | 1 | |
| 3 | 944 645 451 00 | loudspeaker<br>rear<br>right<br>4 OHM | | 1 | |
| (3) | E 477 035 411 C | loudspeaker<br>rear<br>left<br>and<br>front<br>8 OHM | | 2 | |
| 4 | 477 035 999 | gasket<br>loudspeaker<br>rear | | 2 | |
| 5 | N 013 962 2 | tapping screw<br>B 3,9 X 16 | | 12 | |
| 6 | 999 507 071 00 | speed nut<br>B 3,9 X 11,6 | | 12 | |
| 7 | 900 151 028 02 | washer<br>4,1 | | 12 | |
| 8 | 477 035 375 | bush | | 8 | |
| (9) | E 477 035 440 A | cable for loudspeaker<br>rear<br>right | | 1 | |
| (9) | E 477 035 441 | cable for loudspeaker<br>rear<br>left<br>and<br>front | | 1 | |

| Pos | Part Number | Name | Remarks | Qty | Model |
|---|---|---|---|---|---|
| 1 | E 477 035 908 | set<br>installation parts<br>radio<br>with<br>fader<br>F 92A04 15903>><br>F 93A01 41293>><br>comprising: | | 1<br>X | |
| 2 | 477 905 209 C | screening ring | | 1 | |
| 3 | 944 645 451 00 | loudspeaker | | 3 | |
| 4 | 477 035 999 | gasket<br>loudspeaker<br>rear | | 2 | |
| 5 | N 013 962 2 | tapping screw<br>B 3,9 X 16 | | 12 | |
| 6 | 999 507 071 00 | speed nut<br>B 3,9 X 11,6 | | 12 | |
| 7 | 900 151 028 02 | washer<br>4,1 | | 12 | |
| 8 | 477 035 375 | bush | | 8 | |
| 9 | E 477 035 440 | cable for loudspeaker<br>front | | 1 | |
| (9) | E 477 035 440 A | cable for loudspeaker<br>rear<br>right | | 1 | |
| (9) | E 477 035 440 B | cable for loudspeaker<br>rear<br>left | | 1 | |
| 10 | 477 035 465 | fader<br>with<br>lines | | 1 | |
| 11 | 477 035 463 A | rose<br>for<br>fader | | 1 | |
| 12 | 477 035 503 A | antenna<br>manual | | 1 | 924/TURBO |
| (12) | E 477 035 503 C | antenna<br>black<br>manual | | 1 | GT |
| 13 | > 944 645 911 00 | automatic antenna | | 1 | 924/TURBO |
| 13 | 944 645 911 00 | automatic antenna | 85- | 1 | |
| 14 | 944 645 913 00 | antenna rod<br>for<br>automatic antenna<br>944.645.911.00 | | 1 | |
| 13 | E 477 035 510 A | automatic antenna<br>for | | 1 | GT |
| 14 | 477 035 513 | antenna rod<br>for<br>automatic antenna | | 1 | |
| | | car radio | | | |
| 15 | E 477 035 105 | radio<br>BAMBERG DIGITAL<br>SUPERARIMAT "DE" | | 1 | (CH),(D),(A) |
| 16 | E 477 035 619 | installation set | -81 | 1 | |
| 16 | E 477 035 619 | installation set | 82- | 1 | |
| 17 | 477 035 915 | cover | | 1 | (CH),(D),(A) |
| (15) | E 477 035 108 | radio<br>BAMBERG DIGITAL RW | | 1 | |
| 16 | E 477 035 619 | installation set | -81 | 1 | |
| (17) | 477 035 917 | cover | | 1 | |
| (15) | E 477 035 165 | radio<br>COBURG STEREO CR<br>SUPERARIMAT | | 1 | (CH),(D),(A) |
| (16) | E 477 035 617 | installation set | | 1 | |
| (15) | E 477 035 164 | radio<br>COBURG STEREO CR | | 1 | |
| (16) | E 477 035 617 | installation set | | 1 | |
| 18 | 321 919 505 | relay | | 1 | |

- -- E N D -- -

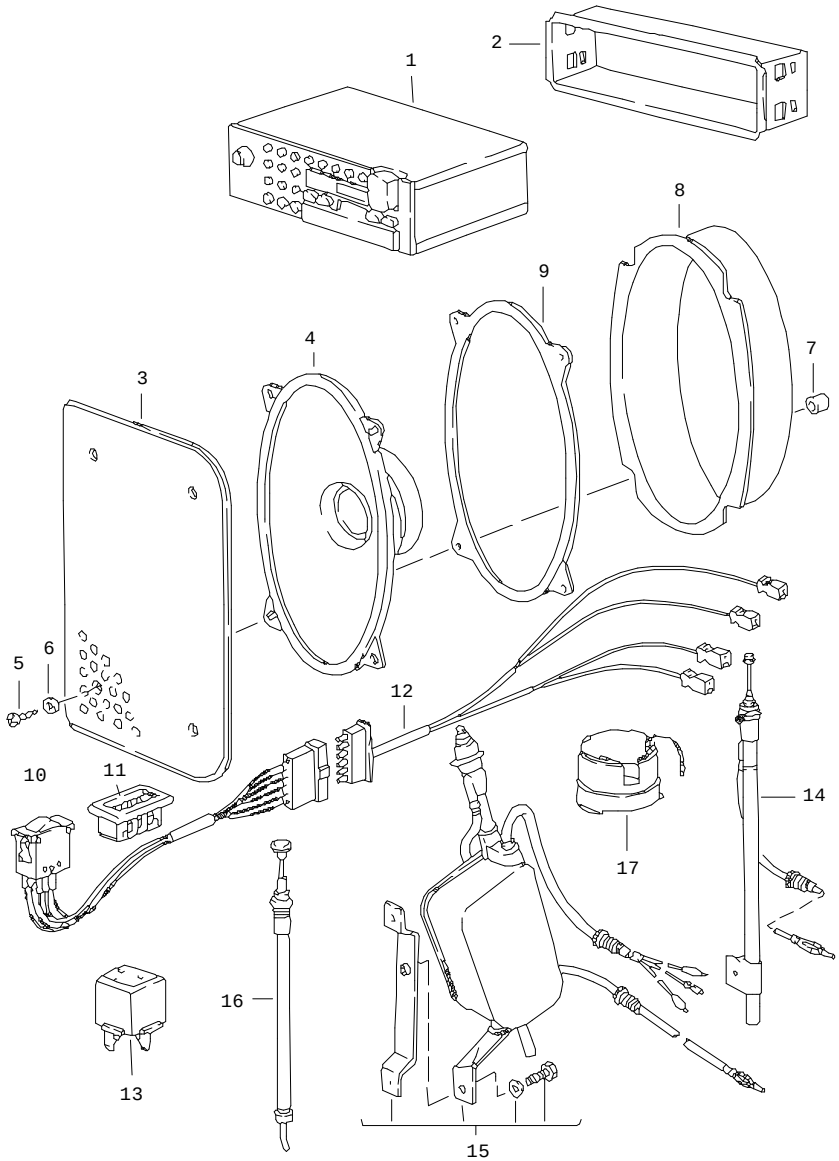


| Pos | Part Number | Name | Remarks | Qty | Model |
|---|---|---|---|---|---|
| | | radio<br>with<br>4<br>loudspeaker | 83- | | |
| 1 | > 911 645 106 00 | radio<br>KOELN SQR ARI | -83 | 1 | (D),(A),(CH) |
| (1) | E 911 645 106 01 | radio<br>KOELN SQR ARI | 84- | 1 | (D),(A),(CH) |
| 1 | > 911 645 147 00 | radio<br>ATLANTA SQR | -83 | 1 | |
| (1) | > 911 645 147 01 | radio<br>ATLANTA SQR | 84- | 1 | |
| - | 911 645 157 00 | radio<br>HAMBURG SQM 24 | 85- | 1 | (D),(A),(CH) |
| - | E 911 645 158 00 | radio<br>BOSTON SQM 23 | 85- | 1 | |
| 2 | 911 645 173 02 | retaining frame | | 1 | |
| 3 | 477 867 081 | loudspeaker grille | /V | 2 | |
| | 01C | black | | | |
| | 89S | brown | | | |
| 4 | 911 645 411 00 | loudspeaker | | 4 | |
| 5 | 900 145 041 07 | tapping screw | /V | 8 | |
| (5) | N 013 962 2 | tapping screw<br>3,9 X 16 | /H | 8 | |
| 6 | 900 151 028 02 | washer | /H | 8 | |
| 7 | 477 867 373 | bush | /V | 8 | |
| (7) | 477 035 375 | bush | /H | 8 | |
| 8 | 944 645 015 00 | water protection | /V | 2 | |
| 9 | 477 035 999 | gasket | /H | 2 | |
| 10 | 477 035 465 A | fader | | 1 | |
| 11 | 477 035 463 A | rose | | 1 | |
| 12 | E 477 035 440 C | wiring harness<br>loudspeaker | | 1 | |

| Pos | Part Number | Name | Remarks | Qty | Model | Pos | Part Number | Name | Remarks | Qty | Model |
|---|---|---|---|---|---|---|---|---|---|---|---|
| 13 | 321 919 505 | relay | | 1 | | | | | | | |
| (13) | 944 615 103 00 | switch unit<br>radio | 84- | 1 | | | | | | | |
| 14 | 477 035 503 A | antenna<br>manual | | 1 | | | | | | | |
| 15 | > 944 645 911 00 | automatic antenna | | 1 | | | | | | | |
| 16 | 477 035 513 | antenna rod<br>for<br>automatic antenna | | 1 | | | | | | | |
| 17 | 477 905 209 C | screening ring | | 1 | | | | | | | |
| | | - -- E N D -- - | | | | | | | | | |

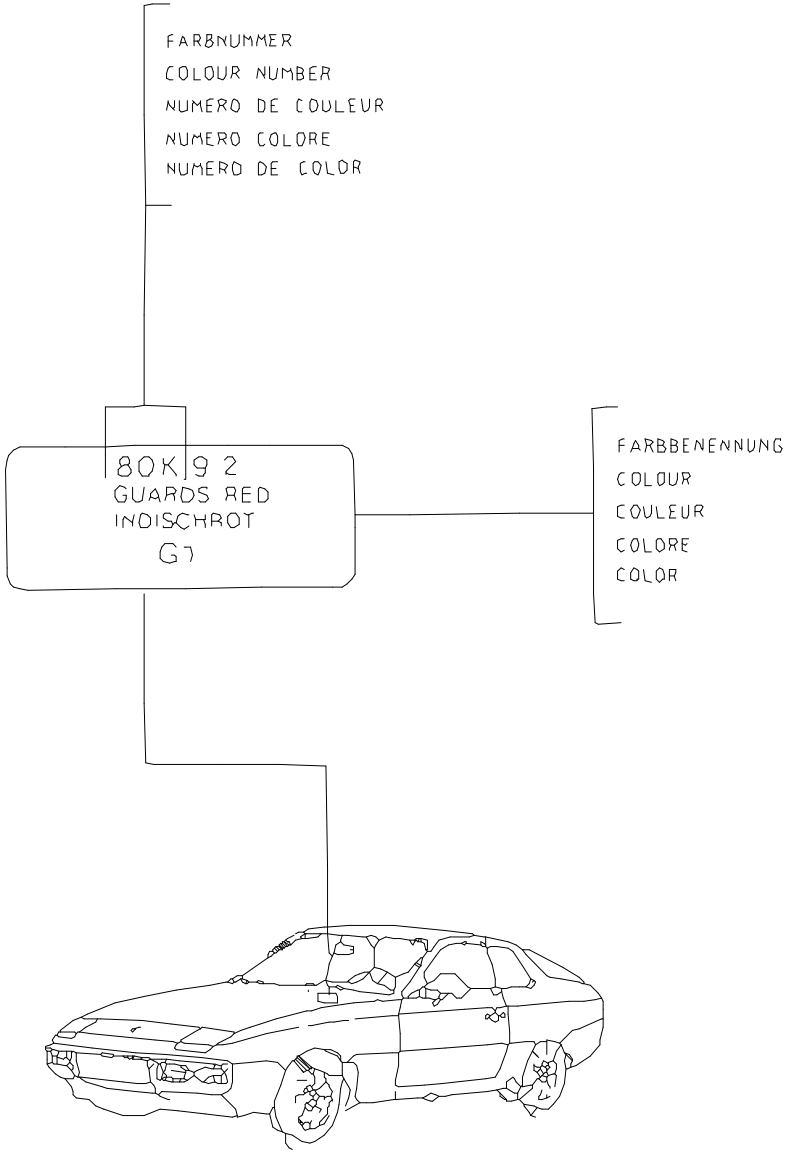


| Pos | Part Number | Name | Remarks | Qty | Model |
|---|---|---|---|---|---|
| | | lacquers<br>basic materials | | | |
| - | 911 096 050 00 | polyester filler<br>1 KG<br>GLASSIT-NON-FERRO | | X | |
| - | 911 096 051 00 | hardener<br>30 GR<br>GLASSIT<br>red | | X | |
| - | 911 096 052 00 | primer filler<br>1 LTR<br>GLASSOFIX | | X | |
| - | 911 096 053 00 | hardener<br>500 ML<br>GLASSOFIX | | X | |
| - | 911 096 054 00 | primer filler<br>1 LTR<br>GLASSODUR<br>white | | X | |
| - | 911 096 055 00 | hardener<br>500 ML<br>GLASSODUR | | X | |
| - | 911 096 056 00 | wash primer<br>GLASSOFIX 2K | | X | |
| - | 911 096 057 00 | hardener<br>1 LTR<br>GLASSOFIX | | X | |
| - | 911 096 058 00 | polyurethane plastic putty | | X | |
| - | 911 096 059 00 | hardener<br>1 KG | | X | |
| - | 911 096 060 00 | thinner<br>1 LTR | | X | |
| - | 911 096 061 00 | hardener<br>500 ML | | X | |
| - | 911 096 062 00 | additional lacquer<br>1 LTR | | X | |
| - | 911 096 063 00 | underbody protection<br>1 KG | | X | |

| Pos | Part Number | Name | Remarks | Qty | Model |
|---|---|---|---|---|---|
| - | E L 016 006 | nitro-cellulose thinner<br>2,5 L | | X | |
| - | E 000 043 001 00 | tin<br>SN 90 %<br>CA 200 G | | X | |
| | | acrylic lacquer<br>metallic<br>1L | | | |
| - | ALD 645 97A | diamond silver metallic | | X | 97A |
| - | LKL 0Y7 V00 | dolomite grey | | X | Y7V |
| - | ALD 645 Z7Z | gemini grey metallic | | X | Z7Z |
| - | ALD 645 B7V | graphite metallic | | X | B7V |
| - | ALD 645 A5Y | helios blue metallic | | X | A5Y |
| - | LKL 094 A00 | inari silver metallic | | X | 94A |
| - | LKL 0A3 V00 | indiana red metallic | | X | A3V |
| - | ALD 645 A1Y | KALAHARI-METALLIC | | X | A1Y |
| - | ALD 645 A6V | lhasa metallic | | X | A6V |
| - | ALD 645 Y7Z | meteor metallic | | X | Y7Z |
| - | ALD 645 Y9V | montego black metallic | | X | Y9V |
| - | ALD 645 B8Z | MAHAGONI-METALLIC | | X | B87 |
| - | ALD 645 D6V | ONYX-METALLIC | | X | D6V |
| - | ALD 645 Y5V | SAPHIR-METALLIC | | X | Y5V |
| - | ALD 645 Y4V | SATURN-METALLIC | | X | Y4V |
| - | ALD 645 D3V | sienna red metallic | | X | D3V |
| - | ALD 645 A3Y | surinam metallic | | X | A3Y |
| - | ALD 645 Y7U | stone grey metallic | | X | Y7U |
| - | ALD 645 Y7Y | zermatt silver metallic | | X | Y7Y |
| - | ALD 645 Y8V | sable brown metallic | | X | Y8V |
| - | 911 095 903 80 | synthetic resin prime coat<br>metallic | | X | |

| Pos | Part Number | Name | Remarks | Qty | Model |
|---|---|---|---|---|---|
| | 822 | garnet red metallic | | | 822 |
| | 30T | light blue metallic | | | M5Z |
| | 966 | light bronze metallic | | | M1V |
| | 33N | crystal green metallic | | | M3Y |
| | 304 | MINERVABLAU-METALLIC | | | M5Y |
| | 20C | moss green metallic | | | M6V |
| | 376 | PETROLBLAU-METALLIC | | | M5V |
| | 655 | platinum-metallic | | | M8U |
| | 810 | ruby red metallic | | | |
| | 708 | black-metallic | | | M9Y |
| | 956 | zinc metallic | | | M7V |
| - | 911 096 064 00 | clear lacquer<br>1L<br>GLASSODUR-MS 923-85 | | X | |
| | | final acrylic lacquer<br>1L | | | |
| - | LKL 0Y5 B00 | copenhagen blue | | X | L Y5B |
| - | LKL 030 C00 | malaga red | | X | L 30C |
| - | LKL 0E1 M00 | mexico beige | | X | L E1M |
| - | LKL 0A5 D00 | monaco blue | | X | L A5D |
| - | LKL 0Y1 L00 | pasadena yellow | | X | L Y1L |
| - | ALN 769 90E | alpine white | | X | L 90E |
| - | ALN 769 Y4A | amethyst | | X | L Y4A |
| - | ALN 769 A1M | colorado beige | | X | L A1M |
| - | ALN 769 Y7A | gabon grey | | X | L Y7A |
| - | ALN 769 A3B | gambia red | | X | L A3B |
| - | ALN 769 D8A | HAVANNABRAUN | | X | L D8A |
| - | ALN 769 30C | malaga red | | X | L 30C |
| - | ALN 769 Y5A | mauritius blue | | X | L Y5A |

| Pos | Part Number | Name | Remarks | Qty | Model |
|---|---|---|---|---|---|
| - | ALN 769 E1M | mexico beige | | X | L E1M |
| - | ALN 769 A5D | monaco blue | | X | L A5D |
| - | ALN 769 041 | black | | X | L 041 |
| - | ALN 769 B6A | sunda green | | X | L B6A |
| - | ALN 769 Y3B | venus red | | X | L Y3B |
| - | 911 095 902 60 | final acrylic lacquer | | X | |
| | 601 | flieder | | | L M7A |
| | 027 | guards red | | | L M3A |
| | 451 | mocha black | | | 451 |
| | 536 | pastel beige | | | L M1N |
| | 700 | black | | | L 041 |
| | | paint touch-up applicator | | | |
| - | L 090 E01 | alpine white | | X | L 90E |
| - | E L 0Y4 A01 | amethyst | | X | L Y4A |
| - | L 0Y7 A01 | gabon grey | | X | L Y7A |
| - | E L 0A3 B01 | gambia red | | X | L A3B |
| - | E L 0D8 A01 | HAVANNABRAUN | | X | L D8A |
| - | E L 0Y5 B01 | copenhagen blue | | X | L Y5B |
| - | E L 030 C01 | malaga red | | X | L 30C |
| - | E L 0Y5 A01 | mauritius blue | | X | L Y5A |
| - | E L 0E1 M01 | mexico beige | | X | L E1M |
| - | E L 0A5 D01 | monaco blue | | X | L A5D |
| - | E L 0Y1 L01 | pasadena yellow | | X | L Y1L |
| - | E L 0B6 A01 | sunda green | | X | L B6A |
| - | E L 0Y3 B01 | venus red | | X | L Y3B |
| - | 911 095 932 20 | paint touch-up applicator | | X | |
| | 601 | flieder | | | L M7A |

| Pos | Part Number | Name | Remarks | Qty | Model |
|---|---|---|---|---|---|
| | 027 | guards red | | | L M3A |
| | 451 | mocha black | | | L M9V |
| | 536 | pastel beige | | | L M1N |
| | 700 | black | | | L 041 |
| | | paint touch-up applicator set comprising: paint touch-up applicator top-coat paint paint touch-up applicator clear lacquer | | | |
| - | E L 097 A02 | diamond silver metallic | | X | 97A |
| - | E L 0Y7 V02 | dolomite grey | | X | Y7V |
| - | E L 0Z7 Z02 | gemini grey metallic | | X | Z7Z |
| - | E L 0B7 V02 | graphite metallic | | X | B7V |
| - | E L 0A5 Y02 | helios blue metallic | | X | A5Y |
| - | E L 094 A02 | inari silver metallic | | X | 94A |
| - | E L 0A3 V02 | indiana red metallic | | X | A3V |
| - | E L 0A6 V02 | lhasa metallic | | X | A6V |
| - | E L 0A1 Y02 | KALAHARI-METALLIC | | X | A1Y |
| - | E L 0Y7 Z02 | meteor metallic | | X | Y7Z |
| - | E L 0Y9 V02 | montego black metallic | | X | Y9V |
| - | E L 0D6 V02 | ONYX-METALLIC | | X | D6V |
| - | E L 0Y5 V02 | SAPHIR-METALLIC | | X | Y5V |
| - | E L 0Y4 V02 | SATURN-METALLIC | | X | Y4V |
| - | E L 0D3 V02 | sienna red metallic | | X | D3V |
| - | E L 0A3 Y02 | surinam metallic | | X | A3Y |
| - | E L 0Y7 U02 | stone grey metallic | | X | Y7U |
| - | L 0Y7 Y02 | zermatt silver metallic | | X | Y7Y |
| - | E L 0Y8 V02 | sable brown metallic | | X | Y8V |

| Pos | Part Number | Name | Remarks | Qty | Model | Pos | Part Number | Name | Remarks | Qty | Model |
|---|---|---|---|---|---|---|---|---|---|---|---|
| - | 911 095 933 20 | paint touch-up applicator | | X | | | | | | | |
| | 655 | platinum-metallic | | | | | | | | | |
| | 708 | black-metallic | | | | | | | | | |
| | 822 | garnet red metallic | | | M6Y | | | | | | |
| | 33N | crystal green metallic | | | M3Y | | | | | | |
| | 966 | light bronze metallic | | | M1V | | | | | | |
| | 304 | MINERVABLAU-METALLIC | | | M5Y | | | | | | |
| | 20C | moss green metallic | | | M6V | | | | | | |
| | 956 | zinc metallic | | | M7V | | | | | | |
| | 30T | light blue metallic | | | | | | | | | |
| | 376 | PETROLBLAU-METALLIC | | | | | | | | | |
| | | - -- E N D -- - | | | | | | | | | |

| Model | Year | MG | SG | Illustration | Restrictions | Update | | |
|---|---|---|---|---|---|---|---|---|
| 924 | 85 | 0 | 05 | 5-00 | | 179 | 9:52 | 16.08.2004 |

| Pos | Part Number | Name | Remarks | Qty | Model |
|---|---|---|---|---|---|
| | | securing liquid<br>sealing compound<br>preservative agent | | | |
| | | securing liquid | | | |
| - | 928 101 921 00 | loctite<br>-270-<br>10 CCM<br>high strength | | X | |
| - | 000 043 012 00 | loctite<br>-221-<br>10 CCM<br>low strength | | X | |
| | | sealing compound | | | |
| - | 000 043 010 00 | loctite<br>-574-<br>50 CCM | | X | |
| - | 000 043 011 00 | loctite<br>-638-<br>10 CCM<br>for<br>balance shaft | | X | |
| - | E 000 043 013 00 | loctite<br>adhesive remover<br>-80646-<br>spraying can | | X | |
| - | E AMV 176 000 05 | adhesive sealing compound<br>310 CCM | | 1 | |
| | | loctite<br>for pasting<br>metal<br>glass<br>ceramics<br>thermoset plastic<br>adhesive set<br>comprising: | | X | |
| - | 000 043 051 00 | adhesive<br>loctite<br>-317-<br>50 CCM | | X | |
| - | 000 043 202 65 | loctite<br>AKTIVATOR NF 736<br>180 CCM | | X | |
| - | 000 043 019 01 | sealing compound<br>SILASTIK 730 RTV<br>90 CCM | | X | |
| - | 000 043 004 00 | mounting paste<br>optimoly ht<br>1 90-g tube | | X | |

| Model | Year | MG | SG | Illustration | Restrictions | Update | | |
|---|---|---|---|---|---|---|---|---|
| 924 | 85 | 0 | 05 | 5-00 | | 179 | 9:52 | 16.08.2004 |

| Pos | Part Number | Name | Remarks | Qty | Model |
|---|---|---|---|---|---|
| - | 000 043 020 00 | optimoly<br>mounting paste<br>OPTIMOLY - TA<br>1 tube 100 g<br>silver | | X | |
| - | 000 043 110 01 | grease<br>OPTITEMP PU35<br>1 tube 100 g | | X | |
| - | 000 043 204 21 | grease<br>for lock cylinder<br>spraying can<br><br>preservative agent | | X | |
| - | E 999 571 062 00 | care kit<br>comprising:<br>suitcase | | 1 | |
| - | E 999 901 013 40 | liquid preservative | | 1 | |
| - | 999 901 014 41 | cleaning agents | | 1 | |
| - | E 999 901 015 40 | polisher | | 1 | |
| - | E 999 901 016 40 | tar remover | | 1 | |
| - | E 999 901 017 40 | dashboard cleaner | | 1 | |
| - | E 999 901 018 40 | paint polish | | 1 | |
| - | 999 901 019 41 | insect remover | | 1 | |
| - | E 999 901 020 40 | spot remover | | 1 | |
| - | E 999 901 021 40 | polishing cotton | | 1 | |
| - | E 999 901 022 40 | polishing cloth | | 1 | |
| - | 000 044 000 02 | preservative agent<br>250 ML | | X | |
| - | 999 901 017 41 | window cleaner<br>summer<br>250 ML | | X | |
| - | E 999 901 033 40 | window cleaner<br>winter<br>1000 ML | | X | |
| - | E 999 901 036 40 | car shampoo<br>refilling bottle<br>1000 ML | | X | |
| - | 999 917 803 00 | window cleaner<br>spray bottle<br>250 ML | | X | |
| - | 928 628 931 00 | silicone remover<br>1000 ML | | X | |

| Model | Year | MG | SG | Illustration | Restrictions | Update | | |
|---|---|---|---|---|---|---|---|---|
| 924 | 85 | 0 | 05 | 5-00 | | 179 | 9:52 | 16.08.2004 |

| Pos | Part Number | Name | Remarks | Qty | Model |
|---|---|---|---|---|---|
| - | E 999 901 030 40 | rim cleaner<br>spray bottle<br>500 ML | | X | |
| - | 999 901 031 40 | rim cleaner<br>refilling bottle<br>1000 ML | | X | |
| | | - -- E N D -- - | | | |

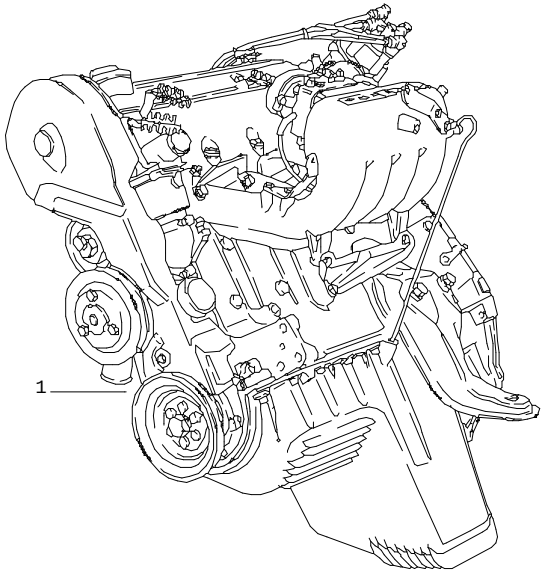


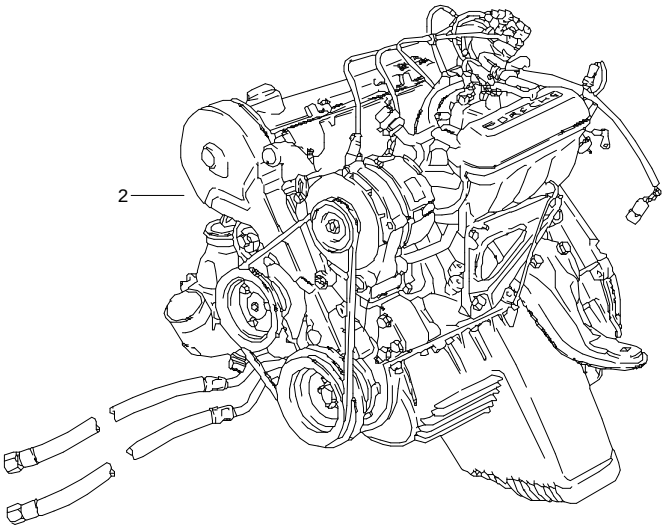


| Pos | Part Number | Name | Remarks | Qty | Model |
|---|---|---|---|---|---|
| | | replacement engine<br>M>>65X12345 | | | XK XJ<br>TURBO<br>M31.01<br>M31.03<br>M31.50 |
| 1 | E 047 100 015 F | replacement engine<br>92 KW (125 DIN-PS)<br>for<br>M 062<br>use also:<br>056.129.777 | /LL | 1 | 924 XK |
| (1) | 047 100 015 G | replacement engine<br>92 KW (125 DIN-PS) | /LL | 1 | 924 XK AUT. |
| | 001 | M >> XK 04 9526 | | | |
| | 002 | M XK 04 9527 >> | | | |
| | | for<br>M62<br>use also:<br>056.129.777 | | | |
| (1) | A 047 100 015 R | replacement engine<br>92 KW (125 DIN-PS)<br>for<br>M479<br>use also:<br>047.131.013 A | /RL | 1 | 924 XJ |
| (1) | 047 100 015 S | replacement engine<br>92 KW (125 DIN-PS) | /RL | 1 | 924 XJ AUT. |
| | 001 | M >> XJ 00 6058 | | | |
| | 002 | M XJ 00 6059 >> | | | |
| 2 | A 931 100 201 00 | replacement engine<br>125 KW (170 DIN-PS) | /LL 80 | 1 | TURBO<br>M31.01 |
| (2) | A 932 100 001 00 | replacement engine<br>125 KW (170 DIN-PS) | /RL 80 | 1 | TURBO<br>M31.01 |
| (2) | A 931 100 203 00 | replacement engine<br>130 KW (177 DIN-PS) | /LL 81- | 1 | TURBO<br>M31.03 |
| (2) | A 931 100 021 05 | replacement engine<br>130 KW (177 DIN-PS) | /LL 81- | 1 | TURBO<br>M31.03 (S) |
| (2) | 932 100 021 00 | replacement engine<br>130 KW (177 DIN-PS) | /RL 81- | 1 | TURBO<br>M31.03 |

| Pos | Part Number | Name | Remarks | Qty | Model |
|---|---|---|---|---|---|
| (2) | A 932 100 021 01 | replacement engine<br>130 KW (177 DIN-PS) | /RL 81- | 1 | TURBO<br>M31.03 (AUS) |
| (2) | > 931 100 250 00 | replacement engine<br>154 KW (210 DIN-PS) | /LL 81 | 1 | GT<br>M31.50 |
| (2) | A 932 100 021 02 | replacement engine<br>154 KW (210 DIN-PS) | /RL 81 | 1 | GT<br>M31.50 |
| | | - -- E N D -- - | | | |

| Pos | Part Number | Name | Remarks | Qty | Model |
|---|---|---|---|---|---|
| | | | | | |

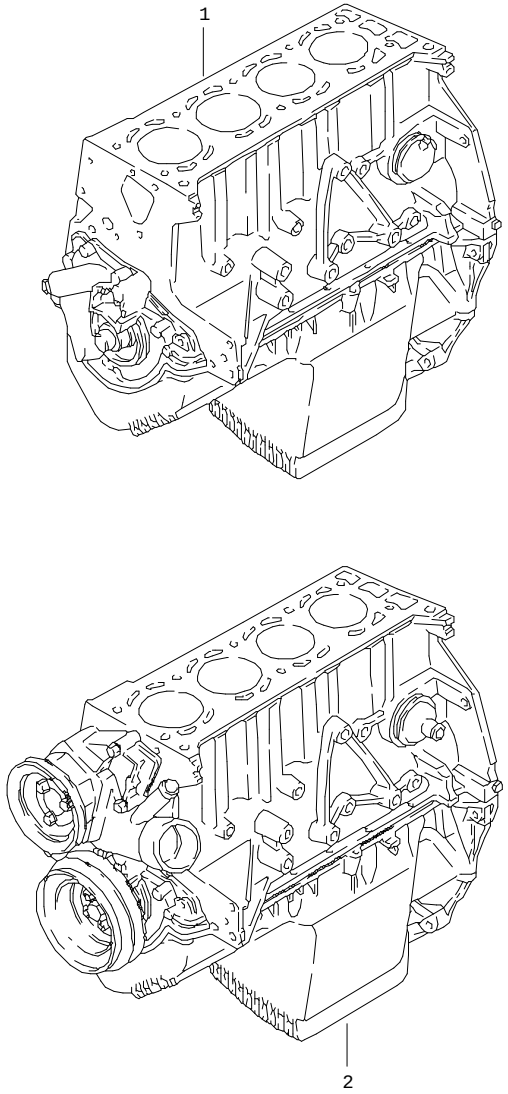


| Pos | Part Number | Name | Remarks | Qty | Model |
|---|---|---|---|---|---|
| | | short engine | | | |
| | | short engine<br>with<br>crankshaft<br>piston<br>oil pump | | | |
| 1 | > 047 100 103 F | short engine<br>92 KW (125 DIN-PS)<br>for<br>MOD.80/81<br>use also:<br>052.103.129.A | | 1 | 924 XJ XK |
| | | short engine<br>with<br>crankshaft<br>piston<br>oil pump<br>water pump | | | |
| 2 | > 047 100 031 | short engine<br>125 KW (170 DIN-PS) | 80 | 1 | TURBO<br>M31.01 |
| 2 | > 047 100 031 B | short engine<br>130 KW (177 DIN-PS) | 81- | 1 | TURBO<br>M31.03 |
| 2 | 047 100 031 D | short engine<br>154 KW (210 DIN-PS) | 81 | 1 | GT<br>M31.50 |
| | | - -- E N D -- - | | | |

| Model | Year | MG | SG | Illustration | Restrictions | Update | 9:53 | 16.08.2004 | PORSCHE | PET | PORSCHE |
|---|---|---|---|---|---|---|---|---|---|---|---|
| 924 | 85 | 1 | 01 | 101-10 | | 179 | | | | | |

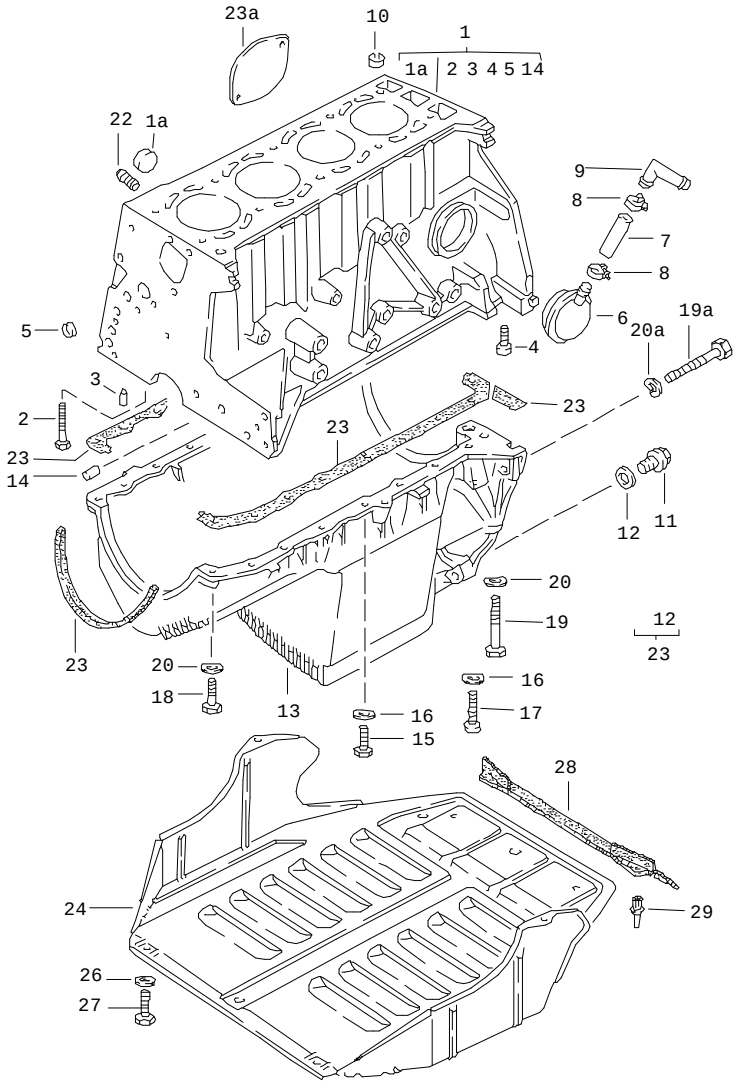


| Pos | Part Number | Name | Remarks | Qty | Model |
|---|---|---|---|---|---|
| | | cylinder block<br>with pistons<br>oil pan<br>protective plate f. engine | | | |
| 1 | > 047 103 101 E | cylinder block<br>with pistons<br>MOD. 80/81<br>use also:<br>052.103.129.A | | 1 | XK XJ |
| 1 | > 047 103 101 D | cylinder block<br>with pistons | 80 | 1 | M31.01/02 |
| 1 | > 931 103 101 00 | cylinder block<br>with pistons | 81- | 1 | M31.03 |
| 1 | > 931 103 101 01 | cylinder block<br>with pistons | 81 | 1 | M31.50 |
| 1A | 059 103 113 | cover | | 5 | |
| 2 | E N 010 488 3 | hexagon-head bolt<br>M 12 X 85 | | 10 | |
| 3 | 999 012 034 00 | straight pin<br>8 H 6 X 12 | | 10 | |
| 4 | N 014 724 3 | pan-head screw<br>M 10 X 20 | | 2 | |
| 5 | N 011 903 3 | cover<br>16 | | 2 | |
| 5 | N 011 907 4 | cover<br>14 | | 1 | |
| 6 | 052 103 129 A | bleeder | -81 | 1 | XJ XK |
| (6) | 931 107 063 00 | bleeder | | 1 | VC TURBO/GT |
| (6) | 931 107 063 00 | bleeder | 82- | 1 | XJ XK |
| - | N 020 343 1 | hose<br>18 X 2,5 | | * | |
| 7 | - | 40 MM | | 1 | XJ XK |
| 8 | 999 512 346 00 | hose clamp<br>LC 16-25 | | 2 | XJ XK VC |
| 9 | 047 103 227 | elbow | | 1 | XJ XK |
| (9) | 477 133 203 | elbow | | 1 | XJ XK (AUS) |

| Pos | Part Number | Name | Remarks | Qty | Model |
|---|---|---|---|---|---|
| 10 | 046 103 139 | tensioning sleeve | | 2 | |
| 11 | 059 103 193 | screw plug<br>M 26 X 1,5 | | 1 | |
| (11) | N 902 889 01 | screw plug<br>M 14 X 1,5 | | 1 | |
| 12 | * N 043 854 1 | sealing ring<br>C 26 X 32 | | 1 | |
| (12) | 900 123 007 30 | sealing ring<br>A 14 X 18 | | 1 | |
| 13 | 047 103 603 A | oil pan<br>use also:<br>047.103.635 | | 1 | XJ XK VC |
| (13) | 047 103 603 B | oil pan<br>use also:<br>047.103.635 | | 1 | TURBO GT |
| 14 | E N 043 207 2 | straight pin<br>8 H 8 X 14 | | 2 | |
| 15 | N 014 703 2 | pan-head screw<br>M 6 X 18 | | 13 | |
| 16 | N 012 226 5 | spring washer<br>B 6 | | 13 | |
| 17 | N 014 722 2 | pan-head screw<br>M 6 X 60 | | 2 | |
| 18 | N 014 725 2 | pan-head screw<br>M 8 X 25 | | 2 | |
| 19 | N 100 113 01 | pan-head screw<br>M 8 X 140 | | 1 | |
| (19) | N 044 724 2 | pan-head screw<br>M 8 X 70 | | 1 | |
| 19A | N 010 479 2 | hexagon-head bolt<br>M 10 X 88 | | 2 | |
| (19A) | N 010 490 3 | hexagon-head bolt<br>M 12 X 55 | | 2 | |
| (19A) | N 010 467 1 | hexagon-head bolt<br>M 12 X 45 | | 4 | |
| 20 | N 012 241 11 | spring washer<br>B 8 | | 4 | |
| 20A | 900 028 032 02 | spring washer<br>B 10 | | 3 | |
| (20A) | 900 028 014 02 | spring washer<br>B 12 | | 4 | |
| 22 | 059 115 721 | union | | 1 | 924 |
| 23 | * 060 198 041 A | set of seals<br>for oil sump | | 1 | |
| 23A | 931 101 131 00 | cover<br>protective plate f. engine | | 1 | TURBO/GT |
| 24 | 477 407 583 C | protective plate<br>F >>92CN4 02197<br>F >>93CN1 00305 | | 1 | 924/TURBO |
| (24) | 944 341 161 03 | protective plate<br>F 92CN4 02198>><br>F 93CN1 00306>> | | 1 | 924/TURBO |
| (24) | 477 407 583 D | protective plate | | 1 | GT |
| 26 | 900 151 003 02 | washer<br>6,1 | | 6 | |
| 27 | N 010 215 13 | hexagon-head bolt<br>M 6 X 15 | | 6 | |
| 28 | 477 407 587 | protection cover<br>F >>92CN4 02197<br>F >>93CN1 00305 | | 1 | TURBO/GT |
| 29 | N 038 549 1 | expansion rivet<br>A 8 X 12<br>F >>92CN4 02197<br>F >>93CN1 00305 | | 2 | TURBO/GT |
| | | - -- E N D -- - | | | |

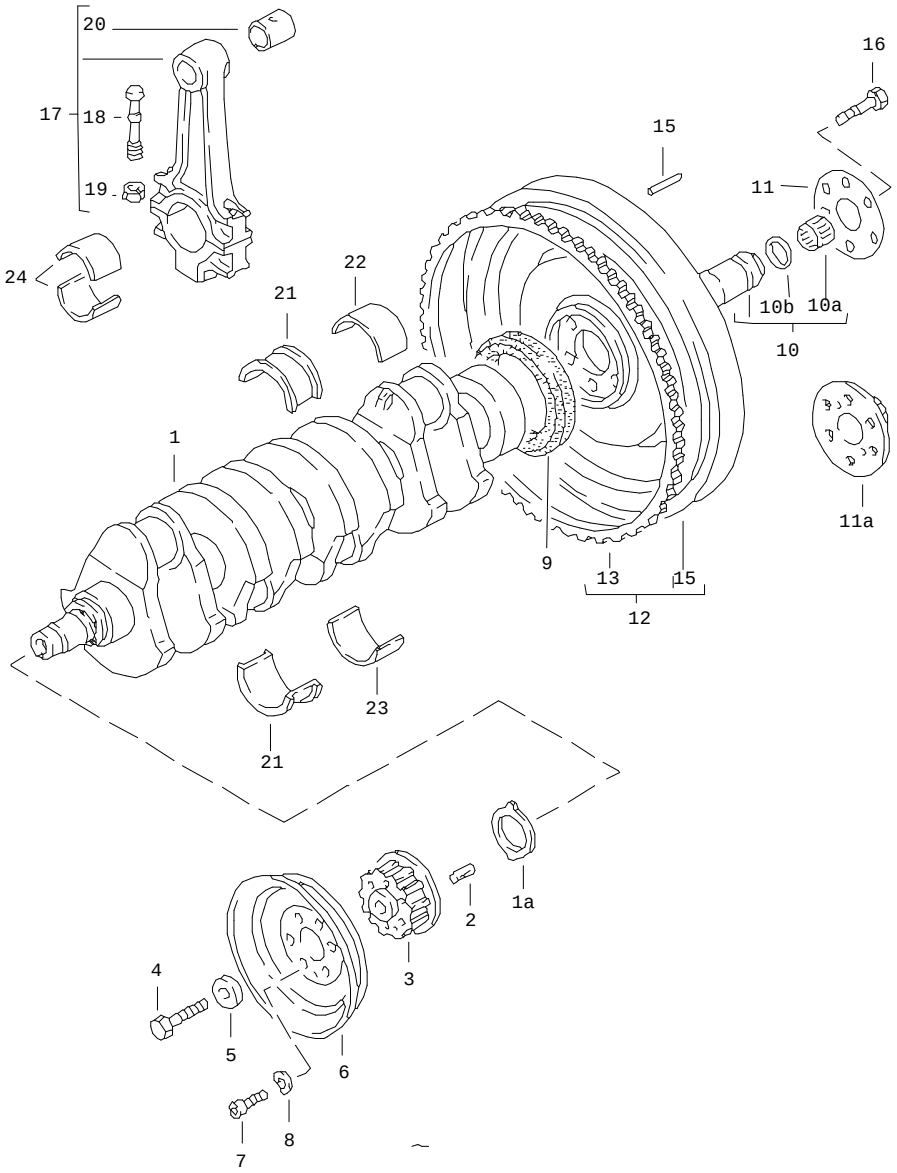


| Pos | Part Number | Name | Remarks | Qty | Model |
|---|---|---|---|---|---|
| | | crankshaft<br>connecting rod | | | |
| 1 | > 046 105 021 A | crankshaft | | 1 | |
| 1A | 046 105 177 | driver | | 1 | |
| 2 | N 023 255 1 | tensioning sleeve<br>4 X 12 | | 1 | |
| 3 | 048 105 209 | toothed belt pulley | | 1 | |
| 4 | N 900 074 01 | hexagon-head bolt<br>M 16 X 1,5 X 50 | | 1 | |
| 5 | 048 105 235 | washer | | 1 | |
| 6 | 048 105 255 A | v-belt pulley<br>simple | /LL | 1 | 924 |
| (6) | 046 105 255 B | v-belt pulley<br>simple | /RL | 1 | 924 |
| (6) | 046 105 255 F | v-belt pulley<br>double | | 1 | 924 |
| (6) | 477 105 255 | v-belt pulley<br>triple | | 1 | |
| 7 | N 014 725 2 | pan-head screw<br>M 8 X 25 | | 6 | |
| 8 | N 012 241 11 | spring washer<br>B 8 X 15 | | 6 | |
| 9 | * 059 103 051 D | sealing ring | | 1 | |
| 10 | 047 105 169 A | sleeve<br>with<br>needle-roller bearing | | 1 | 924 |
| (10) | 931 102 111 00 | deep-groove ball bearing | | 1 | TURBO |
| 10A | 047 105 313 | needle-roller bearing | | 1 | 924 |
| 10B | 047 105 311 | shaft seal<br>15 X 21 X 5/7 | | 1 | 924 |
| 11 | 046 105 175 | washer | | 1 | |
| 11A | 047 105 179 | stop | AUT. | 1 | 924 |
| 12 | 046 105 269 B | flywheel | | 1 | 924 |

| Pos | Part Number | Name | Remarks | Qty | Model |
|---|---|---|---|---|---|
| (12) | 931 102 205 05 | flywheel<br>only together with<br>clutch plate<br>931.116.011.04 | 80 | 1 | M31.01/02 |
| (12) | 931 102 206 01 | flywheel<br>only together with<br>clutch plate<br>931.116.011.04 | 81- | 1 | M31.03/50 |
| (12) | 931 102 206 03 | flywheel<br>only together with<br>clutch plate<br>944.116.012.04 | 81- | 1 | M31.03 |
| 13 | 046 105 275 A | starter ring | | 1 | 924 |
| 15 | N 013 210 1 | straight pin<br>6 M 6 X 16 | | 3 | 924 |
| 16 | N 040 110 1 | hexagon-head bolt<br>M 12 X 1,5 X 22 | | 6 | 924 |
| 16 | E 900 083 021 08 | hexagon-head bolt<br>M 12 X 1,5 X 20<br>only together with<br>flywheel<br>931.102.205.05<br>931.102.206.01 | | 6 | M31.01/02/03<br>04/50 |
| 16 | 931 102 202 00 | hexagon-head bolt<br>M 12 X 1,5 X 18<br>only together with<br>flywheel<br>931.102.206.03 | 81- | 6 | M31.03 |
| | | connecting rod | | | |
| 17 | * 046 198 401 | connecting rod<br>1 set | | 1 | |
| 18 | E 059 105 425 A | connecting rod bolt | | 8 | |
| 19 | * 059 105 427 A | hexagon nut | | 8 | |
| 20 | E 059 105 431 | connecting rod bush | | 4 | |
| | | crankshaft bearing | | | |
| 21 | * 046 105 501 | crankshaft bearing<br>thrust bearing | | 2 | |
| (21) | * 046 105 507 | crankshaft bearing<br>thrust bearing<br>undersize<br>0,25 MM | | X | |
| (21) | * 046 105 513 | crankshaft bearing<br>thrust bearing<br>undersize<br>0,50 MM | | X | |
| (21) | * 046 105 519 | crankshaft bearing<br>thrust bearing<br>undersize<br>0,75 MM | | X | |
| 22 | * 046 105 561 | crankshaft bearing<br>numbers 1,2,4,5<br>upper | | 4 | |
| (22) | * 046 105 567 | crankshaft bearing<br>numbers 1,2,4,5<br>upper<br>undersize 0,25 mm | | X | |
| (22) | * 046 105 573 | crankshaft bearing<br>numbers 1,2,4,5<br>upper<br>undersize 0,50 mm | | X | |
| (22) | * 046 105 579 | crankshaft bearing<br>numbers 1,2,4,5<br>upper<br>undersize 0,75 mm | | X | |
| 23 | * 046 105 591 | crankshaft bearing<br>numbers 1,2,4,5<br>lower | | 4 | |
| (23) | E 046 105 597 | crankshaft bearing<br>numbers 1,2,4,5<br>lower<br>undersize 0,25 mm | | X | |
| (23) | * 046 105 603 | crankshaft bearing<br>NR. 1, 2, 4, 5<br>lower<br>undersize 0,50 mm | | X | |
| (23) | * 046 105 609 | crankshaft bearing<br>NR. 1, 2, 4, 5<br>lower<br>undersize 0,75 mm | | X | |
| | | connecting-rod bearing | | | |

| Pos | Part Number | Name | Remarks | Qty | Model | Pos | Part Number | Name | Remarks | Qty | Model |
|---|---|---|---|---|---|---|---|---|---|---|---|
| 24 | E 046 105 701 | connecting-rod bearing | | 8 | | | | | | | |
| (24) | E 046 105 707 | connecting-rod bearing<br>undersize 0,25 mm | | X | | | | | | | |
| (24) | E 046 105 713 | connecting-rod bearing<br>undersize 0,50 mm | | X | | | | | | | |
| (24) | * 046 105 719 | connecting-rod bearing<br>undersize 0,75 mm | | X | | | | | | | |
| | | - -- E N D -- - | | | | | | | | | |

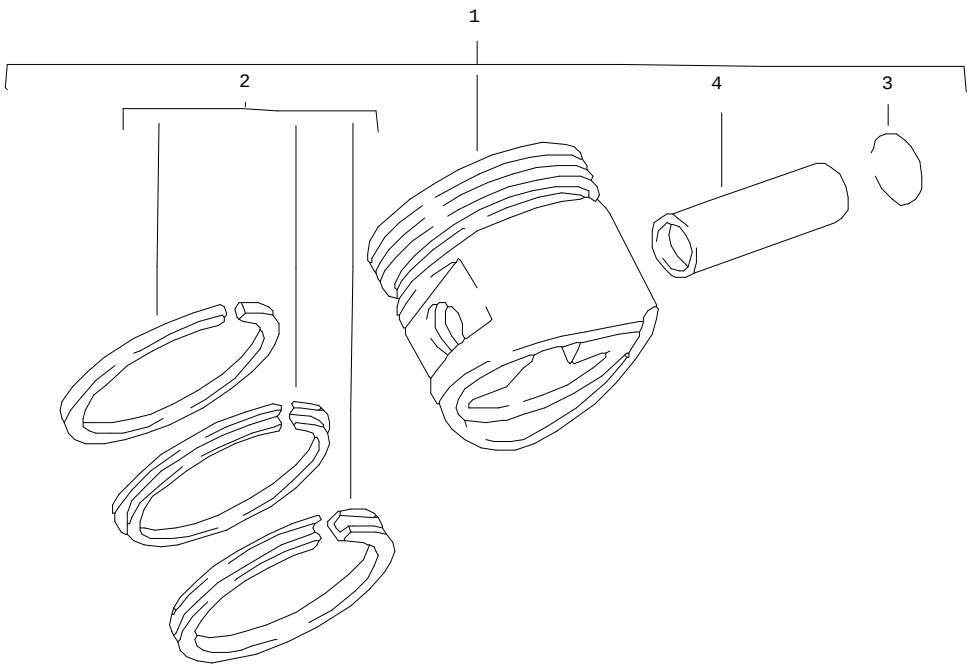


| Pos | Part Number | Name | Remarks | Qty | Model |
|---|---|---|---|---|---|
| | | piston<br>piston rings | | | |
| 1 | 047 107 065 F | piston | | 4 | XJ XK |
| | 001 | 86,48 MM | | | |
| | 002 | 86,49 MM | | | |
| | 003 | 86,50 MM | | | |
| 1 | 047 107 071 F | piston<br>oversize<br>86,75 MM | | 4 | XJ XK |
| 1 | E 047 107 081 F | piston<br>oversize<br>87,00 MM | | 4 | XJ XK |
| 1 | 047 107 091 F | piston<br>oversize<br>87,50 MM | | 4 | XJ XK |
| (1) | 931 103 045 02 | piston<br>86,50 MM<br>MAHLE<br>size 1 | 80 | 4 | M31.01/02 |
| (1) | E 931 103 045 12 | piston<br>86,50 MM<br>MAHLE<br>size 2 | 80 | 4 | M31.01/02 |
| (1) | E 931 103 045 22 | piston<br>86,50 MM<br>MAHLE<br>size 3 | 80 | 4 | M31.01/02 |
| (1) | 931 103 051 01 | piston<br>86,50 MM<br>MAHLE<br>size 1 | 81- | 4 | M31.03 |
| (1) | 931 103 051 11 | piston<br>86,50 MM<br>MAHLE<br>size 2 | 81- | 4 | M31.03 |
| (1) | 931 103 051 21 | piston<br>86,50 MM<br>MAHLE<br>size 3 | 81- | 4 | M31.03 |

| Pos | Part Number | Name | Remarks | Qty | Model |
|---|---|---|---|---|---|
| (1) | 931 103 051 01 | piston<br>86,50 MM<br>MAHLE<br>size 1 | 81- | 4 | M31.03 |
| (1) | 931 103 051 11 | piston<br>86,50 MM<br>MAHLE<br>size 2 | 81- | 4 | M31.03 |
| (1) | 931 103 051 21 | piston<br>86,50 MM<br>MAHLE<br>size 3 | 81- | 4 | M31.03 |
| (1) | 931 103 042 01 | piston<br>86,50 MM<br>- KS -<br>size 1 | 81 | 4 | M31.50 |
| (1) | E 931 103 042 11 | piston<br>86,50 MM<br>- KS -<br>size 2 | 81 | 4 | M31.50 |
| (1) | E 931 103 042 21 | piston<br>86,50 MM<br>- KS -<br>size 3 | 81 | 4 | M31.50 |
| (1) | E 931 103 045 51 | piston<br>86,75 MM<br>MAHLE<br>size 1 | 80 | 4 | M31.01/02 |
| (1) | 931 103 045 52 | piston<br>86,75 MM<br>MAHLE<br>size 2 | 80 | 4 | M31.01/02 |
| (1) | E 931 103 045 53 | piston<br>86,75 MM<br>MAHLE<br>size 3 | 80 | 4 | M31.01/02 |
| (1) | 931 103 052 01 | piston<br>86,75 MM<br>MAHLE<br>size 1 | 81- | 4 | M31.03 |
| (1) | 931 103 052 11 | piston<br>86,75 MM<br>MAHLE<br>size 2 | 81- | 4 | M31.03 |
| (1) | E 931 103 052 21 | piston<br>86,75 MM<br>MAHLE<br>size 3 | 81- | 4 | M31.03 |
| (1) | E 931 103 062 01 | piston<br>86,75 MM<br>- KS -<br>size 1 | 81 | 4 | M31.50 |
| (1) | E 931 103 062 11 | piston<br>86,75 MM<br>- KS -<br>size 2 | 81 | 4 | M31.50 |
| (1) | E 931 103 062 21 | piston<br>86,75 MM<br>- KS -<br>size 3 | 81 | 4 | M31.50 |
| (1) | 931 103 045 61 | piston<br>87,00 MM<br>MAHLE<br>size 1 | 80 | 4 | M31.01/02 |
| (1) | 931 103 045 62 | piston<br>87,00 MM<br>MAHLE<br>size 2 | 80 | 4 | M31.01/02 |
| (1) | E 931 103 045 63 | piston<br>87,00 MM<br>MAHLE<br>size 3 | 80 | 4 | M31.01/02 |
| (1) | 931 103 055 01 | piston<br>87,00 MM<br>MAHLE<br>size 1 | 81- | 4 | M31.03 |
| (1) | 931 103 055 11 | piston<br>87,00 MM<br>MAHLE<br>size 2 | 81- | 4 | M31.03 |
| (1) | E 931 103 055 21 | piston<br>87,00 MM<br>MAHLE<br>size 3 | 81- | 4 | M31.03 |
| (1) | E 931 103 063 01 | piston<br>87,00 MM<br>- KS -<br>size 1 | 81 | 4 | M31.50 |

| Pos | Part Number | Name | Remarks | Qty | Model |
|---|---|---|---|---|---|
| (1) | E 931 103 063 11 | piston<br>87,00 MM<br>- KS -<br>size 2 | 81 | 4 | M31.50 |
| (1) | E 931 103 063 21 | piston<br>87,00 MM<br>- KS -<br>size 3 | 81 | 4 | M31.50 |
| 2 | * 060 198 151 | set of piston rings<br>86,50 MM | | 4 | XJ XK VC |
| 2 | * 060 198 153 | set of piston rings<br>86,75 MM | | 4 | XJ XK VC |
| 2 | * 060 198 155 | set of piston rings<br>87,00 MM | | 4 | XJ XK VC |
| 2 | * 931 103 901 00 | set of piston rings<br>86,50 MM | 80 | 4 | M31.01/02 |
| 2 | E 931 103 901 01 | set of piston rings<br>86,50 MM | 81- | 4 | M31.03/04/50 |
| 2 | * 931 103 901 25 | set of piston rings<br>86,75 MM | 80 | 4 | M31.01/02 |
| 2 | * 931 103 901 26 | set of piston rings<br>86,75 MM | 81- | 4 | M31.03/04/50 |
| 2 | * 931 103 901 50 | set of piston rings<br>87,00 MM | 80 | 4 | M31.01/02 |
| 2 | E 931 103 901 51 | set of piston rings<br>87,00 MM | 81- | 4 | M31.03/04/50 |
| 2 | E 931 103 901 75 | set of piston rings<br>87,50 MM | 80 | 4 | M31.01/02 |
| 2 | * 931 103 901 76 | set of piston rings<br>87,50 MM | 81- | 4 | M31.03/04/50 |
| 3 | N 012 277 1 | snap ring | | 8 | |
| 4 | E 046 107 411 | piston pin | | 4 | XJ XK VC |
| 4 | E 931 103 407 00 | piston pin<br>MAHLE | | 4 | TURBO |
| 4 | E 931 103 407 01 | piston pin<br>- KS - | | 4 | GT |
| | | - -- E N D -- - | | | |

| Pos | Part Number | Name | Remarks | Qty | Model |
|---|---|---|---|---|---|

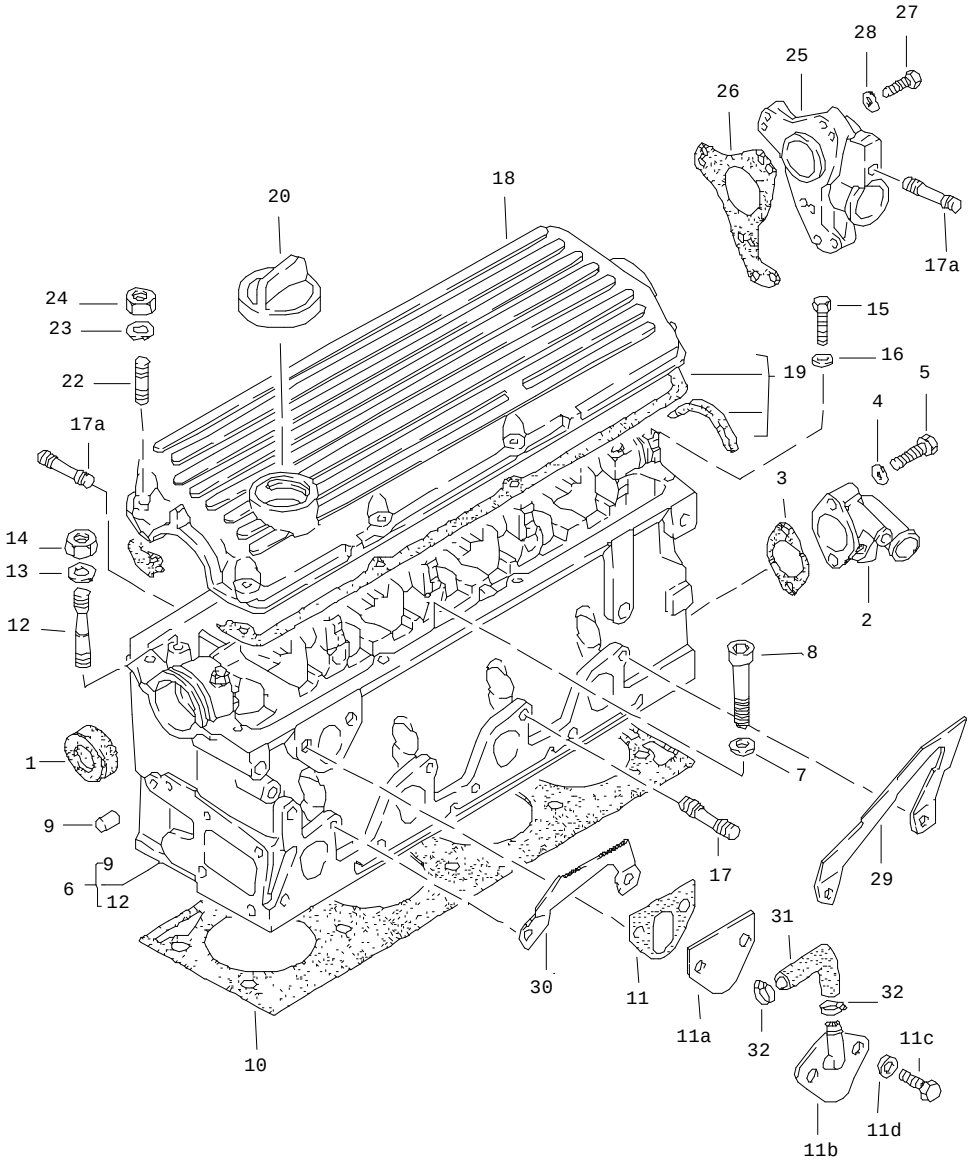


| Pos | Part Number | Name | Remarks | Qty | Model |
|---|---|---|---|---|---|
| | | cylinder head | | | |
| 1 | * 068 103 085 A | sealing ring | | 1 | |
| 2 | 047 103 093 B | flange | | 1 | |
| 3 | 052 121 091 A | gasket | | 1 | |
| 4 | N 012 226 5 | spring washer<br>A 6 | | 2 | |
| 5 | N 010 221 3 | hexagon-head bolt<br>M 6 X 35 | | 2 | |
| (5) | 900 074 151 02 | hexagon-head bolt<br>M 6 X 38 | | 1 | TURBO/GT |
| 6 | > 047 103 353 C | cylinder head | | 1 | XJ XK VC |
| (6) | 931 104 901 03 | cylinder head<br>for<br>MOD.80,81<br>use also:<br>047.103.113 A<br>059.127.311 A | | 1 | TURBO |
| (6) | 931 104 901 02 | cylinder head<br>use also:<br>047.103.113.A<br>059.127.311.A | | 1 | GT |
| 7 | 059 103 377 A | washer | | 10 | TURBO/GT |
| 7 | 059 103 377 A | washer | | 10 | XJ XK VC |
| 8 | N 014 731 2 | pan-head screw<br>M 12 X 115 | | 10 | TURBO/GT |
| (8) | 068 103 384 A | pan-head screw<br>M 12 X 115 | | 10 | XJ XK VC |
| 9 | 056 103 379 | plug | | 1 | |
| 10 | * 931 104 337 06 | cylinder head gasket | | 1 | XJ XK VC |
| (10) | * 931 104 337 06 | cylinder head gasket | | 1 | TURBO/GT |
| 11 | * 059 127 311 A | gasket | | 1 | |
| 11A | 047 103 113 A | cover | | 1 | |
| 11B | 931 104 041 00 | adapter | 82- | 1 | M31.03/04 |

| Pos | Part Number | Name | Remarks | Qty | Model |
|---|---|---|---|---|---|
| 11C | 900 067 057 02 | pan-head screw<br>M 8 X 20 | | 2 | |
| 11D | N 011 525 13 | washer<br>A 8,4 | | 2 | |
| 12 | 056 103 397 | stud<br>M 8 X 56 | | 10 | |
| 13 | 900 031 001 02 | washer<br>8,4 | | 10 | |
| 14 | N 011 008 8 | hexagon nut<br>M 8 | | 10 | |
| 15 | N 010 221 3 | hexagon-head bolt<br>M 6 X 35 | | 2 | |
| 16 | N 012 226 5 | spring washer<br>B 6 | | 2 | |
| 17 | N 044 411 5 | stud<br>M 8 X 30 | | 4 | XJ XK VC |
| (17) | 999 062 010 02 | stud<br>M 8 X 35 | | 2 | TURBO/GT |
| (17) | 999 062 044 02 | stud<br>M 8 X 30 | | 2 | TURBO/GT |
| 17A | N 044 411 5 | stud<br>M 8 X 30 | | 8 | XJ XK VC |
| (17A) | 999 062 238 02 | stud<br>M 8 X 25 | | 8 | TURBO/GT |
| 18 | 047 103 475 | cylinder head cover | | 1 | |
| 19 | 060 198 025 A | set of seals | | 1 | |
| 20 | 026 103 485 A | cover | | 1 | |
| 22 | N 044 462 2 | stud<br>M 6 X 25 | | 8 | |
| 23 | N 012 226 5 | spring washer<br>B 6 | | 8 | |
| 24 | 900 076 010 02 | hexagon nut<br>M 6 | | 8 | |
| 25 | E 048 905 215 A | housing<br>for<br>distributor<br>driving mechanism | | 1 | |
| 26 | * 048 905 341 B | gasket | | 1 | |
| 27 | N 010 218 6 | hexagon-head bolt<br>6 X 25 | | 3 | |
| (27) | N 010 220 3 | hexagon-head bolt<br>M 6 X 30 | | 1 | TURBO/GT |
| 28 | N 012 226 5 | spring washer<br>A 6 | | 3 | |
| 29 | 046 103 392 | engine lifting bracket | | 1 | |
| 30 | 046 103 391 | engine lifting bracket | | 1 | |
| 31 | 931 110 181 00 | hose | 82- | 1 | M31.03/04 |
| 32 | 999 512 346 00 | hose clamp<br>LC 16 - 25 | 82- | 2 | M31.03/04 |

- -- E N D -- -

| Model | Year | MG | SG | Illustration | Restrictions | Update | | | | |
|---|---|---|---|---|---|---|---|---|---|---|
| 924 | 85 | 1 | 03 | 103-05 | | 179 | 9:53 | 16.08.2004 | PORSCHE | PET | PORSCHE |

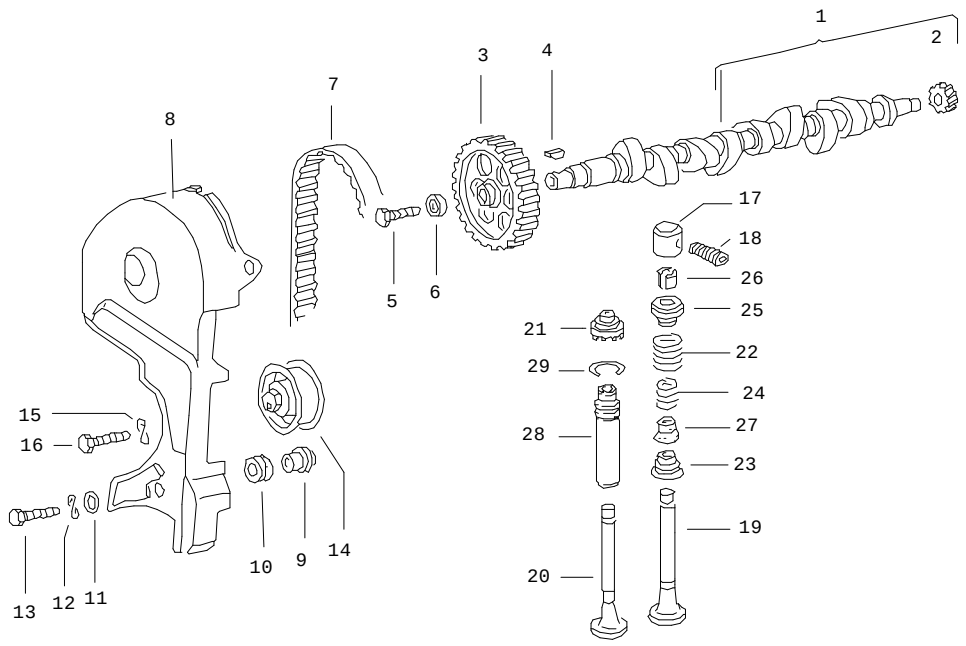


| Pos | Part Number | Name | Remarks | Qty | Model |
|---|---|---|---|---|---|
| | | camshaft<br>valves | | | |
| 1 | 046 109 021 | camshaft | | 1 | 924/TURBO |
| 1 | 931 105 021 01 | camshaft | | 1 | GT |
| 2 | 048 109 109 | drive wheel<br>f.ignition distributor | | 1 | |
| 3 | 049 109 111 C | gear wheel | | 1 | |
| 4 | N 012 708 2 | woodruff key | | 1 | |
| 5 | N 010 137 1 | hexagon-head bolt<br>M 12 X 1,5 X 35 | | 1 | |
| 6 | 056 109 143 | washer | | 1 | |
| 7 | 056 109 119 A | toothed belt | | 1 | |
| 8 | E 048 109 123 | cover for toothed belt | /LL | 1 | XK VC |
| 8 | 047 109 121 | cover for toothed belt | /RL | 1 | XJ |
| 8 | 931 105 051 00 | cover for toothed belt | | 1 | TURBO/GT |
| 9 | 056 109 135 | bearing sleeve | | 3 | |
| 10 | 056 129 669 B | grommet | | 3 | |
| 11 | N 011 612 3 | washer<br>R 7 | | 3 | |
| 12 | N 012 226 5 | spring washer<br>A 6 | | 3 | |
| 13 | N 010 218 6 | hexagon-head bolt<br>M 6 X 25 | | 3 | |
| 14 | 056 109 243 D | tensioning roller | | 1 | |
| 15 | 900 028 005 02 | spring washer<br>A 10 | | 1 | |
| 16 | N 010 455 3 | screw<br>M 10 X 55 | | 1 | |
| 17 | 046 109 311 | cam follower | | 8 | 924/TURBO |
| 17 | 931 105 121 00 | cam follower | 81 | 8 | GT |
| 18 | 046 109 453 C | adjusting screw | | 8 | |

| Pos | Part Number | Name | Remarks | Qty | Model |
|---|---|---|---|---|---|
| 18 | 046 109 453 D | adjusting screw<br>1 noctch | | X | |
| 18 | 046 109 453 E | adjusting screw<br>2 notches | | X | |
| 18 | 046 109 453 F | adjusting screw<br>3 notches | | X | |
| 18 | 046 109 453 G | adjusting screw<br>4 notches | | X | |
| 19 | 046 109 601 A | intake valve | | 4 | XJ XK VC |
| 19 | 931 105 401 02 | intake valve | | 4 | TURBO/GT |
| 20 | 046 109 611 A | exhaust valve | | 4 | XJ XK VC |
| 20 | 931 105 406 02 | exhaust valve | | 4 | TURBO/GT |
| 21 | 046 109 617 | roto cap<br>clockwise rotation | | 4 | XJ XK VC |
| 21 | 046 109 617 | roto cap<br>clockwise rotation | | 8 | TURBO/GT |
| 22 | E 046 109 623 | valve spring<br>outer | | 8 | |
| 23 | 046 109 629 | concave washer<br>lower<br>intake valve | | 4 | XJ XK VC |
| 24 | 046 109 633 | valve spring<br>inner | | 8 | |
| 25 | 059 109 641 A | concave washer<br>upper | | 8 | |
| 26 | 059 109 651 | collet | | 16 | |
| 27 | * 046 109 675 A | valve stem seal | | 8 | |
| 28 | 046 103 415 A | valve guide<br>exhaust<br>standard dimension<br>14,04 MM<br>without groove | | 4 | XJ XK VC |
| 28 | 046 103 419 A | valve guide<br>exhaust<br>1st oversize<br>14,24 MM<br>one groove | | 4 | XJ XK VC |
| 28 | 931 104 324 04 | valve guide<br>exhaust<br>1st oversize<br>14,08 MM<br>one groove | | 4 | TURBO/GT |
| 28 | 046 103 423 A | valve guide<br>exhaust<br>2nd oversize<br>14,44 MM<br>two grooves | | 4 | XJ XK VC |
| 28 | 931 104 324 05 | valve guide<br>exhaust<br>2nd oversize<br>14,11 MM<br>two grooves | | 4 | TURBO/GT |
| 28 | 048 103 415 A | valve guide<br>intake<br>standard dimension<br>14,04 MM<br>without groove | | 4 | XJ XK VC |
| 28 | 048 103 419 A | valve guide<br>intake<br>1st oversize<br>14,22 MM<br>one groove | | 4 | XJ XK VC |
| 28 | 931 104 323 04 | valve guide<br>intake<br>1st oversize<br>14,08 MM<br>one groove | | 4 | TURBO/GT |
| 28 | 048 103 423 A | valve guide<br>intake<br>2nd oversize<br>14,44 MM<br>two grooves | | 4 | XJ XK VC |
| 28 | 931 104 323 05 | valve guide<br>intake<br>2nd oversize<br>14,11 MM<br>two grooves | | 4 | TURBO/GT |
| 29 | N 012 460 1 | snap ring | | 8 | |
| | | - -- E N D -- - | | | |

| Model | Year | MG | SG | Illustration | Restrictions | Update | 9:53 | 16.08.2004 | PORSCHE | PET | PORSCHE |
|---|---|---|---|---|---|---|---|---|---|---|---|
| 924 | 85 | 1 | 04 | 104-00 | | 179 | | | | | |

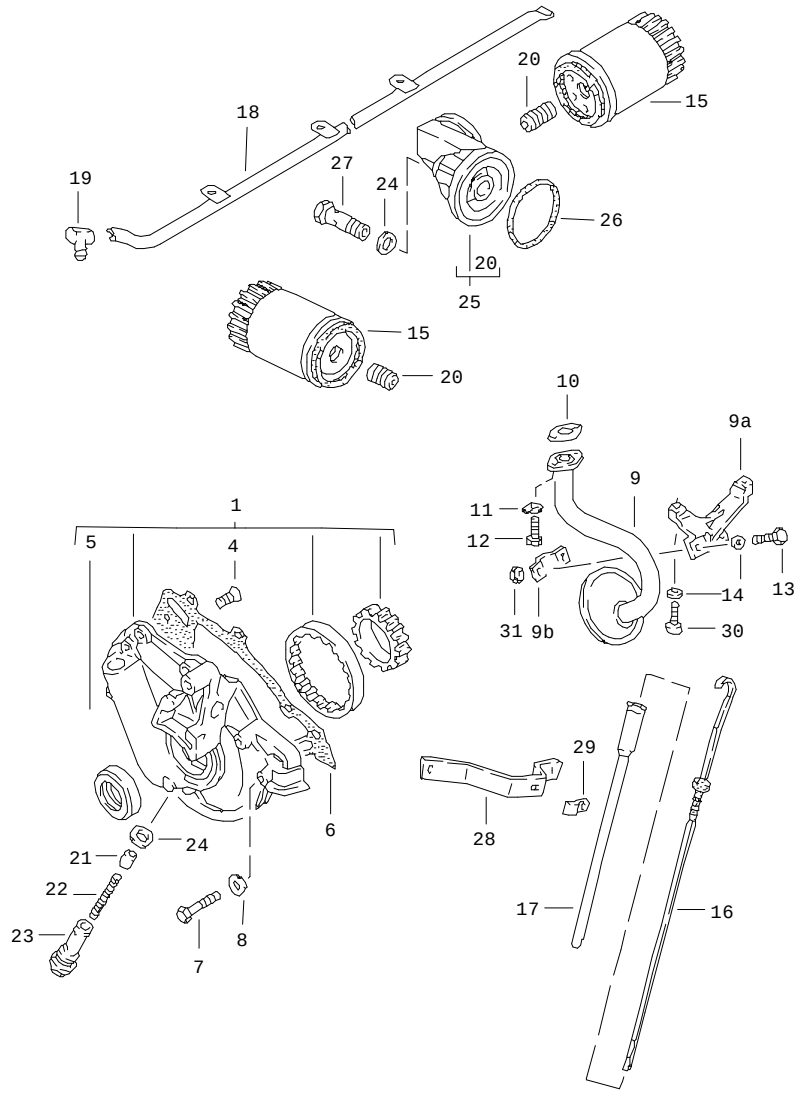


| Pos | Part Number | Name | Remarks | Qty | Model |
|---|---|---|---|---|---|
| | | engine lubrication | | | 924 |
| 1 | E 046 115 105 A | oil pump<br>ready for installation | | 1 | |
| 4 | E N 033 178 1 | countersunk-head screw<br>M 6 X 15 | | 6 | |
| 5 | E 048 115 147 | sealing ring<br>35 X 54 X 10 | | 1 | |
| 6 | * 046 115 189 A | gasket | | 1 | |
| 7 | N 010 339 3 | hexagon-head bolt<br>M 6 X 40 | | 5 | |
| 7 | N 010 347 3 | hexagon-head bolt<br>M 6 X 35 | | 1 | |
| 8 | 900 031 011 02 | washer<br>6,4 | | 6 | |
| 9 | 047 115 251 B | intake pipe | | 1 | |
| 9A | 047 115 267 C | retaining bracket | | 1 | |
| 9B | 047 115 285 | clip | | 1 | |
| 10 | * 048 115 257 | gasket | | 1 | |
| 11 | 048 115 259 | tab washer | | 1 | |
| 12 | N 900 572 01 | hexagon socket head bolt<br>M 6 X 15 | | 2 | |
| 13 | N 010 210 7 | hexagon-head bolt<br>M 6 X 10 | | 1 | |
| 14 | N 012 226 5 | spring washer<br>A 6 | | 1 | |
| 15 | 931 107 701 00 | oil filter | | 1 | |
| 16 | 047 115 611 A | oil level dipstick | | 1 | |
| 17 | E 047 103 635 | guide tube | | 1 | |
| 18 | 047 115 701 | oil splash tube | | 1 | |
| 19 | E 052 115 707 | adapter | | 1 | |
| 20 | 059 115 721 | union | | 1 | |
| 21 | 056 115 411 A | piston | | 1 | |

| Pos | Part Number | Name | Remarks | Qty | Model |
|---|---|---|---|---|---|
| 22 | 068 115 421 | spring | | 1 | |
| 23 | 046 115 419 | housing<br>relief valve | | 1 | |
| 24 | N 043 815 2 | sealing ring<br>A 20 X 24 | | 2 | |
| 25 | 046 115 573 A | bracket<br>for<br>oil filter | /RL | 1 | |
| 26 | 046 115 581 | o-ring<br>62 X 3 | /RL | 1 | |
| 27 | E 046 115 579 A | banjo bolt | /RL | 1 | |
| 28 | E 047 115 641 | support | | 1 | |
| 29 | 047 115 645 | clip | | 1 | |
| 30 | 900 067 011 02 | pan-head screw<br>M 6 X 20 | | 2 | |
| 31 | 900 076 010 02 | hexagon nut<br>M 6 | | 2 | |
| | | - -- E N D -- - | | | |

| Pos | Part Number | Name | Remarks | Qty | Model |
|---|---|---|---|---|---|

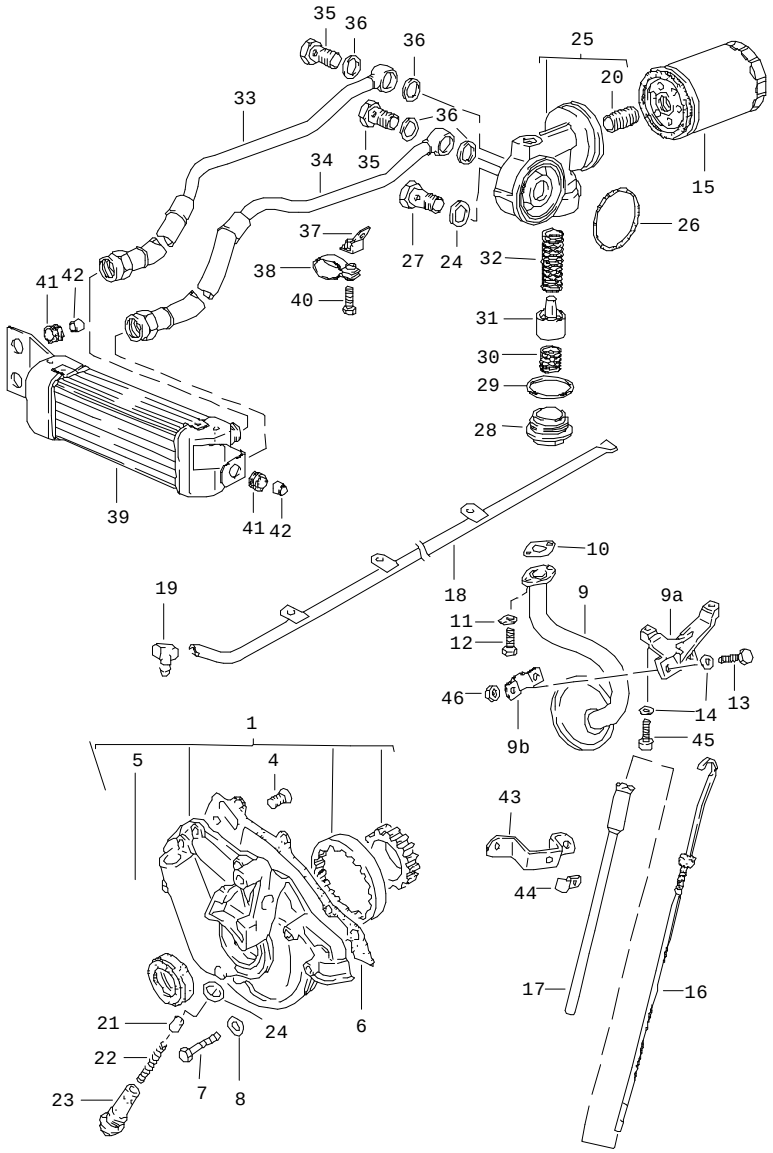


| Pos | Part Number | Name | Remarks | Qty | Model |
|---|---|---|---|---|---|
| | | engine lubrication<br>engine oil cooler | | | TURBO/GT |
| 1 | E 046 115 105 A | oil pump<br>ready for installation | | 1 | |
| 4 | E N 033 178 1 | countersunk-head screw<br>M 6 X 15 | | 6 | |
| 5 | E 048 115 147 | sealing ring<br>35 X 54 X 10 | | 1 | |
| 6 | * 046 115 189 A | gasket | | 1 | |
| 7 | N 010 339 3 | hexagon-head bolt<br>M 6 X 40 | | 5 | |
| 7 | N 010 347 3 | hexagon-head bolt<br>M 6 X 35 | | 1 | |
| 8 | 900 031 011 02 | washer<br>6,4 | | 6 | |
| 9 | 047 115 251 B | intake pipe | | 1 | |
| 9A | 047 115 267 C | retaining bracket | | 1 | |
| 9B | 047 115 285 | clip | | 1 | |
| 10 | * 048 115 257 | gasket | | 1 | |
| 11 | 048 115 259 | tab washer | | 1 | |
| 12 | N 900 572 01 | hexagon socket head bolt<br>M 6 X 15 | | 2 | |
| 13 | N 010 210 7 | hexagon-head bolt<br>M 6 X 10 | | 1 | |
| 14 | N 012 226 5 | spring washer<br>A 6 | | 1 | |
| 15 | 931 107 701 00 | oil filter | | 1 | |
| 16 | 047 115 611 A | oil level dipstick | | 1 | |
| 17 | E 047 103 635 | guide tube | | 1 | |
| 18 | 047 115 701 | oil splash tube | | 1 | |
| 19 | E 052 115 707 | adapter | | 1 | |
| 20 | 059 115 721 | union | | 1 | |

| Pos | Part Number | Name | Remarks | Qty | Model |
|---|---|---|---|---|---|
| 21 | 056 115 411 A | piston | | 1 | |
| 22 | 068 115 421 | spring | | 1 | |
| 23 | 046 115 419 | housing<br>relief valve | | 1 | |
| 24 | N 043 815 2 | sealing ring<br>A 20 X 24 | | 2 | |
| 25 | 931 107 151 00 | bracket<br>for<br>oil filter | | 1 | |
| 26 | 999 701 621 40 | o-ring<br>63,09 X 3,53 | | 1 | |
| 27 | E 046 115 579 A | banjo bolt | | 1 | |
| 28 | 931 107 152 00 | screw plug | | 1 | |
| 29 | 900 123 098 70 | sealing ring<br>A 42 X 49 | | 1 | |
| 30 | 928 107 173 00 | spring | | 1 | |
| 31 | 928 107 172 02 | regulator insert | | 1 | |
| 32 | 928 107 171 01 | spring | | 1 | |
| 33 | 931 107 127 11 | oil pipe<br>oil cooler<br>engine | | 1 | TURBO |
| 33 | 931 107 127 12 | oil pipe<br>oil cooler<br>engine | 81 | 1 | GT |
| 34 | 931 107 129 11 | oil pipe<br>oil cooler<br>engine | | 1 | TURBO |
| 34 | 931 107 129 12 | oil pipe<br>oil cooler<br>engine | 81 | 1 | GT |
| 35 | 999 134 023 02 | banjo bolt | | 2 | |
| 36 | 900 123 106 30 | sealing ring<br>A 18 X 24 | | 4 | |
| 37 | 931 107 125 01 | retaining bracket | | 1 | |
| 38 | 999 511 066 02 | clamp | | 2 | |
| 39 | 931 207 051 01 | engine oil cooler | | 1 | TURBO |
| 39 | E 931 207 051 04 | engine oil cooler | 81 | 1 | GT |
| 40 | 900 378 030 09 | hexagon-head bolt<br>M 6 X 20 | | 1 | |
| 41 | 056 129 669 B | grommet | | 3 | |
| 42 | 052 109 135 | spacer sleeve | | 3 | |
| 43 | E 931 107 154 00 | support | | 1 | |
| 44 | 047 115 645 | clip | | 1 | |
| 45 | 900 067 011 02 | pan-head screw<br>M 6 X 20 | | 2 | |
| 46 | 900 076 010 02 | hexagon nut<br>M 6 | | 2 | |

- -- E N D -- -

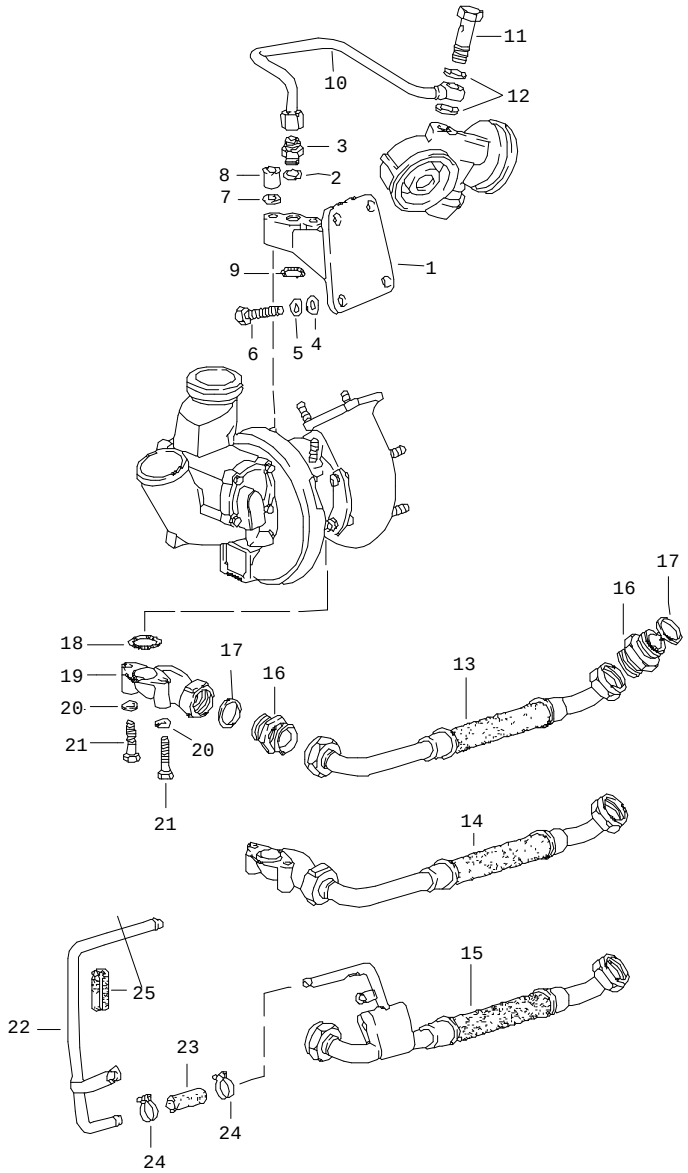


| Pos | Part Number | Name | Remarks | Qty | Model |
|---|---|---|---|---|---|
| | | engine lubrication turbocharger | | | TURBO/GT |
| 1 | 931 123 124 03 | bracket | | 1 | |
| 2 | 900 123 008 30 | sealing ring A 14 X 20 | | 1 | |
| 3 | N 020 702 1 | screw socket | | 1 | |
| 4 | 900 025 007 02 | washer 8,4 | | 4 | |
| 5 | N 012 241 8 | spring washer B 8 | | 4 | |
| 6 | 900 075 083 02 | hexagon-head bolt M 8 X 25 | | 4 | |
| 7 | 900 031 001 02 | washer 8,4 | | 2 | |
| 8 | 999 085 001 02 | socket head nut | | 2 | |
| 9 | 999 707 043 40 | o-ring 17 X 3 | | 1 | |
| 10 | 931 107 109 05 | oil pipe | | 1 | |
| 11 | N 021 074 1 | banjo bolt | | 1 | |
| 12 | 900 123 008 30 | sealing ring A 14 X 20 | | 2 | |
| 13 | 931 107 108 03 | oil pipe | /LL | 1 | M31.01/02 |
| 14 | 931 107 108 04 | oil pipe | /RL | 1 | M31.01 |
| 15 | 931 107 108 08 | oil pipe | /LL 81- | 1 | M31.03/04/50 |
| 15 | E 931 107 108 09 | oil pipe | /RL 81- | 1 | M31.03/50 |
| 16 | 900 915 008 02 | connection piece | | 2 | |
| 17 | 900 123 084 30 | sealing ring A 26 X 31 | | 2 | |
| 18 | 900 174 045 40 | sealing ring 25 X 3,15 | | 1 | |
| 19 | 931 107 111 02 | bracket | /LL | 1 | |
| 20 | N 012 241 8 | spring washer B 8 | | 2 | |

| Pos | Part Number | Name | Remarks | Qty | Model |
|---|---|---|---|---|---|
| 21 | 900 074 134 02 | hexagon-head bolt<br>M 8 X 45 | | 2 | |
| 22 | 931 107 219 01 | breather pipe | 82- | 1 | M31.03/04 |
| - | N 020 363 1 | hose<br>15 X 2,5 | 82- | * | M31.03/04 |
| 23 | - | 40 MM | | 1 | |
| 24 | 999 512 346 00 | hose clamp<br>LC 16 - 25 | 82- | 2 | M31.03/04 |
| 25 | 477 209 303 | hose piece | 82- | 1 | M31.03/04 |
| | | - -- E N D -- - | | | |

| Pos | Part Number | Name | Remarks | Qty | Model |
|---|---|---|---|---|---|

| Model | Year | MG | SG | Illustration | Restrictions | Update | 9:54 | 16.08.2004 | PORSCHE | PET | PORSCHE |
|---|---|---|---|---|---|---|---|---|---|---|---|
| 924 | 85 | 1 | 05 | 105-00 | | 179 | | | | | |

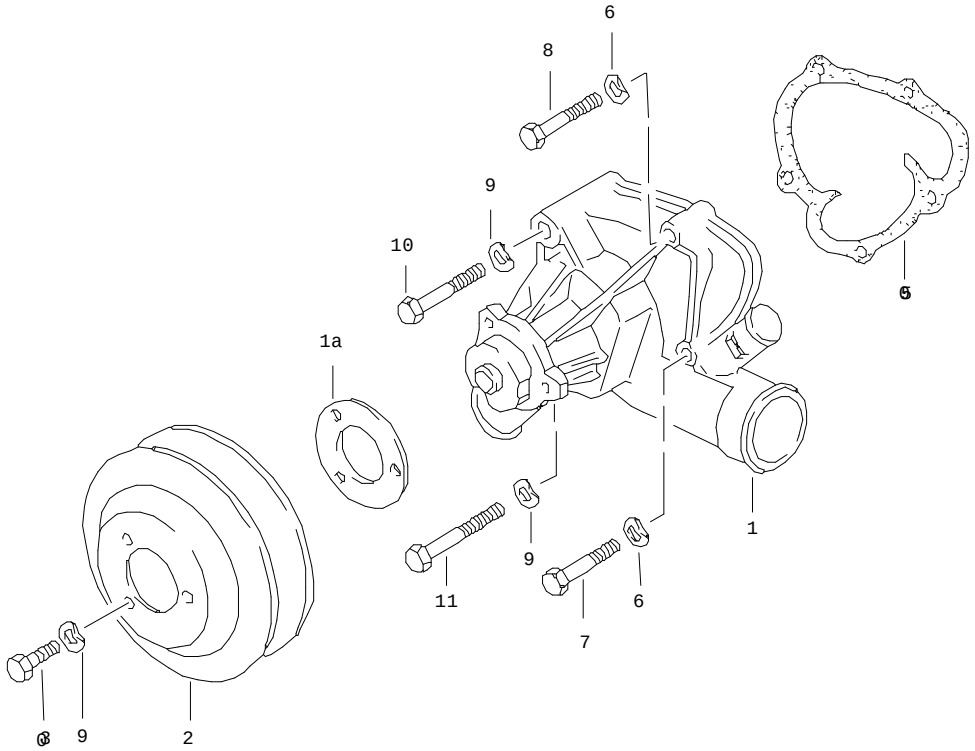


| Pos | Part Number | Name | Remarks | Qty | Model |
|---|---|---|---|---|---|
| | | water pump | | | |
| 1 | E 060 121 011 | water pump | | 1 | |
| 1A | 046 121 185 | spacer | | 1 | |
| 2 | 059 121 031 | v-belt pulley | | 1 | |
| 3 | N 010 237 6 | hexagon-head bolt<br>M 8 X 12 | /LL | 3 | 924 |
| 3 | 900 075 087 02 | hexagon-head bolt<br>M 8 X 16 | | 3 | |
| 5 | * 046 121 041 A | gasket | | 1 | |
| 6 | N 012 226 5 | spring washer<br>A 6 | | 3 | |
| 7 | N 010 348 4 | hexagon-head bolt<br>M 6 X 45 | | 2 | |
| 8 | N 010 221 3 | hexagon-head bolt<br>M 6 X 35 | | 1 | |
| 9 | N 012 229 3 | spring washer<br>A 8 | | 5 | |
| 10 | N 010 361 4 | hexagon-head bolt<br>M 8 X 65 | | 1 | |
| 11 | N 010 373 2 | hexagon-head bolt<br>M 8 X 72 | | 1 | |
| | | - -- E N D -- - | | | |

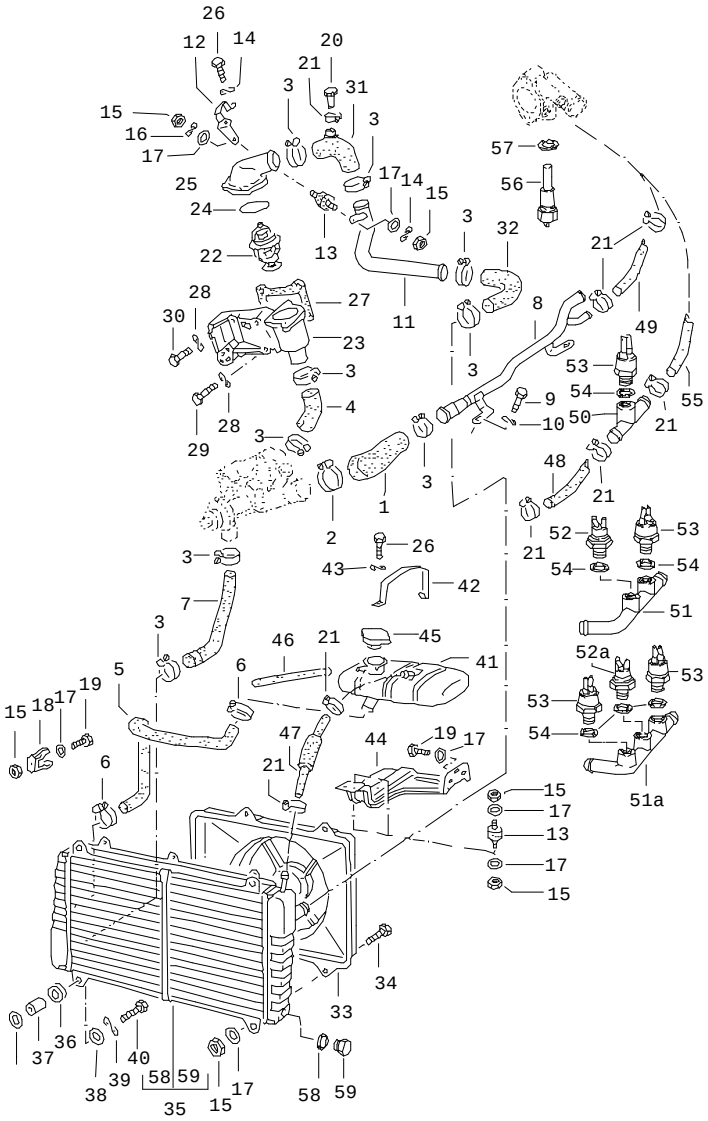


| Pos | Part Number | Name | Remarks | Qty | Model |
|---|---|---|---|---|---|
| | | water cooled | | | 924 |
| 1 | 046 121 051 | water hose | | 1 | |
| 2 | 999 512 348 02 | hose clamp<br>40 - 60 | | 1 | |
| 3 | N 024 516 3 | hose clamp<br>30 - 45 | | 9 | |
| 4 | 046 121 053 | water hose | | 1 | |
| 5 | 047 121 060 | water hose | | 1 | |
| 6 | 999 512 252 02 | hose clamp<br>23 - 35 | | 2 | |
| 7 | 046 121 061 | water hose | | 1 | |
| 8 | 047 121 073 | water tube | | 1 | |
| 9 | 900 075 087 02 | hexagon-head bolt<br>M 8 X 16 | | 1 | |
| 10 | 900 027 015 02 | lock ring<br>B 8 | | 1 | |
| 11 | 047 121 073 B | water tube | | 1 | |
| 12 | 047 121 094 | support | | 1 | |
| 13 | 999 703 239 00 | bonded rubber buffer | | 3 | |
| 14 | N 012 226 5 | spring washer<br>A 6 | | 3 | |
| 15 | 900 076 010 02 | hexagon nut<br>M 6 | | 11 | |
| 16 | N 012 226 5 | spring washer<br>B 6 | | 1 | |
| 17 | N 011 524 7 | washer<br>A 6,4 | | 14 | |
| 18 | E 046 121 095 A | hose clamp | | 2 | |
| 19 | N 010 215 13 | hexagon-head bolt<br>M 6 X 15 | | 5 | |
| 20 | 046 121 099 | plug | | 1 | |
| 21 | 999 512 554 00 | hose clamp<br>12 - 20 | | 5 | |

| Pos | Part Number | Name | Remarks | Qty | Model |
|---|---|---|---|---|---|
| 22 | E 059 121 113 B | thermostat<br>83 degree c | | 1 | |
| 22 | 059 121 113 A | thermostat<br>87 degree c | | 1 | |
| 23 | 048 121 117 | housing | | 1 | |
| 24 | * 038 121 119 B | sealing ring | | 1 | |
| 25 | 059 121 121 | cover | | 1 | |
| 26 | N 010 217 9 | hexagon-head bolt<br>M 6 X 20 | | 3 | |
| 27 | * 048 121 127 A | gasket | | 1 | |
| 28 | N 012 229 3 | spring washer<br>A 8 | | 4 | |
| 29 | N 010 335 5 | hexagon-head bolt<br>M 8 X 35 | | 2 | |
| 30 | 900 075 029 09 | hexagon-head bolt<br>M 8 X 25 | | 2 | |
| 31 | E 047 121 175 | hose elbow | | 1 | |
| 32 | 931 106 157 00 | hose elbow | | 1 | |
| 33 | 477 121 207 C | fan cowl | | 1 | |
| 33 | 477 121 207 E | fan cowl<br>with<br>air conditioner | | 1 | |
| 34 | N 010 210 7 | hexagon-head bolt<br>M 6 X 12 | | 4 | |
| 35 | 477 121 251 A | radiator | | 1 | |
| 36 | 056 129 669 B | grommet | | 4 | |
| 37 | 052 109 135 | spacer sleeve | | 4 | |
| 38 | N 011 612 3 | washer<br>R 7 | | 8 | |
| 39 | N 012 226 5 | spring washer<br>B 6 | | 4 | |
| 40 | N 010 218 6 | hexagon-head bolt<br>M 6 X 25 | | 4 | |
| 41 | 028 121 405 A | expansion tank | | 1 | |
| 42 | 028 121 409 | restraining strap | | 1 | |
| 43 | E N 012 036 5 | lock ring | | 1 | |
| 44 | 477 121 413 B | bracket | | 1 | |
| 45 | 028 121 453 | cover | | 1 | |
| - | N 020 281 1 | hose | | * | |
| 46 | - | 7 X 2,5 MM | | 1 | |
| 47 | 477 121 105 | water hose | | 1 | |
| 48 | 810 819 371 D | water hose | | 1 | |
| 49 | 810 819 371 G | water hose | | 1 | |
| 50 | 056 121 167 | connecting piece | | 1 | |
| 53 | 047 131 851 D | temperature switch | 81- | 1 | |
| 54 | N 013 808 3 | sealing ring<br>A 10 X 16 | | 2 | |
| 55 | 047 121 621 A | water hose | | 1 | |
| 56 | 043 906 163 A | temperature time switch | | 1 | |
| 57 | 900 123 007 30 | sealing ring<br>A 14 X 18 | | 1 | |
| 58 | 900 123 050 20 | sealing ring<br>A 8 X 11,5 | | 1 | |
| 59 | N 016 158 1 | screw plug<br>AM 8 X 1 | | 1 | |

- -- E N D -- -

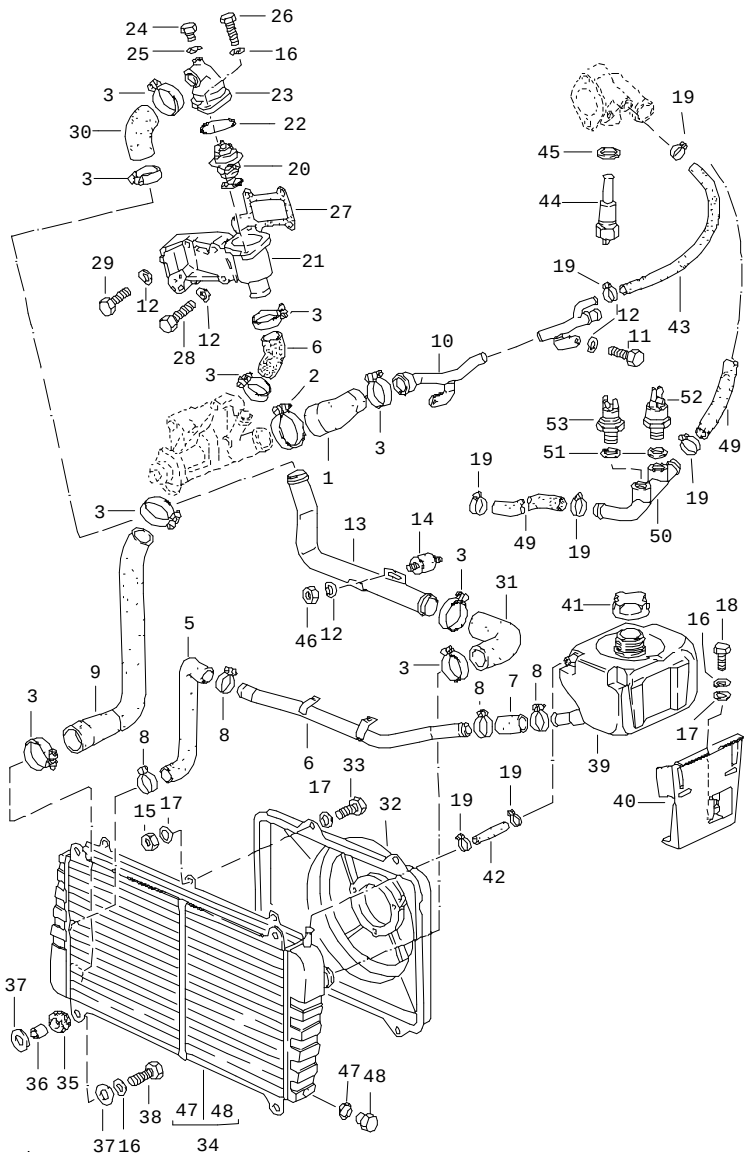


| Pos | Part Number | Name | Remarks | Qty | Model |
|---|---|---|---|---|---|
| | | water cooled | | | TURBO/GT |
| 1 | 046 121 051 | water hose | | 1 | |
| 2 | 999 512 348 02 | hose clamp<br>40 - 60 | | 1 | |
| 3 | N 024 516 3 | hose clamp<br>30 - 45 | | 9 | |
| 4 | 046 121 053 | water hose | | 1 | |
| 5 | 931 106 267 01 | water hose | | 1 | |
| 6 | E 931 106 263 01 | water tube | | 1 | |
| - | 999 238 001 40 | water hose<br>20 X 27 | | * | |
| 7 | - | 150 MM | | 1 | |
| 8 | 999 512 252 02 | hose clamp<br>23 - 35 | | 4 | |
| 9 | 046 121 061 | water hose | | 1 | |
| 10 | 931 106 052 00 | water tube | | 1 | |
| 11 | 900 075 087 02 | hexagon-head bolt<br>M 8 X 16 | | 2 | |
| 12 | 900 027 015 02 | lock ring<br>B 8 | | 6 | |
| 13 | 931 106 051 04 | water tube | -81 | 1 | |
| 13 | 931 106 051 04 | water tube | 82- | 1 | |
| 14 | 931 106 163 00 | rubber mounting | | 1 | |
| 15 | 900 076 010 02 | hexagon nut<br>M 6 | | 8 | |
| 16 | N 012 226 5 | spring washer<br>B 6 | | 8 | |
| 17 | N 011 524 7 | washer<br>A 6,4 | | 10 | |
| 18 | N 010 215 13 | hexagon-head bolt<br>M 6 X 15 | | 3 | |
| 19 | 999 512 554 00 | hose clamp<br>12 - 20 | | 4 | |

| Pos | Part Number | Name | Remarks | Qty | Model |
|---|---|---|---|---|---|
| 20 | 059 121 113 A | thermostat<br>87 degree c | | 1 | |
| 21 | 048 121 117 | housing | | 1 | |
| 22 | * 038 121 119 B | sealing ring | | 1 | |
| 23 | 931 106 155 00 | cover | | 1 | |
| 24 | 931 106 156 00 | screw plug | | 1 | |
| 25 | N 013 830 7 | sealing ring<br>A 8 X 12 | | 1 | |
| 26 | N 010 217 9 | hexagon-head bolt<br>M 6 X 20 | | 2 | |
| 27 | * 048 121 127 A | gasket | | 1 | |
| 28 | N 010 335 5 | hexagon-head bolt<br>M 8 X 35 | | 2 | |
| 29 | 900 075 029 09 | hexagon-head bolt<br>M 8 X 25 | | 2 | |
| 30 | E 931 106 159 00 | hose elbow | | 1 | |
| 31 | 931 106 157 00 | hose elbow | | 1 | |
| 32 | 477 121 207 C | fan cowl | | 1 | |
| 32 | 477 121 207 E | fan cowl<br>with<br>air conditioner | | 1 | |
| 33 | N 010 210 7 | hexagon-head bolt<br>M 6 X 12 | | 4 | |
| 34 | 477 121 251 A | radiator | | 1 | |
| 35 | 056 129 669 B | grommet | | 4 | |
| 36 | 052 109 135 | spacer sleeve | | 4 | |
| 37 | N 011 612 3 | washer<br>R 7 | | 8 | |
| 38 | N 010 218 6 | hexagon-head bolt<br>M 6 X 25 | | 4 | |
| 39 | 931 106 265 02 | expansion tank | | 1 | |
| 40 | E 477 809 853 | bracket | | 1 | |
| 41 | 171 121 321 B | cover | | 1 | |
| - | 000 043 205 14 | hose | | 1 | |
| 43 | 810 819 371 G | water hose | | 1 | |
| 44 | 928 605 101 00 | temperature time switch | | 1 | |
| 45 | 900 123 007 30 | sealing ring<br>A 14 X 18 | | 1 | |
| 46 | N 011 008 8 | hexagon nut<br>M 8 | | 1 | |
| 47 | 900 123 050 20 | sealing ring<br>A 8 X 11,5 | | 1 | |
| 48 | N 016 158 1 | screw plug<br>AM 8 X 1 | | 1 | |

- -- E N D -- -

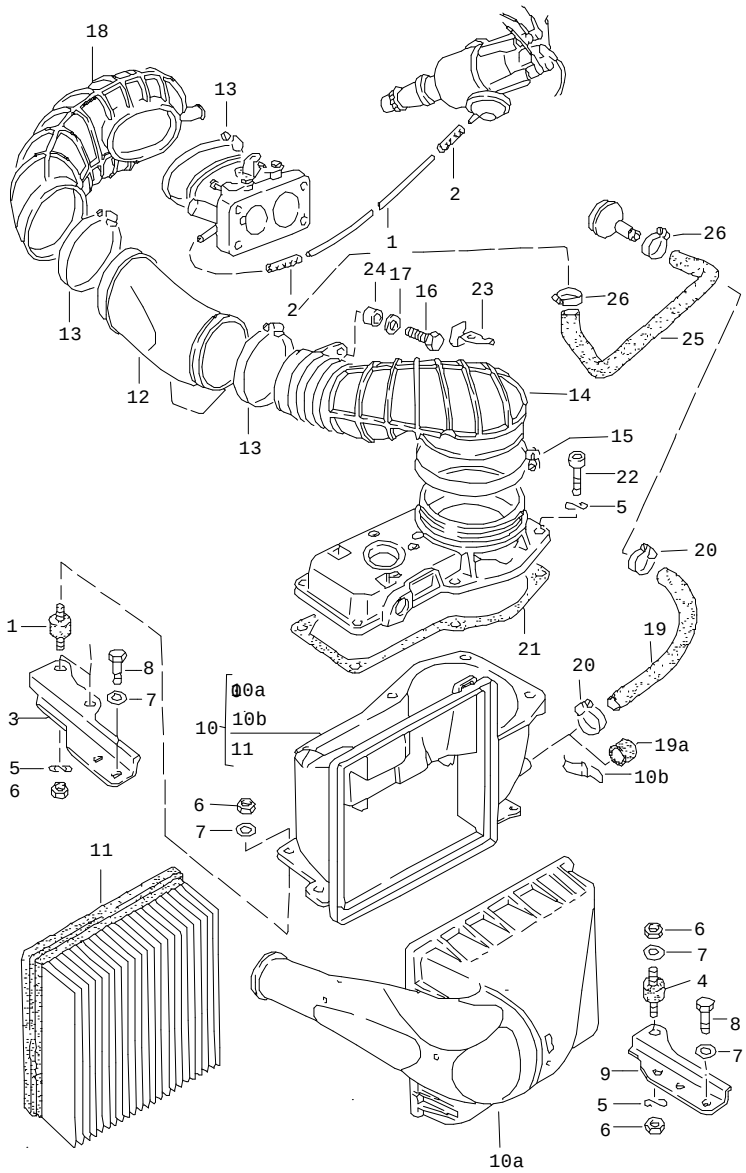


| Pos | Part Number | Name | Remarks | Qty | Model |
|---|---|---|---|---|---|
| | | air filter system | | | 924 |
| - | N 020 139 1 | hose<br>4 X 1 | | * | |
| 1 | - | 700 MM | | 1 | |
| - | N 020 353 5 | hose<br>3,5 X 2 | | * | |
| 2 | - | 40 MM | | 2 | |
| 3 | 047 129 545 B | bracket | | 1 | |
| 4 | 999 703 239 00 | bonded rubber buffer | | 3 | |
| 5 | N 012 226 5 | spring washer<br>B 6 | | 9 | |
| 6 | 900 076 010 02 | hexagon nut<br>M 6 | | 6 | |
| 7 | N 011 524 7 | washer<br>A 6,4 | | 6 | |
| 8 | N 010 215 13 | hexagon-head bolt<br>M 6 X 15 | | 4 | |
| 9 | 047 129 547 B | bracket | | 1 | |
| 10 | 477 129 611 D | air cleaner<br>ready for installation | | 1 | |
| 10A | 477 129 615 D | air cleaner cover<br>without<br>retaining clip | | 1 | |
| 10B | A 055 129 635 | retaining clip | | 4 | |
| 10B | 055 129 635 | retaining clip | | 4 | |
| 11 | 021 129 620 | air cleaner cartridge | | 1 | |
| 12 | 047 133 083 C | intake manifold | | 1 | |
| (12) | 047 133 083 E | intake manifold | 82- | 1 | |
| (12) | 047 133 083 F | intake manifold | | 1 | (S) |
| (12) | 047 133 083 D | intake manifold | 82- | 1 | (S)(CH) |
| (12) | 047 133 083 E | intake manifold | AUT. 82- | 1 | (S) |

| Pos | Part Number | Name | Remarks | Qty | Model |
|---|---|---|---|---|---|
| (12) | 047 133 083 D | intake manifold | | 1 | (USA) (CDN) (J) (AUS) |
| 13 | 999 512 350 02 | hose clamp<br>80 - 100 | | 3 | |
| 14 | 047 133 367 E | hose | | 1 | |
| 15 | N 024 521 1 | hose clamp<br>A 12 X 126 | | 1 | |
| 16 | 900 075 014 02 | hexagon-head bolt<br>M 6 X 18 | | 1 | |
| 17 | 900 151 029 02 | washer<br>B 6,4 | | 1 | |
| 18 | 047 133 367 C | hose | | 1 | |
| (18) | 047 133 367 B | hose | | 1 | (S) |
| - | 047 131 467 | screw socket | | 1 | (S) |
| - | N 011 565 3 | washer<br>15 | | 2 | (S) |
| - | 900 078 005 01 | hexagon nut<br>M 14 X 1,5 | | 1 | (S) |
| - | N 020 343 1 | hose<br>18 X 2,5 MM | | * | |
| 19A | 930 110 256 01 | cap | | 1 | |
| 20 | 999 512 346 00 | hose clamp<br>16 - 25 | | 2 | |
| 21 | 049 133 379 A | gasket | | 1 | |
| 22 | 900 067 009 02 | pan-head screw<br>M 6 X 15 | | 6 | |
| 23 | 477 133 523 | retainer spring | | 1 | |
| 24 | 047 133 091 | spacer sleeve | | 1 | |
| 25 | 047 103 221 | vent hose | | 1 | |
| 26 | 999 512 252 02 | hose clamp<br>23 - 35 | | 2 | |
| | | - -- E N D -- - | | | |

| Model | Year | MG | SG | Illustration | Restrictions | Update | 9:54 | 16.08.2004 | PORSCHE | PET | PORSCHE |
|---|---|---|---|---|---|---|---|---|---|---|---|
| 924 | 85 | 1 | 06 | 106-05 | | 179 | | | | | |

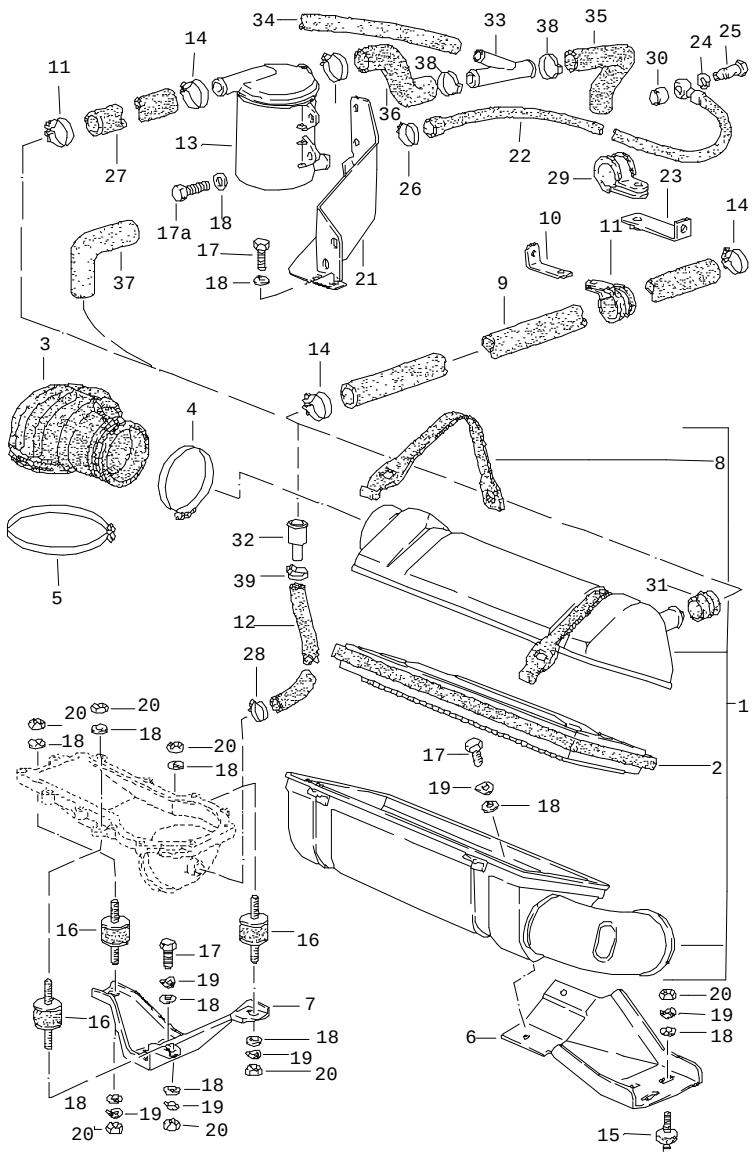


| Pos | Part Number | Name | Remarks | Qty | Model |
|---|---|---|---|---|---|
| | | air filter system | | | TURBO/GT |
| 1 | 931 110 021 03 | air cleaner<br>ready for installation | | 1 | |
| (1) | 931 110 021 05 | air cleaner<br>ready for installation | | 1 | (AUS) (USA)<br>(CDN) (J) |
| 2 | 931 110 121 00 | air cleaner cartridge | | 1 | |
| 3 | 931 110 358 00 | air box | | 1 | |
| 4 | N 024 326 1 | hose clamp | | 1 | |
| 5 | N 024 334 1 | hose clamp | | 1 | |
| 6 | 477 809 085 | support | | 1 | |
| 7 | 477 805 513 | support | | 1 | |
| 8 | A 928 110 363 01 | restraining strap | | 2 | |
| 8 | 928 110 363 01 | restraining strap | | 2 | |
| 9 | 931 107 394 02 | hose<br>22 X 30<br>650 MM | | 1 | M31.01/02 |
| 10 | 931 107 159 00 | support | | 1 | |
| 11 | 999 511 077 02 | clamp | | 1 | |
| - | 999 239 016 40 | hose<br>13 X 18 | 81 | * | |
| 12 | - | 550 MM<br>50 MM | <br>82- | 1<br>1 | |
| (12) | 931 107 397 00 | breather pipe | 82- | 1 | M31.03/04 |
| 13 | 931 107 221 01 | oil separator | | 1 | |
| 14 | 999 512 252 02 | hose clamp<br>LA 23 - 35 | | 2 | |
| 15 | 931 110 191 00 | bonded rubber buffer | | 3 | |
| 16 | 999 703 239 00 | bonded rubber buffer | | 3 | |
| 17 | 999 072 005 09 | hexagon-head bolt<br>M 6 X 12 | | 3 | |
| 17A | N 010 215 13 | hexagon-head bolt<br>M 6 X 15 | | 2 | |

| Pos | Part Number | Name | Remarks | Qty | Model |
|---|---|---|---|---|---|
| 18 | N 011 524 7 | washer<br>A 6,4 | | 10 | |
| 19 | N 012 226 5 | spring washer<br>B 6 | | 15 | |
| 20 | 900 076 010 02 | hexagon nut<br>M 6 | | 8 | |
| 21 | 931 107 227 00 | retaining bracket | | 1 | |
| 22 | 931 107 223 03 | return line | 81- | 1 | |
| 23 | 931 107 225 01 | retaining bracket | | 1 | |
| 24 | 900 123 007 30 | sealing ring<br>A 14 X 18 | | 2 | |
| 25 | 999 134 021 02 | banjo bolt | | 1 | |
| 26 | 999 512 252 02 | hose clamp<br>LC 23 - 35 | | 1 | |
| 27 | 931 107 394 02 | hose<br>22 X 30<br>650 MM | | 1 | |
| 28 | 999 512 554 00 | hose clamp<br>LA 12 - 20 | | 2 | (AUS) (USA)<br>(CDN) (J) |
| 29 | 999 511 080 02 | clamp | | 2 | |
| 30 | 931 107 229 00 | sleeve | | 1 | |
| 31 | 999 703 168 40 | cap | 81- | 1 | |
| (31) | 930 110 256 00 | cap | | 1 | (AUS)(USA) |
| 32 | 931 107 387 00 | reducing socket | 81- | 1 | |
| 33 | 931 107 385 00 | branch socket | 81 | 1 | |
| (33) | 931 107 389 00 | socket | 82- | 1 | |
| - | N 020 363 1 | hose<br>15 X 2,5<br>1200 MM | 81- | *<br><br>1 | |
| 35 | 931 107 169 00 | hose | 81- | 1 | |
| 36 | 931 107 171 00 | hose | 81- | 1 | |
| 37 | 931 107 173 00 | hose | 81- | 1 | |
| 38 | 999 512 336 02 | clamp<br>28 - 32 | 81- | 3 | |
| 39 | 999 512 335 02 | clamp<br>16 - 19 | 81- | 1 | |

- -- E N D -- -

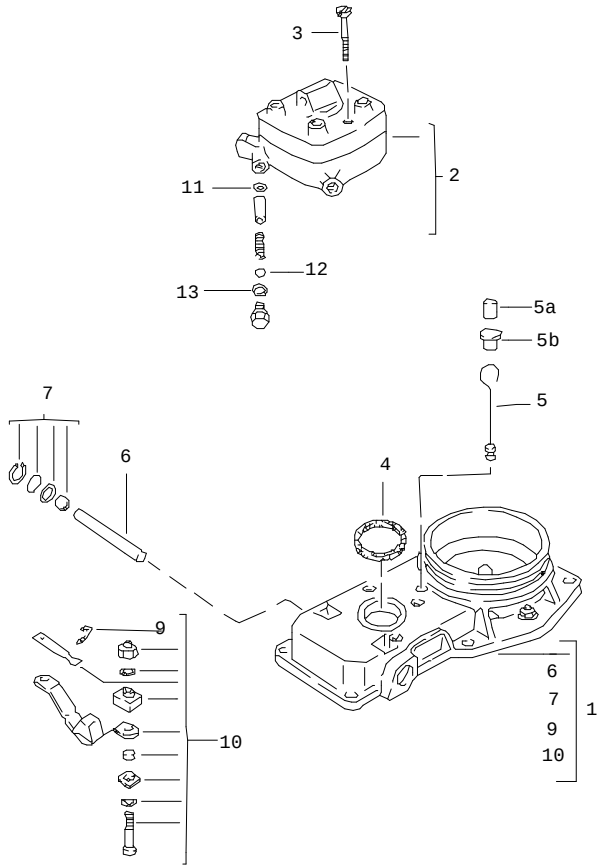


| Pos | Part Number | Name | Remarks | Qty | Model |
|---|---|---|---|---|---|
| | | k-jetronic<br>1<br>mixture control unit | | | 924 |
| 1 | 047 133 471 A | mass air flow | | 1 | |
| 2 | > 063 133 481 X | fuel distributor | | 1 | |
| 3 | 049 133 483 | pan-head screw | | 3 | |
| 4 | 049 133 485 A | sealing ring | | 1 | |
| 5A | 049 133 777 A | plug<br>blue | | 1 | |
| 6 | E 911 110 941 00 | straight pin | | 1 | |
| 7 | * 911 110 946 00 | parts kit<br>control lever | | 1 | |
| 9 | 911 110 921 00 | clamp | | 1 | |
| 10 | * 911 110 947 00 | parts kit<br>stop | | 1 | |
| 11 | 911 110 936 00 | sealing ring | | 1 | |
| 12 | 911 110 937 00 | shim<br>0,10 | | X | |
| (12) | 911 110 937 01 | shim<br>0,50 | | X | |
| 13 | 900 123 033 20 | sealing ring | | 1 | |
| | | - -- E N D -- - | | | |

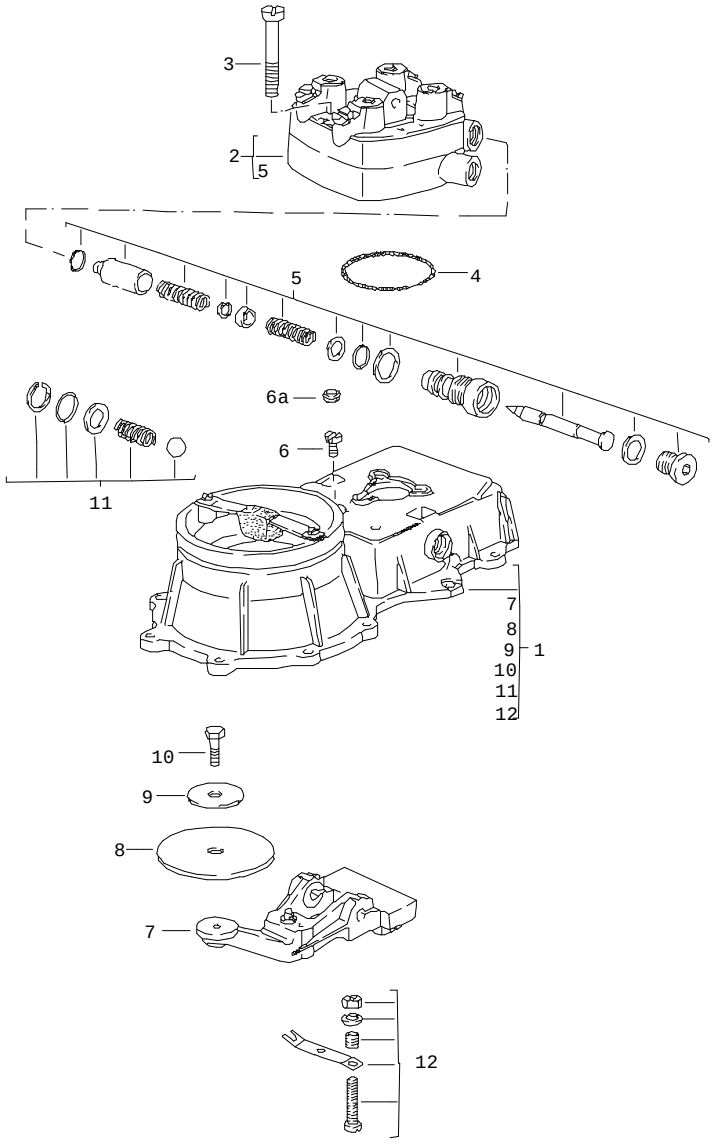


| Pos | Part Number | Name | Remarks | Qty | Model |
|---|---|---|---|---|---|
| | | k-jetronic<br>1<br>mixture control unit | | | TURBO/GT |
| 1 | 931 110 906 00 | mass air flow | 80 | 1 | M31.01 |
| 1 | E 931 110 906 02 | mass air flow | 81- | 1 | M31.03/50 |
| 2 | > 931 110 907 00 | fuel distributor | 80 | 1 | M31.01 |
| 2 | E 931 110 907 02 | fuel distributor | 81- | 1 | M31.03/50 |
| 3 | 900 146 045 02 | oval-head screw | | 3 | |
| 4 | 931 110 908 00 | sealing ring | | 1 | |
| 5 | * 928 110 920 01 | parts kit<br>pressure regulator | | 1 | |
| 6 | 931 110 910 00 | screw plug | | 1 | |
| 6A | 931 110 913 00 | plug<br>blue | | 1 | |
| 7 | 931 110 909 00 | control lever | | 1 | |
| 8 | 911 110 943 02 | air flow sensor plate | | 1 | |
| 9 | 911 110 960 00 | support washer | | 1 | |
| 10 | E 931 110 911 00 | hexagon-head bolt | | 1 | |
| 11 | * 911 110 946 00 | parts kit<br>control lever | | 1 | |
| 12 | * 931 110 912 00 | parts kit<br>stop | | 1 | |
| | | - -- E N D -- - | | | |

| Model | Year | MG | SG | Illustration | Restrictions | Update | | | | | |
|---|---|---|---|---|---|---|---|---|---|---|---|
| 924 | 85 | 1 | 07 | 107-10 | | 179 | 9:55 | 16.08.2004 | PORSCHE | PET | PORSCHE |

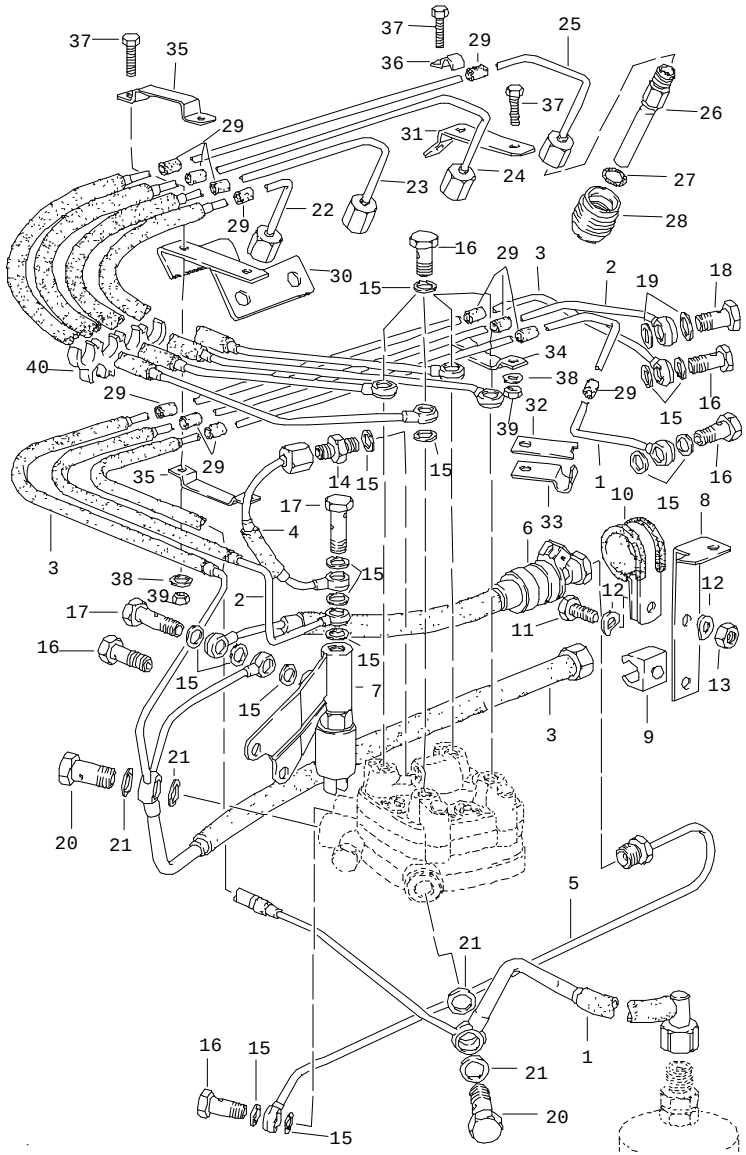


| Pos | Part Number | Name | Remarks | Qty | Model |
|---|---|---|---|---|---|
| | | k-jetronic<br>2<br><br>until<br>F >>92A04 13233<br><br>were<br>the following<br>differing parts<br>installed<br>see catalogue<br>924 - 79<br>group<br>1/07/10 | | | 924 |
| (1) | 047 133 627 | fuel supply line | | 1 | |
| (2) | 047 133 655 B | fuel control line | | 1 | |
| (3) | 047 133 625 C | fuel return line | | 1 | |
| (22) | 047 133 315 | injection line<br>cylinder 1 | | 1 | |
| (23) | 047 133 315 | injection line<br>cylinder 2 | | 1 | |
| (24) | 047 133 319 | injection line<br>cyl. 3 | | 1 | |
| (25) | 047 133 321 | injection line<br>cyl. 4 | | 1 | |
| (26) | 047 133 551 | injector valve | | 4 | |
| (30) E | 047 133 192 | support | | 1 | |
| (31) | 047 133 191 C | support | | 1 | |
| (40) | 047 133 191 D | support<br><br>from<br>F 92A04 13234>><br><br>see group<br>1/07/11<br>and<br>information on quality<br>group<br>2<br>of<br>07.06.85 | | 1 | |
| 1 | 047 133 627 B | fuel line | | 1 | |

| Model | Year | MG | SG | Illustration | Restrictions | Update | | | | |
|---|---|---|---|---|---|---|---|---|---|---|
| 924 | 85 | 1 | 07 | 107-10 | | 179 | 9:55 | 16.08.2004 | PORSCHE | PET | PORSCHE |

| Pos | Part Number | Name | Remarks | Qty | Model |
|---|---|---|---|---|---|
| 2 | 047 133 655 C | fuel line | | 1 | |
| 3 | 047 133 625 E | fuel line | | 1 | |
| 4 | 047 133 627 C | fuel line | | 1 | |
| 7 | 477 133 525 D | solenoid valve<br>with<br>support | | 1 | |
| 8 | 477 133 827 | support | | 1 | |
| 9 | 999 507 255 40 | cable holder | | 1 | |
| 14 | 063 133 541 | screw socket | | 1 | |
| 15 | 900 123 050 20 | sealing ring<br>A 8 X 11,5 | | 19 | |
| 16 | 911 110 899 00 | banjo bolt | | 7 | |
| 17 | N 900 887 01 | banjo bolt | | 2 | |
| 18 | 900 175 002 02 | screw | | 1 | |
| 19 | N 013 806 2 | sealing ring<br>A 10 X 14 | | 2 | |
| 20 | N 021 071 2 | banjo bolt | | 2 | |
| 21 | N 013 812 3 | sealing ring<br>A 12 X 15,6 | | 4 | |
| 22 | 047 133 315 B | injection line<br>cylinder 1 | | 1 | |
| 23 | 047 133 317 B | injection line<br>cylinder 2 | | 1 | |
| 24 | 047 133 319 B | injection line<br>cyl. 3 | | 1 | |
| 25 | 047 133 321 B | injection line<br>cyl. 4 | | 1 | |
| 26 | 049 133 551 | injector valve | | 4 | |
| 27 | 034 133 557 E | o-ring | | 4 | |
| 28 | 063 133 555 | socket | | 4 | |
| 29 | E 047 133 265 | rubber | | 12 | |
| 30 | 047 133 885 | support | | 1 | |
| 31 | 047 133 887 | support | | 1 | |
| 32 | 047 133 671 | clip | | 1 | |
| 33 | 047 133 671 A | clip | | 1 | |
| 34 | N 028 452 1 | clip | | 1 | |
| 35 | N 028 454 1 | clip | | 2 | |
| 36 | N 028 610 1 | clip | | 1 | |
| 37 | 900 075 092 02 | hexagon-head bolt<br>M 4 X 10 | | 4 | |
| 38 | 900 031 009 02 | washer<br>4,3 | | 4 | |
| 39 | N 011 004 6 | hexagon nut<br>M 4 | | 4 | |
| 40 | 047 133 193 G | holder | | 1 | |
| | | - -- E N D -- - | | | |

| Model | Year | MG | SG | Illustration | Restrictions | Update | | | | |
|---|---|---|---|---|---|---|---|---|---|---|
| 924 | 85 | 1 | 07 | 107-11 | | 179 | 9:55 | 16.08.2004 | PORSCHE | PET | PORSCHE |

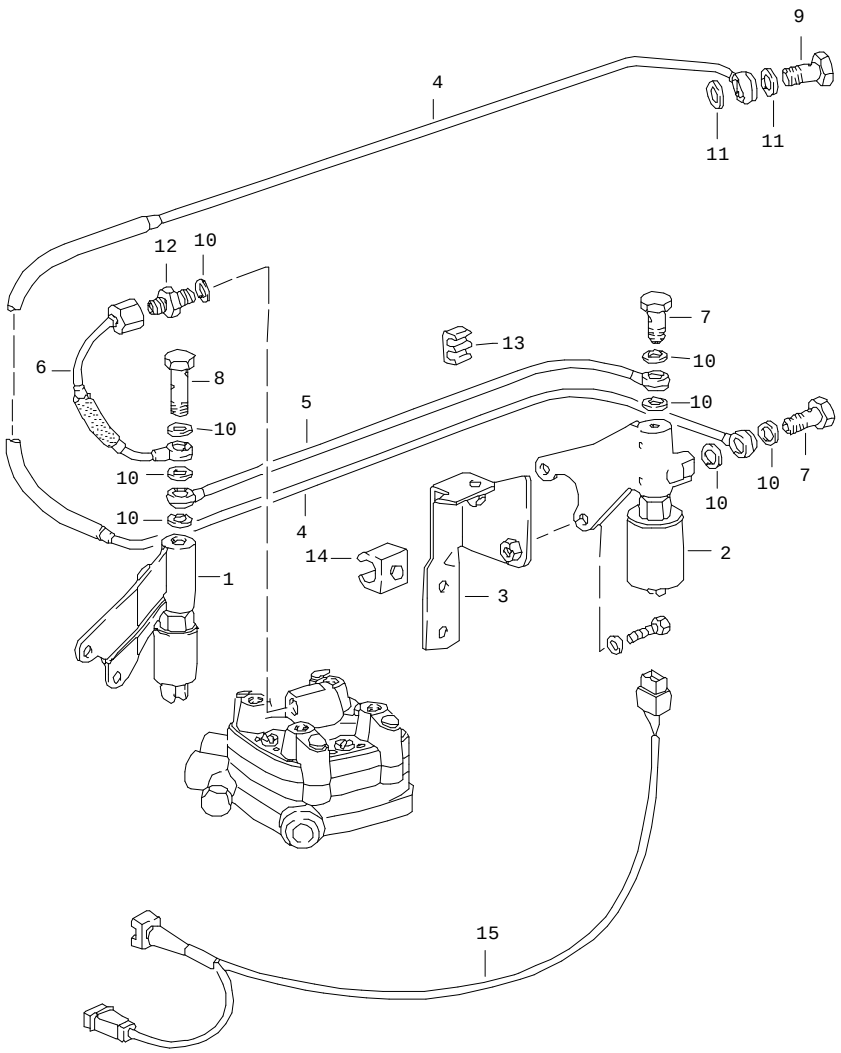


| Pos | Part Number | Name | Remarks | Qty | Model |
|---|---|---|---|---|---|
| | | k-jetronic<br>2 A | | | 924 |
| | | F 92FN4 02804>> | | | |
| 1 | 477 133 539 B | solenoid valve | | 1 | |
| 2 | 477 133 539 C | solenoid valve | | 1 | |
| 3 | 477 133 827 B | support | | 1 | |
| 4 | 047 133 655 D | fuel line | | 1 | |
| 5 | 047 133 685 | fuel line | | 1 | |
| 6 | 047 133 627 C | fuel line | | 1 | |
| 7 | N 021 073 1 | banjo bolt | | 2 | |
| 8 | N 900 887 01 | banjo bolt | | 1 | |
| 9 | 900 175 002 02 | screw | | 1 | |
| 10 | 900 123 115 30 | sealing ring | | 7 | |
| 11 | N 013 806 2 | sealing ring | | 2 | |
| 12 | 063 133 541 | screw socket | | 1 | |
| 13 | 928 110 150 00 | terminal | | 1 | |
| 14 | 999 507 255 40 | cable holder | | 1 | |
| 15 | E 477 971 973 | wiring harness | | 1 | |
| | | - -- E N D -- - | | | |

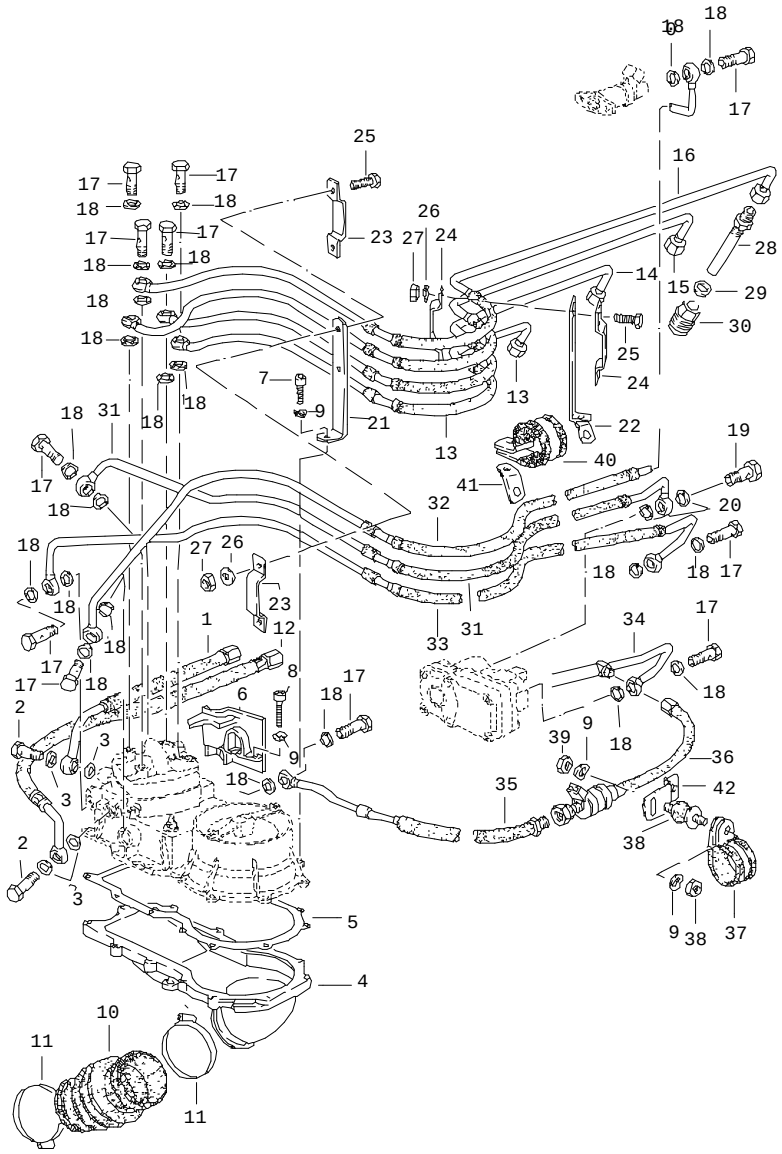

| Pos | Part Number | Name | Remarks | Qty | Model |
|---|---|---|---|---|---|
| | | k-jetronic<br>2 | | | TURBO/GT |
| 1 | 931 110 301 03 | fuel line<br>intake<br>mixture control unit | | 1 | |
| 2 | 900 175 020 02 | banjo bolt | | 2 | |
| 3 | 900 123 005 30 | sealing ring<br>A 12 X 16 | | 4 | |
| 4 | 931 110 035 00 | mixture control unit<br>lower part | | 1 | M31.01 |
| (4) | 931 110 035 01 | lower part | | 1 | M31.01/02<br>(S)(AUS)(J)<br>(CDN) (USA) |
| (4) | 931 110 035 03 | lower part | 81- | 1 | M31.03/04/50 |
| 5 | 931 110 137 01 | gasket | | 1 | |
| 7 | 900 067 011 02 | pan-head screw<br>M 6 X 20 | | 10 | |
| 9 | N 012 226 5 | spring washer<br>B 6 | | 10 | |
| 10 | 931 110 138 04 | bellows | | 1 | |
| 11 | 999 512 317 00 | clip<br>60 - 80 | | 2 | |
| 12 | 931 110 302 04 | fuel line<br>return<br>mixture control unit | | 1 | |
| 13 | 931 110 041 00 | injection line<br>cylinder 1 | | 1 | |
| 14 | 931 110 042 00 | injection line<br>cylinder 2 | | 1 | |
| 15 | 931 110 043 00 | injection line<br>cyl. 3 | | 1 | |
| 16 | 931 110 044 00 | injection line<br>cyl. 4 | | 1 | |
| 17 | 911 110 899 00 | banjo bolt | | 9 | |
| 18 | 900 123 050 20 | sealing ring<br>A 8 X 11,5 | | 18 | |

| Pos | Part Number | Name | Remarks | Qty | Model |
|---|---|---|---|---|---|
| 19 | 900 175 002 02 | screw | | 1 | |
| 20 | N 013 806 2 | sealing ring<br>A 10 X 14 | | 2 | |
| 21 | 931 110 131 01 | support | | 1 | |
| 22 | 931 110 190 02 | support | | 1 | |
| 23 | E N 028 550 1 | clip<br>4 X 7 | | 2 | |
| 24 | E N 028 453 1 | clip<br>4 X 10 | | 2 | |
| 25 | 900 075 092 02 | hexagon-head bolt<br>M 4 X 10 | | 4 | |
| 26 | 900 031 009 02 | washer<br>4,3 | | 4 | |
| 27 | N 011 004 6 | hexagon nut<br>M 4 | | 4 | |
| 28 | 931 110 225 00 | injector valve | | 4 | |
| 29 | 900 123 033 20 | sealing ring<br>A 10 X 13,5 | | 4 | |
| 30 | 931 110 226 01 | socket | | 4 | |
| 31 | 931 110 303 01 | fuel line | | 1 | |
| 32 | 931 110 304 01 | fuel line | | 1 | |
| 33 | 931 110 306 01 | fuel line | | 1 | |
| 40 | 999 511 115 02 | clip | | 1 | |
| 41 | 931 110 193 00 | support | | 1 | |
| | | - -- E N D -- - | | | |

| Pos | Part Number | Name | Remarks | Qty | Model |
|---|---|---|---|---|---|

| Model | Year | MG | SG | Illustration | Restrictions | Update | | | | |
|---|---|---|---|---|---|---|---|---|---|---|
| 924 | 85 | 1 | 07 | 107-20 | | 179 | 9:55 | 16.08.2004 | PORSCHE | PET | PORSCHE |

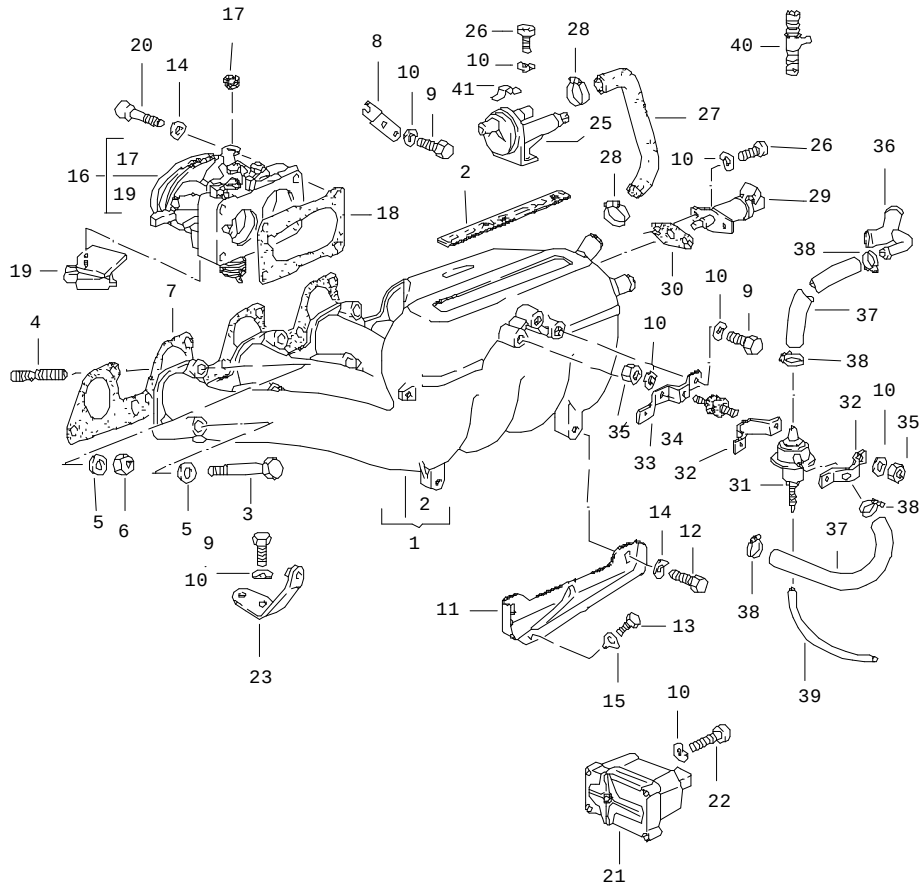


| Pos | Part Number | Name | Remarks | Qty | Model |
|---|---|---|---|---|---|
| | | k-jetronic<br>3 | | | 924 |
| 1 | 477 133 201 | intake manifold | | 1 | |
| 2 | 931 110 403 00 | logo | | 1 | |
| 3 | N 010 373 2 | hexagon-head bolt<br>M 8 X 72 | | 4 | |
| 4 | N 044 411 5 | stud<br>M 8 X 30 | | 4 | |
| 5 | N 011 525 13 | washer<br>A 8,4 | | 8 | |
| 6 | N 011 008 8 | hexagon nut<br>M 8 | | 4 | |
| 7 | * 477 133 227 | gasket | | 1 | |
| 8 | 047 133 239 | support | /LL | 1 | |
| (8) | 047 133 239 D | support | /RL | 1 | |
| 9 | N 010 215 13 | hexagon-head bolt<br>M 6 X 15 | | 4 | |
| 10 | N 012 226 5 | spring washer<br>A 6 | | 14 | |
| 11 | 048 129 723 | bracket | | 1 | |
| 12 | N 010 240 7 | hexagon-head bolt<br>M 8 X 20 | | 2 | |
| 13 | 900 075 087 02 | hexagon-head bolt<br>M 8 X 16 | | 1 | |
| 14 | N 012 241 11 | spring washer<br>B 8 | | 6 | |
| 15 | 999 039 001 00 | tab washer | | 1 | |
| 16 | 047 133 063 M | throttle housing | /LL | 1 | XK |
| (16) | 047 133 063 N | throttle housing | /RL | 1 | XJ |
| (16) | 047 133 063 P | throttle housing | AUT. | 1 | XJ XK |
| - | 056 129 777 | plug | | 1 | (S)(CH) |
| 17 | 823 721 567 | bearing sleeve | | 1 | |

| Pos | Part Number | Name | Remarks | Qty | Model |
|---|---|---|---|---|---|
| 18 | 049 133 073 B | gasket | | 1 | |
| 20 | N 014 717 2 | pan-head screw<br>M 8 X 40 | | 4 | |
| 21 | 063 133 403 | warm-up valve | | 1 | XJ XK VC |
| 22 | N 014 744 1 | pan-head screw<br>M 6 X 32 | | 2 | |
| 23 | 047 133 093 A | support | | 1 | |
| 25 | 047 133 453 A | auxiliary air regulator | | 1 | XJ XK |
| 26 | N 014 703 2 | pan-head screw<br>M 6 X 18 | | 4 | |
| 27 | 047 133 497 B | hose | | 1 | |
| 28 | 999 512 346 00 | hose clamp<br>LC 16 - 25 | | 2 | |
| 29 | 930 606 107 00 | electric starting valve | | 1 | XJ XK VC |
| 29 | 477 906 171 | electric starting valve | 81- | 1 | XJ XK |
| 30 | 063 906 179 | gasket | | 1 | |
| 31 | 047 131 013 A | vacuum limiter | | 1 | (S) (AUS)<br>(CH) |
| 32 | 047 131 039 | clip | | 2 | |
| 33 | 047 131 455 A | bracket | | 1 | |
| 34 | 999 703 239 00 | bonded rubber buffer | | 2 | |
| 35 | 900 076 010 02 | hexagon nut<br>M 6 | | 4 | |
| 36 | 047 131 461 A | branch socket | | 1 | |
| - | N 020 359 1 | hose | | * | |
| 37 | - | 9 X 2,5 MM | | 2 | |
| 38 | 999 512 554 00 | hose clamp<br>12 - 20 | | 4 | |
| - | N 020 361 2 | hose | | * | |
| 39 | - | 4 X 2,5 MM | | 1 | |
| 40 | 477 133 563 | t-socket | | 1 | (S) (AUS)<br>(CH) |
| 41 | 477 133 527 | retaining clip | | 1 | |

- -- E N D -- -

| Model | Year | MG | SG | Illustration | Restrictions | Update | 9:56 | 16.08.2004 | PORSCHE | PET | PORSCHE |
|---|---|---|---|---|---|---|---|---|---|---|---|
| 924 | 85 | 1 | 07 | 107-25 | | 179 | | | | | |

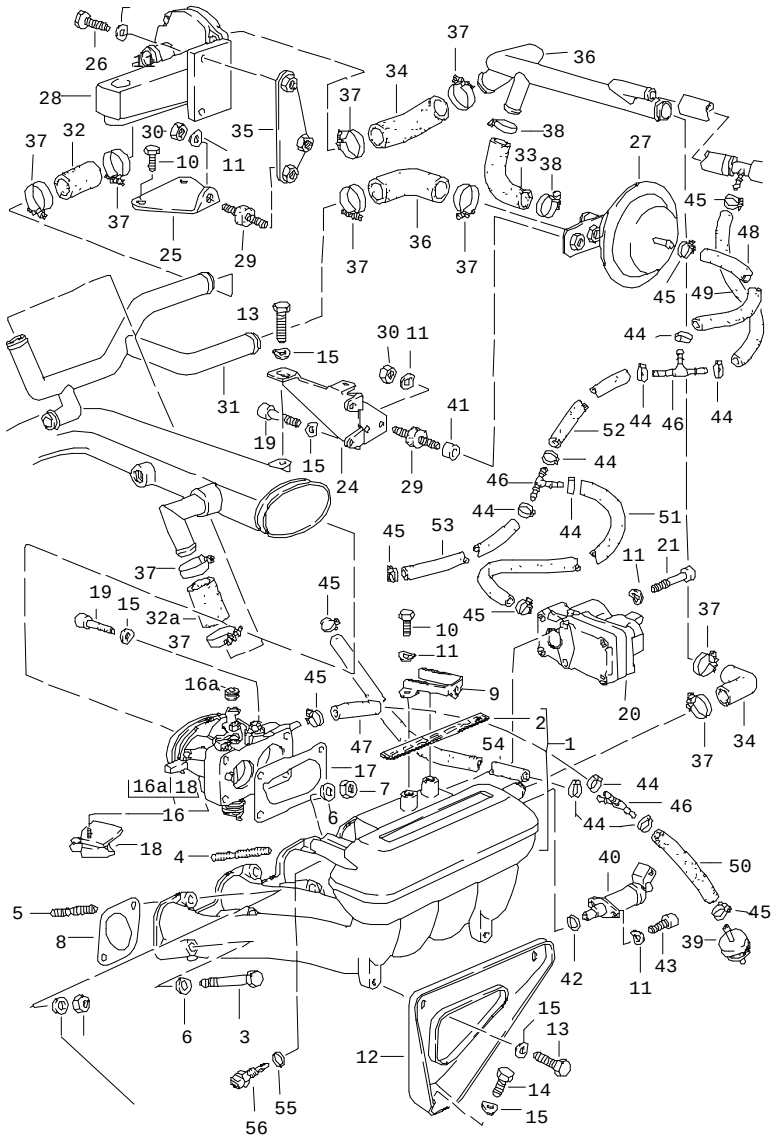


| Pos | Part Number | Name | Remarks | Qty | Model |
|---|---|---|---|---|---|
| | | k-jetronic<br>3 | | | TURBO/GT |
| 1 | 931 110 059 01 | intake manifold | | 1 | M31.01/02 |
| (1) | 931 110 059 05 | intake manifold | 81- | 1 | M31.03/04/50 |
| 2 | 931 110 403 00 | logo | | 1 | M31.01/02 |
| 3 | 900 074 170 02 | hexagon-head bolt<br>M 8 X 68 | | 3 | |
| (3) | N 010 375 4 | hexagon-head bolt<br>M 8 X 75 | | 1 | |
| 4 | 999 062 010 02 | stud<br>M 8 X 35 | | 2 | |
| 5 | 999 062 044 02 | stud<br>M 8 X 30 | | 2 | |
| 6 | 900 025 007 02 | washer<br>A 8,4 | | 8 | |
| 7 | 900 076 025 02 | hexagon nut<br>M 8 | | 4 | |
| 8 | * 931 110 147 00 | gasket | | 4 | |
| 9 | 931 110 166 01 | support | /LL | 1 | M31.01/02 |
| (9) | 931 110 179 00 | support | /LL 81- | 1 | M31.03/04/50 |
| (9) | 932 110 165 00 | support | /RL | 1 | M31.01 |
| 10 | 900 075 016 02 | hexagon-head bolt<br>M 6 X 16 | | 4 | |
| 11 | N 012 226 5 | spring washer<br>B 6 | | 14 | |
| 12 | 931 110 145 01 | bracket | | 1 | |
| 13 | N 010 240 16 | hexagon-head bolt<br>M 8 X 20 | | 3 | |
| 14 | 900 075 087 02 | hexagon-head bolt<br>M 8 X 16 | | 1 | |
| 15 | N 012 241 8 | spring washer<br>B 8 | | 8 | |
| 16 | 931 110 061 02 | throttle body | /LL | 1 | M31.01 |

| Pos | Part Number | Name | Remarks | Qty | Model |
|---|---|---|---|---|---|
| (16) | 931 110 061 05 | throttle body | /RL | 1 | M31.01 |
| (16) | 931 110 065 00 | throttle housing | /LL 81- | 1 | M31.03/50 |
| (16) | 931 110 067 00 | throttle housing | /RL 81- | 1 | M31.03/50 |
| - | 944 110 071 00 | return spring | 81- | 1 | M31.03/04/50 |
| 16A | 823 721 567 | bearing sleeve | | 1 | M31.01/02 |
| 17 | 049 133 073 B | gasket | | 1 | M31.01/02 |
| (17) | 999 701 468 40 | round seal<br>67,5 X 4 | 81- | 1 | M31.03/04/50 |
| (18) | 944 606 113 01 | throttle-valve switch | 81- | 1 | M31.03/50 |
| 19 | N 014 717 2 | pan-head screw<br>M 8 X 40 | | 4 | M31.01/02 |
| (19) | 900 067 089 02 | pan-head screw<br>M 6 X 25 | 81- | 2 | M31.03/04/50 |
| 20 | 931 606 105 00 | warm-up valve | | 1 | M31.01/02/03<br>M31.50 |
| 20 | 931 606 107 00 | warm-up valve | 81- | 1 | M31.03<br>(S) (AUS) |
| 21 | N 044 703 3 | pan-head screw<br>M 6 X 45 | | 2 | |
| 24 | 931 110 156 03 | support | | 1 | M31.01/02 |
| (24) | 931 110 207 03 | retaining bracket | /LL 81- | 1 | M31.03/04/50 |
| (24) | 932 110 131 01 | retaining bracket<br>with<br>support | /RL 81- | 1 | M31.03/50 |
| 25 | 931 110 162 00 | retaining bracket | | 1 | |
| 26 | 900 075 010 02 | hexagon-head bolt<br>M 6 X 12 | | 2 | |
| 27 | 930 110 173 00 | vacuum limiter | | 1 | M31.01/02/04 |
| 27 | 930 110 173 00 | vacuum limiter | 81- | 1 | M31.03<br>(S) (AUS) |
| 27 | 930 110 173 00 | vacuum limiter | 81- | 1 | M31.03/50 |
| 28 | 930 606 102 00 | auxiliary air regulator | | 1 | M31.01/02 |
| 28 | 931 606 102 00 | auxiliary air regulator | 81- | 1 | M31.03/04/50 |
| 29 | 931 110 191 00 | bonded rubber buffer | | 3 | |
| 30 | 900 076 010 02 | hexagon nut<br>M 6 | | 4 | |
| 31 | 931 110 171 05 | pipe | | 1 | M31.01/02 |
| (31) | 931 110 178 00 | pipe | 81- | 1 | M31.03/04 |
| (31) | 931 110 178 01 | pipe | 81 | 1 | M31.50 |
| 32 | 931 110 173 01 | hose<br>18 X 26<br>48 MM | | 1 | |
| 32A | 931 110 173 01 | hose<br>18 X 26 | | 1 | M31.01/02 |
| (32A) | 931 110 183 01 | hose | | 1 | M31.03/04 |
| 33 | 931 110 181 01 | hose | | 1 | |
| 34 | 931 110 183 01 | hose | | 3 | |
| 35 | 931 110 161 00 | retaining bracket | | 1 | |
| (35) | 931 110 161 01 | retaining bracket | 81 | 1 | M31.50 |
| 36 | E 931 110 172 03 | pipe | | 1 | |
| 37 | 999 512 237 02 | hose clamp | | 10 | |
| 38 | 999 512 254 02 | hose clamp<br>24 X 9 | | 2 | |
| 39 | 931 110 321 00 | check valve | 80 | 1 | |
| 40 | 930 606 107 00 | electric starting valve | | 1 | |
| 41 | 052 109 135 | spacer sleeve | | 2 | |
| 42 | 999 701 395 50 | o-ring | | 1 | |
| 43 | N 014 740 2 | pan-head screw<br>M 6 X 16 | | 2 | |
| 44 | 999 512 327 02 | hose clamp | | 9 | |
| 45 | 999 512 159 02 | hose clamp | | 7 | |
| 46 | 999 137 004 40 | t-socket | | 3 | |

| Pos | Part Number | Name | Remarks | Qty | Model |
|---|---|---|---|---|---|
| - | 999 239 010 40 | hose<br>4 X 9 | | * | |
| 47 | - | 35 MM | | 1 | |
| 48 | - | 50 MM | | 1 | |
| 49 | - | 85 MM | | 1 | |
| 50 | - | 110 MM | | 1 | |
| 51 | - | 130 MM | | 1 | |
| 52 | - | 200 MM | | 1 | |
| 53 | - | 260 MM | | 1 | |
| 54 | - | 500 MM | | 1 | |
| 55 | 900 123 007 30 | sealing ring | 81- | 1 | M31.03/04/50 |
| 56 | E 931 606 123 00 | temperature sensor<br>for<br>charge air cooler | 81- | 1 | M31.03/04/50 |
| - | 931 110 129 00 | cover<br>auxiliary air regulator | 81 | 1 | M31.50 |
| | | - -- E N D -- - | | | |

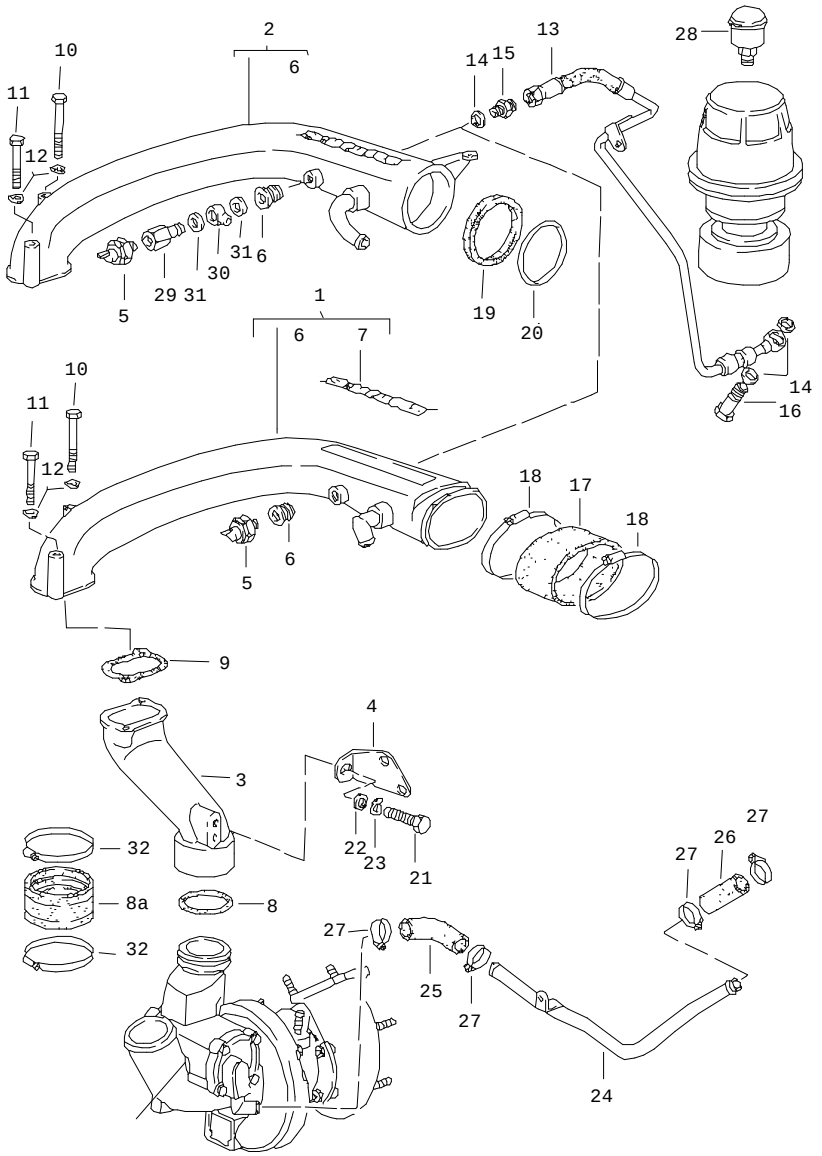


| Pos | Part Number | Name | Remarks | Qty | Model |
|---|---|---|---|---|---|
| | | turbocharging | | | TURBO/GT |
| 1 | 931 110 051 01 | pressure pipe | 80 | 1 | M31.01/02 |
| 2 | 931 110 051 03 | pressure pipe | 81 | 1 | M31.03/04 |
| 2 | 931 110 051 03 | pressure pipe | 82- | 1 | M31.03/04 |
| (3) | 931 110 160 01 | pressure pipe | 80 | 1 | M31.01/02 |
| 3 | 931 110 160 02 | pressure pipe | 81 | 1 | M31.03/04 |
| (3) | 931 110 019 00 | pressure pipe | 82- | 1 | M31.03/04 |
| 4 | 931 110 155 01 | support | | 1 | |
| 5 | 930 606 101 00 | switch | | 1 | |
| 6 | 930 110 367 01 | threaded insert | | 1 | |
| 7 | E 931 110 405 00 | logo | 80 | 1 | M31.01/02 |
| 8 | * 999 701 473 40 | round seal<br>47 X 5,7 | -81 | 1 | |
| 8A | 931 110 289 00 | rubber sleeve | 82- | 1 | M31.03/04 |
| 9 | * 931 110 152 01 | gasket | | 1 | |
| 10 | N 010 313 4 | hexagon-head bolt<br>M 6 X 85 | | 1 | |
| 11 | N 010 366 4 | hexagon-head bolt<br>M 6 X 55 | | 1 | |
| 12 | N 012 226 5 | spring washer<br>B 6 | | 2 | |
| 13 | 931 123 135 03 | control line | | 1 | TURBO |
| 14 | 900 123 043 30 | sealing ring<br>A 12 X 15,5 | | 3 | |
| 15 | N 020 704 2 | connection piece | | 1 | |
| 16 | 900 175 020 02 | banjo bolt | | 1 | |
| 17 | 931 110 157 02 | rubber sleeve | 80 | 1 | M31.01/02 |
| 18 | 999 512 350 02 | hose clamp<br>LA 80 X 100 | 80 | 2 | M31.01/02 |
| 19 | 931 110 379 00 | sealing ring | 81- | 1 | M31.03/04 |

| Pos | Part Number | Name | Remarks | Qty | Model |
|---|---|---|---|---|---|
| 20 | 999 701 477 40 | round seal<br>71,2 X 5,7 | 81- | 1 | M31.03/04 |
| 21 | 900 075 085 02 | hexagon-head bolt<br>M 8 X 20 | | 3 | |
| 22 | 900 025 007 02 | washer<br>A 8,4 | | 3 | |
| 23 | N 012 241 8 | spring washer<br>B 8 | | 3 | |
| 24 | 931 110 175 00 | line | | 1 | TURBO/GT |
| 25 | 931 110 185 01 | hose | | 1 | TURBO/GT |
| - | 999 239 007 40 | hose<br>15 X 24 | | * | TURBO/GT |
| 26 | - | 40 MM | | 1 | |
| 27 | 999 512 254 02 | hose clamp<br>S 24/9 | | 4 | TURBO/GT |
| 28 | 931 123 155 00 | bleeder valve | | 1 | TURBO/GT |
| 29 | 931 110 363 00 | screw socket | 81- | 1 | TURBO |
| 30 | 999 230 164 02 | nipple | 81- | 1 | TURBO |
| 31 | 900 123 033 20 | sealing ring<br>A 10 X 13,5 | 81- | 2 | TURBO |
| 32 | 999 512 349 02 | hose clamp<br>LB 50 - 70 | 82- | 2 | M31.03/04 |
| | | - -- E N D -- - | | | |

| Pos | Part Number | Name | Remarks | Qty | Model |
|---|---|---|---|---|---|

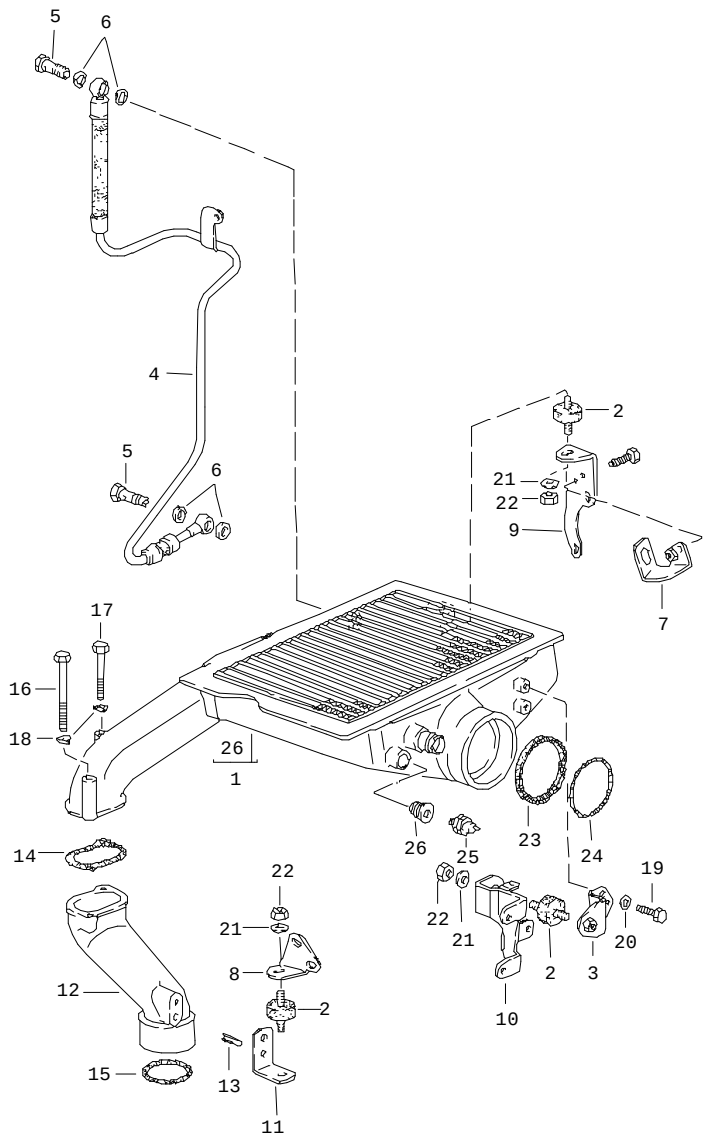


| Pos | Part Number | Name | Remarks | Qty | Model |
|---|---|---|---|---|---|
| | | charge air cooler | | | GT |
| 1 | 931 110 033 04 | charge air cooler | | 1 | |
| 2 | 931 110 136 00 | bonded rubber buffer | | 1 | |
| 3 | 931 110 134 00 | retaining bracket | | 1 | |
| 4 | 931 123 136 05 | control line | | 1 | |
| 5 | 900 175 020 02 | banjo bolt | | 2 | |
| 6 | 900 123 043 30 | sealing ring<br>A 12 X 15,5 | | 4 | |
| 7 | 932 110 210 01 | support | /RL | 1 | |
| 8 | 931 110 261 00 | support | | 1 | |
| 9 | 931 110 209 04 | retaining bracket | | 1 | |
| 10 | 931 110 207 03 | retaining bracket | /LL | 1 | |
| (10) | 932 110 131 01 | retaining bracket | /RL | 1 | |
| 11 | 931 110 260 00 | support | | 1 | |
| 12 | 931 110 160 02 | pressure pipe | | 1 | |
| 13 | E 900 095 031 00 | tensioning sleeve<br>6 X 16 | | 1 | |
| 14 | * 931 110 152 01 | gasket | | 1 | |
| 15 | * 999 701 473 40 | round seal<br>47 X 5,7 | | 1 | |
| 16 | N 010 313 4 | hexagon-head bolt<br>M 6 X 85 | | 1 | |
| 17 | N 010 366 4 | hexagon-head bolt<br>M 6 X 55 | | 1 | |
| 18 | N 012 226 5 | spring washer<br>B 6 | | 2 | |
| 19 | N 010 215 13 | hexagon-head bolt<br>M 6 X 15 | | 2 | |
| 20 | N 011 524 7 | washer<br>A 6,4 | | 2 | |
| 21 | 900 025 007 02 | washer<br>A 8,4 | | 4 | |

| Pos | Part Number | Name | Remarks | Qty | Model | Pos | Part Number | Name | Remarks | Qty | Model |
|---|---|---|---|---|---|---|---|---|---|---|---|
| 22 | 900 076 025 02 | hexagon nut<br>M 8 | | 2 | | | | | | | |
| 23 | 931 110 379 00 | sealing ring | | 1 | | | | | | | |
| 24 | 999 701 477 40 | round seal | | 1 | | | | | | | |
| 25 | 930 606 101 00 | switch | | 1 | | | | | | | |
| 26 | 930 110 367 01 | threaded insert | | 1 | | | | | | | |
| -- | 930 110 212 01 | connecting piece | | 1 | | | | | | | |
| | | - -- E N D -- - | | | | | | | | | |

| Model | Year | MG | SG | Illustration | Restrictions | Update | | | | |
|---|---|---|---|---|---|---|---|---|---|---|
| 924 | 85 | 1 | 09 | 109-00 | | 179 | 9:56 | 16.08.2004 | PORSCHE | PET | PORSCHE |

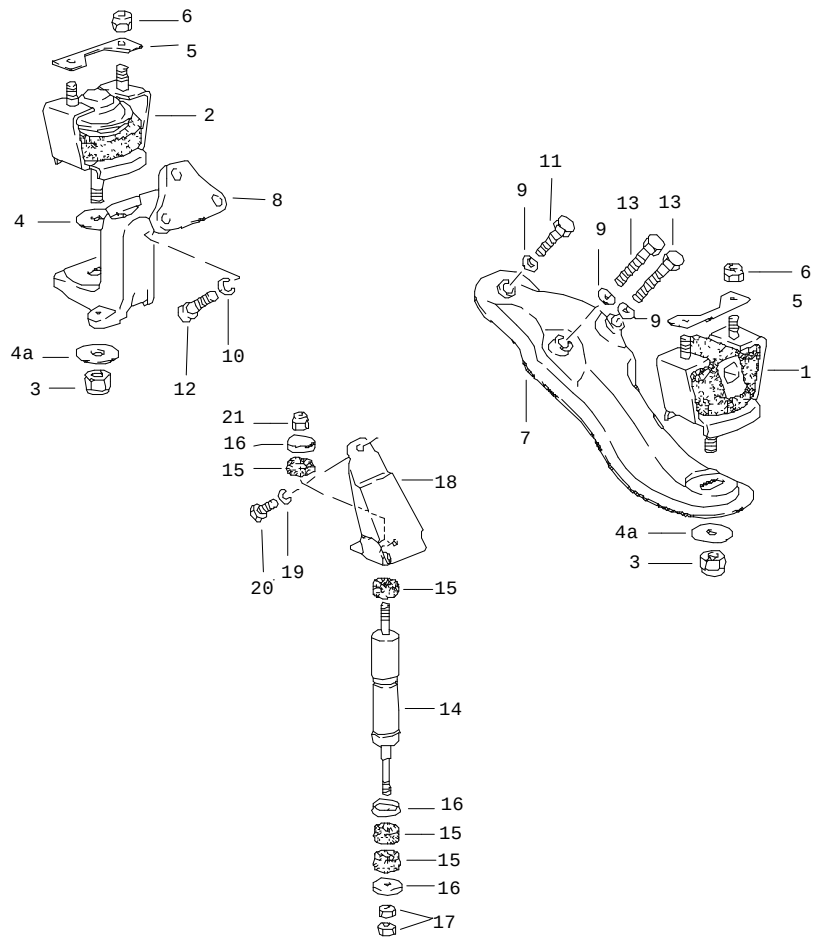


| Pos | Part Number | Name | Remarks | Qty | Model |
|---|---|---|---|---|---|
| | | engine suspension | | | |
| 1 | E 477 199 301 | bonded rubber mounting | /L | 1 | 924 |
| (1) | E 477 199 301 A | bonded rubber mounting | /L | 1 | TURBO/GT |
| 2 | 477 199 303 | bonded rubber mounting | /R | 1 | |
| 3 | N 021 131 1 | lock nut<br>VM 12 | | 2 | |
| 4 | 803 199 347 | washer<br>13 X 31 | | 1 | |
| 4A | 999 025 119 02 | washer | | 2 | |
| 5 | 477 199 311 A | plate | | 2 | |
| 6 | N 022 149 2 | lock nut<br>VM 10 | | 4 | |
| 7 | 477 199 305 C | bracket | /L | 1 | 924 |
| (7) | 931 375 021 01 | bracket | /L/LL | 1 | TURBO/GT |
| (7) | 931 375 021 01 | bracket | /L/LL | 1 | TURBO/GT |
| 7 | 477 199 305 C | bracket | /L/RL | 1 | TURBO/GT |
| 8 | 477 199 308 C | bracket | /R | 1 | 924 |
| (8) | 931 375 124 00 | bracket | /R/LL | 1 | TURBO/GT |
| 8 | 477 199 308 C | bracket | /R/RL | 1 | TURBO/GT |
| 9 | N 012 231 1 | spring washer<br>A 10 | | 3 | |
| 10 | 900 027 016 02 | lock ring<br>B 10 | | 3 | |
| 11 | N 010 445 3 | hexagon-head bolt<br>M 10 X 45 | | 1 | |
| 12 | N 014 721 2 | pan-head screw<br>M 10 X 25 | | 3 | |
| 13 | N 010 460 2 | hexagon-head bolt<br>M 10 X 60 | | 2 | |
| - | E 931 375 901 00 | installation set<br>vibration damper<br>for subsequent installat. | /LL | 1 | TURBO/GT |

| Pos | Part Number | Name | Remarks | Qty | Model | Pos | Part Number | Name | Remarks | Qty | Model |
|---|---|---|---|---|---|---|---|---|---|---|---|
| | | - -- E N D -- - | | | | | | | | | |

| Model | Year | MG | SG | Illustration | Restrictions | Update | | |
|---|---|---|---|---|---|---|---|---|
| 924 | 85 | 1 | 98 | REP | | 179 | 10:40 | 16.08.2004 |

| Pos | Part Number | Name | Remarks | Qty | Model |
|---|---|---|---|---|---|
| | | repair kits | | | |
| >> | > 060 198 011 | set of seals<br>for<br>cylinder block<br>comprising: | | 1 | |
| - | 059 103 051 D | sealing ring | | 1 | |
| - | E 048 115 147 | sealing ring<br>gasket<br>gasket<br>gasket | | 1<br>2<br>1<br>1 | |
| - | 046 115 189 A | gasket | | 1 | |
| - | 048 115 257 | gasket<br>o-ring | | 1<br>1 | |
| - | 046 121 041 A | gasket | | 1 | |
| - | 038 121 119 B | sealing ring | | 1 | |
| - | N 043 854 1 | sealing ring | | 1 | |
| >> | > 047 198 012 A | set of seals<br>for<br>cylinder head<br>comprising: | | 1 | 924 XJ XK VC |
| - | 068 103 085 A | sealing ring | | 1 | |
| - | 048 103 095 | sealing ring | | 1 | |
| - | 931 104 337 06 | cylinder head gasket | | 1 | |
| - | 060 198 025 A | set of seals | | 1 | |
| - | 046 109 675 A | valve stem seal<br>with<br>assembly sleeve | | 8 | |
| - | 048 121 127 A | gasket | | 1 | |
| - | 059 127 311 A | gasket | | 1 | |
| - | 048 129 589 A | gasket | | 4 | |
| - | 477 133 227 | gasket | | 1 | |
| - | 048 905 341 B | gasket | | 1 | |
| - | 056 905 261 | gasket | | 1 | |
| >> | > 931 100 901 00 | set of seals<br>for<br>cylinder head<br>comprising: | | 1 | TURBO/GT |
| - | 068 103 085 A | sealing ring | | 1 | |

| Model | Year | MG | SG | Illustration | Restrictions | Update | | |
|---|---|---|---|---|---|---|---|---|
| 924 | 85 | 1 | 98 | REP | | 179 | 10:40 | 16.08.2004 |

| Pos | Part Number | Name | Remarks | Qty | Model |
|---|---|---|---|---|---|
| - | 048 103 095 | sealing ring | | 1 | |
| - | 060 198 025 A | set of seals | | 1 | |
| - | 931 104 337 06 | cylinder head gasket | | 1 | |
| - | 046 109 675 A | valve stem seal<br>with<br>assembly sleeve | | 8 | |
| - | 931 110 147 00 | gasket | | 4 | |
| - | 931 110 152 01 | gasket | | 1 | |
| - | 930 111 191 01 | gasket | | 4 | |
| - | 048 121 127 A | gasket | | 1 | |
| - | 048 905 341 B | gasket | | 1 | |
| - | 993 111 195 00 | sealing ring | | 1 | |
| - | 931 123 193 05 | gasket | | 1 | |
| - | 931 111 191 10 | gasket | | 1 | |
| - | 999 701 473 40 | round seal | | 1 | |
| - | 056 905 261 | gasket | | 1 | |
| >> | > 060 198 041 A | set of seals<br>for oil sump<br>comprising:<br>gasket<br>gasket<br>gasket<br>gasket | | 1<br><br><br>1<br>1<br>1<br>2 | |
| - | N 043 854 1 | sealing ring | | 1 | |
| >> | > 060 198 025 A | set of seals<br>for<br>cylinder head cover<br>comprising:<br>sealing strip<br>gasket | | 1<br><br><br><br>2<br>2 | |
| >> | > 060 198 151 | set of piston rings<br>86,50 MM<br>comprising:<br>piston ring<br>groove 1<br>piston ring<br>groove 2<br>oil scraper ring | | X<br><br><br>1<br><br>1<br><br>1 | 924 XJ XK VC |

| Model | Year | MG | SG | Illustration | Restrictions | Update | | |
|---|---|---|---|---|---|---|---|---|
| 924 | 85 | 1 | 98 | REP | | 179 | 10:40 | 16.08.2004 |

| Pos | Part Number | Name | Remarks | Qty | Model |
|---|---|---|---|---|---|
| >> | > 060 198 153 | set of piston rings<br>86,75 MM<br>comprising:<br>piston ring<br>groove 1<br>piston ring<br>groove 2<br>oil scraper ring | | X<br><br><br>1<br><br>1<br><br>1 | 924 XJ XK VC |
| >> | > 060 198 155 | set of piston rings<br>87,00 MM<br>comprising:<br>piston ring<br>groove 1<br>piston ring<br>groove 2<br>oil scraper ring | | X<br><br><br>1<br><br>1<br><br>1 | 924 XJ XK VC |
| >> | > 931 103 901 00 | set of piston rings<br>86,50 MM<br>comprising:<br>plain compression ring<br>compression ring<br>d-sf ring | 80 | X<br><br><br>1<br>1<br>1 | M31.01/02 |
| >> | > 931 103 901 01 | set of piston rings<br>86,50 MM<br>comprising:<br>plain compression ring<br>compression ring<br>d-sf ring | 81- | X<br><br><br>1<br>1<br>1 | M31.03/04<br>M31.04/50 |
| >> | > 931 103 901 25 | set of piston rings<br>86,75 MM<br>comprising:<br>plain compression ring<br>compression ring<br>d-sf ring | 80 | X<br><br><br>1<br>1<br>1 | M31.01/02 |
| >> | > 931 103 901 26 | set of piston rings<br>86,75 MM<br>comprising:<br>plain compression ring<br>compression ring<br>d-sf ring | 81- | X<br><br><br>1<br>1<br>1 | M31.03<br>M31.04/50 |
| >> | > 931 103 901 50 | set of piston rings<br>87,00 MM<br>comprising:<br>plain compression ring<br>compression ring<br>d-sf ring | 80 | X<br><br><br>1<br>1<br>1 | M31.01/02 |
| >> | > 931 103 901 51 | set of piston rings<br>87,00 MM<br>comprising:<br>plain compression ring<br>compression ring<br>d-sf ring | 81- | X<br><br><br>1<br>1<br>1 | M31.03<br>M31.04/50 |

| Model | Year | MG | SG | Illustration | Restrictions | Update | | |
|---|---|---|---|---|---|---|---|---|
| 924 | 85 | 1 | 98 | REP | | 179 | 10:40 | 16.08.2004 |

| Pos | Part Number | Name | Remarks | Qty | Model |
|---|---|---|---|---|---|
| >> | > 931 103 901 75 | set of piston rings<br>87,50 MM<br>comprising:<br>plain compression ring<br>compression ring<br>d-sf ring | 80 | X<br><br><br>1<br>1<br>1 | M31.01/02 |
| >> | > 931 103 901 76 | set of piston rings<br>87,50 MM<br>comprising:<br>plain compression ring<br>compression ring<br>d-sf ring | 81- | X<br><br><br>1<br>1<br>1 | M31.03<br>M31.04/50 |
| >> | > 046 198 401 | connecting rod<br>1 set<br>comprising:<br>connecting rod | | 1<br><br><br>4 | |
| - | E 059 105 425 A | connecting rod bolt | | 8 | |
| - | 059 105 427 A | hexagon nut | | 8 | |
| - | E 059 105 431 | connecting rod bush | | 4 | |
| >> | > 046 105 701 | connecting-rod bearing<br>1 set<br>comprising: | | 1 | |
| - | E 046 105 701 | connecting-rod bearing | | 8 | |
| >> | > 046 198 503 A | connecting-rod bearing<br>1 set<br>undersize 0,25 mm<br>comprising: | | 1 | |
| - | E 046 105 707 | connecting-rod bearing | | 8 | |
| >> | > 046 198 505 A | connecting-rod bearing<br>1 set<br>undersize 0,50 mm<br>comprising: | | 1 | |
| - | E 046 105 713 | connecting-rod bearing | | 8 | |
| >> | > 046 105 719 | connecting-rod bearing<br>1 set<br>undersize 0,75 mm<br>comprising: | | 1 | |
| - | 046 105 719 | connecting-rod bearing | | 8 | |
| >> | > 046 198 451 | crankshaft bearing<br>1 set<br>comprising: | | 1 | |
| - | 046 105 501 | crankshaft bearing<br>thrust bearing | | 2 | |

| Model | Year | MG | SG | Illustration | Restrictions | Update | | |
|---|---|---|---|---|---|---|---|---|
| 924 | 85 | 1 | 98 | REP | | 179 | 10:40 | 16.08.2004 |

| Pos | Part Number | Name | Remarks | Qty | Model |
|---|---|---|---|---|---|
| - | 046 105 561 | crankshaft bearing<br>upper<br>numbers 1,2,4,5 | | 4 | |
| - | 046 105 591 | crankshaft bearing<br>lower<br>numbers 1,2,4,5 | | 4 | |
| >> | > 046 198 453 | crankshaft bearing<br>1 set<br>undersize 0,25 mm<br>comprising: | | 1 | |
| - | 046 105 507 | crankshaft bearing<br>thrust bearing | | 2 | |
| - | 046 105 567 | crankshaft bearing<br>upper<br>numbers 1,2,4,5 | | 4 | |
| - | E 046 105 597 | crankshaft bearing<br>lower<br>numbers 1,2,4,5 | | 4 | |
| >> | > 046 198 455 | crankshaft bearing<br>1 set<br>undersize 0,50 mm<br>comprising: | | 1 | |
| - | 046 105 513 | crankshaft bearing<br>thrust bearing | | 2 | |
| - | 046 105 573 | crankshaft bearing<br>upper<br>numbers 1,2,4,5 | | 4 | |
| - | 046 105 603 | crankshaft bearing<br>lower<br>numbers 1,2,4,5 | | 4 | |
| >> | > 046 198 457 | crankshaft bearing<br>1 set<br>undersize 0,75 mm<br>comprising: | | 1 | |
| - | 046 105 519 | crankshaft bearing<br>thrust bearing | | 2 | |
| - | 046 105 579 | crankshaft bearing<br>upper<br>numbers 1,2,4,5 | | 4 | |
| - | 046 105 609 | crankshaft bearing<br>lower<br>numbers 1,2,4,5 | | 4 | |
| >> | > 047 198 950 | maintenance set<br>for 20,000 km intervals<br>comprising: | 80- | 1 | 924 XJ XK |
| - | 060 198 025 A | set of seals | | 1 | |

| Model | Year | MG | SG | Illustration | Restrictions | Update | | |
|---|---|---|---|---|---|---|---|---|
| 924 | 85 | 1 | 98 | REP | | 179 | 10:40 | 16.08.2004 |

| Pos | Part Number | Name | Remarks | Qty | Model |
|---|---|---|---|---|---|
| - | N 043 854 1 | sealing ring | | 1 | |
| - | 021 129 620 | air cleaner cartridge | | 1 | |
| - | 931 107 701 00 | oil filter | | 1 | |
| - | 930 110 076 00 | fuel filter | | 1 | |
| - | 999 170 165 90 | spark plug | | 4 | |
| >> | > 931 100 930 00 | maintenance set<br>for 20,000 km intervals<br>comprising: | 80 | 1 | TURBO<br>M31.01 |
| - | 060 198 025 A | set of seals | | 1 | |
| - | N 043 854 1 | sealing ring | | 1 | |
| - | 931 110 152 01 | gasket | | 1 | |
| - | 931 110 121 00 | air cleaner cartridge | | 1 | |
| - | 931 107 701 00 | oil filter | | 1 | |
| - | 931 110 149 04 | fuel filter | | 1 | |
| - | 999 170 140 90 | spark plug | | 4 | |
| >> | > 931 100 930 01 | maintenance set<br>for 20,000 km intervals<br>comprising: | 81- | 1 | TURBO/GT<br>M31.03/50 |
| - | 999 701 473 40 | round seal | | 1 | |
| - | 999 701 477 40 | round seal | | 1 | |
| - | 060 198 025 A | set of seals | | 1 | |
| - | N 043 854 1 | sealing ring | | 1 | |
| - | 931 110 152 01 | gasket | | 1 | |
| - | 931 110 121 00 | air cleaner cartridge | | 1 | |
| - | 931 107 701 00 | oil filter | | 1 | |
| - | 931 110 149 04 | fuel filter | | 1 | |
| - | 999 170 140 90 | spark plug | | 4 | |
| | | vibration damper<br>for subsequent installat. | | | |
| >> | > 931 375 901 00 | installation set<br>comprising: | /LL | 1 | TURBO/GT |
| - | E 477 199 501 A | vibration damper | /R | 1 | |
| - | E 477 199 501 B | vibration damper | /L | 1 | |
| - | 477 199 143 | cover plate | /R | 1 | |

| Model | Year | MG | SG | Illustration | Restrictions | Update | | |
|---|---|---|---|---|---|---|---|---|
| 924 | 85 | 1 | 98 | REP | | 179 | 10:40 | 16.08.2004 |

| Pos | Part Number | Name | Remarks | Qty | Model |
|---|---|---|---|---|---|
| - | E 999 512 311 02 | clip | /R | 1 | |
| - | 928 375 166 01 | rubber buffer | | 4 | |
| - | 928 375 167 01 | washer | | 2 | |
| - | 900 910 010 09 | lock nut | | 2 | |
| - | N 010 023 2 | hexagon-head bolt | | 1 | |
| - | E N 010 440 3 | hexagon-head bolt | | 1 | |
| - | N 011 527 12 | washer | | 2 | |
| - | N 022 149 2 | lock nut | | 1 | |
| - | N 011 525 13 | washer | | 1 | |
| | | - -- E N D -- - | | | |

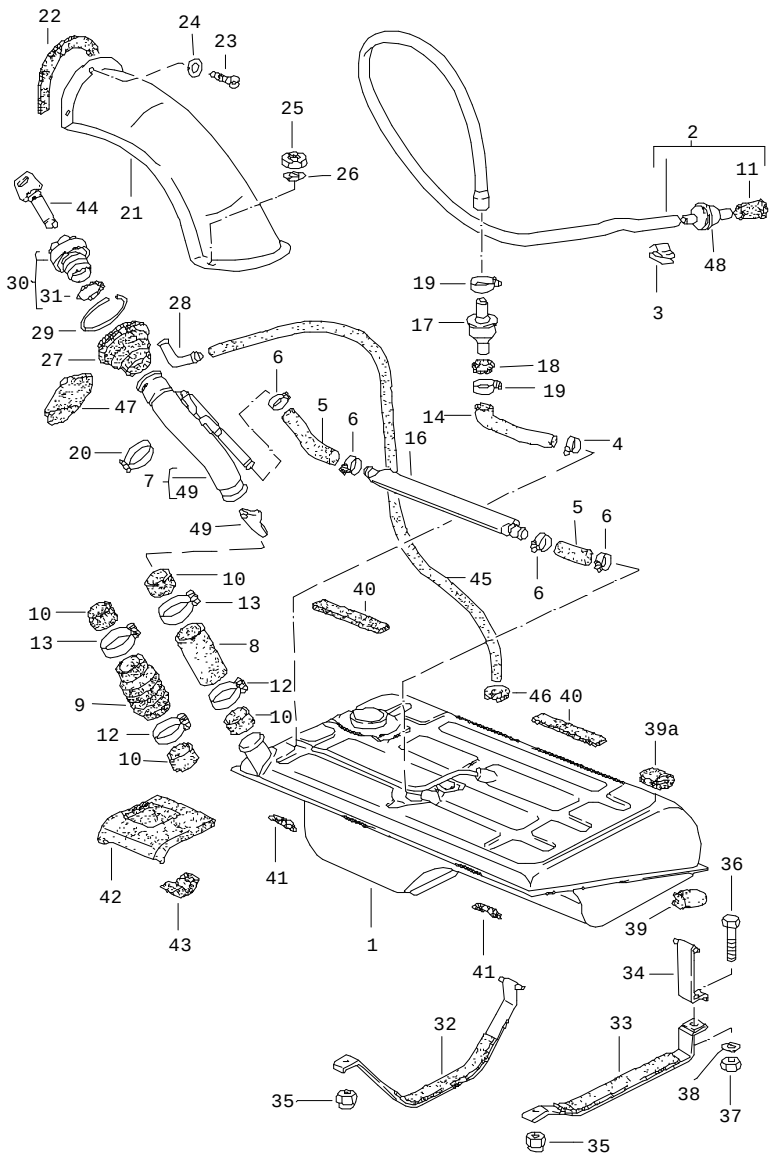


| Pos | Part Number | Name | Remarks | Qty | Model |
|---|---|---|---|---|---|
| | | fuel tank<br><br>F >>92CN4 02197<br>F >>93CN1 00305<br>F >>93BN7 00450 | | | |
| 1 | 477 201 021 F | fuel tank<br>62 liters<br>model year<br>80/81<br>use also:<br>931.201.049.00<br>N.020.378.1 | | 1 | |
| 1 | E 937 201 021 01 | fuel tank<br>84 litres<br>model year<br>80/81<br>use also:<br>931.201.049.00<br>N.020.378.1 | 81 | 1 | TURBO/GT |
| 2 | 477 201 115 A | breather hose | | 1 | |
| 3 | 477 971 939 | cable terminal | | 3 | |
| 4 | N 023 558 1 | hose clamp<br>A 9 X 10 | | 1 | |
| - | N 020 363 1 | hose | | * | |
| 5 | - | 15 X 2,5 MM | | | |
| 6 | N 024 125 2 | hose clamp<br>A 9 X 19 | | 4 | |
| 7 | 944 201 039 00 | filler neck | | 1 | |
| 8 | N 901 235 01 | hose<br>shorten<br>50 MM | | 1 | |
| 10 | 944 201 217 00 | hose | | 2 | |
| 11 | 321 201 890 A | end piece | | 1 | |
| 12 | 999 512 348 02 | hose clamp<br>LA 40-60 | | 1 | |
| 13 | 111 501 159 B | hose clamp<br>LA 44-64 | | 1 | |
| 14 | 477 201 159 B | breather hose | | 1 | |

| Pos | Part Number | Name | Remarks | Qty | Model |
|---|---|---|---|---|---|
| 16 | E 477 201 035 | expansion tank | | 1 | |
| 17 | 928 201 083 02 | shut-off valve | | 1 | |
| 18 | 111 971 911 A | rubber sleeve | | 1 | |
| 19 | N 023 570 2 | hose clamp<br>A 9 X 15 | | 2 | |
| 20 | N 020 902 1 | tie-wrap<br>6,5 X 210 | | 1 | |
| 21 | 477 201 347 C | cover | | 1 | |
| 22 | 477 201 351 A | gasket | | 1 | |
| 23 | N 013 959 3 | tapping screw<br>B 3,5 X 16 | | 3 | |
| 24 | 900 151 028 02 | washer<br>4,3 | | 3 | |
| 25 | N 011 005 14 | hexagon nut<br>M 5 | | 2 | |
| 26 | 900 025 003 02 | washer<br>A 5,3 | | 2 | |
| 27 | 477 201 281 B | sleeve | | 1 | |
| 28 | 477 201 283 A | connection piece | | 1 | |
| 29 | 900 906 045 03 | snap ring<br>A 105 | | 1 | |
| 30 | 944 201 061 01 | fuel tank cap<br>without lock cylinder | | 1 | |
| 31 | 944 201 553 00 | gasket | | 1 | |
| 32 | 477 201 302 | restraining strap | /R | 1 | |
| (32) | 937 201 302 00 | restraining strap | /R 81 | 1 | TURBO/GT |
| 33 | 477 201 311 B | restraining strap | /L | 1 | |
| 34 | 477 201 395 | restraining strap | /L | 1 | |
| 35 | 311 101 463 | hexagon nut<br>M 8 | | 2 | |
| 36 | N 010 335 5 | hexagon-head bolt<br>M 8 X 35 | | 1 | |
| 37 | 900 910 022 09 | lock nut<br>M 8 | | 1 | |
| 38 | N 011 525 13 | washer<br>A 8,4 | | 1 | |
| 39 | 481 201 647 | intermediate piece | | 2 | |
| 39A | 944 201 647 00 | intermediate piece | | 2 | |
| 40 | 477 201 295 B | intermediate layer | | 4 | |
| 41 | 477 201 295 B | intermediate layer | | 1 | |
| 42 | 477 863 160 | gasket | | 1 | |
| 43 | 477 863 162 A | sound absorber | | 1 | |
| 44 | 477 201 594 | lock cylinder<br>with keys<br>w/o stipulated lock number | | 1 | |
| 44 | 477 201 594 A | lock cylinder<br>with 1 key<br>state lock number | | 1 | |
| 45 | 477 201 393 A | hose | | 1 | |
| 46 | 021 119 569 | rubber sleeve | | 1 | |
| 47 | 928 201 057 02 | protective flap | 81 | 1 | |
| 48 | 810 201 186 A | bleeder valve | 81 | 1 | |
| 49 | 931 201 359 02 | flap | | 1 | |

- -- E N D -- -

| Model | Year | MG | SG | Illustration | Restrictions | Update | 9:56 | 16.08.2004 | PORSCHE | PET | PORSCHE |
|---|---|---|---|---|---|---|---|---|---|---|---|
| 924 | 85 | 2 | 01 | 201-01 | | 179 | | | | | |

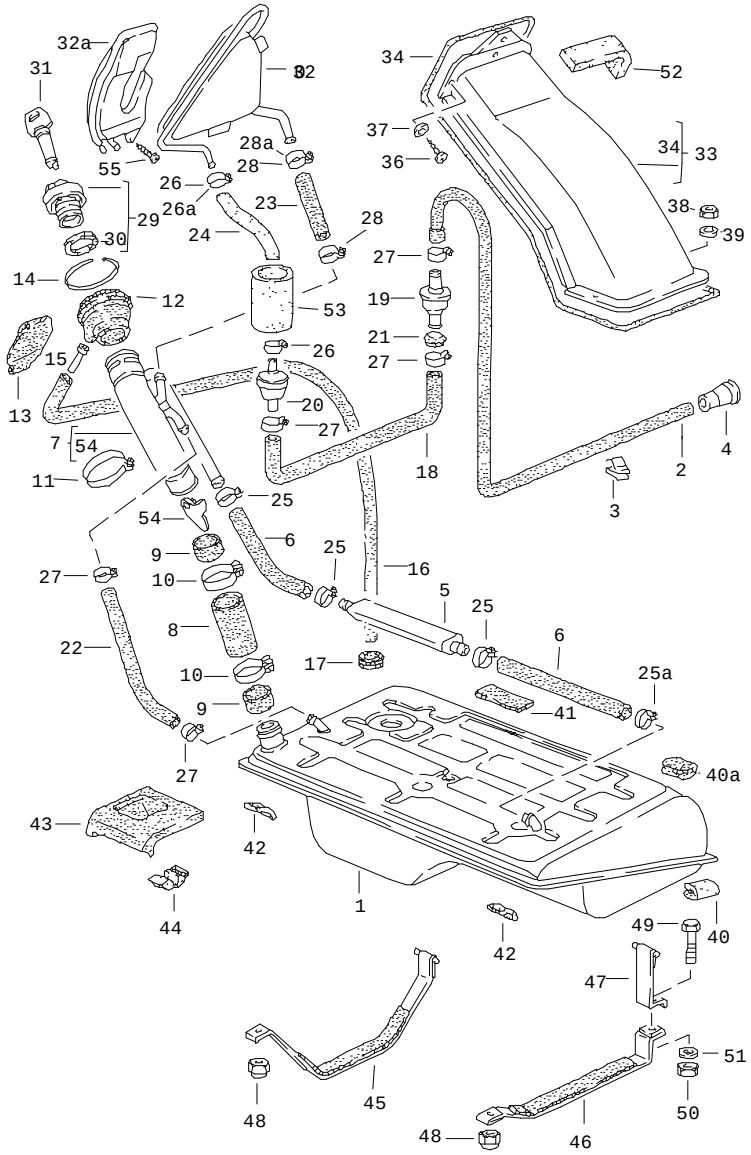


| Pos | Part Number | Name | Remarks | Qty | Model |
|---|---|---|---|---|---|
| | | fuel tank | | | |
| | | F 92CN4 02198>><br>F 93CN1 00306>> | | | |
| 1 | 477 201 021 F | fuel tank | | 1 | |
| (1) | E 937 201 021 01 | fuel tank<br>84 litres | | 1 | TURBO |
| 2 | 944 201 159 01 | breather hose<br>shorten<br>430 MM | | 1 | |
| 3 | 477 971 939 | cable terminal | | 3 | |
| 4 | 321 201 890 A | end piece | | 1 | |
| 5 | E 477 201 035 | expansion tank | | 1 | |
| - | N 020 363 1 | hose | | * | |
| 6 | - | 15 X 2,5 MM | | | |
| 7 | 944 201 039 00 | filler neck | | 1 | |
| 8 | N 901 235 01 | hose<br>shorten<br>30 MM | | 1 | |
| 9 | 944 201 217 00 | hose | | 2 | |
| 10 | 111 501 159 B | hose clamp<br>LA 44-64 | | 2 | |
| 11 | 999 513 003 40 | tie-wrap | | 1 | |
| 12 | 477 201 281 B | sleeve | | 1 | |
| 13 | 928 201 057 02 | protective flap | | 1 | |
| 14 | 900 906 045 03 | snap ring<br>B 105 | | 1 | |
| 15 | 477 201 283 A | connection piece | | 1 | |
| 16 | 477 201 393 A | hose | | 1 | |
| 17 | 021 119 569 | rubber sleeve | | 1 | |
| 18 | 944 201 449 00 | hose | | 1 | |
| 19 | 928 201 083 02 | shut-off valve | | 1 | |

| Pos | Part Number | Name | Remarks | Qty | Model |
|---|---|---|---|---|---|
| 20 | 810 201 186 A | bleeder valve | | 1 | |
| 21 | 111 971 911 A | rubber sleeve | | 1 | |
| - | N 020 378 1 | hose<br>10 X 2,5 | | * | |
| 22 | - | 270 MM | | 1 | |
| - | N 020 362 1 | hose<br>15 X 2,5 | | * | |
| 23 | - | 80 MM | -83 | 1 | |
| 23 | 999 181 354 40 | hose | 84- | 1 | |
| - | N 020 379 1 | hose<br>6 X 2,5 | | * | |
| 24 | - | 285 MM | -83 | 1 | |
| (24) | 944 201 453 01 | hose | 84- | 1 | |
| 25 | N 024 125 2 | hose clamp<br>A 9 X 19 | | 3 | |
| 25A | N 023 565 3 | hose clamp<br>A 9 X 21 | | 1 | |
| 26 | N 024 528 1 | clip<br>LC 8-12 | -83 | 2 | |
| 26A | 999 512 160 02 | hose clamp<br>9 X 13 | 84- | 1 | |
| 27 | N 023 570 2 | hose clamp<br>A 9 X 15 | | 5 | |
| 28 | N 023 569 2 | hose clamp<br>AR 9 X 16 | | 2 | |
| 28A | 999 512 198 02 | hose clamp<br>9 X 17 | 84- | 1 | |
| 29 | 944 201 061 01 | fuel tank cap<br>without lock cylinder | | 1 | |
| 30 | 944 201 553 00 | gasket | | 1 | |
| 31 | 477 201 594 | lock cylinder<br>with keys<br>w/o stipulated lock number | | 1 | |
| 31 | 477 201 594 A | lock cylinder<br>with 1 key<br>with stipulated lock-no. | | 1 | |
| 32 | 944 201 041 00 | expansion tank | -83 | 1 | |
| 32A | 944 201 041 03 | expansion tank | 84- | 1 | |
| 33 | 944 201 047 03 | cover | | 1 | |
| - | 000 043 202 08 | packing cord | | * | |
| 34 | - | $ 4 MM | | 1 | |
| 36 | N 013 957 5 | tapping screw<br>B 3,5 X 9,5 | | 5 | |
| 37 | 900 151 028 02 | washer<br>4,3 | | 3 | |
| 38 | N 011 005 14 | hexagon nut<br>M 5 | | 2 | |
| 39 | 900 025 003 02 | washer<br>A 5,3 | | 2 | |
| 40 | 481 201 647 | intermediate piece | | 2 | |
| 40A | 944 201 647 00 | intermediate piece | | 2 | |
| 41 | 477 201 295 B | intermediate layer | | 4 | |
| 42 | 477 201 295 B | intermediate layer | | 2 | |
| 43 | 477 863 160 | gasket | | 1 | |
| 43 | 477 863 160 A | gasket | 83- | 1 | (AUS) |
| 44 | 477 863 162 A | sound absorber | | 1 | |
| 45 | 477 201 302 | restraining strap | /R | 1 | |
| (45) | 937 201 302 00 | restraining strap | /R | 1 | TURBO |
| 46 | 477 201 311 B | restraining strap | /L | 1 | |
| 47 | 477 201 395 | restraining strap | /L | 1 | |
| 48 | 311 101 463 | hexagon nut<br>M 8 | | 2 | |
| 49 | N 010 335 5 | hexagon-head bolt<br>M 8 X 35 | | 1 | |

| Pos | Part Number | Name | Remarks | Qty | Model | Pos | Part Number | Name | Remarks | Qty | Model |
|---|---|---|---|---|---|---|---|---|---|---|---|
| 50 | 900 910 022 09 | lock nut<br>M 8 | | 1 | | | | | | | |
| 51 | N 011 525 13 | washer<br>A 8,4 | | 1 | | | | | | | |
| - | 000 043 205 05 | sound absorber | | * | | | | | | | |
| 52 | - | 100 MM | | 1 | | | | | | | |
| - | 999 181 046 40 | insulating hose | | * | | | | | | | |
| 53 | - | 60 MM | | 1 | | | | | | | |
| 54 | 931 201 359 02 | flap | | 1 | | | | | | | |
| 55 | N 043 864 1 | screw<br>BM 3 X 6 | 84- | 1 | | | | | | | |
| | | - -- E N D -- - | | | | | | | | | |

| Model | Year | MG | SG | Illustration | Restrictions | Update | 9:56 | 16.08.2004 | PORSCHE | PET | PORSCHE |
|---|---|---|---|---|---|---|---|---|---|---|---|
| 924 | 85 | 2 | 01 | 201-05 | | 179 | | | | | |

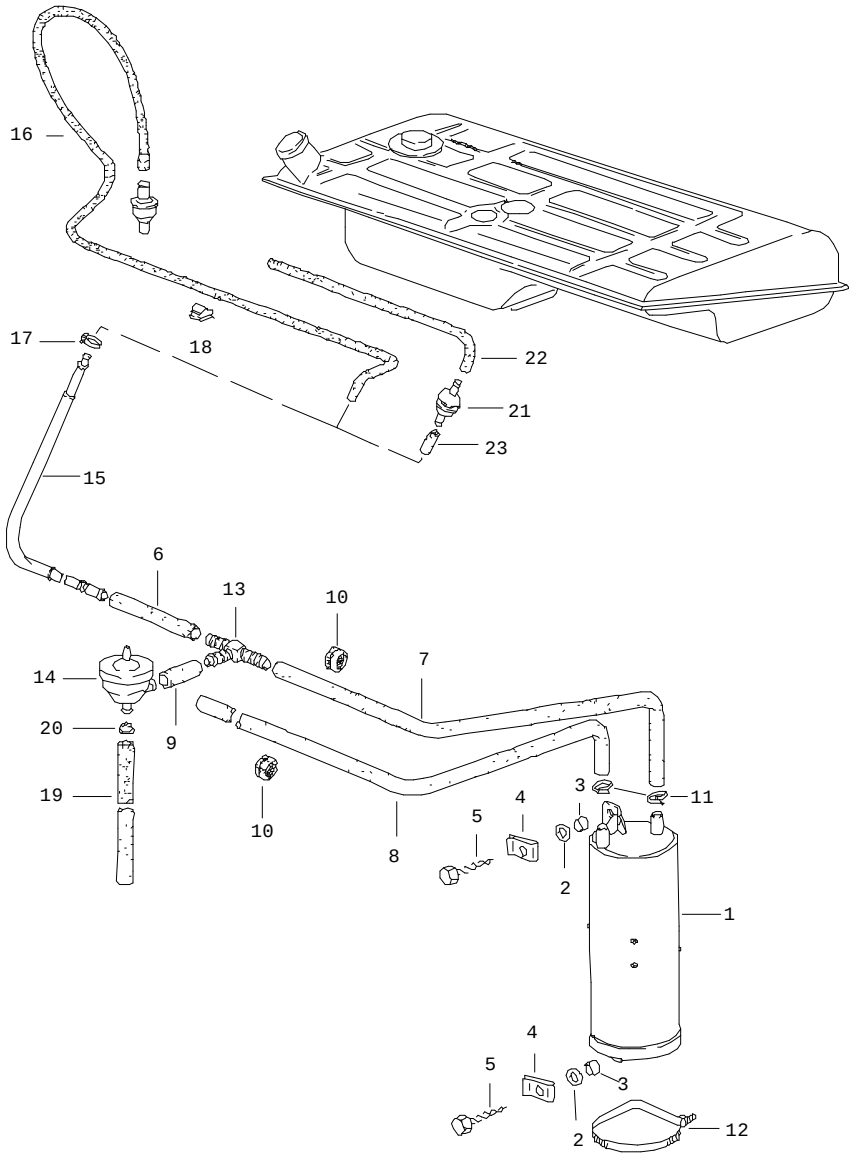


| Pos | Part Number | Name | Remarks | Qty | Model |
|---|---|---|---|---|---|
| | | carbon canister | | | |
| | | tank ventilation (USA) (CDN) (J) (AUS) | | | |
| 1 | 993 201 221 01 | carbon canister | | 1 | |
| 2 | 900 151 029 02 | washer 6,1 | | 2 | |
| 3 | 477 201 279 | sleeve | | 2 | |
| 4 | N 015 433 1 | speed nut B 6,3 | | 2 | |
| 5 | N 013 891 1 | tapping screw B 6,3 X 19 | | 2 | |
| - | 999 181 716 50 | hose 9,5 X 15,5 | | * | |
| 6 | - | 150 MM | | 1 | |
| - | N 020 374 1 | hose 12 X 3,3 | | * | |
| 7 | - | 460 MM | | 1 | |
| 8 | - | 850 MM | | 1 | 924 |
| (8) | - | 1090 MM | | 1 | TURBO |
| 9 | - | 40 MM | | 1 | |
| 10 | 021 119 569 A | rubber sleeve | | 2 | |
| 11 | 999 512 265 02 | hose clamp | | 2 | |
| 12 | N 020 906 3 | tie-wrap 6,5 X 450 | | 1 | |
| 13 | 477 201 767 B | t-piece | | 1 | |
| 14 | 928 110 429 03 | vacuum valve | -80 | 1 | |
| 14 | 928 110 429 06 | vacuum valve | 81- | 1 | |
| 15 | 477 201 743 D | pipeline | -80 | 1 | |
| (15) | 477 201 743 C | pipeline | 81 | 1 | |
| 15 | 477 201 743 D | pipeline | 82- | 1 | |
| 16 | 477 201 159 C | breather hose | -81 | 1 | |

| Pos | Part Number | Name | Remarks | Qty | Model |
|---|---|---|---|---|---|
| 16 | 944 201 159 01 | breather hose | 82- | 1 | |
| 17 | N 023 558 1 | hose clamp<br>A 9 X 10 | | 1 | |
| 18 | 477 971 939 | cable terminal | | 4 | |
| - | 999 239 016 40 | hose<br>13 X 18 | | * | |
| 19 | - | 1060 MM | | 1 | |
| 20 | E 928 110 523 01 | restrictor | -80 | 1 | |
| 21 | 810 201 186 A | bleeder valve | 81 | 1 | |
| 22 | E 477 201 189 | breather hose | 81 | 1 | |
| - | N 020 359 1 | hose<br>15 X 2,5 | 81 | * | |
| 23 | - | 80 MM | | 1 | |
| | | - -- E N D -- - | | | |

| Pos | Part Number | Name | Remarks | Qty | Model |
|---|---|---|---|---|---|

| Model | Year | MG | SG | Illustration | Restrictions | Update | 9:57 | 16.08.2004 | PORSCHE | PET | PORSCHE |
|---|---|---|---|---|---|---|---|---|---|---|---|
| 924 | 85 | 2 | 01 | 201-15 | | 179 | | | | | |

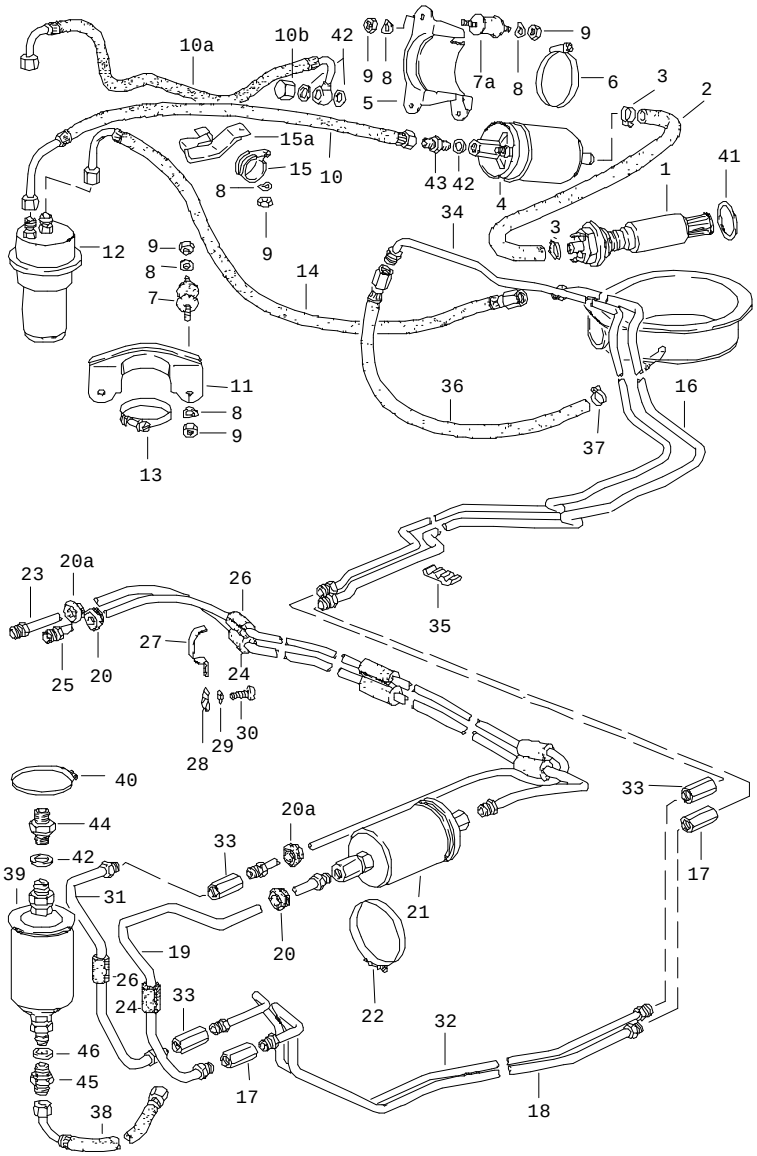


| Pos | Part Number | Name | Remarks | Qty | Model |
|---|---|---|---|---|---|
| | | fuel system | | | |
| 1 | 928 608 013 00 | in-tank fuel pump | | 1 | |
| 2 | 477 209 199 D | fuel hose | | 1 | |
| (2) | 477 209 191 | fuel hose | 81- | 1 | TURBO/GT |
| 3 | N 023 526 2 | hose clamp<br>A 9 X 18 | | 2 | |
| 4 | 911 608 102 00 | fuel pump | 80 | 1 | |
| (4) | 911 608 102 02 | fuel pump | 81- | 1 | |
| 5 | E 477 209 295 A | support | | 1 | |
| 6 | 999 512 394 00 | hose clamp | | 1 | |
| 7 | 944 610 115 00 | bonded rubber mounting | | 2 | |
| 7A | 944 610 115 00 | bonded rubber mounting | | 3 | |
| 8 | N 012 226 5 | spring washer<br>B 6 | | 10 | |
| 9 | 900 076 010 02 | hexagon nut<br>M 6 | | 10 | |
| 10 | 477 209 093 A | fuel hose | | 1 | |
| 10A | 477 209 093 C | fuel hose | 81- | 1 | |
| 10A | 477 209 093 E | fuel hose | 82- | 1 | |
| 10B | N 011 069 1 | cap nut<br>M 12 X 1,5 | 81- | 1 | |
| 11 | E 477 209 291 | support | | 1 | |
| 12 | 931 110 140 00 | pressure accumulator<br>40 CCM | | 1 | |
| 13 | 999 512 199 02 | clip | | 1 | |
| 14 | 477 209 047 B | fuel hose | | 1 | |
| 15 | N 020 690 1 | hose clamp | | 1 | |
| 15A | 944 356 593 01 | support | 83- | 1 | |
| 16 | 477 209 178 A | fuel line | | 1 | |
| 17 | 477 209 169 | connecting piece | | 2 | |

| Pos | Part Number | Name | Remarks | Qty | Model |
|---|---|---|---|---|---|
| 18 | 477 209 177 A | fuel line | | 1 | |
| 19 | 477 209 033 A | fuel line | /LL | 1 | TURBO/GT |
| (19) | 478 209 033 A | fuel line | /RL | 1 | TURBO/GT |
| 20 | 999 702 087 50 | rubber sleeve | | 2 | TURBO/GT |
| 20A | 999 702 120 50 | rubber sleeve | | 2 | TURBO/GT |
| 21 | 931 110 149 04 | fuel filter | | 1 | TURBO/GT |
| 22 | N 024 316 1 | hose clamp<br>12 X 35 | | 1 | TURBO/GT |
| 23 | 477 209 057 | fuel line | /LL | 1 | TURBO/GT |
| (23) | 478 209 057 A | fuel line | /RL | 1 | TURBO/GT |
| (23) | 478 209 055 | fuel line | /RL | 1 | TURBO/GT |
| 24 | 477 209 303 | hose piece | | 4 | TURBO/GT |
| 25 | 477 209 059 A | fuel line<br>return | /LL | 1 | TURBO/GT |
| (25) | 478 209 059 A | return | /RL | 1 | TURBO/GT |
| 26 | 477 209 305 | hose piece | | 4 | TURBO/GT |
| 27 | 477 209 307 | clip | | 3 | TURBO/GT |
| 28 | N 015 458 1 | speed nut<br>B 4,8 X 20 | | 3 | TURBO/GT<br>TURBO/GT |
| 29 | 900 025 003 02 | washer<br>A 5,3 | | 3 | TURBO/GT |
| 30 | N 013 975 6 | tapping screw<br>B 4,8 X 19 | | 3 | TURBO/GT |
| 31 | 477 209 035 A | fuel line<br>return | | 1 | TURBO/GT |
| 32 | 477 209 175 | fuel line<br>return | | 1 | |
| 33 | 477 209 161 | connecting piece | | 3 | |
| 34 | 477 209 176 A | fuel line<br>return | | 1 | |
| 35 | 911 356 543 01 | support | | 13 | |
| (35) | 944 356 591 00 | support | 82- | 12 | |
| 36 | 477 209 071 C | fuel hose | | 1 | |
| (36) E | 477 209 071 D | fuel hose | 81- | 1 | TURBO/GT |
| 37 | N 023 577 2 | hose clamp | | 1 | |
| 38 | 477 209 047 A | fuel hose | | 1 | 924 |
| 39 * | 930 110 076 00 | fuel filter | | 1 | 924 |
| 40 | 111 501 159 B | hose clamp<br>9 X 56 | | 1 | 924 |
| 41 | 928 201 187 02 | sealing ring | | 1 | |
| 42 | N 013 812 3 | sealing ring<br>A 12 X 15,5 | | 2 | |
| 43 | N 020 704 2 | connection piece | 80 | X | |
| (43) | 911 608 951 00 | check valve<br>for<br>fuel pump<br>long neck | 80 | X | |
| (43) | 893 906 093 | retaining valve<br>for<br>fuel pump<br>short neck | 81- | 1 | |
| 44 | 930 110 199 00 | screw socket | | 1 | 924 |
| 45 | 930 110 198 00 | screw socket | | 1 | 924 |
| 46 | 900 123 007 30 | sealing ring<br>A 14 X 18 | | 1 | 924 |

- -- E N D -- -

| Model | Year | MG | SG | Illustration | Restrictions | Update | 9:57 | 16.08.2004 | PORSCHE | PET | PORSCHE |
|---|---|---|---|---|---|---|---|---|---|---|---|
| 924 | 85 | 2 | 02 | 202-00 | | 179 | | | | | |

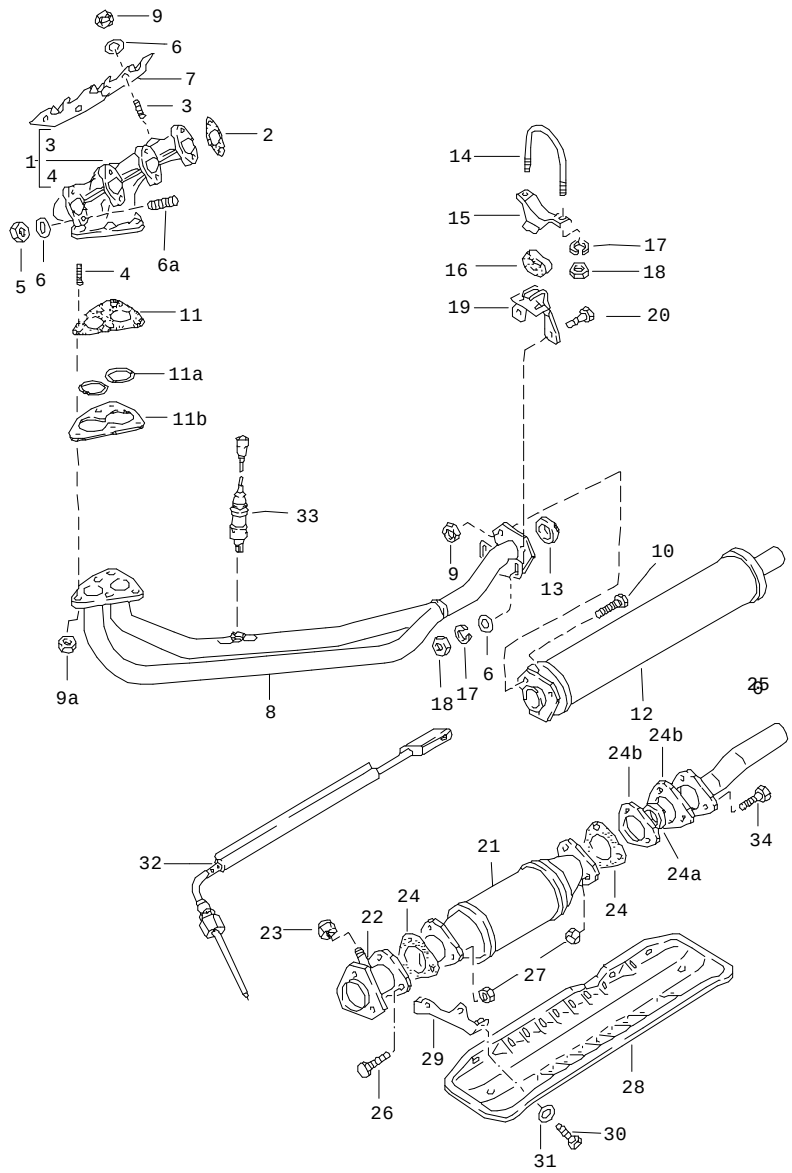


| Pos | Part Number | Name | Remarks | Qty | Model |
|---|---|---|---|---|---|
| | | exhaust system<br>front muffler | | | 924 |
| 1 | 048 129 587 D | exhaust manifold | /LL | 1 | |
| (1) | 047 129 587 B | exhaust manifold | /RL | 1 | |
| 2 | * 048 129 589 A | gasket | | 4 | |
| 3 | N 044 511 1 | stud<br>M 8 X 18 | | 3 | |
| 4 | E N 044 514 4 | stud<br>M 8 X 25 | | 5 | |
| 5 | N 900 850 01 | hexagon nut<br>M 8 | | 8 | |
| 6 | N 011 525 13 | washer<br>A 8,4 | | 11 | |
| 6A | N 044 411 5 | stud<br>M 8 X 30 | | 8 | |
| 7 | 047 129 595 D | cover plate | /LL | 1 | |
| (7) | 047 129 595 E | cover plate | /RL | 1 | |
| (8) | 477 253 101 Q | exhaust pipe | /LL | 1 | |
| (8) | 478 253 101 D | exhaust pipe | /RL | 1 | |
| 9 | 803 253 111 | lock nut<br>M 8 | | 6 | |
| 9A | 311 101 463 | hexagon nut<br>M 8 | | 5 | |
| 10 | N 010 353 3 | hexagon-head bolt<br>M 8 X 42 | | 3 | |
| 11 | 477 253 115 E | gasket | /LL | 1 | |
| (11) | 478 253 115 D | gasket | /RL | 1 | |
| 12 | 477 253 121 B | front muffler | | 1 | |
| 13 | 477 253 137 | sealing ring | | 1 | |
| 14 | 477 253 139 | clip | | 1 | |
| 15 | 944 111 307 00 | support | | 1 | |
| 16 | 477 253 140 A | rubber mounting | | 1 | |

| Pos | Part Number | Name | Remarks | Qty | Model | Pos | Part Number | Name | Remarks | Qty | Model |
|---|---|---|---|---|---|---|---|---|---|---|---|
| 17 | 900 027 015 02 | lock ring<br>B 8 | | 2 | | | | | | | |
| 18 | N 011 008 8 | hexagon nut<br>M 8 | | 2 | | | | | | | |
| 19 | 477 253 245 | hook | | 1 | | | | | | | |
| 20 | N 010 240 16 | hexagon-head bolt<br>M 8 X 20 | | 2 | | | | | | | |
| | | cover plate<br>see group<br>8/01/05 | | | | | | | | | |
| | | - -- E N D -- - | | | | | | | | | |

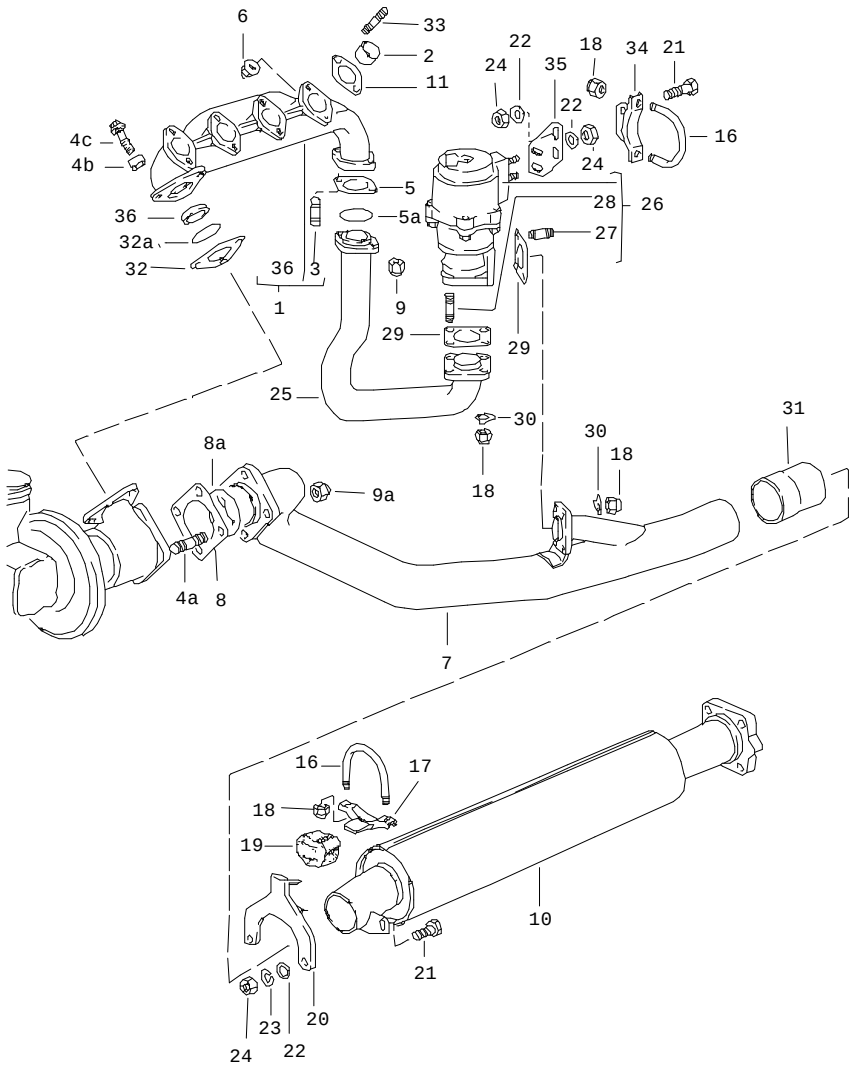


| Pos | Part Number | Name | Remarks | Qty | Model |
|---|---|---|---|---|---|
| | | exhaust system<br>front muffler | | | TURBO/GT |
| | | see technical information<br>GR.2 NR 10/10A | | | |
| 1 | A 931 111 094 02 | exhaust manifold | /RL 80 | 1 | M31.01 |
| 1 | 931 111 096 00 | exhaust manifold | /LL | 1 | |
| 1 | 931 111 094 02 | exhaust manifold | /RL | 1 | |
| 2 | 931 111 132 00 | intermediate piece | | 4 | |
| 3 | 900 081 051 02 | stud<br>M 10 X 35 | 80 | 2 | M31.01 |
| 3 | 999 060 033 00 | stud<br>M 10 X 35 | 81- | 2 | M31.03/50 |
| 4 | 900 081 053 00 | stud<br>M 10 X 25 | | 3 | |
| 4A | 900 081 050 02 | stud<br>M 10 X 28 | | 4 | |
| 4B | E 931 123 199 00 | sleeve | | 3 | |
| 4C | 931 123 197 00 | shouldered bolt | | 3 | |
| 5 | * 931 111 191 10 | gasket | | 1 | |
| 5A | * 993 111 195 00 | sealing ring | | 1 | |
| 6 | 999 084 611 02 | lock nut<br>M 8 | | 8 | |
| 7 | 931 111 905 00 | exhaust pipe | | 1 | |
| 8 | 931 111 192 02 | gasket | | 1 | |
| 8A | * 944 111 205 02 | gasket | | 1 | |
| 9 | 900 157 007 00 | hexagon nut<br>M 10 | | 5 | |
| 9A | N 900 730 01 | lock nut<br>M 10 | | 4 | |
| 10 | 931 111 901 00 | front muffler | | 1 | TURBO |
| (10) | 931 111 901 01 | front muffler | 81 | 1 | GT |
| 11 | * 930 111 191 01 | gasket | | 4 | |

| Pos | Part Number | Name | Remarks | Qty | Model |
|---|---|---|---|---|---|
| 16 | 477 253 139 | clip | | 2 | |
| 17 | 944 111 307 00 | support | | 1 | TURBO |
| 18 | 900 910 097 02 | lock nut<br>VM 8 | | 12 | |
| 19 | 477 253 140 A | rubber mounting | | 1 | TURBO |
| 20 | 931 111 061 02 | hook | | 1 | TURBO |
| 21 | N 010 240 16 | hexagon-head bolt<br>M 8 X 20 | | 4 | |
| 22 | 900 025 007 02 | washer<br>A 8,4 | | 4 | |
| 23 | 900 027 015 02 | lock ring<br>B 8 | | 2 | |
| 24 | 900 076 025 02 | hexagon nut<br>M 8 | | 4 | |
| 25 | 931 123 033 04 | wastegate line | | 1 | |
| 26 | 930 123 060 10 | wastegate | 80 | 1 | M31.01 |
| 26 | 931 123 066 07 | wastegate | 81- | 1 | M31.03 |
| 26 | 931 123 066 01 | wastegate | 81 | 1 | M31.50 |
| 27 | 900 081 048 02 | stud<br>M 8 X 25 | | 4 | |
| 28 | 900 081 049 02 | stud<br>M 8 X 32 | | 4 | |
| 29 | * 930 123 194 01 | gasket | | 2 | |
| 30 | 999 039 001 00 | tab washer | | 8 | |
| 31 | 931 111 902 00 | sleeve | | 1 | |
| 32 | * 931 123 193 02 | gasket | | 1 | |
| 32A | * 993 111 195 00 | sealing ring | | 1 | |
| 33 | 999 062 238 02 | stud<br>M 8 X 25 | | 8 | |
| 34 | 931 123 143 01 | support | | 1 | |
| 35 | E 931 123 145 02 | retaining bracket | | 1 | |
| 36 | 931 111 599 01 | intermediate ring | | 1 | |
| - | E 000 043 023 00 | set of fastening parts<br>for<br>wastegate<br>exhaust pipe | | 1 | |
| | | cover plate<br>see group<br>8/01/05 | | | |
| | | - -- E N D -- - | | | |

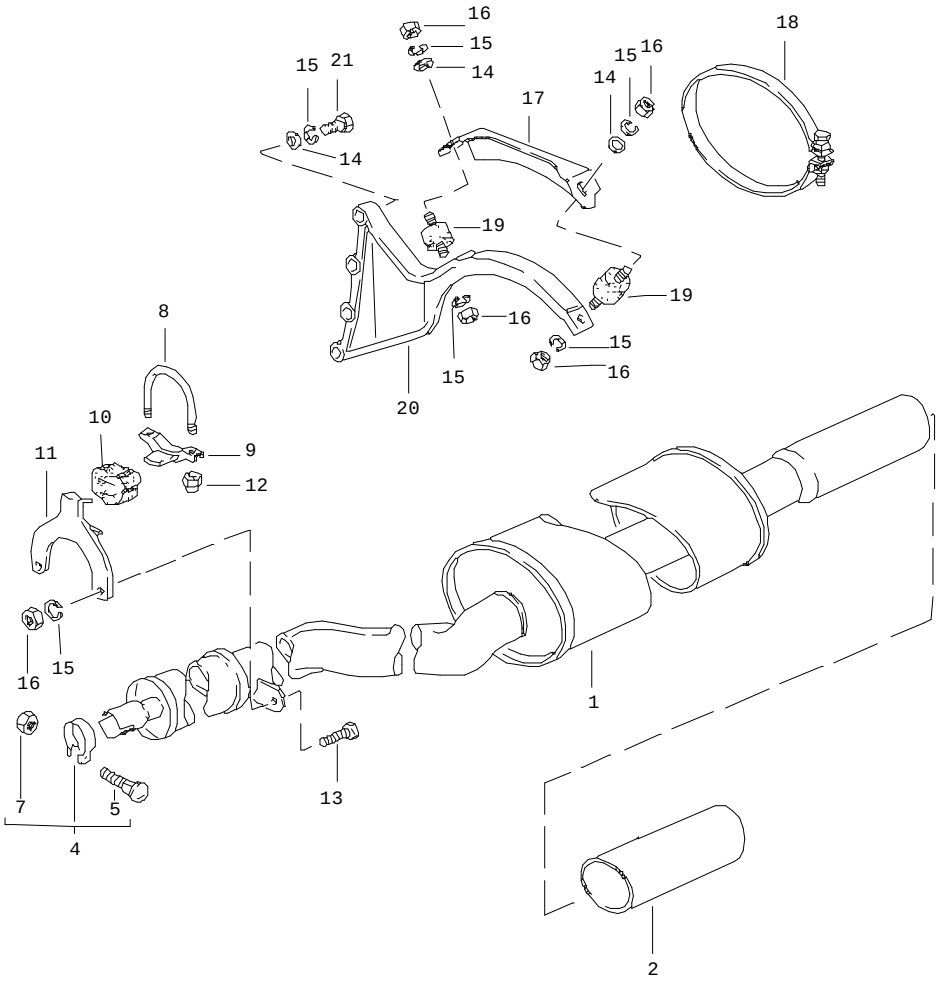


| Pos | Part Number | Name | Remarks | Qty | Model |
|---|---|---|---|---|---|
| | | exhaust system<br>rear muffler | | | 924 |
| 1 | 477 253 125 S | rear muffler | | 1 | |
| (1) | 477 253 125 AA | rear muffler | | 1 | (S) |
| 2 | 477 253 191 C | ornamental exhaust pipe<br>chrome | | 1 | |
| (2) | 477 253 191 B | ornamental exhaust pipe<br>black | | 1 | (S) |
| 4 | A 191 253 139 G | clip | | 1 | |
| 4 | 191 253 139 G | clip | | 1 | |
| 5 | N 902 064 01 | round head screw<br>M 10 X 50 | | 1 | |
| 7 | N 011 010 6 | hexagon nut<br>M 10 | | 1 | |
| 8 | 477 253 139 | clip | | 1 | |
| 9 | 944 111 307 00 | support | | 1 | |
| 10 | 477 253 140 A | rubber mounting | | 1 | |
| 11 | 477 253 245 | hook | | 1 | |
| 12 | 900 910 097 02 | lock nut<br>VM 8 | | 2 | |
| 13 | N 010 240 16 | hexagon-head bolt<br>M 8 X 20 | | 2 | |
| 14 | N 011 525 13 | washer<br>A 8,4 | | 6 | |
| 15 | 900 027 015 02 | lock ring<br>B 8 | | 6 | |
| 16 | N 011 008 8 | hexagon nut<br>M 8 | | 6 | |
| 17 | 477 253 253 D | retaining bracket | | 1 | |
| 18 | 477 253 325 A | clip | | 1 | |
| 19 | 477 253 149 C | bonded rubber buffer | | 2 | |

| Pos | Part Number | Name | Remarks | Qty | Model | Pos | Part Number | Name | Remarks | Qty | Model |
|---|---|---|---|---|---|---|---|---|---|---|---|
| (19) | 999 703 317 00 | bonded rubber buffer<br>with<br>trailer coupling | | 2 | | | | | | | |
| 20 | 477 253 243 | support | | 1 | | | | | | | |
| (20) | 477 253 255 C | support | AUT. | 1 | | | | | | | |
| 21 | N 010 369 2 | hexagon-head bolt<br>M 8 X 58 | | 4 | | | | | | | |
| | | cover plate<br>see group<br>8/01/05 | | | | | | | | | |
| | | - -- E N D -- - | | | | | | | | | |

| Model | Year | MG | SG | Illustration | Restrictions | Update | | | | |
|---|---|---|---|---|---|---|---|---|---|---|
| 924 | 85 | 2 | 02 | 202-20 | | 179 | 9:57 | 16.08.2004 | PORSCHE | PET | PORSCHE |

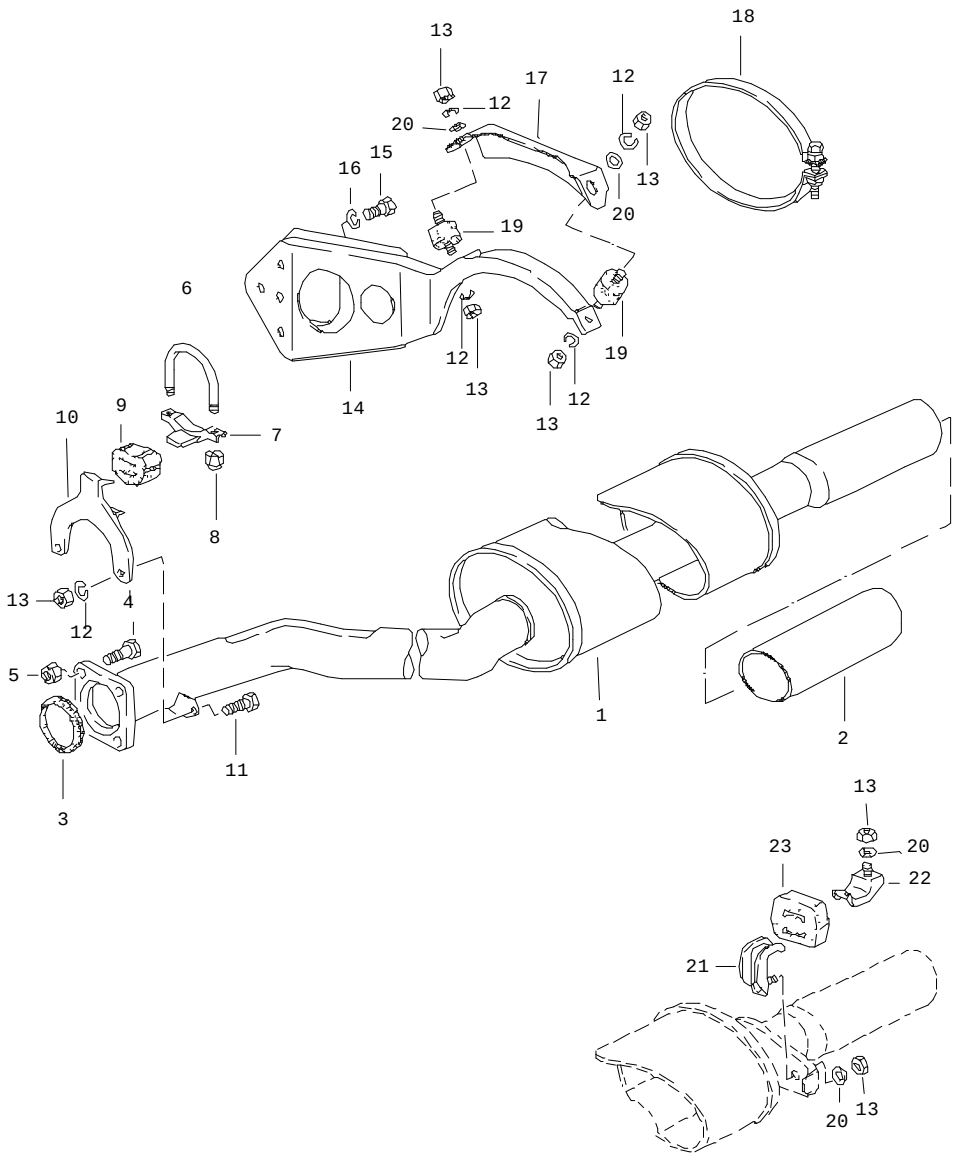


| Pos | Part Number | Name | Remarks | Qty | Model |
|---|---|---|---|---|---|
| | | exhaust system<br>rear muffler | | | TURBO/GT |
| 1 | 931 111 050 06 | rear muffler | | 1 | TURBO |
| (1) | 931 111 050 05 | rear muffler | | 1 | TURBO (S) |
| (1) E | 931 111 050 07 | rear muffler | 81 | 1 | GT |
| 2 | 477 253 191 C | ornamental exhaust pipe<br>chrome | | 1 | |
| 3 | * 928 111 244 03 | sealing ring | | 1 | |
| 4 | N 010 020 2 | hexagon-head bolt<br>M 10 X 38 | | 4 | |
| 5 | 999 084 047 02 | lock nut<br>M 10 | | 4 | |
| 6 | 477 253 139 | clip | | 1 | |
| 7 | 944 111 307 00 | support | | 1 | |
| 8 | 900 910 097 02 | lock nut<br>VM 8 | | 2 | |
| 9 | 477 253 140 A | rubber mounting | | 1 | |
| 10 | 931 111 061 02 | hook | | 1 | |
| 11 | N 010 240 16 | hexagon-head bolt<br>M 8 X 20 | | 2 | |
| 12 | 900 027 015 02 | lock ring<br>B 8 | | 6 | |
| 13 | 900 076 025 02 | hexagon nut<br>M 8 | | 6 | |
| 14 | 477 253 251 | support | | 1 | TURBO |
| 15 | N 010 253 7 | hexagon-head bolt<br>M 10 X 22 | | 3 | |
| 16 | 900 027 016 02 | lock ring<br>B 10 | | 3 | |
| 17 | 477 253 253 D | retaining bracket | | 1 | TURBO |
| 18 | 477 253 325 A | clip | | 1 | TURBO |
| 19 | 477 253 149 C | bonded rubber buffer | | 2 | TURBO |

| Pos | Part Number | Name | Remarks | Qty | Model |
|---|---|---|---|---|---|
| (19) | 999 703 317 00 | bonded rubber buffer<br>with<br>trailer coupling | | 2 | |
| 20 | 900 025 007 02 | washer<br>8,4 | | 2 | |
| 21 | 931 111 264 01 | hook | 81 | 2 | GT |
| 22 | 931 111 121 01 | hook | 81 | 2 | GT |
| 23 | 928 111 259 02 | rubber mounting | 81 | 2 | GT |
| | | cover plate<br>see group<br>8/01/05 | | | |
| | | - -- E N D -- - | | | |

| Pos | Part Number | Name | Remarks | Qty | Model |
|---|---|---|---|---|---|

| Model | Year | MG | SG | Illustration | Restrictions | Update | 9:57 | 16.08.2004 | PORSCHE | PET | PORSCHE |
|---|---|---|---|---|---|---|---|---|---|---|---|
| 924 | 85 | 2 | 02 | 202-25 | | 179 | | | | | |

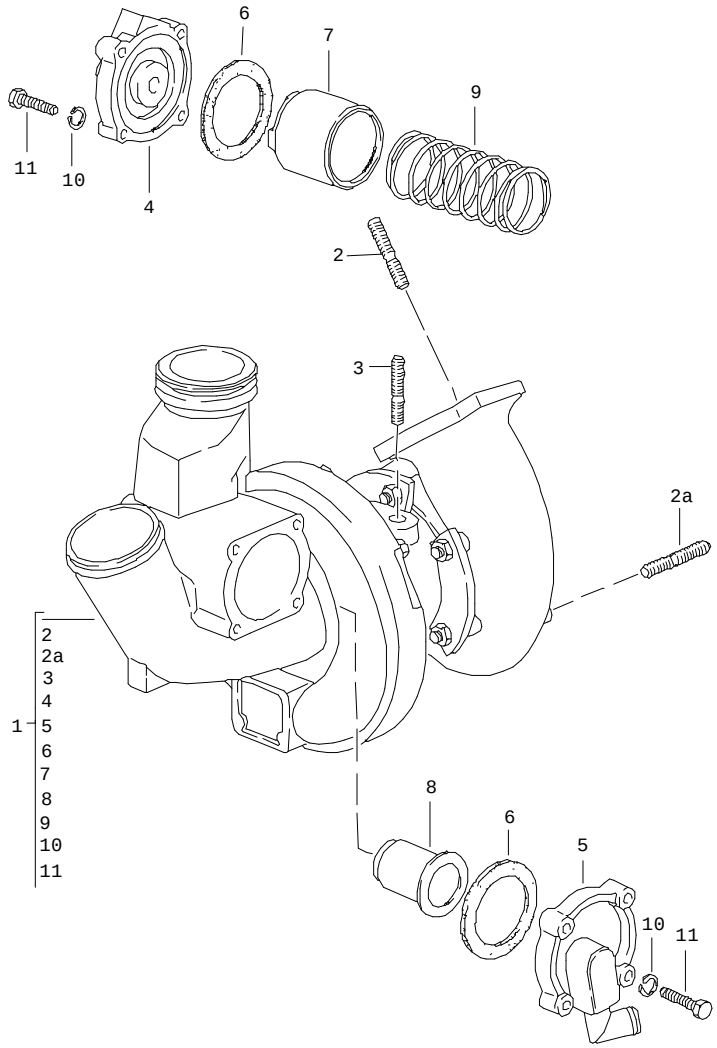


| Pos | Part Number | Name | Remarks | Qty | Model |
|---|---|---|---|---|---|
| | | turbocharger | | | TURBO/GT |
| 1 | > 931 123 002 09 | turbocharger | 80 | 1 | M31.01 |
| 1 | > 931 123 004 07 | turbocharger | 81- | 1 | M31.03/04 |
| 1 | E 931 123 002 10 | turbocharger | 81 | 1 | M31.50 |
| 2 | 900 081 053 00 | stud<br>M 10 X 25 | 80 | 2 | M31.01/02 |
| 2A | 900 081 050 02 | stud<br>M 10 X 28 | | 4 | |
| 3 | 900 081 044 08 | stud<br>M 8 X 35 | | 2 | |
| 4 | 930 110 156 06 | cover | | 1 | |
| 5 | 931 110 056 00 | cover | | 1 | |
| 6 | 930 110 149 00 | gasket | | 2 | |
| 7 | 931 123 149 00 | piston | | 1 | |
| 8 | 931 123 147 02 | spring guide | | 1 | |
| 9 | 931 123 151 01 | compression spring | | 1 | |
| 10 | N 012 006 4 | lock ring<br>B 6 | | 8 | |
| 11 | N 010 220 3 | hexagon-head bolt<br>M 6 X 30 | | 8 | |
| | | - -- E N D -- - | | | |

| Model | Year | MG | SG | Illustration | Restrictions | Update | | |
|---|---|---|---|---|---|---|---|---|
| 924 | 85 | 2 | 98 | REP | | 179 | 10:42 | 16.08.2004 |

| Pos | Part Number | Name | Remarks | Qty | Model |
|---|---|---|---|---|---|
| | | repair kits | | | |
| >> | > 931 123 901 00 | set of seals for turbocharger without mounting parts comprising: | | 1 | TURBO/GT |
| - | 900 123 106 30 | sealing ring | | 4 | |
| - | N 043 815 2 | sealing ring | | 1 | |
| - | 931 110 152 01 | gasket | | 1 | |
| - | 931 111 191 10 | gasket | | 1 | |
| - | 944 111 205 02 | gasket | | 1 | |
| - | 928 111 244 03 | sealing ring | | 1 | |
| - | 900 123 008 30 | sealing ring | | 3 | |
| - | 900 123 043 30 | sealing ring | | 3 | |
| - | 900 123 084 30 | sealing ring | | 1 | |
| - | 930 123 194 01 | gasket | | 2 | |
| - | 993 111 195 00 | sealing ring | | 2 | |
| - | 900 174 045 40 | sealing ring | | 1 | |
| - | 999 701 473 40 | round seal | | 1 | |
| - | 999 701 477 40 | round seal | | 1 | |
| - | 999 707 043 40 | o-ring | | 1 | |
| - | 999 701 621 40 | o-ring | | 1 | |
| >> | > 000 043 018 00 | installation set for turbocharger comprising: | | 1 | TURBO |
| | | set of seals with mounting parts | | 1 | |
| - | 931 123 901 00 | set of seals | | 1 | |
| - | 999 085 001 02 | socket head nut | | 2 | |
| - | N 900 730 01 | lock nut | | 4 | |
| - | 931 123 197 00 | shouldered bolt | | 3 | |
| - | E 931 123 199 00 | sleeve | | 3 | |
| - | 930 123 134 04 | gasket | | 1 | |

| Model | Year | MG | SG | Illustration | Restrictions | Update | | |
|---|---|---|---|---|---|---|---|---|
| 924 | 85 | 2 | 98 | REP | | 179 | 10:42 | 16.08.2004 |

| Pos | Part Number | Name | Remarks | Qty | Model |
|---|---|---|---|---|---|
| - | 900 074 233 02 | hexagon-head bolt<br>M 6 X 40 | | 2 | |
| - | 900 910 096 02 | lock nut<br>M 6 | | 2 | |
| - | N 010 020 2 | hexagon-head bolt<br>M 10 X 38 | | 4 | |
| - | 999 084 047 02 | lock nut<br>M 10 | | 4 | |
| - | 999 513 002 40 | tie-wrap | | 1 | |
| - | 931 110 185 01 | hose | | 1 | |
| - | 900 157 007 00 | hexagon nut | | 1 | |
| - | 900 910 097 02 | lock nut | | 4 | |
| - | 900 081 049 02 | stud | | 4 | |
| - | 931 111 599 01 | intermediate ring | | 1 | |
| - | 930 111 191 01 | gasket | | 4 | |
| - | 999 084 611 02 | lock nut | | 8 | |
| >> | > 477 298 113 | set of fastening parts<br>for<br>front muffler | | 1 | 924 |
| >> | > 477 298 113 C | set of fastening parts<br>for<br>rear muffler | | 1 | 924 |
| >> | > 477 298 113 D | set of fastening parts<br>for<br>front muffler<br>and<br>rear muffler | | 1 | 924 |
| >> | > 477 298 113 E | set of fastening parts<br>for<br>front muffler | | 1 | TURBO |
| >> | > 477 298 113 F | set of fastening parts<br>for<br>rear muffler | | 1 | TURBO |
| >> | > 477 298 113 G | set of fastening parts<br>for<br>front muffler<br>and<br>rear muffler | | 1 | TURBO |
| | | - -- E N D -- - | | | |

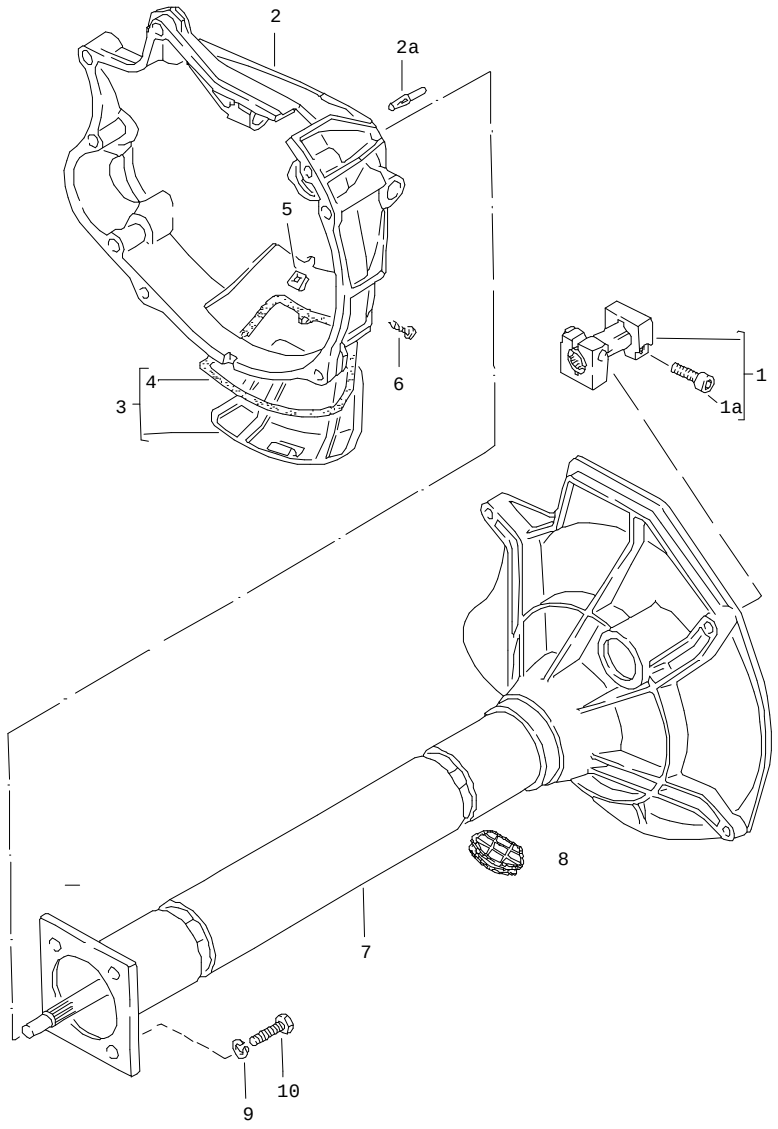


| Pos | Part Number | Name | Remarks | Qty | Model |
|---|---|---|---|---|---|
| | | central tube<br>manual transmission<br>VQ VR UV MD ME MF | | | 924 |
| 1 | 477 521 145 A | clamping sleeve | | 1 | |
| 1A | 477 521 501 A | pan-head screw | | 2 | |
| 2 | 477 521 211 B | clutch housing | | 1 | |
| 2A | N 012 690 1 | grooved pin<br>10 X 32 | | 3 | |
| 3 | 477 521 213 | cover | | 1 | |
| 4 | 477 521 214 | gasket | | 1 | |
| 5 | 999 591 327 02 | speed nut<br>B 6,3 X 23 | | 1 | |
| 6 | N 013 947 3 | oval-head screw<br>6,3 X 19 | | 1 | |
| 7 | > 477 521 230 B | central tube<br>ready for installation | | 1 | |
| 8 | 477 521 277 C | cap | | 1 | |
| 9 | 900 027 016 02 | lock ring<br>B 10 | | 4 | |
| 10 | N 010 275 4 | hexagon-head bolt<br>M 10 X 35 | | 4 | |
| | | - -- E N D -- - | | | |

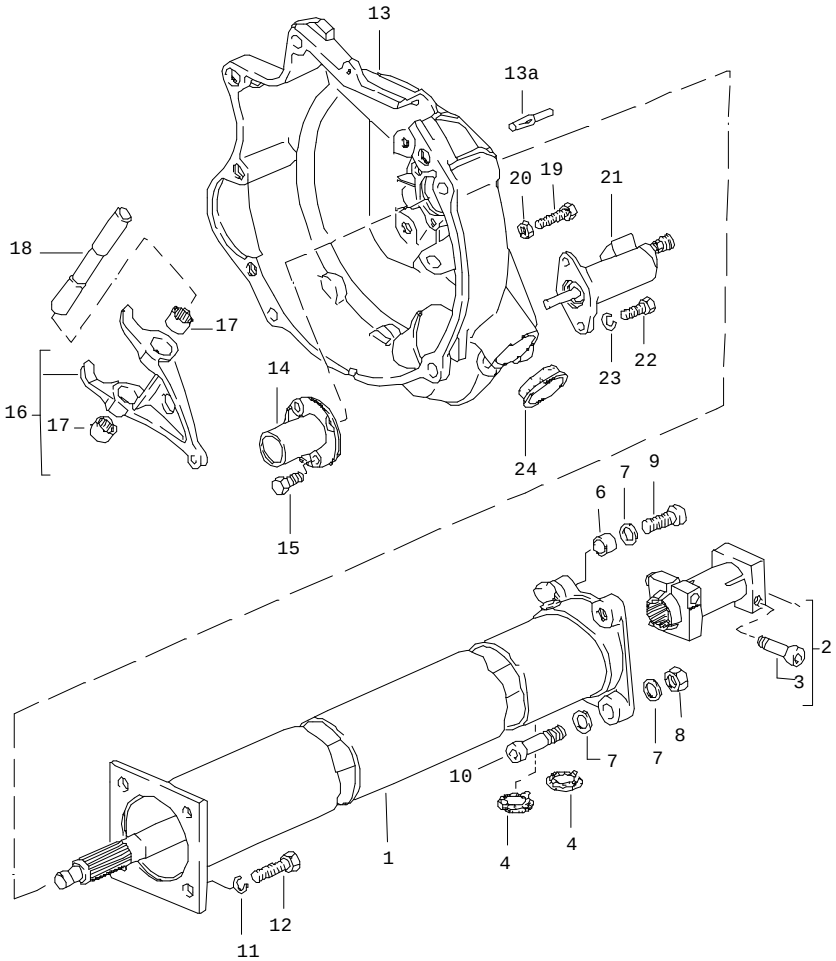


| Pos | Part Number | Name | Remarks | Qty | Model |
|---|---|---|---|---|---|
| | | central tube<br>manual transmission<br>G31.01/02/03 | | | TURBO/GT |
| 1 | > 931 421 012 01 | central tube<br>ready for installation | | 1 | |
| 2 | 922 421 051 02 | clamping sleeve | | 1 | |
| 3 | 931 421 240 00 | clamping screw | | 2 | |
| 4 | 477 521 278 | cap | | 2 | |
| 6 | 019 301 153 | dowel sleeve | | 2 | |
| 7 | N 011 564 2 | washer<br>13 | | 6 | |
| 8 | N 011 020 8 | hexagon nut<br>M 12 X 1,5 | | 2 | |
| 9 | E N 044 738 1 | pan-head screw<br>M 12 X 1,5 X 40 | | 2 | |
| 10 | N 044 757 1 | pan-head screw<br>M 12 X 1,5 X 55 | | 2 | |
| 11 | 900 027 016 02 | lock ring<br>B 10 | | 4 | |
| 12 | N 010 275 4 | hexagon-head bolt<br>M 10 X 35 | | 4 | |
| 13 | 931 116 043 02 | clutch housing | | 1 | |
| 13A | N 012 690 1 | grooved pin<br>10 X 32 | | 3 | |
| 14 | 016 141 181 | guide sleeve | | 1 | |
| 15 | N 090 194 2 | hexagon-head bolt<br>M 7 X 16 | | 3 | |
| 16 | 931 116 085 00 | clutch release lever | | 1 | |
| 17 | 999 201 213 00 | needle sleeve | | 2 | |
| 18 | 951 116 133 00 | operating shaft | | 1 | |
| 19 | N 010 221 3 | hexagon-head bolt<br>M 6 X 35 | | 1 | |
| 20 | 900 076 010 02 | hexagon nut<br>M 6 | | 1 | |

| Pos | Part Number | Name | Remarks | Qty | Model | Pos | Part Number | Name | Remarks | Qty | Model |
|---|---|---|---|---|---|---|---|---|---|---|---|
| 21 | 944 116 237 00 | clutch operating cylinder | | 1 | | | | | | | |
| - | * 928 116 901 00 | repair kit<br>clutch operating cylinder | | 1 | | | | | | | |
| 22 | N 010 233 6 | hexagon-head bolt<br>M 8 X 28 | | 2 | | | | | | | |
| 23 | N 012 038 1 | lock ring<br>B 8 | | 2 | | | | | | | |
| 24 | 931 116 177 00 | cap | | 1 | | | | | | | |
| | | - -- E N D -- - | | | | | | | | | |

| Model | Year | MG | SG | Illustration | Restrictions | Update | 9:58 | 16.08.2004 | PORSCHE PET PORSCHE |
|---|---|---|---|---|---|---|---|---|---|
| 924 | 85 | 3 | 01 | 301-15 | | 179 | | | |

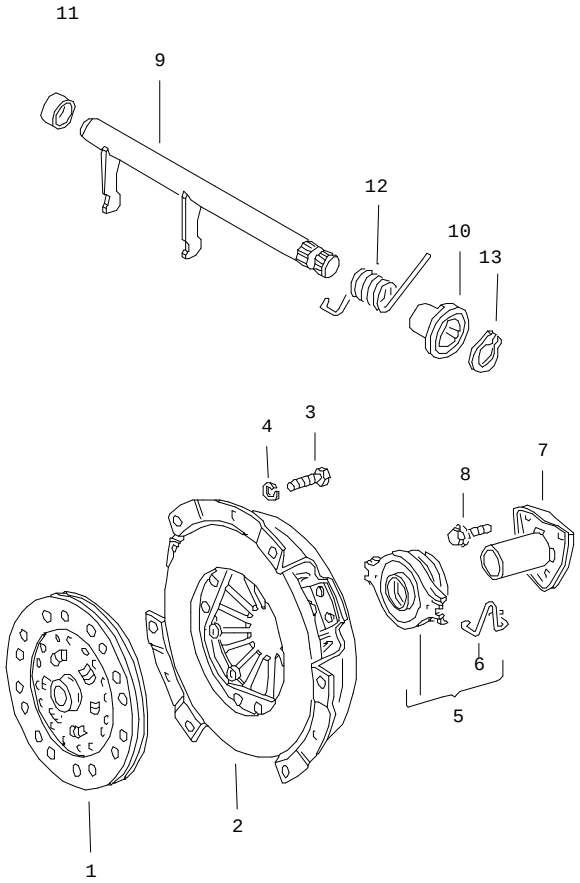


| Pos | Part Number | Name | Remarks | Qty | Model |
|---|---|---|---|---|---|
| | | clutch | | | 924 |
| 1 | 047 141 031 C | drive plate | | 1 | |
| 2 | > 035 141 117 E | clutch pressure plate | | 1 | |
| 3 | N 010 240 7 | hexagon-head bolt<br>M 8 X 20 | | 6 | |
| 4 | 900 027 015 02 | lock ring<br>B 8 | | 6 | |
| 5 | 113 141 165 B | clutch release bearing | | 1 | |
| 6 | 113 141 177 C | spring | /L | 1 | |
| (6) | 113 141 178 C | spring | /R | 1 | |
| 7 | 016 141 181 | guide sleeve | | 1 | |
| 8 | N 090 194 2 | hexagon-head bolt<br>M 7 X 16 | | 3 | |
| 9 | E 088 141 701 | operating shaft | | 1 | |
| 10 | E 092 141 699 | bush | | 1 | |
| 11 | 088 141 713 B | bush | | 1 | |
| 12 | 088 141 723 | torsion spring | | 1 | |
| 13 | N 012 640 1 | circlip | | 1 | |
| -- | 924 116 911 00 | repair kit<br>for<br>clutch | | 1 | |
| | | - -- E N D -- - | | | |

| Model | Year | MG | SG | Illustration | Restrictions | Update | | | |
|---|---|---|---|---|---|---|---|---|---|
| 924 | 85 | 3 | 01 | 301-20 | | 179 | 9:58 | 16.08.2004 | PORSCHE PET PORSCHE |

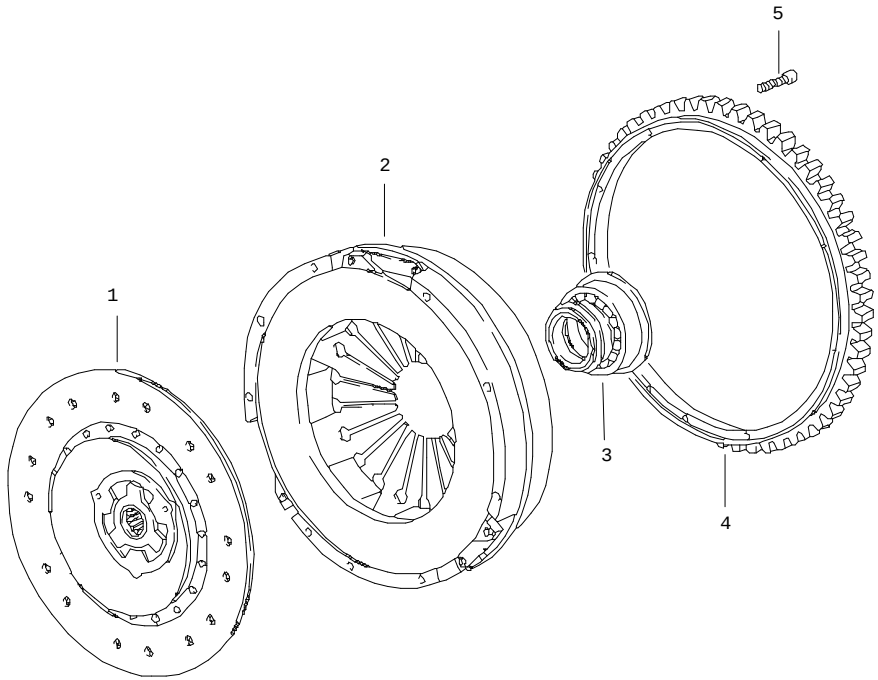


| Pos | Part Number | Name | Remarks | Qty | Model |
|---|---|---|---|---|---|
| | | clutch | | | TURBO/GT |
| 1 | > 931 116 011 04 | clutch plate<br>spring damped | | 1 | M31.01/02<br>M31.03/04/50 |
| 1 | 944 116 012 08 | clutch plate<br>rubber damped | 81- | 1 | M31.03 |
| 2 | > 931 116 001 02 | pressure plate<br>only together with<br>931.116.011.04 | | 1 | M31.01/02<br>M31.03/04 |
| 2 | > 915 116 001 27 | pressure plate<br>only together with<br>931.116.011.04 | 81 | 1 | M31.50 |
| 2 | 931 116 001 03 | pressure plate<br>only together with<br>944.116.012.08 | 81- | 1 | M31.03 |
| 3 | 931 116 082 04 | clutch release bearing | | 1 | |
| 4 | 944 116 239 03 | starter ring | | 1 | |
| 5 | 900 067 020 02 | pan-head screw<br>M 8 X 50 | | 9 | |
| | | - -- E N D -- - | | | |

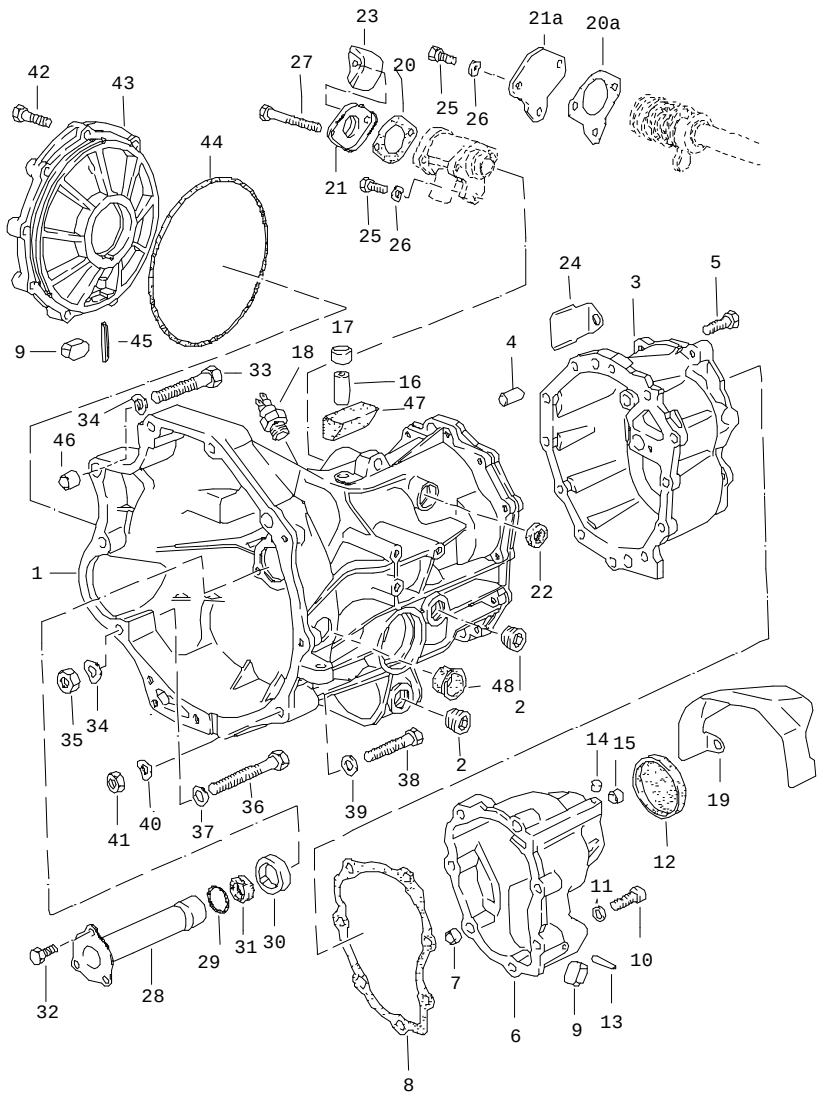


| Pos | Part Number | Name | Remarks | Qty | Model |
|---|---|---|---|---|---|
| | | replacement transmission<br>transmission case<br>manual transmission<br>VQ VR UV MD<br>ME MF MB MX<br>4Q 5Q 6Q | | | 924 |
| - | > 016 300 041 F | replacement transmission<br>ready for installation | 80 | 1 | VQ |
| - | E 016 300 043 K | replacement transmission<br>ready for installation | 81- | 1 | MD |
| - | E 016 300 045 L | replacement transmission<br>with<br>limited-slip differential<br>ready for installation | 82- | 1 | 4Q |
| 1 | 016 301 103 J | transmission case | 80 | 1 | VQ VR UV |
| 1 | 016 301 103 N | transmission case | 81- | 1 | MD MF ME |
| 2 | 111 301 127 E | screw plug<br>M 24 X 1,5 | | 2 | |
| 3 | 016 301 211 C | end plate<br>use also:<br>014.301.115.A<br>019.301.115 | 80 | 1 | VQ VR UV |
| 3 | 016 301 211 F | end plate<br>see tpi<br>GR. 3/1<br>use also:<br>2X 019.301.115 | 81- | 1 | MD MF ME |
| 4 | 014 301 473 | guide sleeve | | 2 | |
| 5 | N 010 332 4 | hexagon-head bolt<br>M 8 X 32 | | 8 | |
| 5 | N 010 369 2 | hexagon-head bolt<br>M 8 X 58 | | 4 | |
| 6 | E 016 301 231 B | cover | 80 | 1 | VQ VR UV |
| 6 | 016 301 231 F | cover | 81- | 1 | MD MF ME |
| 7 | 016 301 299 | dowel sleeve | | 2 | |
| 8 | E 016 301 235 B | gasket | 80 | 1 | VQ VR UV |
| 8 | * 016 301 235 C | gasket | 81- | 1 | MD ME MF |

| Pos | Part Number | Name | Remarks | Qty | Model |
|---|---|---|---|---|---|
| 9 | 084 301 143 A | magnet | | 2 | |
| 10 | N 014 715 1 | pan-head screw<br>M 8 X 45 | | 7 | |
| 11 | 900 031 001 02 | washer<br>8,4 | | 7 | |
| 12 | 088 301 467 B | cover | | 1 | |
| 13 | N 013 371 1 | straight pin<br>6 M 6 X 24 | | 1 | |
| 14 | 019 301 115 | plug | | 1 | |
| 15 | 014 301 115 A | plug | 80 | 1 | VQ VR UV |
| 15 | 019 301 115 | plug | 81- | 1 | MD ME MF |
| 16 | 014 301 473 | guide sleeve | | 1 | |
| 17 | 014 301 485 | cap | | 1 | |
| 18 | 084 941 521 | switch | | 1 | |
| 20 | * 016 301 455 | gasket | 80 | 1 | VQ VR UV |
| 20A | * 016 301 455 A | gasket | 81- | 1 | MD ME MF |
| 21 | 016 301 465 A | cover | 80 | 1 | VQ VR UV |
| 21A | 016 301 453 B | cover | 81- | 1 | MD ME MF |
| 22 | * 928 303 120 01 | shaft seal | | 1 | |
| 25 | 900 075 193 08 | hexagon-head bolt<br>M 6 X 16 | | 1 | |
| 26 | N 012 226 5 | spring washer<br>B 6 | | 1 | |
| 27 | 900 074 164 02 | hexagon-head bolt<br>M 6 X 70 | 80 | 2 | VQ VR UV |
| 28 | 088 301 687 A | protective tube | | 1 | VQ VR UV<br>MD ME MF |
| 29 | * 088 301 699 A | sealing ring | | 1 | VQ VR UV<br>MD ME MF |
| 30 | 088 301 697 B | centring ring | | 1 | VQ VR UV<br>MD ME MF |
| 31 | * 999 113 275 40 | shaft seal | | 1 | VQ VR UV<br>MD ME MF |
| 32 | N 090 194 2 | hexagon-head bolt<br>M 7 X 16 | | 3 | |
| 33 | N 010 183 1 | hexagon-head bolt<br>M 12 X 75 | | 2 | |
| 34 | 900 028 014 02 | spring washer<br>B12 | | 3 | |
| 35 | N 011 020 8 | hexagon nut<br>M 12 | | 1 | |
| 36 | N 010 185 3 | hexagon-head bolt<br>M 12 X 80 | | 1 | |
| 37 | N 011 531 7 | washer<br>A 13 | | 1 | |
| 38 | N 010 460 2 | hexagon-head bolt<br>M 10 X 60 | | 1 | |
| 39 | N 011 527 2 | washer<br>A 10,5 | | 1 | |
| 40 | N 012 230 6 | spring washer<br>B 10 | | 1 | |
| 41 | N 011 010 13 | hexagon nut<br>M 10 | | 1 | |
| 42 | N 090 191 1 | hexagon-head bolt<br>M 8 X 35 | | 7 | |
| 43 | 088 409 131 C | cover | | 1 | |
| 44 | * 113 301 185 A | sealing ring | | 1 | |
| 45 | N 013 291 1 | tensioning sleeve | | 1 | |
| 46 | 019 301 153 | dowel sleeve | | 2 | |
| 47 | 016 301 349 | cover plate | -81 | 1 | |
| (47) | 016 301 349 | cover plate | 82- | 1 | |
| 48 | 477 521 177 | cap | | 1 | |
| | | - -- E N D -- - | | | |

| Model | Year | MG | SG | Illustration | Restrictions | Update | 9:58 | 16.08.2004 | PORSCHE | PET | PORSCHE |
|---|---|---|---|---|---|---|---|---|---|---|---|
| 924 | 85 | 3 | 02 | 302-05 | | 179 | | | | | |

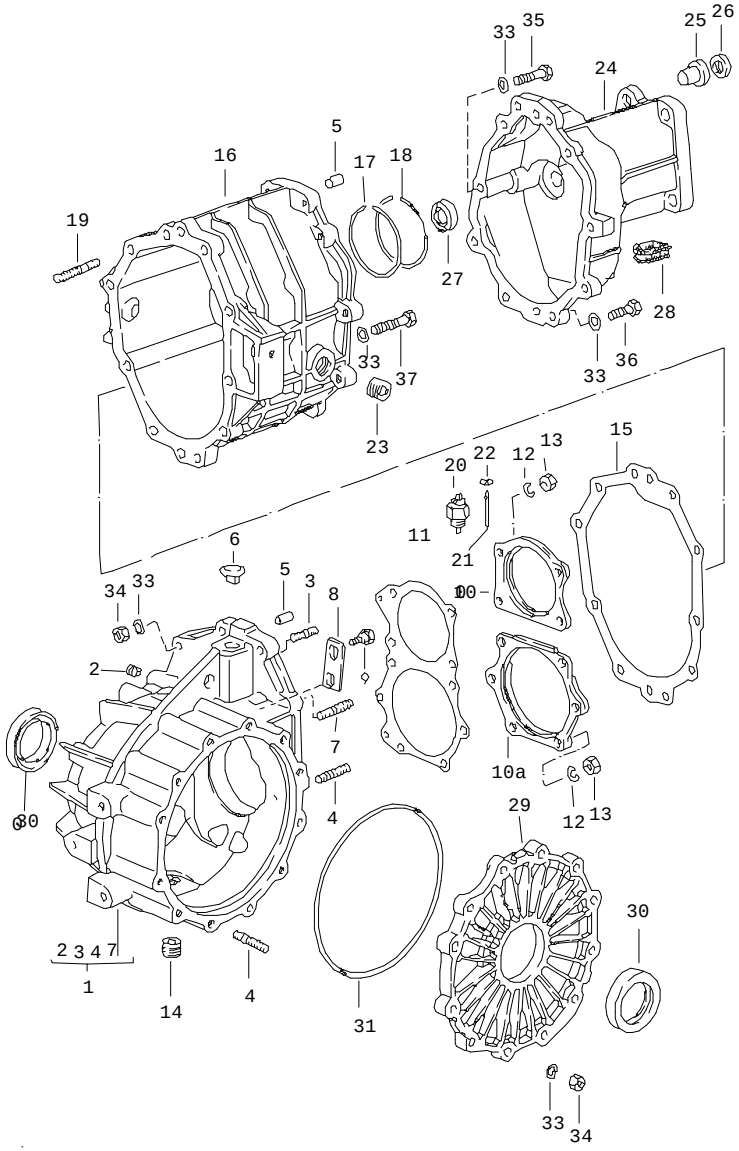


| Pos | Part Number | Name | Remarks | Qty | Model |
|---|---|---|---|---|---|
| | | replacement transmission<br>transmission case<br>manual transmission<br>G31.01/02/03 | | | TURBO/GT |
| - | > 931 300 010 00 | replacement transmission<br>ready for installation | | 1 | G31.01 |
| - | E 931 300 010 04 | replacement transmission<br>ready for installation | 81 | 1 | G31.03 |
| - | E 931 300 010 02 | replacement transmission<br>with<br>limited-slip differential<br>ready for installation | | 1 | G31.01 |
| - | E 931 300 010 05 | replacement transmission<br>with<br>limited-slip differential<br>ready for installation | 81 | 1 | G31.03 |
| 1 | 931 301 901 02 | rear axle housing | | 1 | |
| 2 | 999 504 047 00 | threaded insert<br>M 10 X 10 | | 2 | |
| 3 | N 014 532 4 | stud<br>BM 8 X 16 | | 4 | |
| 4 | 999 062 008 02 | stud<br>BM 8 X 25 | | 12 | |
| 5 | 900 012 110 00 | straight pin<br>M 6 X 14 | | 4 | |
| 6 | 928 301 311 01 | bleeder | | 1 | |
| 7 | 999 062 009 02 | stud<br>BM 8 X 28 | | 2 | |
| 8 | 477 303 132 A | locking piece | | 1 | |
| 9 | 477 303 133 A | hexagon-head bolt | | 2 | |
| 10 | 915 302 121 03 | tensioning plate | | 1 | |
| 10A | 931 302 123 01 | tensioning plate | | 1 | |
| 11 | 915 302 268 03 | adjusting shim<br>0,10 | | 1 | |
| 11 | 915 302 268 04 | adjusting shim<br>0,15 | | X | |

| Pos | Part Number | Name | Remarks | Qty | Model |
|---|---|---|---|---|---|
| 11 | 915 302 268 05 | adjusting shim<br>0,20 | | X | |
| 12 | 900 027 015 02 | lock ring<br>B 8 | | 10 | |
| 13 | 900 076 025 02 | hexagon nut<br>M 8 | | 10 | |
| 14 | E 113 301 141 B | magnetic plug | | 1 | |
| 15 | * 477 301 191 A | gasket | | 1 | |
| 16 | 931 301 902 00 | gear housing | | 1 | |
| 17 | 900 111 001 00 | snap ring | | 2 | |
| 18 | 999 152 031 01 | snap ring | | 2 | |
| 19 | E 999 062 098 02 | stud<br>BM 8 X 38 | | 1 | |
| 20 | 084 941 521 | switch | | 1 | |
| 21 | 931 303 175 00 | pin | | 1 | |
| 22 | 999 041 503 01 | locking ring | | 1 | |
| 23 | 111 301 127 E | screw plug<br>M 24 X 1,5 | | 1 | |
| 24 | 931 301 301 00 | transmission cover | | 1 | |
| 25 | E 001 301 209 | guide bush | | 1 | |
| 26 | * 001 301 227 | radial shaft seal<br>15 X 24 X 7 | | 1 | |
| 27 | * 999 113 247 40 | radial shaft seal | | 1 | |
| 28 | 928 301 171 00 | cap | | 1 | |
| 29 | E 915 301 311 06 | transmission cover | | 1 | |
| 30 | * 999 113 183 40 | radial shaft seal<br>45 X 68 X 10 | | 2 | |
| 31 | * 999 701 392 40 | o-ring | | 1 | |
| 33 | N 012 241 8 | spring washer<br>B 8 | | X | |
| 34 | 900 076 025 02 | hexagon nut<br>M 8 | | X | |
| 35 | 900 074 134 02 | hexagon-head bolt<br>M 8 X 45 | | 1 | |
| 36 | 900 075 099 02 | hexagon-head bolt<br>M 8 X 30 | | 9 | |
| 37 | 900 074 139 02 | hexagon-head bolt<br>M 8 X 55 | | 1 | |
| | | - -- E N D -- - | | | |

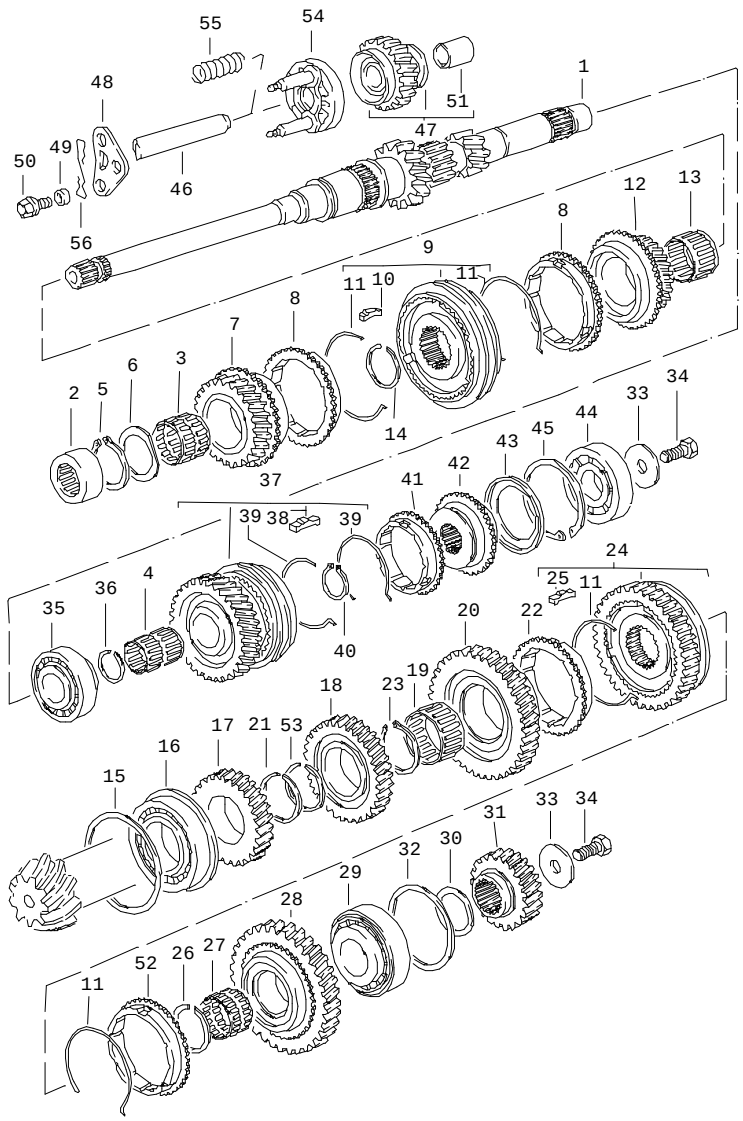


| Pos | Part Number | Name | Remarks | Qty | Model |
|---|---|---|---|---|---|
| | | gears and shafts<br>manual transmission<br>VQ VR UV MD<br>ME MF MB MX | | | 924 |
| 1 | 016 311 105 Q | drive shaft | | 1 | VQ VR UV<br>MD ME MF<br>MD ME MF |
| 2 | 088 311 123 | needle sleeve | | 1 | VQ VR UV<br>MD ME MF |
| 3 | 016 311 115 | needle-roller bearing<br>4th speed | | 1 | |
| 4 | 016 311 116 A | needle-roller bearing<br>5th speed | | 1 | |
| 5 | 088 311 287 | circlip<br>1,65 | | 1 | |
| 5 | 088 311 287 B | circlip<br>1,75 | | X | |
| 5 | 016 311 344 | circlip<br>together with<br>shaft<br>016.311.105.S<br>shaft<br>016.311.105.Q | | X | |
| 6 | 088 311 155 A | thrust washer | | 1 | |
| 7 | 016 311 351 A | shifting gear<br>4th speed | | 1 | VQ MD MB MX |
| 8 | 088 311 295 B | synchroniser ring<br>3rd, 4th speed | | 2 | |
| 9 | 088 311 301 B | synchronising hub<br>3rd, 4th speed | | 1 | |
| 10 | 088 311 245 | detent<br>3rd, 4th speed | | 3 | |
| 11 | 088 311 311 D | spring | | 4 | |
| 12 | 005 311 285 | shifting gear<br><br>3rd speed | | 1 | VQ MD<br>MB MX |
| 13 | 016 311 213 H | needle-roller bearing<br>3rd speed | | 1 | |

| Pos | Part Number | Name | Remarks | Qty | Model |
|---|---|---|---|---|---|
| 14 | 088 311 317 | circlip<br>1,50 | | 1 | |
| 14 | 088 311 317 B | circlip<br>1,56 | | X | |
| 14 | 088 311 317 C | circlip<br>1,62 | | X | |
| 15 | 088 311 391 | shim<br>0,20 | | 1 | |
| 15 | 088 311 391 A | shim<br>0,25 | | X | |
| 15 | 088 311 391 B | shim<br>0,30 | | X | |
| 15 | 088 311 391 C | shim<br>0,35 | | X | |
| 15 | 088 311 391 D | shim<br>0,40 | | X | |
| 15 | 088 311 391 E | shim<br>0.65 | | X | |
| 15 | 088 311 391 F | shim<br>0,90 | | X | |
| 15 | 088 311 391 G | shim<br>1,15 | | X | |
| 16 | 016 311 220 E | taper roller bearing | | 1 | |
| 17 | 016 311 149 C | gear wheel<br>4th speed<br>G >> MD 03 08 2 | | 1 | VQ MD<br>MB MX |
| 17 | 016 311 149 G | gear wheel<br>4th speed<br>G MD 04 08 2 >> | | 1 | VQ MD<br>MB MX |
| 18 | 016 311 131 D | gear wheel<br>3rd speed<br>G >> MD 03 08 2 | | 1 | VQ MD<br>MB MX |
| 18 | 016 311 131 E | gear wheel<br>3rd speed<br>G MD 04 08 2 >> | | 1 | VQ MD<br>MB MX |
| 19 | 016 311 229 A | needle-roller bearing<br>2nd gear | | 1 | |
| 20 | 016 311 271 | shifting gear<br>2nd gear | | 1 | |
| | | circlip<br>G >> MD 03 08 2 | -82 | | |
| 21 | 016 311 363 | circlip<br>2,24 | | 1 | |
| 21 | 016 311 363 A | circlip<br>2,26 | | X | |
| 21 | 016 311 363 B | circlip<br>2,28 | | X | |
| 21 | 016 311 363 C | circlip<br>2,30 | | X | |
| 21 | 016 311 363 D | circlip<br>2,32 | | X | |
| 21 | 016 311 363 E | circlip<br>2,34 | | X | |
| 21 | 016 311 363 F | circlip<br>2,36 | | X | |
| 21 | 016 311 363 G | circlip<br>2,38 | | X | |
| 21 | 016 311 363 H | circlip<br>2,40 | | X | |
| | | circlip<br>G MD 04 08 2 >> | | | |
| 21 | 016 311 363 AA | circlip<br>2,24 | | 1 | |
| 21 | 016 311 363 AB | circlip<br>2,26 | | X | |
| 21 | 016 311 363 AC | circlip<br>2,28 | | X | |
| 21 | 016 311 363 AD | circlip<br>2,30 | | X | |
| 21 | 016 311 363 AE | circlip<br>2,32 | | X | |

| Pos | Part Number | Name | Remarks | Qty | Model |
|---|---|---|---|---|---|
| 21 | 016 311 363 AF | circlip<br>2,34 | | X | |
| 21 | 016 311 363 AG | circlip<br>2,36 | | X | |
| 21 | 016 311 363 AH | circlip<br>2,38 | | X | |
| 21 | 016 311 363 AJ | circlip<br>2,40 | | X | |
| 22 | 016 311 295 | synchroniser ring<br>2nd gear | | 1 | |
| 23 | 016 311 287 | circlip<br>1,65 | | 1 | |
| 23 | 016 311 287 A | circlip<br>1,70 | | X | |
| 23 | 016 311 287 B | circlip<br>1,75 | | X | |
| 24 | 016 311 239 E | synchronising hub<br>1st/2nd gear | | 1 | |
| 25 | 088 311 313 | detent<br>1st/2nd gear | | 3 | |
| 26 | 016 311 327 | circlip<br>1,50 | | 1 | |
| 26 | 016 311 327 A | circlip<br>1,55 | | X | |
| 26 | 016 311 327 B | circlip<br>1,60 | | X | |
| 27 | 016 311 207 A | needle-roller bearing | | 1 | |
| 28 | 016 311 257 | shifting gear<br>1st gear | | 1 | |
| 29 | 016 311 375 B | taper roller bearing<br>see tpi<br>GR. 3/1 | | 1 | |
| 30 | 016 311 391 | adjusting shim<br>1,10 | | 1 | |
| 30 | 016 311 391 A | adjusting shim<br>1,40 | | X | |
| 30 | 016 311 391 B | adjusting shim<br>1,70 | | X | |
| 30 | 016 311 391 C | adjusting shim<br>2,00 | | X | |
| 30 | 016 311 391 D | adjusting shim<br>2,30 | | X | |
| 31 | 016 311 159 E | gear wheel<br>5th speed | | 1 | VQ MD |
| 32 | 016 311 393 | shim<br>0,24 | | 1 | |
| (32) | 016 311 393 A | shim<br>0,27 | | X | |
| (32) | 016 311 393 B | shim<br>0,30 | | X | |
| (32) | 016 311 393 C | shim<br>0,33 | | X | |
| (32) | 016 311 393 D | shim<br>0,36 | | X | |
| (32) | 016 311 393 E | shim<br>0,39 | | X | |
| (32) | 016 311 393 F | shim<br>0,42 | | X | |
| (32) | 016 311 393 G | shim<br>0,45 | | X | |
| (32) | 016 311 393 H | shim<br>0,69 | | X | |
| (32) | 016 311 393 J | shim<br>0,93 | | X | |
| (32) | 016 311 393 K | shim<br>1,17 | | X | |
| (32) | 016 311 393 L | shim<br>1,41 | | X | |
| 33 | N 902 582 01 | clamping screw | | 2 | |
| 34 | N 902 582 01 | clamping screw<br>M 10 X 22 | | 2 | |
| 35 | 016 311 427 | cylindrical-roller bearing | | 1 | |

| Pos | Part Number | Name | Remarks | Qty | Model |
|---|---|---|---|---|---|
| 36 | N 900 606 01 | circlip<br>A 27 X 1,35 | | 1 | |
| (36) | N 900 606 02 | circlip<br>A 27 X 1,40 | | X | |
| (36) | N 900 606 03 | circlip<br>A 27 X 1,45 | | X | |
| 37 | 016 311 353 D | shifting gear<br>5th speed | | 1 | VQ MD |
| 38 | 016 311 246 | detent<br>5th speed | | 3 | |
| 39 | 014 311 311 C | spring<br>5th speed | | 2 | |
| 40 | N 900 607 01 | circlip<br>A 27 X 1,9 | | 1 | |
| 41 | 014 311 295 E | synchroniser ring<br>5th speed | | 1 | |
| 42 | 016 311 192 A | clutch hub<br>5th speed | | 1 | |
| 43 | 016 311 449 | dust plate | | 1 | |
| 44 | 016 311 445 | four-point bearing | | 1 | |
| 45 | N 900 608 01 | circlip<br>A 68 X 2,83 | | 1 | |
| (45) | N 900 608 02 | circlip<br>A 68 X 2,90 | | X | |
| 46 | E 016 311 519 A | axle | 80 | 1 | VQ VR UV |
| (46) | 016 311 519 B | reverse idler gear shaft | 81- | 1 | MD ME MF |
| 47 | 016 311 529 D | reverse idler gear | | 1 | |
| 48 | 016 311 853 B | retainer plate | | 1 | |
| 49 | 088 301 291 A | shouldered bolt | | 1 | |
| 50 | 088 301 291 A | shouldered bolt<br>M 8 X 16 | | 1 | |
| 51 | 088 311 533 | bush | | 1 | |
| 52 | 016 311 247 | synchroniser ring<br>1st gear | | 1 | |
| 53 | 016 311 363 H | circlip<br>2,40<br>G >> MD 03 08 2 | | 1 | |
| 53 | 016 311 363 AJ | circlip<br>2,40<br>G MD 04 08 2 >> | | 1 | MD |
| 54 | 016 311 839 C | synchroniser ring | | 1 | MD |
| 55 | 016 311 859 C | compression spring | | 1 | MD |
| 56 | 016 311 861 C | spring | | 1 | MD |

- -- E N D -- -

| Model | Year | MG | SG | Illustration | Restrictions | Update | | | | |
|---|---|---|---|---|---|---|---|---|---|---|
| 924 | 85 | 3 | 03 | 303-05 | | 179 | 9:58 | 16.08.2004 | PORSCHE | PET | PORSCHE |

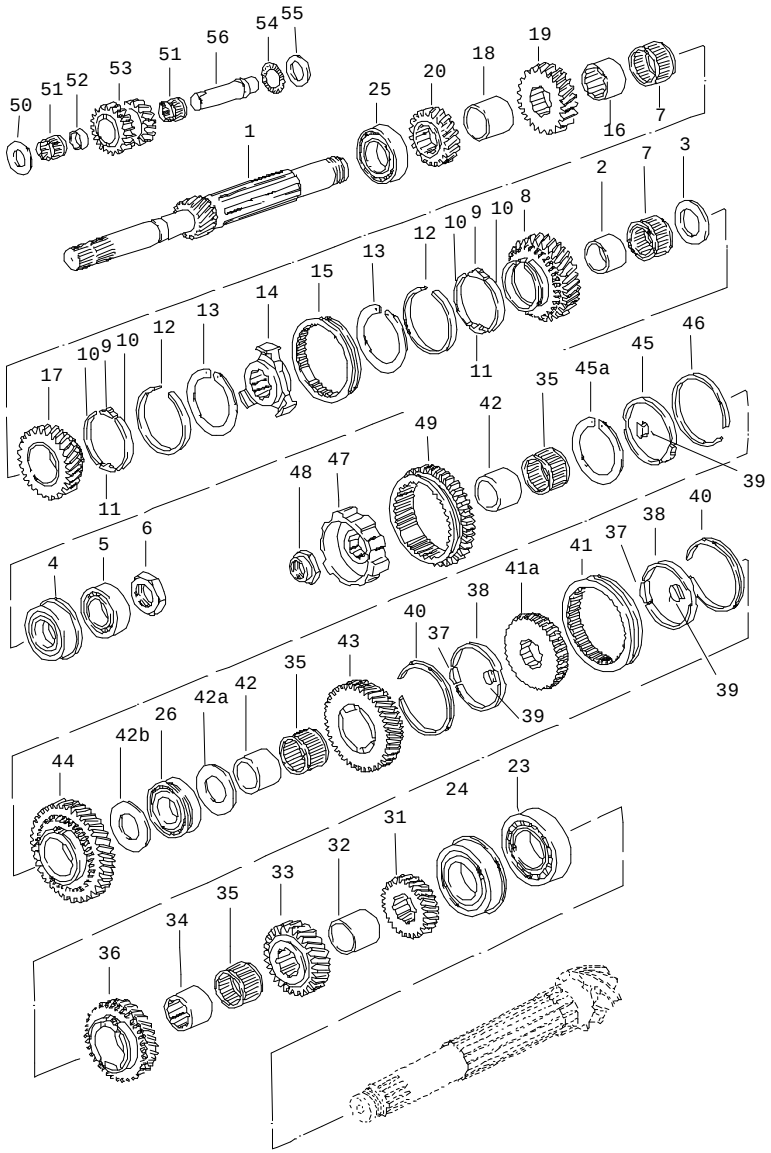


| Pos | Part Number | Name | Remarks | Qty | Model |
|---|---|---|---|---|---|
| | | gears and shafts<br>manual transmission<br>G31.01/02/03 | | | TURBO/GT |
| 1 | - | drive shaft<br>see group<br>3/03/10 | | 1 | |
| 2 | 915 302 261 00 | bush<br>5th speed | | 1 | |
| 3 | 930 302 291 00 | thrust washer | | 1 | |
| 4 | 999 052 030 00 | four-point bearing | | 1 | |
| 5 | 930 302 391 00 | cylindrical-roller bearing | | 1 | |
| 6 | 930 302 281 00 | collar nut<br>M 30 X 1,5 | | 1 | |
| 7 | 999 201 470 00 | needle cage | | 2 | |
| 8 | - | loose gear wheel<br>5th speed<br>see group<br>3/03/10 | | 1 | |
| 9 | 911 302 315 00 | stone | | 2 | |
| 10 | 911 302 316 00 | brake band | | 4 | |
| 11 | 911 302 317 12 | stop | | 2 | |
| 12 | 911 302 301 08 | synchroniser ring | | 2 | |
| 13 | 911 302 311 01 | circlip | | 2 | |
| 14 | 911 302 402 20 | guide sleeve | | 1 | |
| 15 | 911 302 411 20 | shift sleeve | | 1 | |
| 16 | E 915 302 262 00 | bush | | 1 | |
| 17 | - | loose gear wheel<br>4th speed<br>see group<br>3/03/10 | | 1 | |
| 18 | 477 302 266 | spacer sleeve | | 1 | |
| 19 | - | fixed gear wheel<br>3rd speed<br>see group<br>3/03/10 | | 1 | |

| Pos | Part Number | Name | Remarks | Qty | Model |
|---|---|---|---|---|---|
| 20 | - | fixed gear wheel<br>2nd gear<br>see group<br>3/03/10 | | 1 | |
| 23 | 999 110 146 00 | cylindrical-roller bearing | | 1 | |
| 24 | 999 052 053 00 | four-point bearing | | 1 | |
| 25 | 999 110 091 00 | cylindrical-roller bearing | | 1 | |
| 26 | 999 110 076 00 | cylindrical-roller bearing | | 1 | |
| 31 | - | fixed gear wheel<br>5th speed<br>see group<br>3/03/10 | | 1 | |
| 32 | 477 302 266 | spacer sleeve | | 1 | |
| 33 | - | fixed gear wheel<br>4th speed<br>see group<br>3/03/10 | | 1 | |
| 34 | 477 302 263 | bush<br>3rd speed | | 1 | |
| 35 | 477 302 298 | needle cage | | 3 | |
| 36 | - | loose gear wheel<br>3rd speed<br>see group<br>3/03/10 | | 1 | |
| 37 | 915 302 315 01 | stone | | 3 | |
| 38 | E 928 302 318 01 | double barricade tape | | 2 | |
| 39 | 928 302 321 00 | stop | | 3 | |
| 40 | 931 302 301 01 | synchroniser ring | | 2 | |
| 41 | 928 302 413 08 | shift sleeve | | 1 | |
| 41A | 477 302 402 | guide sleeve<br>2nd/3rd gear | | 1 | |
| 42 | 477 302 261 | bush<br>1st/2nd gear | | 2 | |
| 42A | 477 302 291 | thrust washer | | 1 | |
| 42B | 931 302 291 00 | thrust washer | | 1 | |
| 43 | - | loose gear wheel<br>2nd gear<br>see group<br>3/03/10 | | 1 | |
| 44 | - | loose gear wheel<br>1st gear<br>see group<br>3/03/10 | | 1 | |
| 45 | 928 302 319 05 | double barricade tape | | 1 | |
| 45A | 915 302 311 01 | circlip | | 1 | |
| 46 | 931 302 301 02 | synchroniser ring | | 1 | G31.01/02 |
| 46 | 915 302 301 06 | synchroniser ring | | 1 | G31.03 |
| 47 | 931 302 401 00 | guide sleeve<br>1st gear<br>reverse gear | | 1 | |
| 48 | 915 302 282 00 | collar nut<br>M 24 X 1,5 | | 1 | |
| 49 | 931 302 227 00 | shifting gear<br>1st gear<br>reverse gear | | 1 | |
| 50 | 915 302 229 01 | thrust washer | | 1 | |
| 51 | 999 201 141 00 | needle cage | | 2 | |
| 52 | 931 302 231 00 | intermediate ring | | 1 | |
| 53 | - | reverse idler gear<br>see group<br>3/03/10 | | 1 | |
| 54 | 999 202 001 00 | axial needle bearing cage | | 1 | |
| 55 | 999 201 707 01 | washer | | 1 | |
| 56 | 931 302 233 00 | bolt | | 1 | |
| | | - -- E N D -- - | | | |

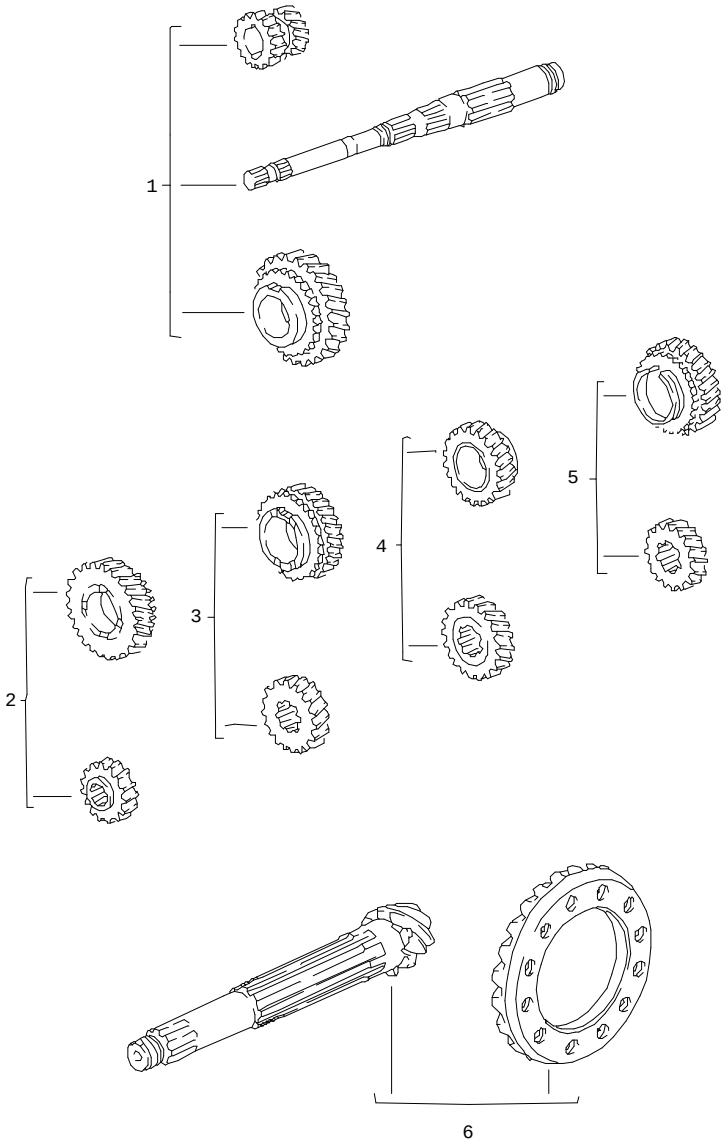


| Pos | Part Number | Name | Remarks | Qty | Model |
|---|---|---|---|---|---|
| | | gear sets<br>manual transmission<br>G31.01/02/03 | | | TURBO/GT |
| | | transmission<br>TYP G 31.01 | | | TURBO |
| 1 | 931 302 901 02 | gear set<br>1st gear<br>reverse gear<br>Z = 12 : 38<br>comprising:<br>drive shaft<br>loose gear wheel<br>reverse idler gear | | 1 | |
| 2 | 931 302 902 02 | gear set<br>2nd gear<br>Z= 18 : 32<br>comprising:<br>loose gear wheel<br>fixed gear wheel | | 1 | |
| 3 | 477 302 903 | gear set<br>3rd speed<br>Z= 23 : 28<br>comprising:<br>loose gear wheel<br>fixed gear wheel | | 1 | |
| 4 | 477 302 904 | gear set<br>4th speed<br>Z= 29 : 27<br>comprising:<br>loose gear wheel<br>fixed gear wheel | | 1 | |
| 5 | 477 302 905 A | gear set<br>5th speed<br>Z= 34 : 24<br>comprising:<br>loose gear wheel<br>fixed gear wheel | | 1 | |
| 6 | 931 302 911 01 | ring gear and pinion shaft<br>8:33<br>comprising:<br>drive shaft<br>crown wheel | | 1 | |
| | | transmission<br>TYP G 31.03 | 81 | | GT |

| Pos | Part Number | Name | Remarks | Qty | Model | Pos | Part Number | Name | Remarks | Qty | Model |
|---|---|---|---|---|---|---|---|---|---|---|---|
| 1 | 931 302 901 02 | gear set<br>1st gear<br>reverse gear<br>Z= 12 : 38<br>comprising:<br>drive shaft<br>loose gear wheel<br>reverse idler gear | | 1 | | | | | | | |
| 2 | 931 302 902 02 | gear set<br>2nd gear<br>Z= 18 : 32<br>comprising:<br>loose gear wheel<br>fixed gear wheel | | 1 | | | | | | | |
| 3 | E 477 302 903 A | gear set<br>3rd speed<br>Z= 23 : 28<br>comprising:<br>loose gear wheel<br>fixed gear wheel | | 1 | | | | | | | |
| 4 | 477 302 904 A | gear set<br>4th speed<br>Z= 29 : 27<br>comprising:<br>loose gear wheel<br>fixed gear wheel | | 1 | | | | | | | |
| 5 | 477 302 905 B | gear set<br>5th speed<br>Z= 34 : 24<br>comprising:<br>loose gear wheel<br>fixed gear wheel | | 1 | | | | | | | |
| 6 | 931 302 911 33 | ring gear and pinion shaft<br>8:33<br>comprising:<br>drive shaft<br>crown wheel | | 1 | | | | | | | |
| | | - -- E N D -- - | | | | | | | | | |

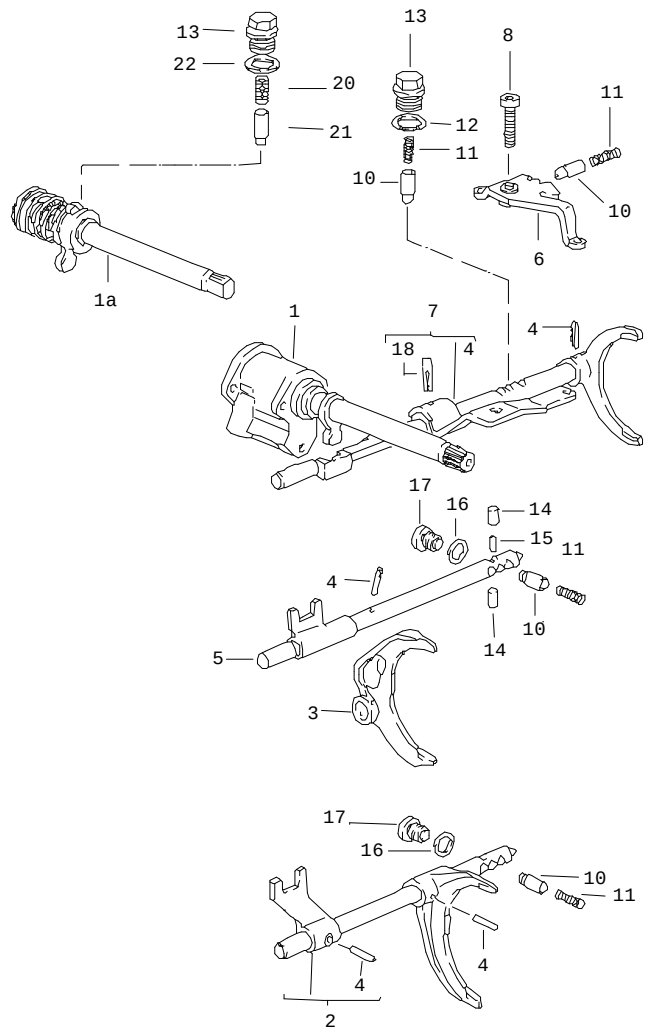


| Pos | Part Number | Name | Remarks | Qty | Model |
|---|---|---|---|---|---|
| | | shift rods<br>forks<br>manual transmission<br>VQ VR UV MD<br>ME MF MB MX | | | 924 |
| 1 | 016 311 475 A | shift rod<br>ready for installation | 80 | 1 | VQ VR UV |
| 1A | 016 311 475 G | shift rod<br>ready for installation | 81- | 1 | MD ME MF<br>MB MX |
| 2 | 016 311 549 A | shift fork<br>1st/2nd gear | | 1 | |
| 3 | 016 311 561 A | shift fork<br>3rd, 4th speed | | 1 | |
| 4 | N 900 073 01 | tensioning sleeve<br>6 X 22 | | 4 | |
| 5 | 016 311 567 | gear shift rod<br>3rd, 4th speed | | 1 | |
| 6 | 016 311 573 B | reverse lever | | 1 | |
| 7 | E 016 311 575 B | gear shift rod<br>5th speed<br>reverse gear | 80 | 1 | VQ VR UV |
| (7) | 016 311 575 C | gear shift rod | 81- | 1 | MD ME MF |
| 8 | 084 311 589 B | pan-head screw<br>M 10 X 32 | | 1 | |
| 10 | 084 311 621 D | bush | | 4 | |
| 11 | 014 311 641 A | compression spring | | 4 | |
| 12 | 900 123 140 30 | sealing ring<br>A 18 X 22 | | 1 | |
| 13 | 005 311 689 | screw plug | | 1 | |
| 14 | 014 311 629 | detent | | 2 | |
| 15 | 014 311 635 | intermediate piece | | 1 | |
| 16 | * 088 311 599 | sealing ring | | 2 | |
| 17 | 088 311 721 | stop screw | | 2 | |
| 18 | N 013 336 1 | tensioning sleeve<br>6 X 26 | | 1 | |

| Model | Year | MG | SG | Illustration | Restrictions | Update | | | | |
|---|---|---|---|---|---|---|---|---|---|---|
| 924 | 85 | 3 | 04 | 304-00 | | 179 | 9:59 | 16.08.2004 | PORSCHE | PET | PORSCHE |

| Pos | Part Number | Name | Remarks | Qty | Model | Pos | Part Number | Name | Remarks | Qty | Model |
|---|---|---|---|---|---|---|---|---|---|---|---|
| - | E N 013 363 1 | straight pin<br>5 M 6 X 24 | 80 | 1 | VQ VR UV | | | | | | |
| 20 | 016 311 735 A | compression spring | 81- | 1 | MD ME MF | | | | | | |
| 21 | 016 311 717 C | bush | 81- | 1 | MD ME MF | | | | | | |
| 22 | * 005 311 599 | sealing washer | 81- | 1 | MD ME MF | | | | | | |
| | | - -- E N D -- - | | | | | | | | | |

| Model | Year | MG | SG | Illustration | Restrictions | Update | 9:59 | 16.08.2004 | PORSCHE | PET | PORSCHE |
|---|---|---|---|---|---|---|---|---|---|---|---|
| 924 | 85 | 3 | 04 | 304-05 | | 179 | | | | | |

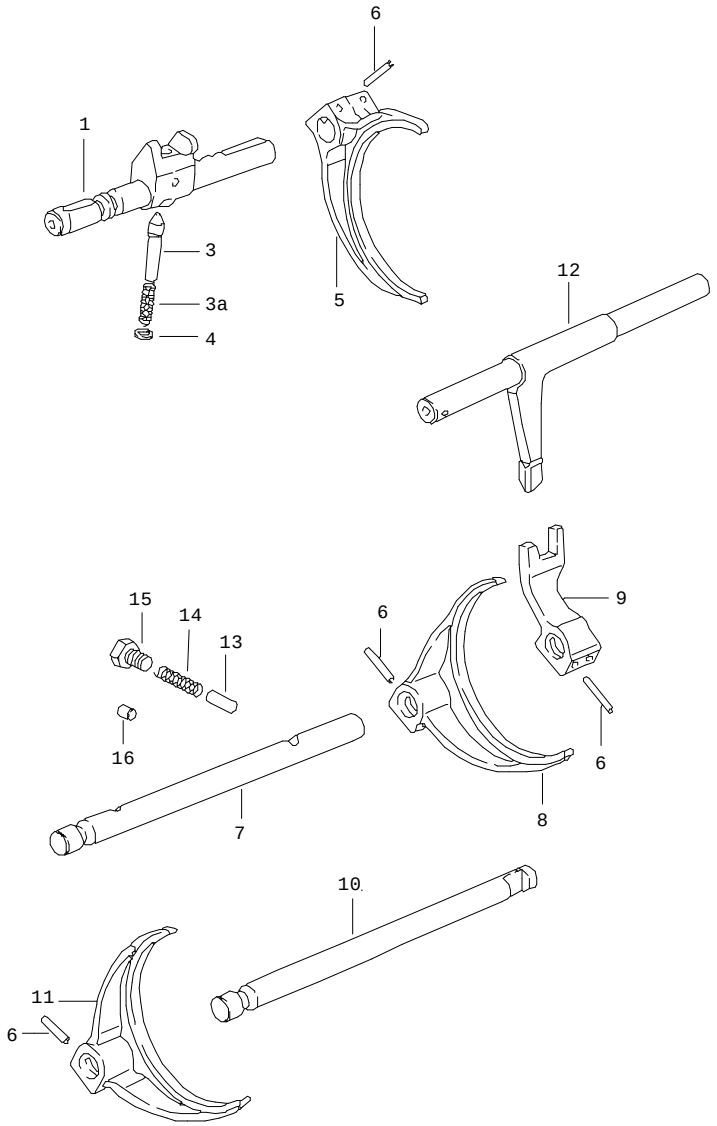


| Pos | Part Number | Name | Remarks | Qty | Model |
|---|---|---|---|---|---|
| | | shift rods<br>forks<br>manual transmission<br>G31.01/02/03 | | | TURBO/GT |
| 1 | 931 303 102 01 | gear shift rod<br>1st gear<br>reverse gear | | 1 | |
| 3 | 477 303 230 C | locking bolt | | 1 | |
| 3A | 477 303 234 C | spring | | 1 | G31.01/02 |
| 3A E | 931 303 234 00 | spring | | 1 | G31.03 |
| 4 | 477 303 235 | washer | | 1 | |
| 5 | 931 303 111 00 | shift fork<br>1st gear<br>reverse gear | | 1 | |
| 6 | N 013 317 1 | roll pin<br>5 X 28 | | 6 | |
| 7 | 477 303 103 A | gear shift rod<br>2nd/3rd gear | | 1 | |
| 8 | 477 303 112 | shift fork<br>2nd/3rd gear | | 1 | |
| 9 | 477 303 115 | contact<br>2nd/3rd gear | | 1 | |
| 10 | 477 303 104 A | gear shift rod<br>4th/5th gear | | 1 | |
| 11 | 477 303 114 | shift fork<br>4th/5th gear | | 1 | |
| 12 E | 477 303 101 | inner shift rod | | 1 | |
| 13 | 931 303 131 00 | detent | | 4 | |
| 14 | 477 303 236 | spring | | 3 | |
| 15 | 900 075 352 02 | hexagon-head bolt<br>M 10 X 8 | | 3 | |
| 16 | 901 105 379 00 | plug | | 1 | |
| | | - -- E N D -- - | | | |

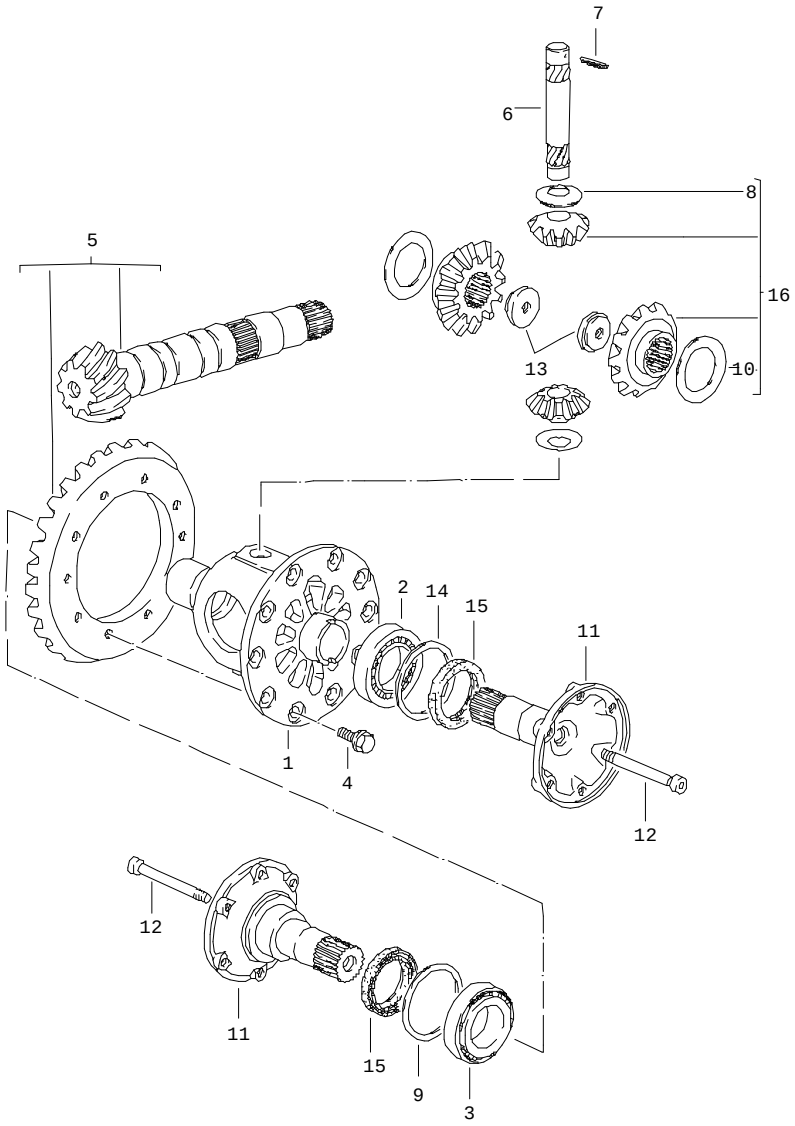


| Pos | Part Number | Name | Remarks | Qty | Model |
|---|---|---|---|---|---|
| | | differential<br>manual transmission<br>VQ VR UV MD<br>ME MF MB MX | | | 924 |
| 1 | 088 409 121 B | differential housing | | 1 | |
| 2 | 016 409 123 | taper roller bearing | /L | 1 | |
| 3 | 113 517 185 C | taper roller bearing | /R | 1 | |
| 4 | 088 409 135 A | hexagon-head bolt<br>M 10 X 18 | | 10 | |
| 5 | 016 409 143 AJ | ring gear and pinion shaft<br>9 : 35<br>G >> MD 03 08 2 | | 1 | VQ MD MB MX |
| (5) | 016 409 143 BF | ring gear and pinion shaft<br>9 : 35<br>G MD 04 08 2 >> | | 1 | MD VQ MB MX |
| 6 | 005 409 177 | bolt | | 1 | |
| 7 | N 013 319 1 | tensioning sleeve<br>5 X 36 | | 1 | |
| 8 | * 016 409 170 | thrust washer | | 2 | |
| 9 | 113 517 201 A | shim<br>0,15 | /R | 1 | |
| (9) | 113 517 202 A | shim<br>0,20 | /R | X | |
| (9) | 113 517 203 A | shim<br>0,30 | /R | X | |
| (9) | 113 517 204 A | shim<br>0,40 | /R | X | |
| (9) | 113 517 205 A | shim<br>0,50 | /R | X | |
| (9) | 113 517 206 A | shim<br>0,60 | /R | X | |
| (9) | 02A 409 210 A | shim<br>0,70 | /R | X | |
| (9) | 02A 409 210 C | shim<br>0,80 | /R | X | |

| Pos | Part Number | Name | Remarks | Qty | Model |
|---|---|---|---|---|---|
| (9) | 02A 409 210 E | shim<br>0,90 | /R | X | |
| (9) | 02A 409 210 G | shim<br>1,00 | /R | X | |
| (9) | 113 517 211 A | shim<br>1,20 | /R | X | |
| 10 | * 011 519 215 | thrust washer<br>0,50 | | 2 | |
| (10) | 088 409 249 | thrust washer<br>0,60 | | X | |
| (10) | 088 409 249 A | thrust washer<br>0,70 | | X | |
| (10) | 088 409 249 B | thrust washer<br>0,80 | | X | |
| 11 | 088 409 355 C | flanged shaft | | 2 | |
| 12 | 088 409 359 | screw | | 2 | |
| 13 | 016 409 161 | nut | | 2 | |
| 14 | 018 409 381 | shim<br>0,15 | /L | 1 | |
| (14) | 018 409 383 | shim<br>0,20 | /L | X | |
| (14) | 018 409 385 | shim<br>0,25 | /L | X | |
| (14) | 018 409 387 | shim<br>0,50 | /L | X | |
| (14) | 018 409 389 | shim<br>0,80 | /L | X | |
| (14) | 018 409 391 | shim<br>1,00 | /L | X | |
| (14) | 018 409 393 | shim<br>1,50 | /L | X | |
| 15 | * 016 409 399 B | radial shaft seal | | 2 | |
| 16 | * 090 598 081 | repair kit<br>for<br>differential | | 1 | |

| Pos | Part Number | Name | Remarks | Qty | Model |
|---|---|---|---|---|---|
| | | - -- E N D -- - | | | |

| Model | Year | MG | SG | Illustration | Restrictions | Update | | | | |
|---|---|---|---|---|---|---|---|---|---|---|
| 924 | 85 | 3 | 05 | 305-05 | | 179 | 10:00 | 16.08.2004 | PORSCHE | PET | PORSCHE |

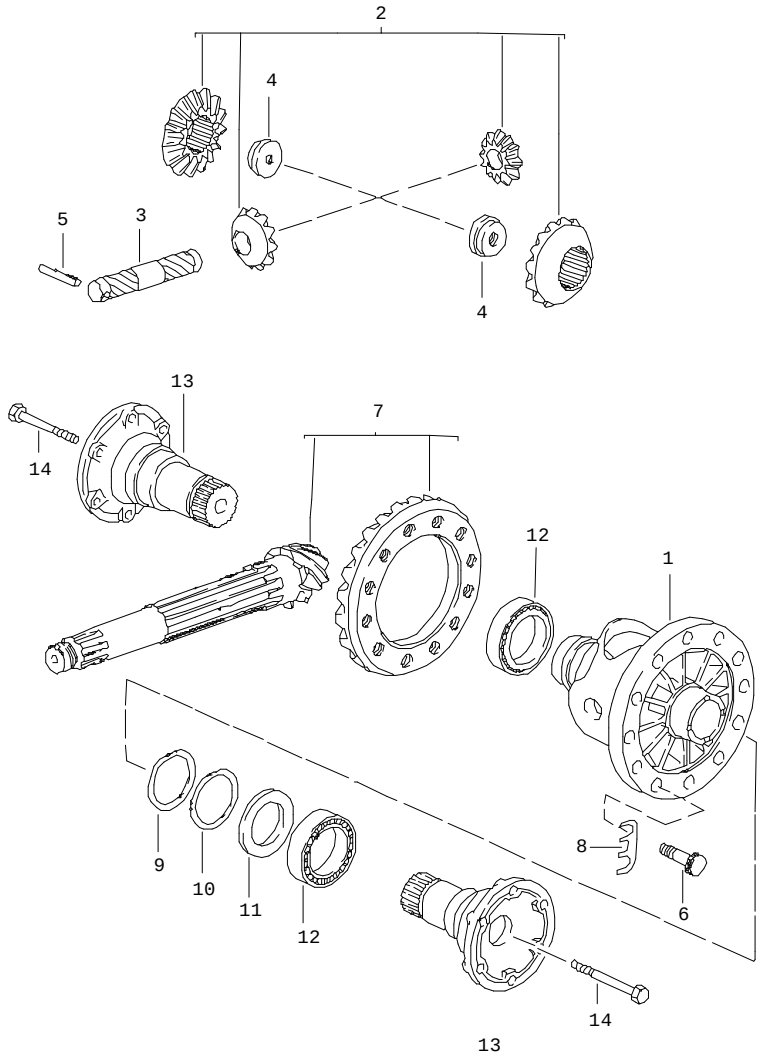


| Pos | Part Number | Name | Remarks | Qty | Model |
|---|---|---|---|---|---|
| | | differential<br>manual transmission<br>G31.01/02/03 | | | TURBO/GT |
| 1 | 930 332 212 01 | differential housing<br>bolt<br>$ 21 MM | | 1 | |
| 2 | * 928 332 902 00 | differential pinions<br>1 set<br>bolt<br>$ 18 MM | | 1 | |
| 2 | * 928 332 902 01 | differential pinions<br>set<br>bolt<br>$ 21 MM<br>G 3101 05314 >> | | 1 | |
| 3 | 005 409 177 00 | differential bolt<br>$ 18 MM | | 1 | |
| 3 | 928 332 207 05 | differential bolt<br>$ 21 MM<br>G 3101 05314 >> | | 1 | |
| 4 | 928 332 279 02 | nut<br>bolt<br>$ 21 MM | | 2 | |
| 5 | 900 309 035 00 | roll pin<br>5 X 40 | | 1 | |
| 6 | 928 332 276 03 | hexagon-head bolt | | 12 | |
| 7 | * 931 302 911 01 | ring gear and pinion shaft<br>8:33 | | 1 | G31.01 |
| (7) | * 931 302 911 33 | ring gear and pinion shaft<br>8:33 | | 1 | G31.03 |
| 8 | 901 332 285 01 | tab washer | | 6 | |
| 9 | 915 332 265 00 | adjusting ring<br>2,40 | | 2 | |
| (9) | 915 332 265 01 | adjusting ring<br>2,50 | | X | |
| (9) | 915 332 265 02 | adjusting ring<br>2,60 | | X | |
| (9) | 915 332 265 03 | adjusting ring<br>2,70 | | X | |

| Pos | Part Number | Name | Remarks | Qty | Model | Pos | Part Number | Name | Remarks | Qty | Model |
|---|---|---|---|---|---|---|---|---|---|---|---|
| (9) | 915 332 265 04 | adjusting ring<br>2,80 | | X | | | | | | | |
| (9) | 915 332 265 05 | adjusting ring<br>2,90 | | X | | | | | | | |
| (9) | 915 332 265 06 | adjusting ring<br>3,00 | | X | | | | | | | |
| (9) | 915 332 265 07 | adjusting ring<br>3,10 | | X | | | | | | | |
| (9) | 915 332 265 08 | adjusting ring<br>3,20 | | X | | | | | | | |
| (9) | 915 332 265 09 | adjusting ring<br>3,30 | | X | | | | | | | |
| (9) | 915 332 265 10 | adjusting ring<br>3,40 | | X | | | | | | | |
| (9) | 915 332 265 11 | adjusting ring<br>3,50 | | X | | | | | | | |
| (9) | 915 332 265 12 | adjusting ring<br>3,60 | | X | | | | | | | |
| (9) | 915 332 265 13 | adjusting ring<br>3,70 | | X | | | | | | | |
| 10 | 915 332 263 00 | washer | | 2 | | | | | | | |
| 11 | 477 332 344 | intermediate ring | | 1 | | | | | | | |
| 12 | 999 059 027 00 | taper roller bearing | | 2 | | | | | | | |
| 13 | 477 332 209 A | joint flange | | 2 | | | | | | | |
| 14 | 900 074 291 02 | hexagon-head bolt<br>M 10 X 80<br>bolt<br>$ 18 MM | | 2 | | | | | | | |
| 14 | 900 074 291 02 | hexagon-head bolt<br>M 10 X 78<br>bolt<br>$ 21 MM<br>G 3101 05314 >> | | 2 | | | | | | | |
| | | - -- E N D -- - | | | | | | | | | |

| Model | Year | MG | SG | Illustration | Restrictions | Update | | | | |
|---|---|---|---|---|---|---|---|---|---|---|
| 924 | 85 | 3 | 05 | 305-06 | | 179 | 10:00 | 16.08.2004 | PORSCHE | PET | PORSCHE |

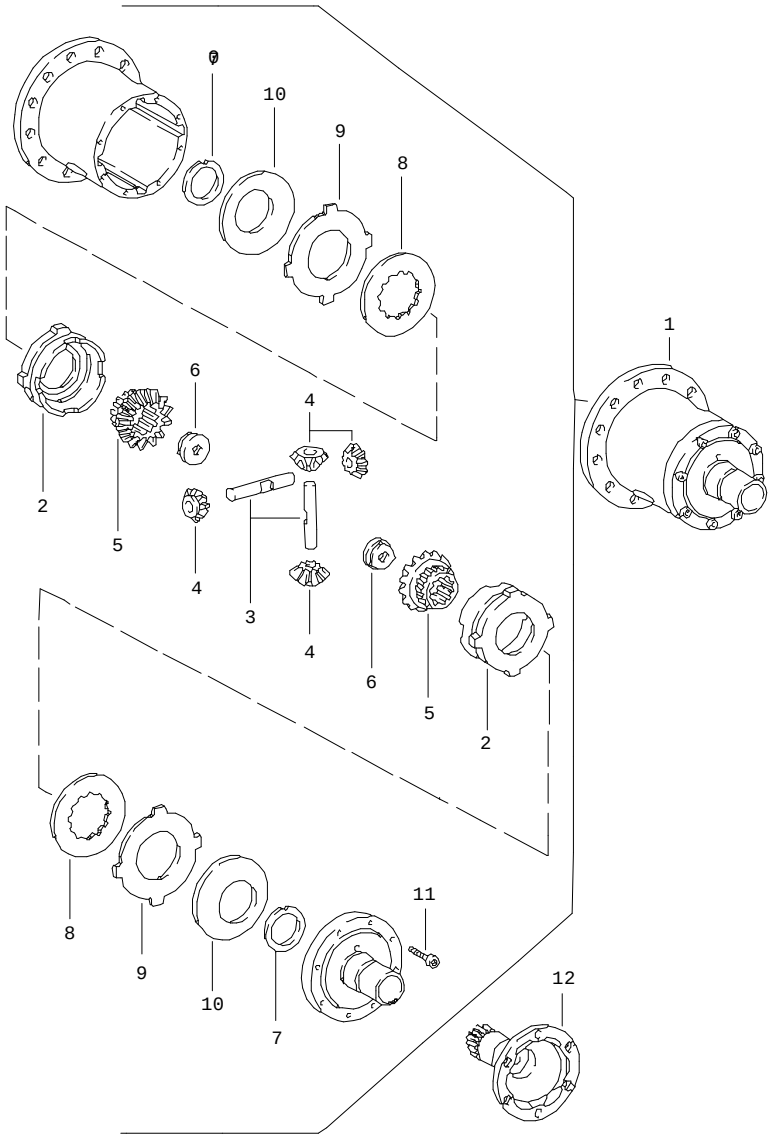


| Pos | Part Number | Name | Remarks | Qty | Model |
|---|---|---|---|---|---|
| | | limited-slip differential<br>manual transmission<br>VQ VR UV MD<br>ME MF MB MX<br>4Q 5Q 6Q | | | 924 M 220 |
| 1 | 944 332 053 00 | limit.-slip different. 40% | | 1 | |
| 2 | 951 332 511 00 | thrust ring | | 2 | |
| 3 | 928 332 541 00 | differential shaft | | 2 | |
| 4 | 944 332 531 00 | bevel pinion | | 4 | |
| 5 | 944 332 535 00 | shaft bevel gear | | 2 | |
| 6 | 016 409 161 | nut | | 2 | |
| 7 | 944 332 561 00 | thrust washer | | 2 | |
| 8 | 917 332 551 10 | inner disc<br>2,00 | | 2 | |
| 9 | 917 332 552 10 | disc with external splines<br>1,90 | | 2 | |
| 9 | 917 332 552 11 | disc with external splines<br>2,00 | | X | |
| 9 | 917 332 552 12 | disc with external splines<br>2,10 | | X | |
| 10 | 928 332 555 00 | cup spring<br>2,00 | | 2 | |
| 11 | 999 119 011 00 | pan-head screw<br>M 8 X 1 X 25 | | 2 | |
| 12 | 088 409 355 C | flanged shaft | | 2 | |
| | | - -- E N D -- - | | | |

| Model | Year | MG | SG | Illustration | Restrictions | Update | | | | |
|---|---|---|---|---|---|---|---|---|---|---|
| 924 | 85 | 3 | 05 | 305-10 | | 179 | 10:00 | 16.08.2004 | PORSCHE | PET | PORSCHE |

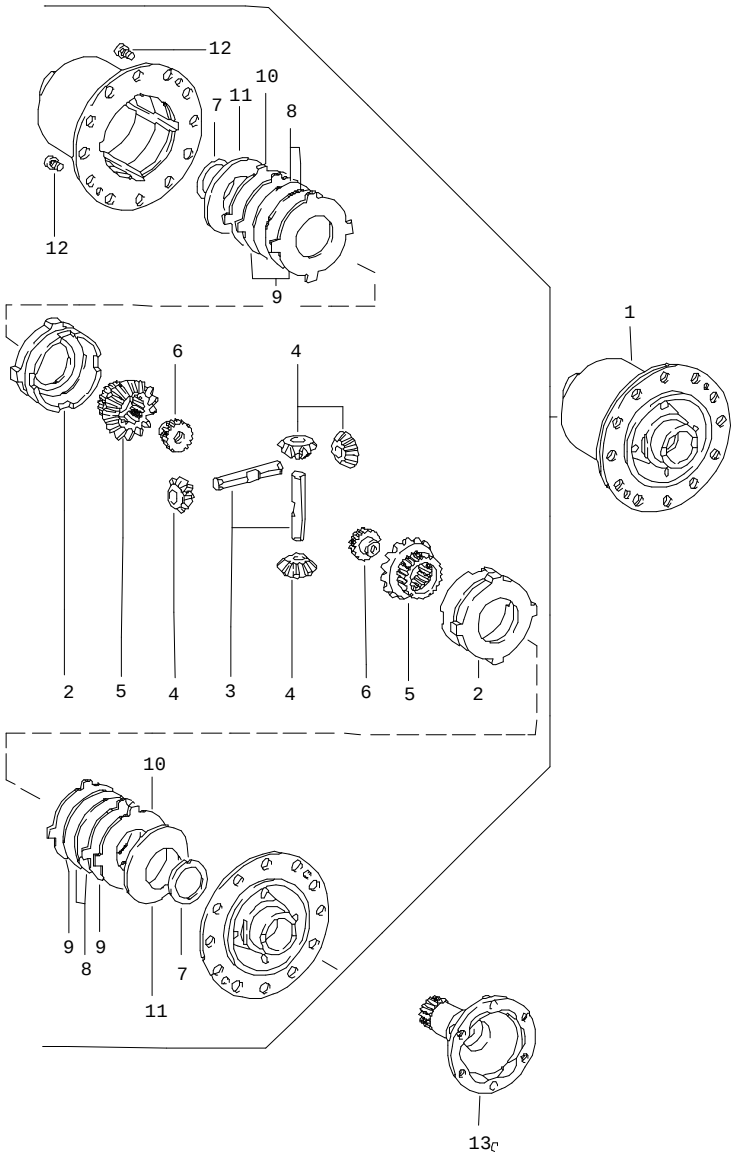


| Pos | Part Number | Name | Remarks | Qty | Model |
|---|---|---|---|---|---|
| | | limited-slip differential<br>manual transmission<br>G31.01/02/03 | | | TURBO/GT |
| 1 | 930 332 053 03 | limited-slip differential | | 1 | |
| 2 | 901 332 511 11 | thrust ring | | 2 | |
| 3 | 915 332 541 02 | differential shaft | | 2 | |
| 4 | 915 332 531 02 | bevel pinion | | 4 | |
| 5 | 930 332 535 01 | shaft bevel gear | | 2 | |
| 6 | 928 332 279 01 | threaded disc | | 2 | |
| 7 | 901 332 561 11 | thrust washer | | 2 | |
| 8 | 917 332 551 10 | inner disc<br>2,00 | | 4 | |
| 9 | 917 332 552 10 | disc with external splines<br>1,90 | | 4 | |
| 9 | 917 332 552 11 | disc with external splines<br>2,00 | | X | |
| 9 | 917 332 552 12 | disc with external splines<br>2,10 | | X | |
| 10 | 930 332 553 00 | lamina<br>1,40 | | 2 | |
| 11 | 928 332 555 00 | cup spring<br>2,50 | | 2 | |
| 12 | 900 119 002 00 | pan-head screw<br>M 6 X 10 | | 2 | |
| 13 | 477 332 209 A | joint flange | | 2 | |
| | | - -- E N D -- - | | | |

| Model | Year | MG | SG | Illustration | Restrictions | Update | 10:00 | 16.08.2004 | PORSCHE | PET | PORSCHE |
|---|---|---|---|---|---|---|---|---|---|---|---|
| 924 | 85 | 3 | 06 | 306-00 | | 179 | | | | | |

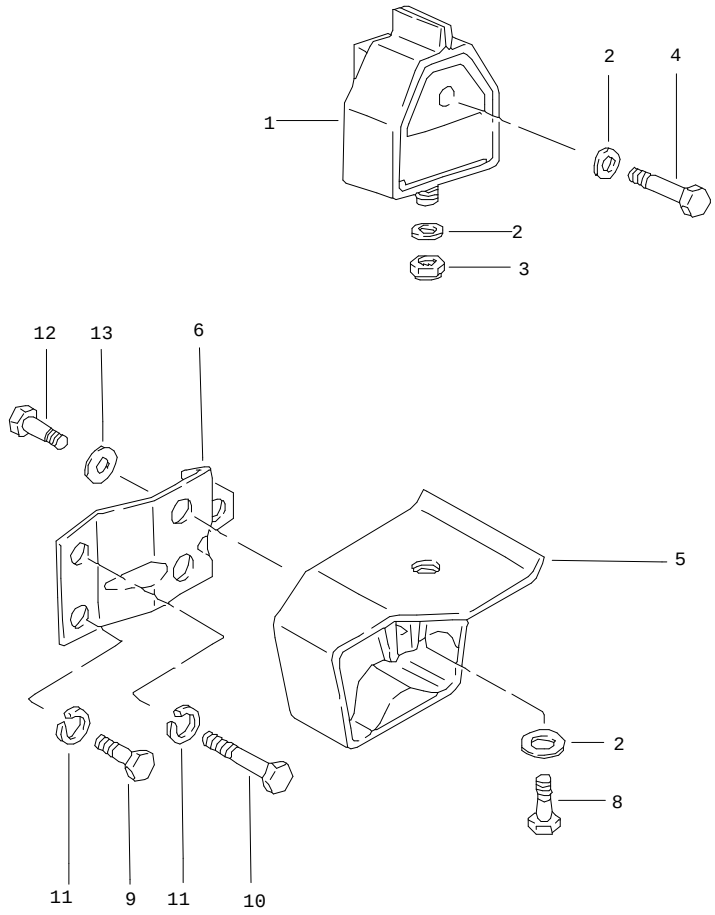


| Pos | Part Number | Name | Remarks | Qty | Model |
|---|---|---|---|---|---|
| | | transmission suspension<br>manual transmission | | | |
| | | POS.1 - 4<br>for<br>G31.01/02/03 | | | |
| 1 | 477 399 153 H | transmission mounting | | 2 | |
| 2 | 900 025 008 09 | washer<br>A 10,5 | | 4 | |
| 3 | N 022 149 2 | lock nut<br>VM 10 | | 2 | |
| 4 | N 010 473 6 | hexagon-head bolt<br>M 10 X 75 | | 2 | |
| | | POS.5 - 13<br>for<br>VQ VR UV MD | | | |
| 5 | 477 399 153 J | transmission mounting | | 2 | |
| 6 | 477 399 167 E | bracket | /L | 1 | |
| (6) | 477 399 168 E | bracket | /R | 1 | |
| 8 | 900 075 111 08 | hexagon-head bolt<br>M 10 X 30 | | 2 | |
| 9 | N 010 240 7 | hexagon-head bolt<br>M 8 X 20 | | 2 | |
| 10 | N 010 340 4 | hexagon-head bolt<br>M 8 X 40 | | 2 | |
| 11 | N 012 009 3 | lock ring<br>A 8 | | 4 | |
| 12 | 900 075 029 09 | hexagon-head bolt<br>M 8 X 25 | | 4 | |
| 13 | N 011 525 13 | washer<br>A 8,4 | | 4 | |
| | | - -- E N D -- - | | | |

| Model | Year | MG | SG | Illustration | Restrictions | Update | | | | |
|---|---|---|---|---|---|---|---|---|---|---|
| 924 | 85 | 3 | 07 | 307-00 | | 179 | 10:00 | 16.08.2004 | PORSCHE | PET | PORSCHE |

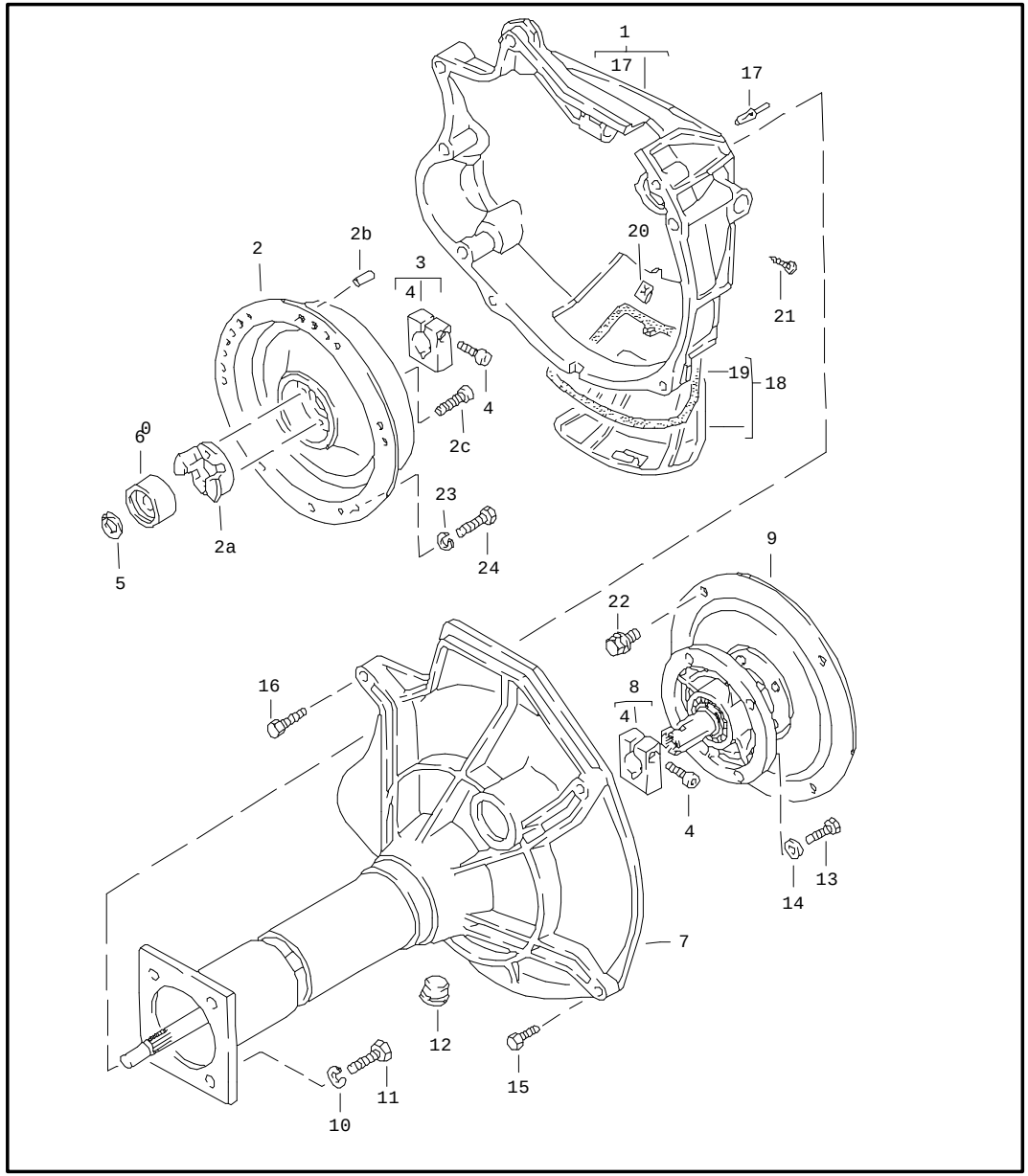


| Pos | Part Number | Name | Remarks | Qty | Model |
|---|---|---|---|---|---|
| | | central tube<br>automatic transmission | | | 924 |
| 1 | 477 521 109 | clutch housing | | 1 | |
| 2 | 477 521 603 | damper | | 1 | |
| 2A | 477 521 617 | stop plate | | 1 | |
| 2B | 999 095 019 00 | clamping pin<br>S 10 X 20 | | 2 | |
| 2C | N 014 725 2 | pan-head screw<br>M 8 X 25 | | 2 | |
| 3 | 477 521 247 E | terminal | | 1 | |
| 4 | 477 521 501 A | pan-head screw | | 2 | |
| 5 | 900 273 002 01 | circlip<br>17 X 1 | | 1 | |
| 6 | 477 521 181 A | spacer sleeve<br>1,00 | | 1 | |
| (6) | 477 521 182 A | spacer sleeve<br>2,00 | | X | |
| (6) | 477 521 183 A | spacer sleeve<br>3,00 | | X | |
| (6) | 477 521 184 A | spacer sleeve<br>4,00 | | X | |
| (6) | 477 521 185 A | spacer sleeve<br>5,00 | | X | |
| (6) | 477 521 186 A | spacer sleeve<br>6,00 | | X | |
| (6) | 477 521 187 A | spacer sleeve<br>7,00 | | X | |
| (6) | 477 521 188 A | spacer sleeve<br>8,00 | | X | |
| (6) | 477 521 189 A | spacer sleeve<br>9,00 | | X | |
| 7 | E 477 521 130 C | central tube<br>ready for installation | | 1 | |
| 8 | 477 521 247 D | terminal | | 1 | |

| Pos | Part Number | Name | Remarks | Qty | Model | Pos | Part Number | Name | Remarks | Qty | Model |
|---|---|---|---|---|---|---|---|---|---|---|---|
| 9 | 477 521 110 C | converter mounting | | 1 | | | | | | | |
| 10 | 900 027 016 02 | lock ring<br>B 10 | | 4 | | | | | | | |
| 11 | N 010 275 4 | hexagon-head bolt<br>M 10 X 35 | | 4 | | | | | | | |
| 12 | 477 521 277 C | cap | | 1 | | | | | | | |
| 13 | 900 075 029 09 | hexagon-head bolt<br>M 8 X 25 | | 4 | | | | | | | |
| 14 | N 012 241 11 | spring washer<br>B 8 X 15 | | 4 | | | | | | | |
| 15 | N 010 185 3 | hexagon-head bolt<br>M 12 X 80 | | 2 | | | | | | | |
| 16 | N 040 240 2 | hexagon-head bolt<br>M 10 X 50 | | 1 | | | | | | | |
| 17 | N 012 690 1 | grooved pin<br>10 X 32 | | 3 | | | | | | | |
| 18 | 477 521 213 | cover | | 1 | | | | | | | |
| 19 | 477 521 214 | gasket | | 1 | | | | | | | |
| 20 | 999 591 327 02 | speed nut<br>B 6,3 X 23 | | 1 | | | | | | | |
| 21 | N 013 947 3 | oval-head screw<br>6,3 X 19 | | 1 | | | | | | | |
| 22 | 003 323 699 A | hexagon-head bolt | | 3 | | | | | | | |
| 23 | N 012 038 1 | lock ring<br>A 8 | | 6 | | | | | | | |
| 24 | N 010 239 11 | hexagon-head bolt<br>M 8 X 18 | | 6 | | | | | | | |
| | | - -- E N D -- - | | | | | | | | | |

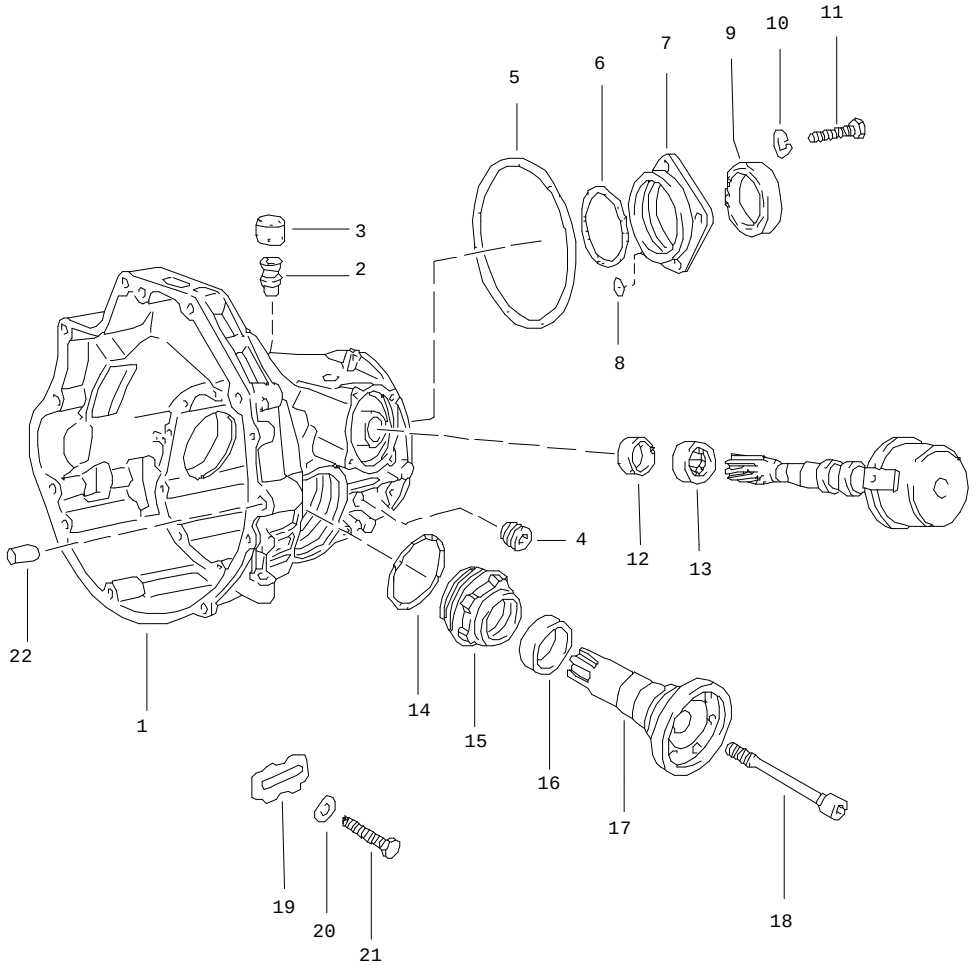


| Pos | Part Number | Name | Remarks | Qty | Model |
|---|---|---|---|---|---|
| | | replacement transmission<br>final-drive housing<br>automatic transmission | | | 924 |
| - | > 087 300 035 M | replacement transmission<br>ready for installation | | 1 | RK |
| - | > 087 300 038 B | replacement transmission<br>right-hand drive<br>ready for installation | 10/82- | 1 | RCC |
| 1 | 087 409 051 H | final-drive housing | | 1 | |
| 2 | 010 409 847 | breather pipe | | 2 | |
| 3 | 087 409 841 | cap | | 2 | |
| 4 | 111 301 127 E | screw plug<br>M 24 X 1,5 | | 1 | |
| 5 | * 010 409 549 B | round seal | | 1 | |
| 6 | * 087 409 549 | round seal | | 1 | |
| 7 | 087 409 623 A | cover | | 1 | |
| 8 | * 089 409 637 A | sealing ring | | 1 | |
| 9 | * 087 409 529 B | radial shaft seal | | 2 | |
| 10 | N 012 028 1 | lock ring | | 5 | |
| 11 | 900 075 111 08 | hexagon-head bolt<br>M 10 X 30 | | 5 | |
| 12 | * 087 409 133 | radial shaft seal | | 1 | |
| 13 | 082 409 139 | needle-roller bearing | | 1 | |
| 14 | * 011 519 345 | round seal | | 2 | |
| 15 | 087 409 173 | adjusting ring | | 2 | |
| 16 | * 016 409 399 B | radial shaft seal | | 1 | |
| 17 | 087 409 355 | flanged shaft | /L | 1 | |
| (17) | 087 409 356 | flanged shaft | /R | 1 | |
| 18 | 087 409 359 | screw | /L | 1 | |
| (18) | 087 409 360 | screw | /R | 1 | |
| 19 | 010 409 257 | tab washer | | 2 | |

| Pos | Part Number | Name | Remarks | Qty | Model | Pos | Part Number | Name | Remarks | Qty | Model |
|---|---|---|---|---|---|---|---|---|---|---|---|
| 20 | N 012 226 5 | spring washer<br>B 6 | | 2 | | | | | | | |
| 21 | N 010 215 13 | hexagon-head bolt<br>M 6 X 15 | | 2 | | | | | | | |
| 22 | 019 301 153 | dowel sleeve | | 2 | | | | | | | |
| | | - -- E N D -- - | | | | | | | | | |

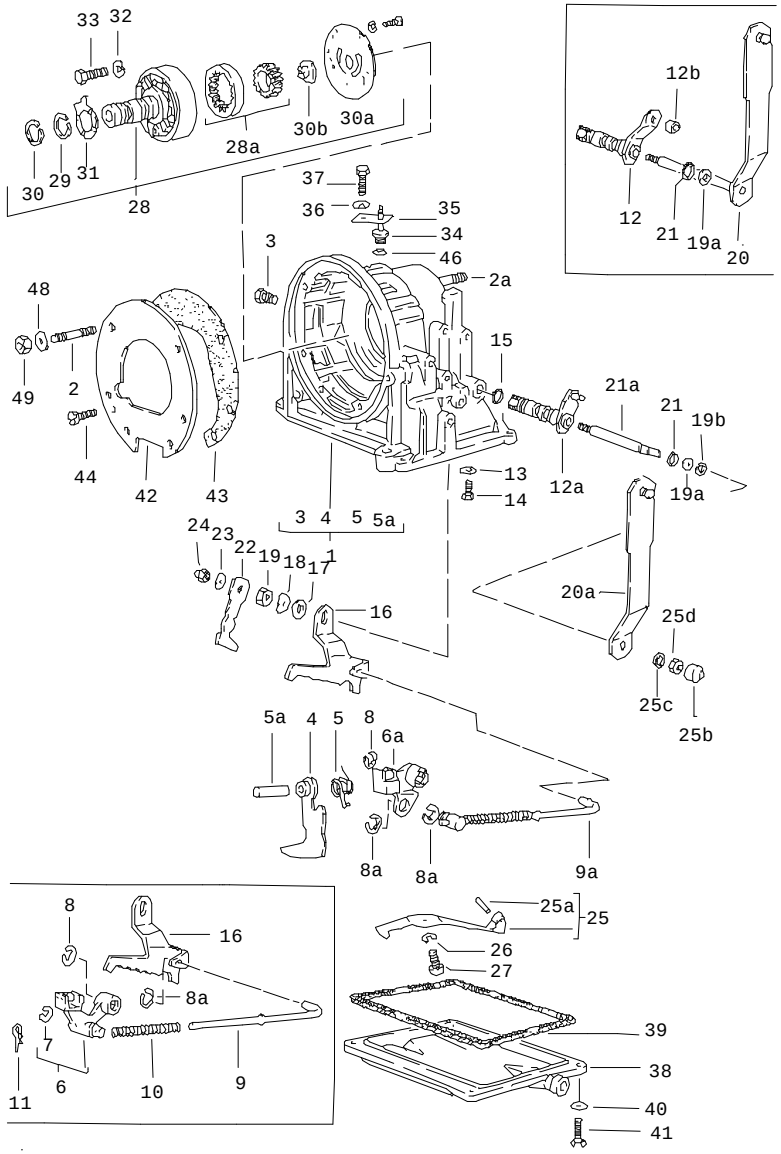


| Pos | Part Number | Name | Remarks | Qty | Model |
|---|---|---|---|---|---|
| | | transmission case<br>automatic transmission | | | 924 |
| 1 | 010 321 101 G | transmission case | | 1 | |
| 2 | N 900 044 02 | stud<br>AM 8A X 56 | | 4 | |
| 2A | E N 014 523 2 | stud<br>AM 10A X 38 | | 2 | |
| 3 | 003 507 133 A | screw plug<br>M 10 X 1 | | 3 | |
| 4 | 010 321 117 B | lever<br>parking lock | | 1 | |
| 5 | 010 321 121 A | torsion spring | | 1 | |
| 5A | 010 321 123 | bolt | | 1 | |
| 6 | E 010 321 135 A | engaging lever<br>parking lock<br>G >> RK 21 05 0 | | 1 | |
| 6A | 010 321 135 | engaging lever<br>parking lock<br>G RK 22 05 0 >><br>G RCC -- | <br><br>-82<br>83 | 1 | <br><br><br>(GB) |
| 7 | 900 116 003 02 | circlip<br>4 | | 1 | |
| 8 | E N 012 438 1 | lock washer<br>9 | | 1 | |
| 8A | N 012 436 2 | lock washer<br>6 | | 2 | |
| 9 | 010 321 155 | operating rod<br>G >> RK 21 05 0 | | 1 | |
| 9A | 010 321 153 | operating rod<br>G RK 22 05 0 >> RK 18 08 1 | | 1 | |
| (9A) | 010 321 153 A | operating rod<br>G RK 19 08 1 >><br>G RCC -- | <br>-82<br>83- | 1 | <br><br>(GB) |
| 10 | E 010 321 159 | compression spring<br>G >> RK 21 05 0 | | 1 | |
| 11 | E 010 321 161 | securing clip<br>G >> RK 21 05 0 | | 1 | |

| Pos | Part Number | Name | Remarks | Qty | Model |
|---|---|---|---|---|---|
| 12 | 087 321 173 A | lever<br>for cable control<br>G >> RK 03 10 0 | | 1 | |
| 12A | 087 321 171 C | lever<br>for cable control<br>G RK 06 10 0 >><br>G RCC -- | <br><br>-82<br>83- | 1 | <br><br><br>(GB) |
| 12B | 003 321 177 | bush<br>G >> RK 03 10 0 | | 1 | |
| 13 | N 012 226 5 | spring washer<br>B 6 | | 1 | |
| 14 | N 010 224 1 | hexagon-head bolt<br>M 6 X 3,5 | | 1 | |
| 15 | * N 028 201 2 | round seal | | X | |
| 16 | 010 321 191 A | locking segment<br>G >> RK 18 08 1 | | 1 | |
| (16) | 010 321 193 B | locking segment<br>G RK 19 08 1 >><br>G RCC -- | <br>-82<br>83- | 1 | <br><br>(GB) |
| 17 | 211 611 179 | washer<br>A 16 | | 1 | |
| 18 | N 012 238 5 | spring washer<br>B 16 | | 1 | |
| 19 | N 011 164 2 | hexagon nut<br>M 16 X 1,5 | | 1 | |
| 19A | 010 321 180 | support ring<br>G >> RK 10 10 9 | | 1 | |
| 19A | 010 321 180 B | support washer<br>G RK 11 10 9 >><br>G RCC -- | <br>-82<br>83- | 1 | <br><br>(GB) |
| 19B | N 023 641 1 | circlip<br>A 10 X 1<br>G RK 11 10 9 >><br>G RCC -- | <br><br>-82<br>83- | 1 | <br><br><br>(GB) |
| 20 | 087 321 201 | lever<br>for cable control<br>G >> RK 10 10 9 | | 1 | |
| 20A | E 087 321 201 D | lever<br>for cable control<br>G RK 11 10 9 >><br>G RCC -- | <br><br>-82<br>83- | 1 | <br><br><br>(GB) |
| 21 | * 010 321 182 | round seal | | 1 | |
| 21A | 010 321 209 C | shaft<br>f.accelerator cable<br>G RK 11 10 9 >><br>G RCC -- | <br><br>-82<br>83- | 1 | <br><br><br>(GB) |
| 22 | 010 321 215 C | lever<br>kickdown control<br>G >> RK 16 07 0 | | 1 | |
| (22) | 010 321 215 E | lever<br>kickdown control<br>G RK 17 07 0 >><br>G RCC -- | <br><br>-82<br>83- | 1 | <br><br><br>(GB) |
| 23 | N 012 228 3 | spring washer<br>B 8 | | 1 | |
| 24 | N 011 008 8 | hexagon nut<br>M 8 | | 1 | |
| 25 | 010 321 221 | leaf spring | | 1 | |
| 25A | E N 013 325 1 | tensioning sleeve<br>6 X 22 | | 1 | |
| 25B | 010 321 227 | protection cap<br>G RK 11 10 9 >><br>G RCC -- | <br>-82<br>83- | 1 | <br><br>(GB) |
| 25C | 010 321 229 | spacer<br>G RK 11 10 9 >><br>G RCC -- | <br>-82<br>83- | 1 | <br><br>(GB) |
| 25D | N 011 137 1 | hexagon nut<br>M 10 X 1<br>G RK 11 10 9 >><br>G RCC -- | <br><br>-82<br>83- | 1 | <br><br><br>(GB) |
| 26 | N 012 038 1 | lock ring<br>B 8 | | 1 | |
| 27 | N 010 239 11 | hexagon-head bolt<br>M 8 X 18 | | 1 | |
| 28 | 010 321 241 F | oil pump | | 1 | |

| Pos | Part Number | Name | Remarks | Qty | Model |
|---|---|---|---|---|---|
| 28A | 003 321 263 | gear set<br>oil pump | | 1 | |
| 29 | 003 321 261 | piston ring | | 2 | |
| 30 | 010 321 261 | piston ring | | 2 | |
| 30A | 010 321 279 | plate | | 1 | |
| 30B | 003 321 273 | driver | | 1 | |
| 31 | 010 321 285 | thrust washer | | 1 | |
| 32 | N 012 006 4 | lock ring<br>B 6 | | 5 | |
| 33 | N 010 339 3 | hexagon-head bolt<br>M 6 X 40 | | 5 | |
| 34 | 477 321 303 A | cover | | 1 | |
| 35 | 011 321 307 | clip | | 1 | |
| 36 | N 012 226 5 | spring washer<br>B 6 | | 1 | |
| 37 | 999 072 005 09 | hexagon-head bolt<br>M 6 X 12 | | 1 | |
| 38 | 010 321 359 F | oil pan | | 1 | |
| 39 | * 010 321 371 B | gasket | | 1 | |
| 40 | N 012 038 1 | lock ring<br>A 8 | | 4 | |
| 41 | N 010 240 16 | hexagon-head bolt<br>M 8 X 20 | | 4 | |
| 42 | E 010 321 383 B | intermediate plate | | 1 | |
| 43 | * 010 321 385 B | gasket | | 2 | |
| 44 | E 900 014 004 02 | pan-head screw<br>AM 5 X 15 | | 1 | |
| 46 | * 003 321 419 | round seal | | 1 | |
| 48 | N 012 228 3 | spring washer<br>B 8 | | 4 | |
| 49 | N 011 008 8 | hexagon nut<br>M 8 | | 4 | |

| Pos | Part Number | Name | Remarks | Qty | Model |
|---|---|---|---|---|---|
| | | - -- E N D -- - | | | |

| Model | Year | MG | SG | Illustration | Restrictions | Update | | | | |
|---|---|---|---|---|---|---|---|---|---|---|
| 924 | 85 | 3 | 09 | 309-05 | | 179 | 10:02 | 16.08.2004 | PORSCHE | PET | PORSCHE |

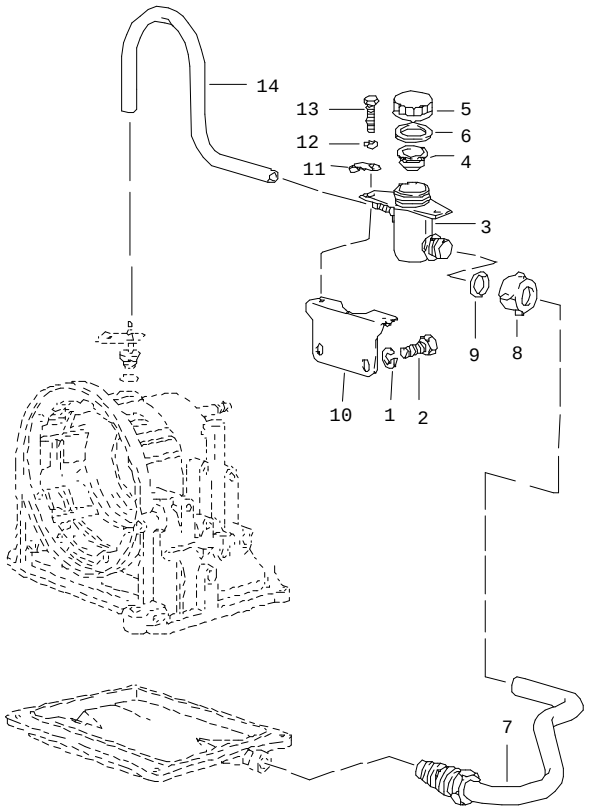


| Pos | Part Number | Name | Remarks | Qty | Model |
|---|---|---|---|---|---|
| | | oil inlet<br>automatic transmission | | | 924 |
| 1 | N 012 028 1 | lock ring<br>B 10 | | 2 | |
| 2 | N 010 253 7 | hexagon-head bolt<br>M 10 X 22 | | 2 | |
| 3 | 477 321 475 | container | | 1 | |
| 4 | 477 321 479 A | strainer | | 1 | |
| 5 | 477 321 481 | cap | | 1 | |
| 6 | 477 321 483 A | gasket | | 1 | |
| 7 | 477 321 405 | filler tube | | 1 | |
| 8 | 477 321 485 | union nut | | 1 | |
| 9 | 477 321 487 | o-ring | | 2 | |
| 10 | 477 321 491 | support | | 1 | |
| 11 | 477 321 494 | packing plate | | 2 | |
| 12 | N 012 226 5 | spring washer<br>B 6 | | 2 | |
| 13 | N 010 215 13 | hexagon-head bolt<br>M 6 X 15 | | 2 | |
| 14 | 477 321 495 | hose<br>340 MM | | 1 | |
| | | - -- E N D -- - | | | |

| Model | Year | MG | SG | Illustration | Restrictions | Update | | | | |
|---|---|---|---|---|---|---|---|---|---|---|
| 924 | 85 | 3 | 10 | 310-00 | | 179 | 10:02 | 16.08.2004 | PORSCHE | PET | PORSCHE |

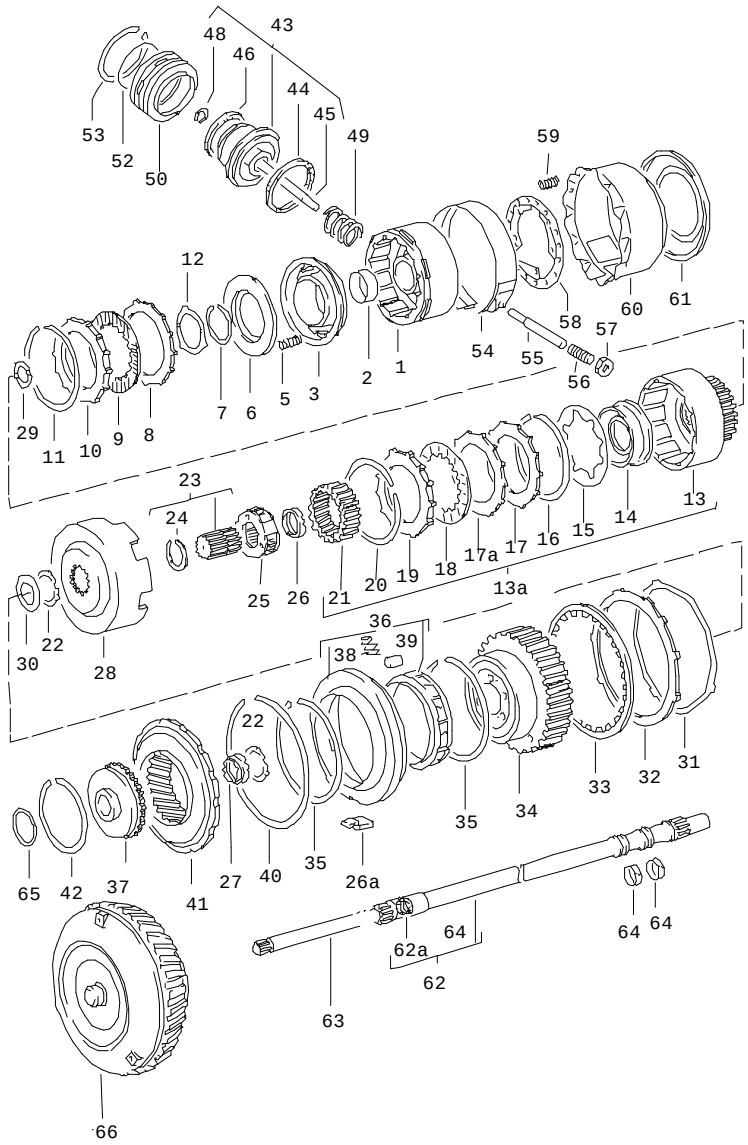


| Pos | Part Number | Name | Remarks | Qty | Model |
|---|---|---|---|---|---|
| | | transmission parts<br>automatic transmission | | | 924 |
| 1 | 010 323 109 C | clutch drum | | 1 | RK RL |
| (1) | 010 323 109 F | clutch drum<br>G >>RCC 01 08 3 | | 1 | RCC |
| (1) | 087 323 109 | clutch drum<br>G RCC 02 08 3>> | | 1 | RCC |
| 2 | 010 323 115 | bearing sleeve | | 1 | |
| 3 | 010 323 121 B | piston | | 1 | |
| 5 | 010 323 129 A | compression spring | | 24 | |
| 6 | 010 323 131 A | concave washer | | 1 | |
| 7 | 003 323 135 A | circlip | | 1 | |
| 8 | 010 323 139 | disc with external splines | | 4 | RK RL |
| (8) | 010 323 139 A | disc with external splines<br>G >>RCC 01 08 3 | | 4 | RCC |
| (8) | 087 323 139 | disc with external splines<br>G RCC 02 08 3>> | | 4 | RCC |
| 9 | 010 323 141 C | disc with external splines<br>G >>RCC 01 08 3 | | 4 | |
| (9) | 087 323 141 A | disc with external splines<br>G RCC 02 08 3>> | | 4 | RCC |
| 10 | 010 323 153 | pressure plate<br>G >>RCC 01 08 3 | | 1 | |
| (10) | 087 323 153 | pressure plate<br>G RCC 02 08 3>> | | 1 | RCC |
| 11 | 010 323 157 | circlip<br>2,03<br>G >>RCC 01 08 3 | | 1 | |
| (11) | 087 323 157 B | circlip<br>2,03 MM<br>G RCC 02 08 3>> | | 1 | RCC |
| (11) | 010 323 157 A | circlip<br>1,50 MM<br>G >>RCC 01 08 3 | | X | |

| Pos | Part Number | Name | Remarks | Qty | Model |
|---|---|---|---|---|---|
| (11) | 087 323 157 | circlip<br>1,50 MM<br>G RCC 02 08 3>> | | X | RCC |
| (11) | E 010 323 157 B | circlip<br>1,70 MM<br>G >>RCC 01 08 3 | | X | |
| (11) | 087 323 157 A | circlip<br>1,70 MM<br>G RCC 02 08 3>> | | X | RCC |
| (11) | 010 323 157 H | circlip<br>2,30 MM<br>G >>RCC 01 08 3 | | X | |
| (11) | 087 323 157 C | circlip<br>2,30 MM<br>G RCC 02 08 3>> | | X | RCC |
| (11) | 010 323 157 J | circlip<br>2,50 MM<br>G >>RCC 01 08 3 | | X | |
| (11) | 087 323 157 D | circlip<br>2,50 MM<br>G RCC 02 08 3>> | | X | RCC |
| 12 | 010 323 161 A | thrust washer | | 1 | |
| 13A | 010 323 205 | forward clutch<br>G >> RK 02 08 1 | | 1 | |
| 13 | 087 323 209 | clutch bell-housing<br>G RK 03 08 1 >> | | 1 | |
| | | G RCC -- | | 1 | |
| 14 | 010 323 217 A | piston | | 1 | |
| 15 | 010 323 229 D | cup spring<br>forward clutch | | | |
| 16 | 010 323 157 | circlip | | 1 | |
| 17 | 010 323 237 A | pressure plate | | 1 | |
| 17A | 010 323 139 | disc with external splines<br>forward clutch | | 3 | |
| 18 | 010 323 241 B | inner disc | | 4 | |
| 19 | 010 323 253 A | pressure plate<br>6,40 | | 1 | |
| (19) | 010 323 253 B | pressure plate<br>6,80 | | X | |
| (19) | 010 323 253 C | pressure plate<br>7,20 | | X | |
| (19) | 010 323 253 D | pressure plate<br>7,60 | | X | |
| (19) | 010 323 253 F | pressure plate<br>6,00 | | X | |
| 20 | E 010 323 159 B | lock ring | | 1 | |
| 21 | 010 323 273 B | ring gear | | 1 | RK RL |
| 21 | 010 323 273 C | ring gear | | 1 | RCC |
| 22 | 010 323 291 | thrust washer | | 1 | |
| 23 | 010 323 285 E | sun gear | | 1 | RK RL |
| 23 | 010 323 285 F | sun gear | | 1 | RCC |
| 24 | E N 042 451 1 | snap ring<br>A 40 | | 1 | |
| 25 | 010 323 303 | planet-gear carrier | | 1 | RK RL |
| 25 | 010 323 303 E | planet-gear carrier | | 1 | RCC |
| 26 | 010 323 340 D | needle-roller bearing | | 1 | |
| 27 | 010 323 339 D | needle-roller bearing | | 1 | |
| 28 | 010 323 281 | driving shell | | 1 | RK RL |
| 28 | 010 323 281 F | driving shell<br>G >>RCC 01 08 3 | | 1 | RCC |
| 28 | 087 323 281 | driving shell<br>G RCC 02 08 3>> | | 1 | RCC |
| 29 | 003 323 165 | thrust washer<br>40<br>G >> RK 31 07 1 | | 1 | |
| 29 | 010 321 157 A | needle-roller bearing<br>G RK 03 08 1 >><br>G RCC -- | | 1 | |
| 30 | 010 323 293 B | thrust washer | | 1 | RK RL |
| 30 | 010 323 293 C | thrust washer | | 1 | RCC |

| Pos | Part Number | Name | Remarks | Qty | Model |
|---|---|---|---|---|---|
| 31 | 010 323 295 C | spring washer<br>G >> RK 03 03 3<br>G >> RL 03 03 3<br>G >>RCC 03 03 3 | | 1 | |
| 32 | 010 323 227 A | disc with external splines | | 5 | |
| 33 | 010 323 231 C | inner disc | | 5 | |
| 34 | 090 323 805 | planet-gear carrier | | 1 | RK RL |
| 34 | 010 323 805 E | planet-gear carrier | | 1 | RCC |
| 35 | 010 323 651 | circlip | | 2 | |
| 36 | 010 323 383 C | free wheel lock<br>1st gear | | 1 | |
| 36A | 010 323 389 E | key | | 1 | |
| 37 | 087 323 373 A | hub | | 1 | RK RL |
| 37 | 087 323 373 | hub | | 1 | RCC |
| 38 | 010 323 643 | compression spring | | 10 | RK RL |
| 38 | 010 323 643 | compression spring | | 10 | RCC |
| 39 | N 026 360 1 | roller | | 10 | |
| 40 | 010 323 653 A | circlip | | 1 | |
| 41 | 090 323 363 A | ring gear | | 1 | RK RL |
| 41 | 090 323 363 B | ring gear | | 1 | RCC |
| 42 | 090 323 369 | circlip | | 1 | RK RL |
| 42 | 010 323 369 A | circlip | | 1 | RCC |
| 43 | 010 323 511 K | piston<br>G >>RCC 01 08 3 | | 1 | |
| 43 | 087 323 512 A | piston<br>G RCC 02 08 3>> | | 1 | RCC |
| 44 | 003 323 525 A | sealing ring | | 1 | |
| 45 | 010 323 517 D | piston rod<br>G >>RCC 01 08 3 | | 1 | |
| 46 | 010 323 487 C | sealing ring | | 1 | |
| 48 | 010 323 541 B | lock washer | | 1 | |
| 49 | 010 323 505 A | compression spring | | 1 | |
| 50 | 087 323 529 | cover | | 1 | |
| 52 | 010 323 533 | round seal | | 3 | |
| 53 | 010 323 537 A | circlip | | 1 | |
| 54 | 010 323 461 A | brake band | | 1 | |
| 55 | 010 323 543 A | bolt<br>G >>RCC 01 08 3 | | 1 | |
| 55 | 087 323 543 | bolt<br>G RCC 02 08 3>> | | 1 | RCC |
| 56 | 010 323 455 A | adjusting screw | | 1 | |
| 57 | N 011 162 9 | hexagon nut<br>M 12 X 1,5 | | 1 | |
| 58 | 010 323 497 C | supporting plate | | 1 | |
| 59 | 010 323 489 B | compression spring | | 20 | |
| 60 | 010 323 493 A | pipe | | 1 | |
| 60 | 010 323 493 D | pipe<br>G >> RK 03 03 3<br>G >> RL 03 03 3<br>G >>RCC 03 03 3 | | 1 | |
| 60 | E 010 323 493 F | pipe<br>G RK 04 03 3 >><br>G RL 04 03 3 >><br>G RCC 04 03 3>> | | 1 | |
| 61 | 010 323 479 A | piston<br>G >> RK 03 03 3<br>G >> RL 03 03 3<br>G >>RCC 03 03 3 | | 1 | |
| 61 | 010 323 477 | piston<br>G RK 04 03 3 >><br>G RL 04 03 3 >><br>G RCC 04 03 3>> | | 1 | |
| 62 | 087 323 553 A | turbine shaft | | 1 | |
| 62A | 087 323 559 | gasket<br>G RK 30 01 0 >> | | 1 | |
| 63 | 010 323 561 A | oil pump shaft | | 1 | |

| Model | Year | MG | SG | Illustration | Restrictions | Update | | | | |
|---|---|---|---|---|---|---|---|---|---|---|
| 924 | 85 | 3 | 10 | 310-00 | | 179 | 10:02 | 16.08.2004 | PORSCHE | PET | PORSCHE |

| Pos | Part Number | Name | Remarks | Qty | Model | Pos | Part Number | Name | Remarks | Qty | Model |
|---|---|---|---|---|---|---|---|---|---|---|---|
| 64 | 010 323 557 A | piston ring | | 2 | | | | | | | |
| 65 | 010 323 345 C | adjusting shim | | 1 | | | | | | | |
| 65 | 010 323 346 C | adjusting shim | | X | | | | | | | |
| 66 | 082 323 571 | converter | | 1 | | | | | | | |
| | | - -- E N D -- - | | | | | | | | | |

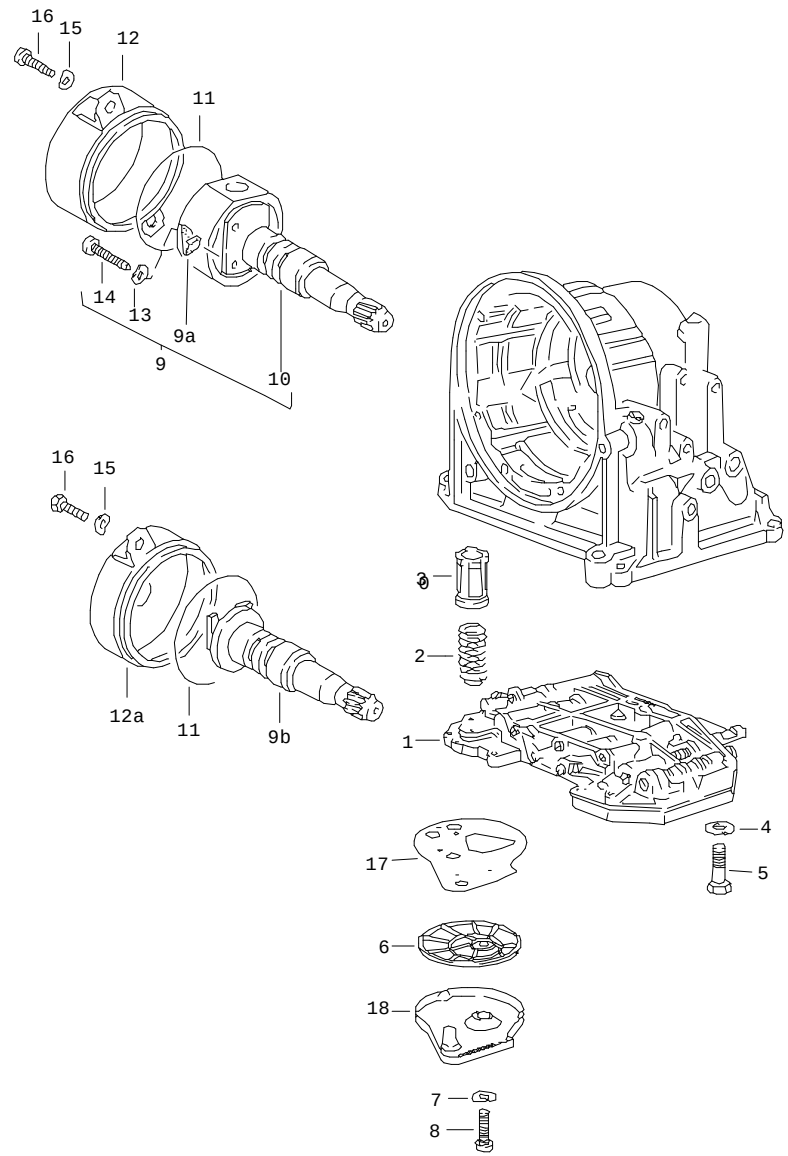


| Pos | Part Number | Name | Remarks | Qty | Model |
|---|---|---|---|---|---|
| | | valve body<br>regulator<br>oil strainer<br>automatic transmission | | | 924 |
| 1 | 087 325 032 H | hydraulic control unit<br>G >> RK 18 08 1 | | 1 | RK |
| 1 | 087 325 032 H | valve body<br>G RK 19 08 1 >> | | 1 | RK |
| | | use also:<br>010.325.277 | | | |
| 1 | 090 325 037 | valve body | 83- | 1 | RCC |
| - | 010 325 277 | manual valve<br>G RK 19 08 1 >> | | 1 | |
| 2 | 003 325 417 | compression spring | | 1 | |
| 3 | 003 325 405 F | piston | | 1 | |
| 4 | N 012 226 5 | spring washer<br>B 6 | | 11 | |
| 5 | N 010 346 5 | hexagon-head bolt<br>M 6 X 30 | | 11 | |
| 6 | 010 325 421 A | oil strainer | | 1 | |
| 7 | N 012 222 4 | spring washer<br>B 5 | | 2 | |
| 8 | E 900 014 004 02 | pan-head screw<br>AM 5 X 15 | | 2 | |
| 9 | 087 325 041 | regulator | | 1 | RK RL |
| 9B | 087 325 041 B | regulator | | 1 | RCC |
| 9A | 010 325 329 | strainer | | 1 | |
| 10 | E 087 325 305 | governor shaft | | 1 | RK RL |
| 11 | * 011 519 345 | round seal | | 1 | |
| 12 | 089 325 371 | cover | | 1 | RK RL |
| 12 | 089 325 371 A | cover | | 1 | RCC |
| 13 | N 012 222 4 | spring washer | | 2 | |

| Pos | Part Number | Name | Remarks | Qty | Model | Pos | Part Number | Name | Remarks | Qty | Model |
|---|---|---|---|---|---|---|---|---|---|---|---|
| 14 | N 014 153 1 | oval-head screw<br>M 5 X 40 | | 2 | | | | | | | |
| 15 | N 012 228 3 | spring washer<br>B 8 | | 2 | | | | | | | |
| 16 | N 010 240 16 | hexagon-head bolt<br>8 X 20 | | 2 | | | | | | | |
| 17 | 010 325 443 | gasket | | 1 | | | | | | | |
| 18 | 010 325 429 A | cover | | 1 | | | | | | | |
| | | - -- E N D -- - | | | | | | | | | |

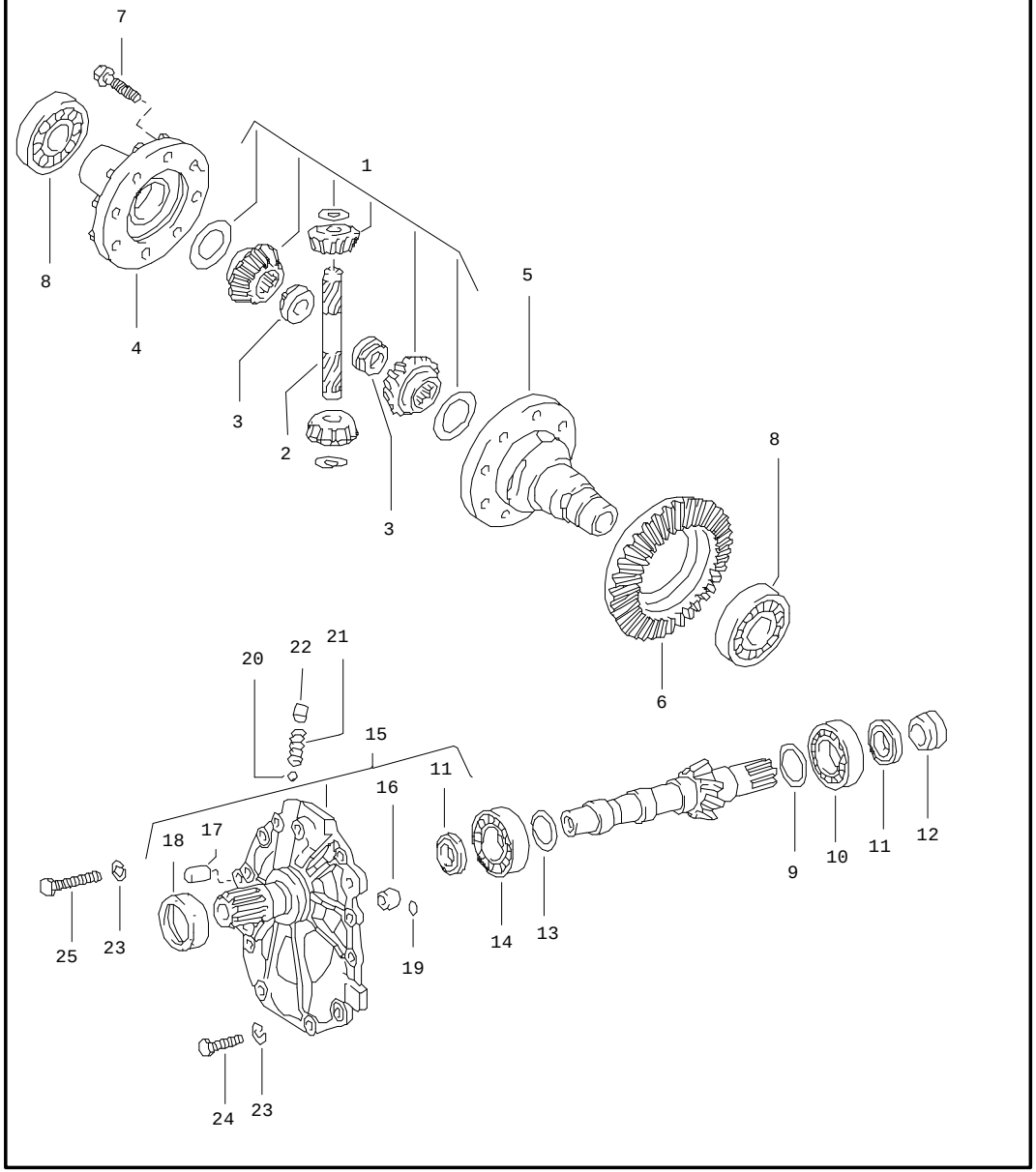


| Pos | Part Number | Name | Remarks | Qty | Model |
|---|---|---|---|---|---|
| | | differential<br>automatic transmission | | | 924 |
| 1 | * 090 598 081 | repair kit<br>differential | | 1 | |
| 2 | 087 409 177 | axle | | 1 | |
| 3 | 016 409 161 | nut | | 2 | |
| 4 | 087 409 365 | cover | | 1 | |
| 5 | 087 409 121 | differential housing | | 1 | |
| 6 | 087 409 143 G | ring gear and pinion shaft<br>11:38 | | 1<br>1 | RK RCC |
| 7 | 087 409 135 A | hexagon-head bolt<br>M 10 X 1 X 24 | | 10 | |
| 8 | 113 517 185 C | taper roller bearing | | 2 | |
| 9 | 087 409 641 D | adjusting shim<br>1,10 | | 1 | |
| (9) | 087 409 641 E | adjusting shim<br>1,125 | | X | |
| (9) | 087 409 641 F | adjusting shim<br>1,15 | | X | |
| (9) | 087 409 641 G | adjusting shim<br>1,175 | | X | |
| (9) | 087 409 641 H | adjusting shim<br>1,20 | | X | |
| (9) | 087 409 641 J | adjusting shim<br>1,225 | | X | |
| (9) | 087 409 641 K | adjusting shim<br>1,25 | | X | |
| (9) | 087 409 641 L | adjusting shim<br>1,275 | | X | |
| (9) | 087 409 641 M | adjusting shim<br>1,30 | | X | |
| (9) | 087 409 641 N | adjusting shim<br>1,325 | | X | |
| (9) | 087 409 641 P | adjusting shim<br>1,35 | | X | |

| Pos | Part Number | Name | Remarks | Qty | Model |
|---|---|---|---|---|---|
| (9) | 087 409 641 Q | adjusting shim 1,375 | | X | |
| (9) | 087 409 641 R | adjusting shim 1,40 | | X | |
| (9) | 087 409 641 S | adjusting shim 1,425 | | X | |
| (9) | 087 409 641 T | adjusting shim 1,45 | | X | |
| (9) | 087 409 641 AA | adjusting shim 1,475 | | X | |
| (9) | 087 409 641 AB | adjusting shim 1,50 | | X | |
| (9) | 087 409 641 AC | adjusting shim 1,525 | | X | |
| (9) | 087 409 641 AD | adjusting shim 1,55 | | X | |
| (9) | 087 409 641 AE | adjusting shim 1,575 | | X | |
| (9) | 087 409 641 AF | adjusting shim 1,60 | | X | |
| (9) | 087 409 641 AG | adjusting shim 1,625 | | X | |
| (9) | 087 409 641 AH | adjusting shim 1,65 | | X | |
| (9) | 087 409 641 AJ | adjusting shim 1,675 | | X | |
| (9) | 087 409 641 AK | adjusting shim 1,70 | | X | |
| (9) | 087 409 641 AL | adjusting shim 1,725 | | X | |
| (9) | 087 409 641 AM | adjusting shim 1,75 | | X | |
| (9) | 087 409 641 AN | adjusting shim 1,775 | | X | |
| (9) | 087 409 641 AP | adjusting shim 1,80 | | X | |
| (9) | 087 409 641 AQ | adjusting shim 1,825 | | X | |
| (9) | 087 409 641 AR | adjusting shim 1,85 | | X | |
| (9) | 087 409 641 AS | adjusting shim 1,875 | | X | |
| (9) | 087 409 641 AT | adjusting shim 1,90 | | X | |
| 10 | 087 409 551 C | taper roller bearing | | 1 | |
| 11 | 087 409 085 B | radial shaft seal | | 2 | |
| 12 | 087 409 639 A | bush | | 1 | |
| 13 | 082 519 141 AE | adjusting shim 1,10 | | 1 | |
| (13) | 082 519 141 AF | adjusting shim 1,125 | | X | |
| (13) | 082 519 141 AG | adjusting shim 1,15 | | X | |
| (13) | 082 519 141 AH | adjusting shim 1,175 | | X | |
| (13) | 082 519 141 AJ | adjusting shim 1,20 | | X | |
| (13) | 082 519 141 AK | adjusting shim 1,225 | | X | |
| (13) | 082 519 141 AL | adjusting shim 1,25 | | X | |
| (13) | 082 519 141 AM | adjusting shim 1,275 | | X | |
| (13) | 082 519 141 AN | adjusting shim 1,30 | | X | |
| (13) | 082 519 141 AP | adjusting shim 1,325 | | X | |
| (13) | 082 519 141 AQ | adjusting shim 1,35 | | X | |
| (13) | 082 519 141 AR | adjusting shim 1,375 | | X | |

| Pos | Part Number | Name | Remarks | Qty | Model |
|---|---|---|---|---|---|
| (13) | 082 519 141 AS | adjusting shim<br>1,40 | | X | |
| (13) | 082 519 141 AT | adjusting shim<br>1,425 | | X | |
| (13) | 082 519 141 BA | adjusting shim<br>1,45 | | X | |
| (13) | 082 519 141 BB | adjusting shim<br>1,475 | | X | |
| (13) | 082 519 141 BC | adjusting shim<br>1,50 | | X | |
| (13) | 082 519 141 BD | adjusting shim<br>1,525 | | X | |
| (13) | 082 519 141 BE | adjusting shim<br>1,550 | | X | |
| (13) | 082 519 141 BF | adjusting shim<br>1,575 | | X | |
| (13) | 082 519 141 BG | adjusting shim<br>1,60 | | X | |
| (13) | 082 519 141 BH | adjusting shim<br>1,625 | | X | |
| (13) | 082 519 141 BJ | adjusting shim<br>1,650 | | X | |
| (13) | 082 519 141 BK | adjusting shim<br>1,675 | | X | |
| (13) | 082 519 141 BL | adjusting shim<br>1,70 | | X | |
| (13) | 082 519 141 BM | adjusting shim<br>1,725 | | X | |
| (13) | 082 519 141 BN | adjusting shim<br>1,750 | | X | |
| (13) | 082 519 141 BP | adjusting shim<br>1,775 | | X | |
| (13) | 082 519 141 BQ | adjusting shim<br>1,80 | | X | |
| (13) | 082 519 141 BR | adjusting shim<br>1,825 | | X | |
| (13) | 082 519 141 BS | adjusting shim<br>1,850 | | X | |
| (13) | 082 519 141 BT | adjusting shim<br>1,875 | | X | |
| (13) | 082 519 141 CA | adjusting shim<br>1,90 | | X | |
| 14 | 003 519 251 | taper roller bearing | | 1 | |
| 15 | 087 409 523 B | cover | | 1 | |
| 16 | 019 301 153 | dowel sleeve | | 1 | |
| 17 | N 022 301 1 | straight pin<br>A 10 X 20 | | 1 | |
| 18 | * 010 409 568 | radial shaft seal | | 1 | |
| 19 | 089 409 637 A | sealing ring | | 2 | |
| 20 | N 025 657 1 | ball | | 1 | |
| 21 | 089 409 713 | spring | | 1 | |
| 22 | 087 409 095 | cover | | 2 | |
| 23 | N 012 038 1 | lock ring<br>A 8 | | 11 | |
| 24 | N 010 233 6 | hexagon-head bolt<br>M 8 X 28 | | 9 | |
| 25 | N 040 276 1 | hexagon-head bolt<br>M 8 X 52 | | 2 | |
| | | - -- E N D -- - | | | |

| Model | Year | MG | SG | Illustration | Restrictions | Update | | | |
|---|---|---|---|---|---|---|---|---|---|
| 924 | 85 | 3 | 12 | 312-00 | | 179 | 10:03 | 16.08.2004 | PORSCHE PET PORSCHE |

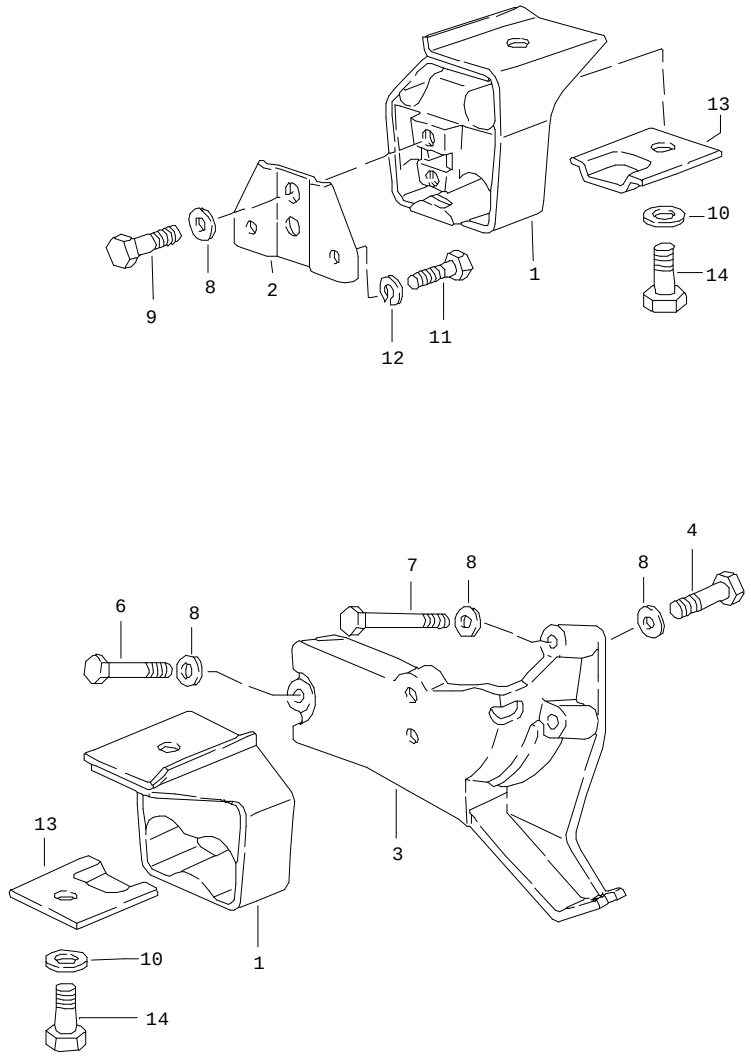


| Pos | Part Number | Name | Remarks | Qty | Model |
|---|---|---|---|---|---|
| | | transmission suspension<br>automatic transmission | | | 924 |
| 1 | 477 399 153 J | transmission mounting | | 2 | |
| 2 | 477 399 169 C | suspension plate | /R | 1 | |
| 3 | 477 399 171 E | bracket | /L | 1 | |
| 4 | N 010 244 11 | hexagon-head bolt<br>M 8 X 30 | | 2 | |
| 6 | N 040 262 2 | hexagon-head bolt<br>M 8 X 50 | | 2 | |
| 7 | N 010 385 3 | hexagon-head bolt<br>M 8 X 85 | | 1 | |
| 8 | N 011 525 13 | washer<br>A 8,4 | | 7 | |
| 9 | N 010 242 12 | hexagon-head bolt<br>M 8 X 25 | | 1 | |
| 10 | 900 025 008 09 | washer<br>A 10,5 | | 2 | |
| 11 | N 010 240 7 | hexagon-head bolt<br>M 8 X 20 | | 2 | |
| 12 | N 012 009 3 | lock ring<br>A 8 | | 2 | |
| 13 | 477 399 281 | stop plate | | 2 | |
| 14 | N 010 254 6 | hexagon-head bolt<br>M 10 X 25 | | 2 | |
| | | - -- E N D -- - | | | |

| Model | Year | MG | SG | Illustration | Restrictions | Update | | |
|---|---|---|---|---|---|---|---|---|
| 924 | 85 | 3 | 98 | REP | | 179 | 10:44 | 16.08.2004 |

| Pos | Part Number | Name | Remarks | Qty | Model |
|---|---|---|---|---|---|
| | | repair kits | | | |
| >> | > 477 300 912 | set of seals for transmission comprising: | 80 | 1 | 924 VQ VR UV |
| - | 088 301 699 A | sealing ring | | 1 | |
| - | 928 303 120 01 | shaft seal | | 1 | |
| - | 016 409 399 B | radial shaft seal | | 2 | |
| - | 113 301 185 A | sealing ring | | 1 | |
| - | E 016 301 235 B | gasket | | 1 | |
| - | 088 311 599 | sealing ring | | 2 | |
| - | 999 113 275 40 | shaft seal | | 1 | |
| - | 016 301 455 | gasket | | 1 | |
| >> | > 477 300 912 A | set of seals for transmission comprising: | 81- | 1 | 924 MD ME MF |
| - | 088 301 699 A | sealing ring | | 1 | |
| - | 928 303 120 01 | shaft seal | | 1 | |
| - | 016 409 399 B | radial shaft seal | | 2 | |
| - | 113 301 185 A | sealing ring | | 1 | |
| - | 016 301 235 C | gasket | | 1 | |
| - | 088 311 599 | sealing ring | | 2 | |
| - | 999 113 275 40 | shaft seal | | 1 | |
| - | 016 301 455 A | gasket | | 1 | |
| - | 005 311 599 | sealing washer | | 1 | |
| >> | > 931 300 911 00 | set of seals for transmission comprising: | | 1 | TURBO G31.01/02/03 |
| - | 999 113 183 40 | radial shaft seal | | 2 | |
| - | 477 301 191 A | gasket | | 1 | |
| - | 001 301 227 | radial shaft seal | | 1 | |
| - | 999 113 247 40 | radial shaft seal | | 1 | |
| - | 999 701 392 40 | o-ring | | 1 | |

| Model | Year | MG | SG | Illustration | Restrictions | Update | | |
|---|---|---|---|---|---|---|---|---|
| 924 | 85 | 3 | 98 | REP | | 179 | 10:44 | 16.08.2004 |

| Pos | Part Number | Name | Remarks | Qty | Model |
|---|---|---|---|---|---|
| >> | > 477 398 001 | set of seals<br>for<br>automatic transmission<br>comprising: | | 1 | 924 RK RL<br>RCC |
| - | 010 321 182 | round seal | | 1 | |
| - | 010 321 371 B | gasket | | 1 | |
| - | 010 321 385 B | gasket | | 1 | |
| - | 003 321 419 | round seal | | 2 | |
| - | 010 323 117 | sealing ring | | 1 | |
| - | 010 323 119 | sealing ring | | 1 | |
| - | 010 323 487 C | sealing ring | | 1 | |
| - | 003 323 525 A | sealing ring | | 1 | |
| - | 010 323 533 | round seal | | 3 | |
| - | 087 409 085 B | radial shaft seal | | 2 | |
| - | 087 409 133 | radial shaft seal | | 1 | |
| - | 016 409 399 B | radial shaft seal | | 2 | |
| - | 087 409 529 B | radial shaft seal | | 2 | |
| - | 010 409 549 B | round seal | | 1 | |
| - | 087 409 549 | round seal | | 1 | |
| - | 010 409 568 | radial shaft seal | | 1 | |
| - | 089 409 637 A | sealing ring | | 1 | |
| - | 011 519 345 | round seal | | 3 | |
| - | N 028 201 2 | round seal | | 1 | |
| >> | > 090 598 081 | repair kit<br><br>differential<br><br>comprising:<br>differential pinions<br>large<br>differential pinions<br>small | | 1<br><br><br><br><br>2<br><br>2 | RK RL VQ<br>RCC VR<br>UV<br>MD ME MF<br>MB MX |
| - | 011 519 215 | thrust washer<br>for<br>differential pinions<br>large | | 2 | |

| Model | Year | MG | SG | Illustration | Restrictions | Update | | |
|---|---|---|---|---|---|---|---|---|
| 924 | 85 | 3 | 98 | REP | | 179 | 10:44 | 16.08.2004 |

| Pos | Part Number | Name | Remarks | Qty | Model |
|---|---|---|---|---|---|
| - | 016 409 170 | thrust washer<br>for<br>differential pinions<br>small<br>use also:<br>088.409.249 A<br>088.409.249 B | | 2 | |
| >> | > 928 116 901 00 | repair kit<br>clutch operating cylinder<br>comprising:<br>bellows<br>lock washer<br>boot<br>dust boot<br>ring | | 1<br><br><br>1<br>1<br>1<br>1<br>2 | TURBO<br>G31.01/02/03 |
| | | - -- E N D -- - | | | |

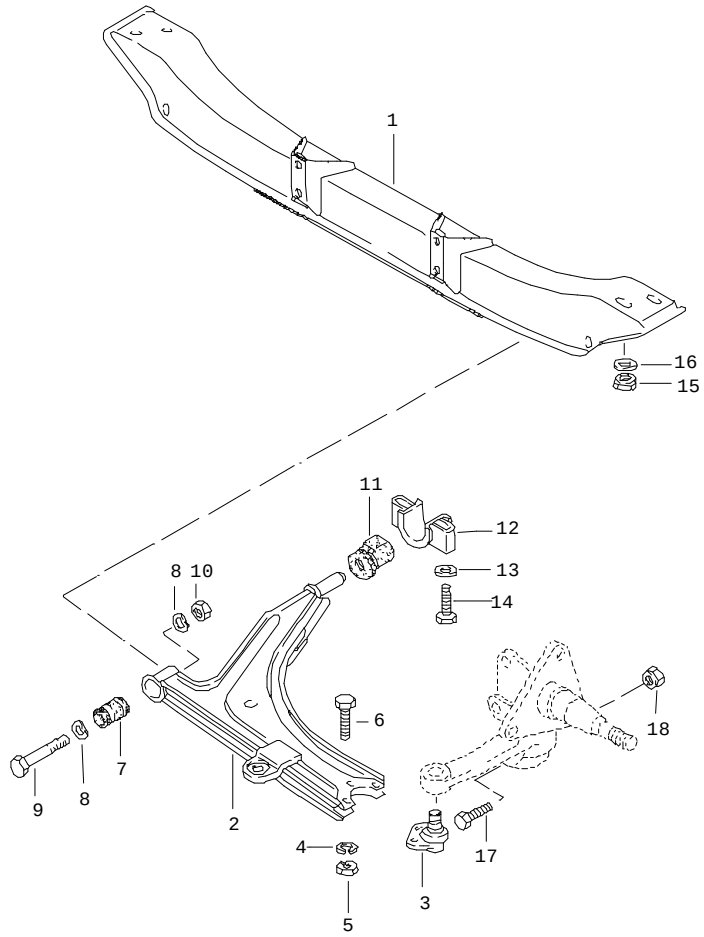


| Pos | Part Number | Name | Remarks | Qty | Model |
|---|---|---|---|---|---|
| | | cross member<br>control arm | | | |
| 1 | 477 407 321 G | cross member | /LL | 1 | |
| 1 | 477 407 321 G | cross member | /RL | 1 | 924 |
| (1) | 478 407 321 | cross member | /RL | 1 | TURBO,GT |
| 2 | 477 407 153 F | control arm<br>F >>92CN4 02197<br>F >>93CN1 00305 | | 2 | 924<br>TURBO |
| (2) | 171 407 153 D | control arm<br>F 92CN4 02198>><br>F 93CN1 00306>> | | 2 | 924<br>TURBO |
| - | 477 407 151 J | control arm<br>with<br>POS. 2,3,7,11 | /L -81 | 1 | |
| - | 477 407 152 J | control arm<br>with<br>POS. 2,3,7,11 | /R -81 | 1 | |
| 3 | 171 407 365 G | ball joint<br>17 MM $ | | 2 | |
| 4 | N 042 001 1 | lock ring<br>A 7 | | 6 | |
| 5 | N 011 007 7 | hexagon nut<br>M 7 | | 6 | |
| 6 | N 040 204 3 | hexagon-head bolt<br>M 7 X 20 | | 6 | |
| 7 | 171 407 182 D | rubber mounting | | 2 | |
| 8 | N 012 232 5 | spring washer<br>B 12 | | 4 | |
| 9 | N 010 190 4 | hexagon-head bolt<br>M 12 X 1,5 X 90 | | 2 | |
| 10 | N 021 131 1 | lock nut<br>M 12 X 1,5 | | 2 | |
| 11 | 477 407 181 A | rubber mounting | | 2 | |
| 12 | 477 407 169 | clip | | 2 | |
| 13 | 477 407 425 | washer | | 4 | |

| Pos | Part Number | Name | Remarks | Qty | Model | Pos | Part Number | Name | Remarks | Qty | Model |
|---|---|---|---|---|---|---|---|---|---|---|---|
| 14 | N 040 321 1 | hexagon-head bolt<br>M 10 X 65 | | 4 | | | | | | | |
| 15 | N 011 185 6 | hexagon nut<br>M 10 | | 4 | | | | | | | |
| 16 | N 015 402 1 | washer<br>10,5 | | 4 | | | | | | | |
| 17 | N 010 445 6 | hexagon-head bolt<br>M 10 X 45 | | 2 | | | | | | | |
| 18 | N 021 130 2 | lock nut<br>M 10 | | 2 | | | | | | | |
| | | - -- E N D -- - | | | | | | | | | |

| Model | Year | MG | SG | Illustration | Restrictions | Update | | | | |
|---|---|---|---|---|---|---|---|---|---|---|
| 924 | 85 | 4 | 01 | 401-05 | | 179 | 10:03 | 16.08.2004 | PORSCHE | PET | PORSCHE |

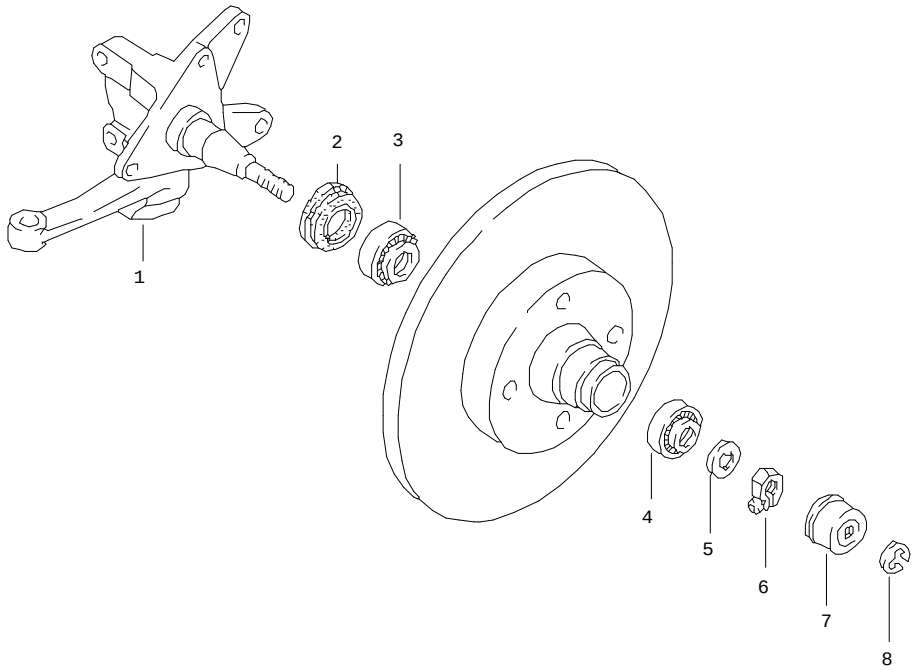


| Pos | Part Number | Name | Remarks | Qty | Model |
|---|---|---|---|---|---|
| | | steering knuckle | | | 924 |
| 1 | 477 407 311 K | steering knuckle | /L | 1 | |
| (1) | E 477 407 312 K | steering knuckle | /R | 1 | |
| 2 | 311 405 641 B | sealing ring | | 2 | |
| 3 | 311 405 625 D | taper roller bearing | | 2 | |
| 4 | 311 405 645 | taper roller bearing | | 2 | |
| 5 | E 311 405 661 | thrust washer | | 2 | |
| 6 | 131 405 670 | clamping nut | | 2 | |
| 7 | 477 405 691 | cap | /L | 1 | |
| (7) | 477 405 692 | cap | /R | 1 | |
| 8 | 900 116 003 02 | circlip | | 1 | |
| | | - -- E N D -- - | | | |

| Model | Year | MG | SG | Illustration | Restrictions | Update | | | | |
|---|---|---|---|---|---|---|---|---|---|---|
| 924 | 85 | 4 | 01 | 401-10 | | 179 | 10:03 | 16.08.2004 | PORSCHE | PET | PORSCHE |

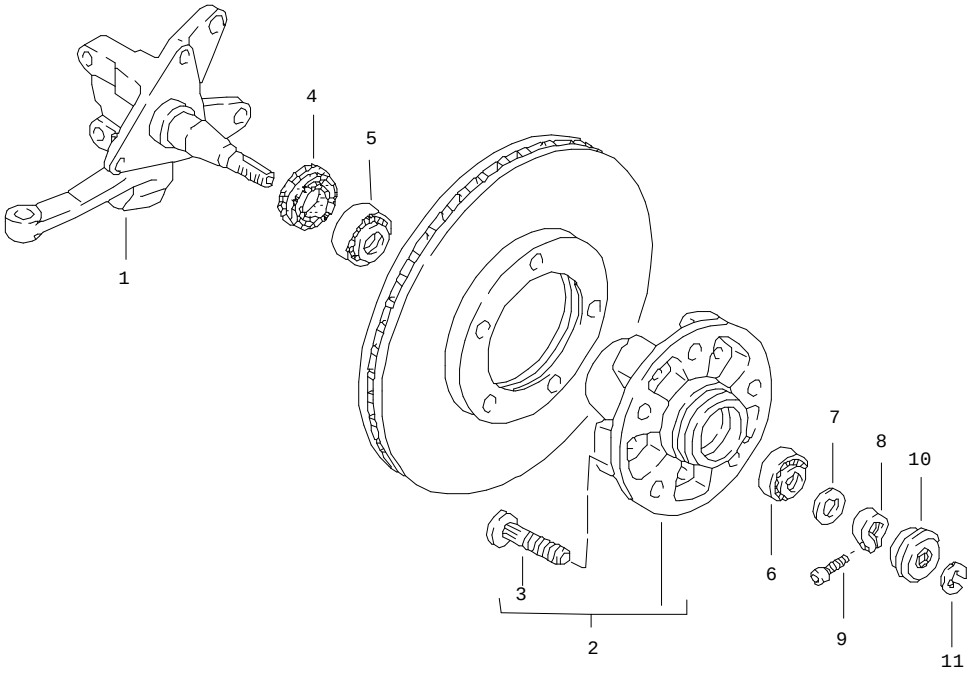


| Pos | Part Number | Name | Remarks | Qty | Model |
|---|---|---|---|---|---|
| | | steering knuckle | | | 924 M 471 TURBO,GT |
| 1 | 477 407 311 L | steering knuckle | /L | 1 | |
| (1) | 477 407 312 L | steering knuckle | /R | 1 | |
| 2 | 477 405 065 B | front wheel hub | | 2 | |
| 3 | 904 341 671 00 | wheel bolt | | 10 | |
| 4 | 477 405 641 | radial sealing ring | | 2 | |
| 5 | 999 059 098 00 | taper roller bearing | | 2 | |
| 6 | 999 059 065 00 | taper roller bearing | | 2 | |
| 7 | 911 341 663 00 | thrust washer | | 2 | |
| 8 | 911 341 673 00 | clamping nut | | 2 | |
| 9 | 999 119 001 01 | pan-head screw | | 2 | |
| 10 | 477 405 691 C | cap | /L | 1 | |
| (10) | 477 405 692 C | cap | /R | 1 | |
| | | - -- E N D -- - | | | |

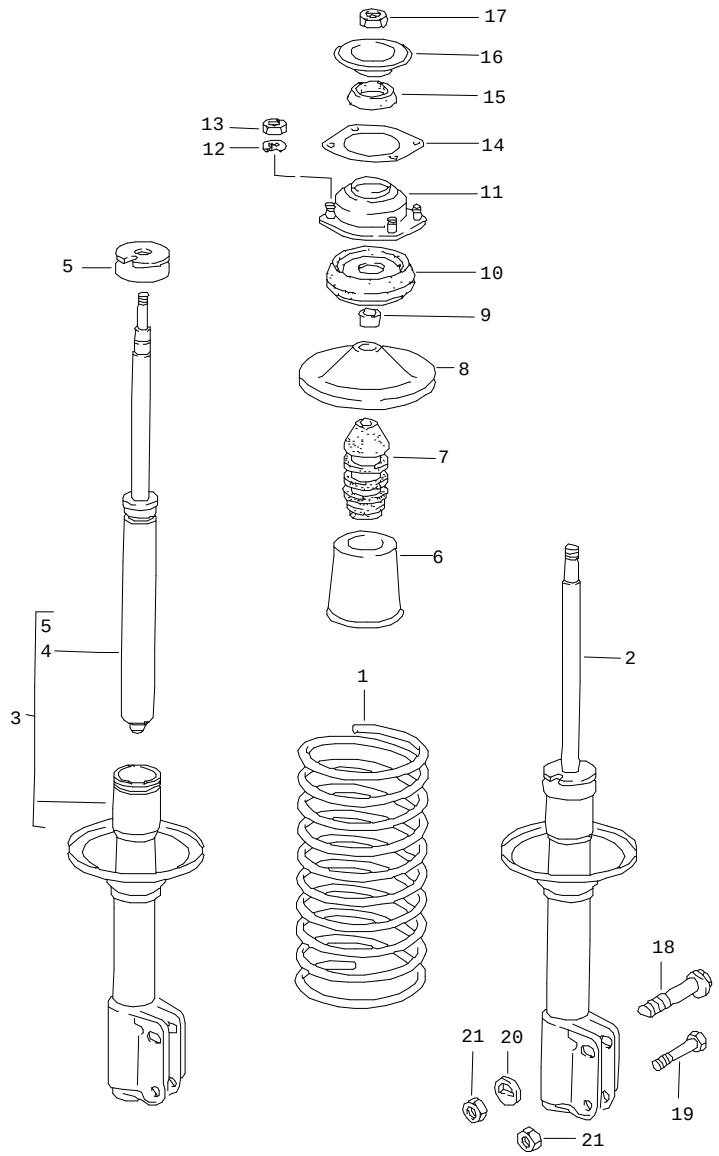


| Pos | Part Number | Name | Remarks | Qty | Model |
|---|---|---|---|---|---|
| | | springs<br>vibration damper | | | |
| 1 | 477 411 105 G | coil spring<br>1 set<br>marked | -80 | 1 | 924 |
| | 954 | red | | | |
| (1) | 477 411 105 G | coil spring<br>1 set<br>marked | | 1 | GT |
| | 954 | red | | | |
| (1) | 477 411 105 M | coil spring<br>1 set<br>marked | -80 | 1 | 924 M 404<br>M 471 |
| | 954 | green | | | |
| (1) | 477 411 105 M | coil spring<br>1 set<br>marked | 81- | 1 | 924 |
| | 954 | green | | | |
| (1) | 477 411 105 Q | coil spring<br>1 set<br>marked | | 1 | TURBO |
| | 954 | blue | | | |
| 2 | 944 343 031 14 | vibration damper | /L | 1 | 924 |
| (2) | 944 343 032 14 | vibration damper | /R | 1 | 924 |
| 2 | 944 343 031 12 | vibration damper | /L | 1 | TURBO,GT |
| (2) | 944 343 032 12 | vibration damper | /R | 1 | TURBO,GT |
| 3 | 944 343 031 13 | vibration damper<br>- koni - | /L | 1 | 924 |
| (3) | 944 343 032 13 | vibration damper<br>- koni - | /R | 1 | 924 |
| 3 | 944 343 031 11 | vibration damper<br>- koni - | /L | 1 | TURBO,GT |
| (3) | 944 343 032 11 | vibration damper<br>- koni - | /R | 1 | TURBO,GT |

| Pos | Part Number | Name | Remarks | Qty | Model |
|---|---|---|---|---|---|
| 2 | 937 343 051 02 | vibration damper<br>- bilstein - | /L | 1 | GT |
| 2 | 937 343 052 02 | vibration damper<br>- bilstein - | /R | 1 | GT |
| 4 | 477 412 059 A | insert<br>- koni - | | 2 | 924 |
| (4) | 944 343 059 00 | insert<br>- koni - | | 2 | TURBO,GT |
| 5 | 171 412 045 | union nut | | 2 | |
| 6 | 171 412 135 | boot | | 2 | |
| 7 | 171 412 303 C | rubber stop | | 2 | |
| 8 | 133 412 341 | concave washer | | 2 | |
| 9 | E 823 412 365 | spacer sleeve | | 2 | |
| 10 | 944 343 071 00 | suspension strut mounting | | 2 | |
| 11 | 477 412 345 | bearing flange | | 2 | |
| 12 | N 012 228 3 | spring washer<br>B 12 | | 8 | |
| 13 | N 011 008 8 | hexagon nut<br>M 8 | | 8 | |
| (14) | 133 412 367 | sealing ring | | 2 | |
| 15 | 477 412 411 | stop ring | | 2 | |
| 16 | 477 412 147 | stop | | 2 | |
| 17 | N 022 150 1 | lock nut<br>VM 14 X 1,5 | | 2 | |
| 18 | 171 407 265 | eccentric screw | | 2 | |
| 19 | 900 082 058 02 | hexagon-head bolt<br>M 12 X 1,5 X 50 | | 2 | |
| 20 | 944 343 175 00 | eccentric washer | | 2 | |
| 21 | N 022 141 4 | lock nut<br>VM 12 X 1,5 | | 4 | |
| | | - -- E N D -- - | | | |

| Model | Year | MG | SG | Illustration | Restrictions | Update | 10:03 | 16.08.2004 | PORSCHE PET PORSCHE |
|---|---|---|---|---|---|---|---|---|---|
| 924 | 85 | 4 | 02 | 402-05 | | 179 | | | |

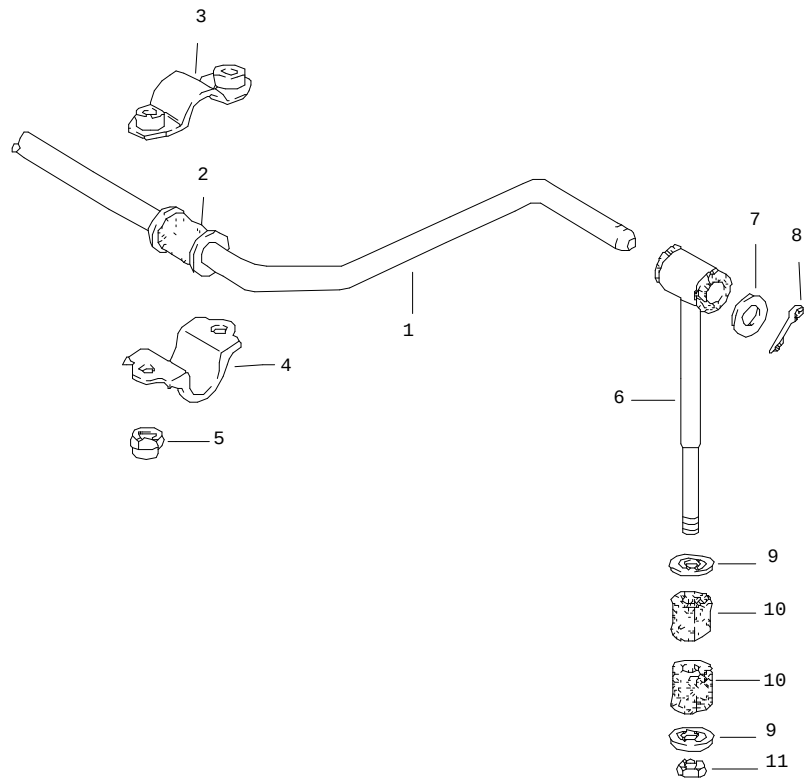


| Pos | Part Number | Name | Remarks | Qty | Model |
|---|---|---|---|---|---|
| | | stabiliser | | | |
| | | F >>92CN4 02197<br>F >>93CN1 00305 | | | 924<br>TURBO, GT |
| 1 | 477 411 309 R | stabiliser<br>21 $ | | 1 | |
| (1) | 477 411 309 L | stabiliser<br>23 $ | | 1 | |
| 2 | 477 411 313 K | stabiliser mounting<br>21 $ | | 2 | |
| (2) | 477 411 313 H | stabiliser mounting<br>23 $ | | 2 | |
| 3 | 477 411 023 | intermediate piece | | 2 | |
| 4 | 477 411 319 | clip | | 2 | |
| 5 | 900 910 022 09 | lock nut<br>VM 8 | | 4 | |
| 6 | 477 411 057 N | push rod<br>21 $ | | 2 | |
| (6) | 477 411 057 K | push rod<br>23 $ | | 2 | |
| 7 | 477 411 317 E | washer<br>21 $ | | 2 | |
| (7) | 477 411 317 B | washer<br>23 $ | | 2 | |
| 8 | N 012 536 1 | cotter pin<br>4 X 30 | | 2 | |
| 9 | 477 411 043 | concave washer<br>stabiliser mounting | | 4 | |
| 10 | 477 411 041 B | rubber mounting | | 4 | |
| 11 | N 011 185 6 | hexagon nut<br>M 10 | | 2 | |
| | | - -- E N D -- - | | | |

| Model | Year | MG | SG | Illustration | Restrictions | Update | | | | |
|---|---|---|---|---|---|---|---|---|---|---|
| 924 | 85 | 4 | 02 | 402-10 | | 179 | 10:03 | 16.08.2004 | PORSCHE | PET | PORSCHE |

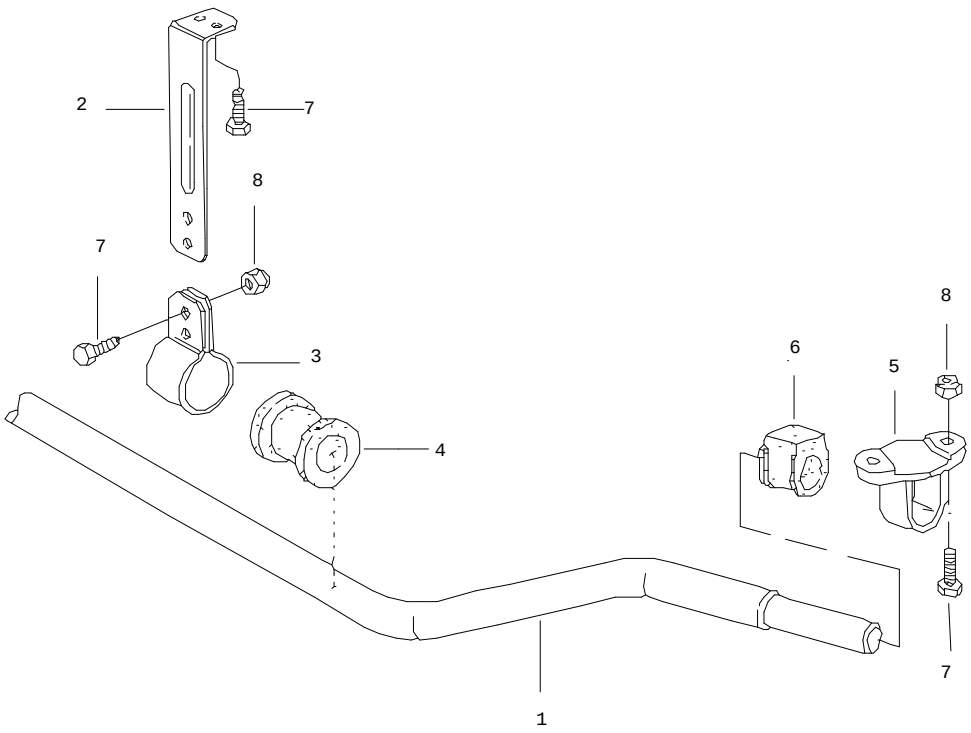


| Pos | Part Number | Name | Remarks | Qty | Model |
|---|---|---|---|---|---|
| | | stabiliser | | | |
| | | F 92CN4 02198>><br>F 93CN1 00306>> | | | 924<br>TURBO |
| 1 | 944 343 707 00 | stabiliser<br>20 $ | | 1 | |
| 1 | 944 343 706 00 | stabiliser<br>21,5 $ | | 1 | |
| 2 | 944 343 733 00 | suspension | | 2 | |
| 3 | 944 343 731 00 | clip | | 2 | |
| 4 | 477 411 053 G | rubber bush<br>20 $ | | 2 | |
| (4) | 477 411 053 N | rubber bush<br>21,5 $ | -83 | 2 | |
| (4) | 477 411 053 J | rubber bush<br>21,5 $ | 84- | 2 | |
| 5 | 944 343 735 00 | bearing bracket | /L | 1 | |
| (5) | 944 343 736 00 | bearing bracket | /R | 1 | |
| 6 | 171 411 314 A | rubber bush | | 2 | |
| 7 | 900 075 079 02 | hexagon-head bolt<br>M 8 X 22 | | 12 | |
| 8 | 900 910 022 09 | lock nut<br>VM 8 | | 8 | |
| | | - -- E N D -- - | | | |

| Model | Year | MG | SG | Illustration | Restrictions | Update | | | | |
|---|---|---|---|---|---|---|---|---|---|---|
| 924 | 85 | 4 | 03 | 403-00 | | 179 | 10:04 | 16.08.2004 | PORSCHE | PET | PORSCHE |

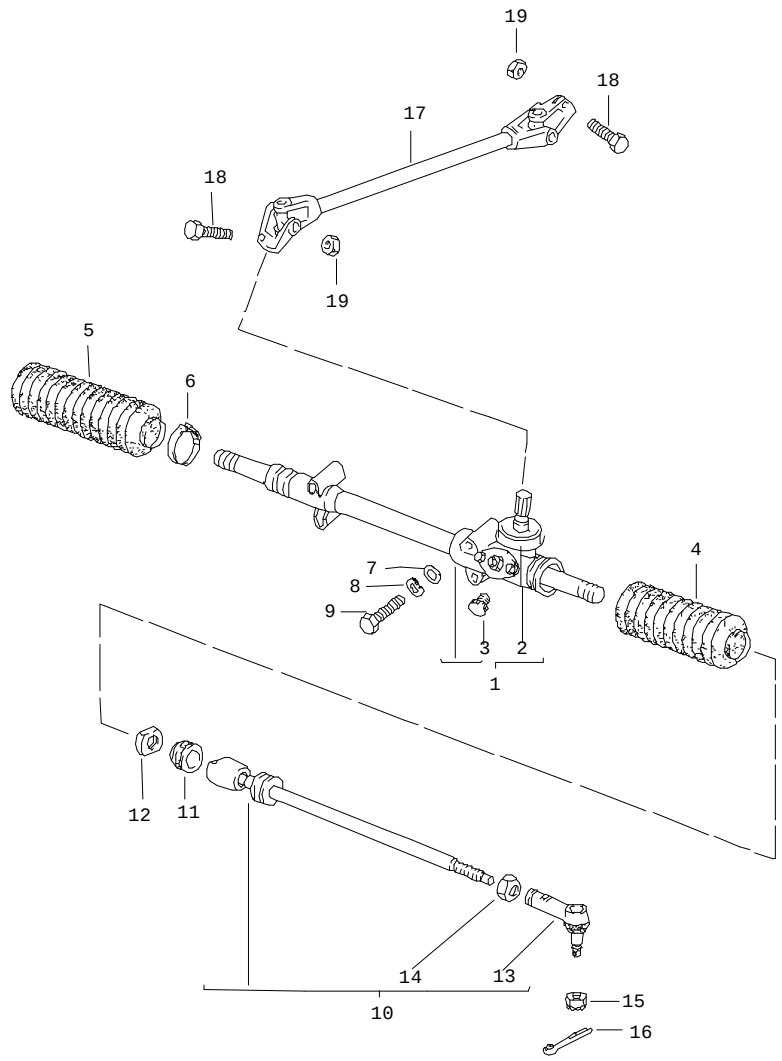


| Pos | Part Number | Name | Remarks | Qty | Model |
|---|---|---|---|---|---|
| | | steering gear<br>tie rod | | | |
| 1 | 477 419 061 C | steering gear | /LL | 1 | |
| (1) | 478 419 061 A | steering gear | /RL | 1 | 924 |
| (1) | 478 419 061 B | steering gear | /RL | 1 | TURBO,GT |
| 2 | 477 419 321 | cap | | 1 | |
| 3 | 477 419 115 | plug | | 1 | |
| 4 | 171 419 831 C | boot | /L | 1 | |
| 5 | 171 419 832 C | bellows | /R | 1 | |
| 6 | 823 419 843 | terminal<br>45 | | 1 | |
| 7 | 900 025 007 02 | washer<br>A 8,4 | | 2 | |
| 8 | N 012 228 3 | spring washer<br>B 8 | | 4 | |
| 9 | N 010 360 6 | hexagon-head bolt<br>M 8 X 60 | | 4 | |
| 10 | 477 419 803 B | tie rod<br>F >>92DN4 02093<br>F >>93DN1 00185 | | 2 | 924,TURBO<br>924<br>TURBO |
| (10) | 944 347 033 01 | tie rod<br>see technical information<br>NR. 22<br>F 92DN4 02094>><br>F 93DN1 00186>> | | 2 | <br><br><br>924<br>TURBO |
| (10) | 944 347 033 00 | tie rod | | 2 | GT |
| 11 | 477 419 827 | stop ring | | 2 | |
| 12 | 171 419 855 | nut<br>M 22 X 1,5 | | 2 | |
| 13 | 477 419 815 | ball joint<br>F >>92DN4 02093<br>F >>93DN1 00185 | | 2 | 924,TURBO<br>924<br>TURBO |
| (13) | 944 347 333 01 | ball joint<br>F 92DN4 02094>><br>F 93DN1 00186>> | | 2 | <br>924<br>TURBO |

| Pos | Part Number | Name | Remarks | Qty | Model |
|---|---|---|---|---|---|
| (13) | 944 347 333 00 | ball joint | | 2 | GT |
| 14 | N 011 163 3 | hexagon nut<br>M 14 X 1,5 | | 2 | |
| 15 | N 011 212 2 | castle nut<br>M 12 X 1,5 | | 2 | |
| 16 | N 012 532 1 | cotter pin<br>3 X 25 | | 2 | |
| 17 | 477 419 951 F | drive shaft | /LL | 1 | |
| (17) | 478 419 951 C | drive shaft | /RL | 1 | 924 |
| (17) | 478 419 951 D | drive shaft | /RL | 1 | TURBO,GT |
| 18 | N 010 335 7 | hexagon-head bolt<br>M 8 X 35 | | 2 | |
| 19 | 900 910 022 09 | lock nut<br>M 8 | | 2 | |
| | | - -- E N D -- - | | | |

| Pos | Part Number | Name | Remarks | Qty | Model |
|---|---|---|---|---|---|

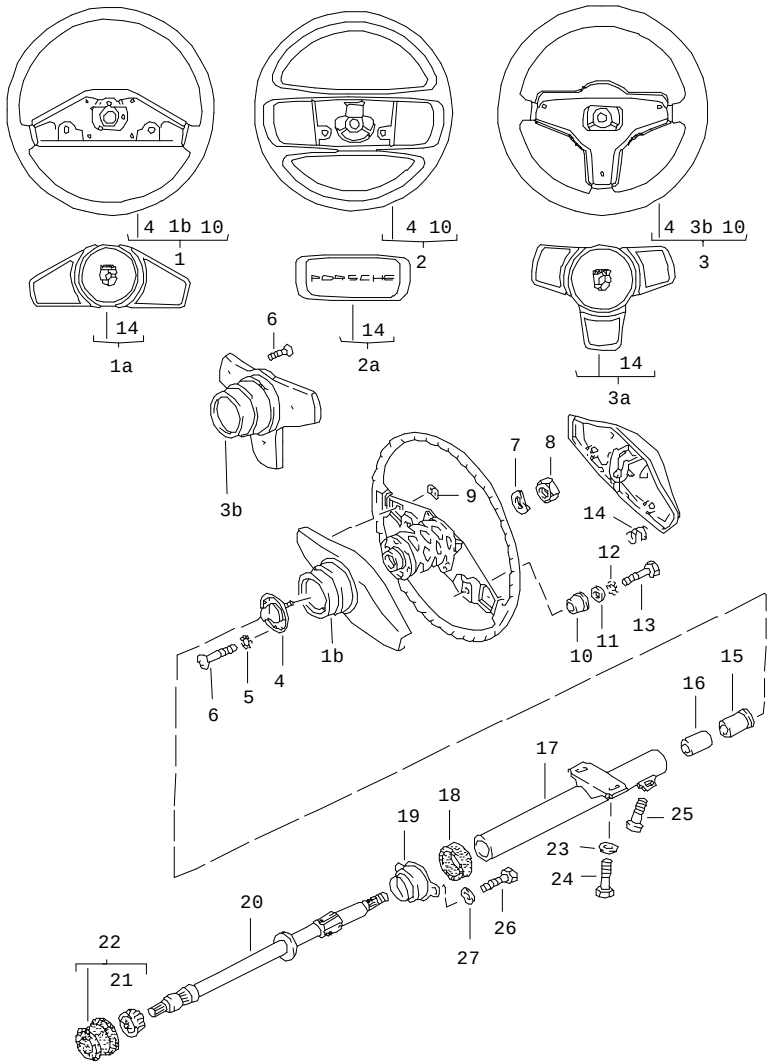


| Pos | Part Number | Name | Remarks | Qty | Model |
|---|---|---|---|---|---|
| | | steering wheel<br>steering column | | | |
| (1) | U 477 419 091 M | steering wheel | -81 | 1 | 924 |
| 1A | 477 419 669 | cap | -81 | 1 | 924 |
| 1B | E 171 419 791 A | lining | -81 | 1 | 924 |
| 2 | 477 419 091 G | sports steering wheel<br>361 MM$ | | 1 | |
| (2) | 477 419 091 H | sports steering wheel<br>leather<br>363 MM $ | | 1 | |
| | 1AJ | black | | | |
| | 3NG | brown | | | |
| 2A | 477 419 681 | cap | | 1 | |
| | 1AJ | black | | | |
| | 3NG | brown | | | |
| 3 | 944 347 084 01 | sports steering wheel<br>380 MM $ | | 1 | |
| | 1DB | black | | | |
| | 4RB | brown | | | |
| 3 | 477 419 091 K | sports steering wheel<br>leather<br>380 MM $ | | 1 | |
| | 1AJ | black | | | |
| | 3NG | brown | | | |
| (3) | 477 419 091 L | sports steering wheel<br>leather<br>with elevated hub<br>380 MM $ | | 1 | |
| | 1AJ | black | | | |
| | 3NG | brown | | | |
| 3A | 944 347 859 01 | cap | | 1 | |
| | 1DB | black | | | |

| Pos | Part Number | Name | Remarks | Qty | Model |
|---|---|---|---|---|---|
| | 4RB | brown | | | |
| 3B | 944 347 057 00 | lining | | 1 | |
| | 1DB | black | | | |
| | 4RB | brown | | | |
| 4 | 113 415 660 A | slip ring | | 1 | |
| 5 | N 012 131 2 | shake-proof washer<br>J 3,7 | | 3 | |
| 6 | 900 146 029 02 | oval-head screw<br>AM 3,5 X 10 | | 6 | |
| 7 | N 012 238 5 | spring washer<br>B 16 | | 1 | |
| 8 | 900 078 006 01 | hexagon nut<br>M 16 X 1,5 | | 1 | |
| 9 | 113 857 113 | clamping washer<br>4 X 12 | -81 | 2 | 924 |
| 10 | 321 419 779 | insulating bush | | 3 | |
| (10) | 321 419 779 A | insulating bush<br>for<br>four-spoke steering wheel | | 3 | |
| 11 | 900 025 002 02 | washer<br>A 4,3 | | 3 | |
| 12 | N 042 122 2 | shake-proof washer<br>A 4,3 | | 3 | |
| 13 | N 010 261 3 | hexagon-head bolt<br>M 4 X 15 | | 3 | |
| 14 | 171 419 697 | spring | | 3 | |
| 15 | 171 419 341 | support ring | | 1 | |
| 16 | 171 419 549 | clamping sleeve | | 1 | |
| 17 | 477 419 563 B | steering column tube | | 1 | |
| 18 | 411 417 613 | rubber mounting | | 1 | |
| 19 | 411 417 605 | support ring | | 1 | |
| 20 | 477 419 505 J | steering column | /LL | 1 | |
| 20 | 477 419 505 J | steering column | /RL | 1 | |
| 20 | E 478 419 505 B | steering column | /RL | 1 | TURBO,GT |
| 21 | 113 415 511 | needle-roller bearing | | 1 | |
| 22 | 477 419 059 | sealing ring | | 1 | |
| 23 | 111 129 720 | washer<br>A 8,4 | | 2 | |
| 24 | 411 417 549 | shear bolt | | 2 | |
| 25 | N 014 707 4 | pan-head screw<br>M 8 X 15 | | 1 | |
| 26 | 999 072 005 09 | hexagon-head bolt<br>M 6 X 12 | | 2 | |
| 27 | 211 805 243 | spring washer | | 2 | |
| | | - -- E N D -- - | | | |

| Model | Year | MG | SG | Illustration | Restrictions | Update | | | | |
|---|---|---|---|---|---|---|---|---|---|---|
| 924 | 85 | 5 | 01 | 501-00 | | 179 | 10:04 | 16.08.2004 | PORSCHE | PET | PORSCHE |

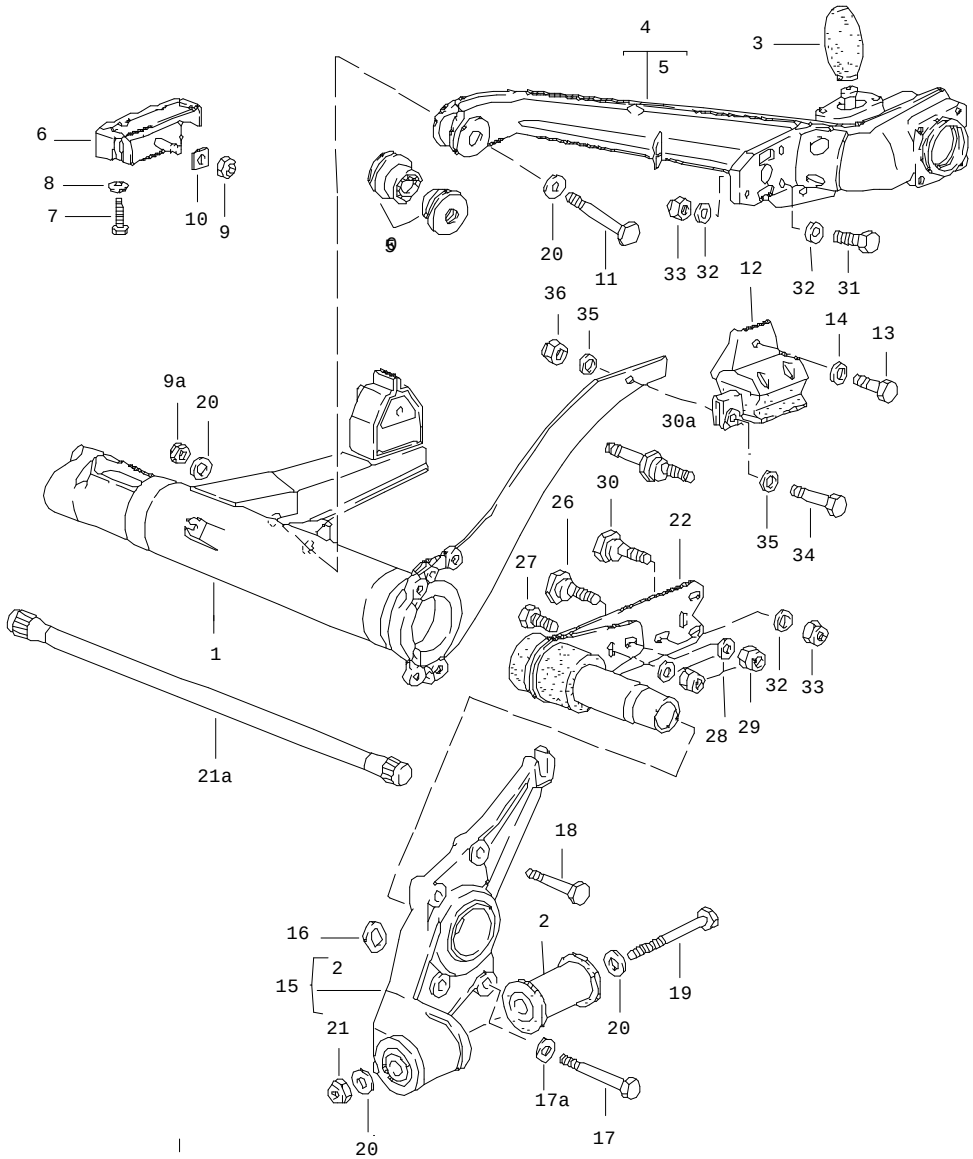


| Pos | Part Number | Name | Remarks | Qty | Model |
|---|---|---|---|---|---|
| | | rear axle carrier<br>rear-axle trailing arm | | | |
| 1 | 477 500 053 F | rear axle carrier<br>without<br>stabiliser | | 1 | 924 |
| (1) | 477 500 053 F | rear axle carrier<br>with<br>stabiliser | | 1 | 924 |
| (1) | E 477 500 053 E | rear axle carrier | | 1 | TURBO,GT |
| 2 | 477 501 069 A | rubber bush | | 2 | |
| 3 | 311 501 191 | rubber stop | | 2 | |
| 4 | 477 501 035 D | rear-axle trailing arm | /L | 1 | 924,TURBO |
| (4) | 477 501 036 D | rear-axle trailing arm | /R | 1 | 924,TURBO |
| (4) | E 937 331 021 01 | rear-axle trailing arm | /L | 1 | GT |
| (4) | 937 331 022 01 | rear-axle trailing arm | /R | 1 | GT |
| 5 | 477 501 541 | silentbloc | | 4 | |
| 6 | 477 501 089 | mounting | | 2 | |
| 7 | N 040 272 2 | hexagon-head bolt<br>M 10 X 35 | | 4 | |
| 8 | 900 025 008 09 | washer<br>A 10,5 | | 4 | |
| 9 | N 022 149 2 | lock nut<br>VM 10 | | 2 | |
| 9A | N 021 131 1 | lock nut<br>M 12 X 1,5 | | 2 | |
| 10 | 477 501 697 | washer | | 2 | |
| 11 | N 010 190 4 | hexagon-head bolt<br>M 12 X 90 | | 2 | |
| 12 | 944 331 075 00 | supporting mount | /L | 1 | |
| (12) | 944 331 076 00 | supporting mount | /R | 1 | |
| 13 | 900 075 040 02 | hexagon-head bolt<br>M 10 X 20 | | 2 | |

| Pos | Part Number | Name | Remarks | Qty | Model |
|---|---|---|---|---|---|
| 14 | N 012 230 6 | spring washer<br>B 10 | | 8 | |
| 15 | 944 331 059 00 | bearing flange | /L | 1 | |
| (15) | 944 331 060 00 | bearing flange | /R | 1 | |
| 16 | 477 501 667 | washer | | 2 | |
| 17 | N 010 465 5 | hexagon-head bolt<br>M 10 X 65 | | 2 | |
| 17A | N 012 230 6 | spring washer<br>B 10 | | 8 | |
| 18 | 900 074 063 02 | hexagon-head bolt<br>M 10 X 55 | | 6 | |
| 19 | 900 082 059 02 | hexagon-head bolt<br>M 12 X 1,5 X 115 | | 2 | |
| 20 | 803 199 347 | washer | | 8 | |
| 21 | N 022 141 4 | lock nut<br>VM 12 X 1,5 | | 2 | |
| 21A | 311 511 115 D | torsion bar<br>22 $ | /L -80 | 1 | 924 |
| (21A) | 311 511 116 D | torsion bar<br>22 $ | /R -80 | 1 | 924 |
| (21A) | 944 333 115 00 | torsion bar<br>23,5 $ | /L | 1 | |
| (21A) | 944 333 116 00 | torsion bar<br>23,5 $ | /R | 1 | |
| 22 | 477 511 201 | strut | /L | 1 | |
| 22 | 477 511 202 | strut | /R | 1 | |
| 26 | 911 333 303 00 | eccentric screw | | 2 | |
| 27 | 911 333 305 00 | hexagon-head bolt | | 2 | |
| 28 | 911 333 307 00 | washer | | 4 | |
| 29 | 900 910 092 02 | lock nut<br>VM 16 X 1,5 | | 4 | |
| 30 | 477 511 519 | camber eccentric | | 2 | 924 |
| 30A | 477 511 515 | camber eccentric<br>only together with<br>stabiliser<br>14 MM $ | | 2 | |
| 31 | N 010 138 1 | hexagon-head bolt<br>M 12 X 1,5 X 38 | | 4 | |
| 32 | N 011 531 7 | washer<br>A 13 | | 8 | |
| 33 | N 022 141 4 | lock nut<br>VM 12 X 1,5 | | 4 | |
| 34 | N 010 242 12 | hexagon-head bolt<br>M 8 X 25 | | 2 | |
| 35 | 900 025 007 02 | washer<br>A 8,4 | | 4 | |
| 36 | N 022 146 1 | lock nut<br>VM 8 | | 2 | |

- -- E N D -- -

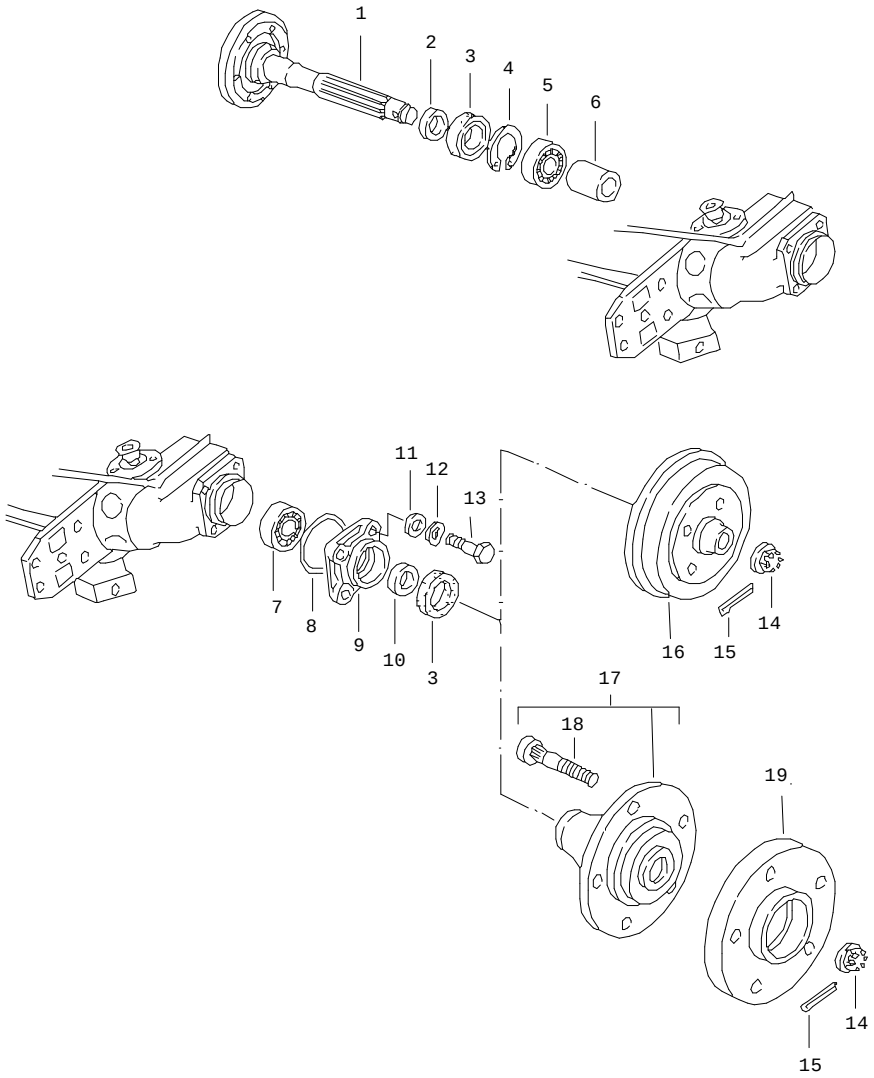


| Pos | Part Number | Name | Remarks | Qty | Model |
|---|---|---|---|---|---|
| | | rear wheel shaft | | | |
| 1 | 477 501 263 | rear wheel shaft | | 2 | |
| 2 | 113 501 305 | spacer ring<br>inner | | 2 | |
| 3 | 113 501 315 H | sealing ring | | 4 | |
| 4 | 937 331 133 00 | circlip<br>62 X 2,00 MM | | 2 | |
| (4) | 937 331 133 01 | circlip<br>62 X 2,05 MM | | X | |
| (4) | 937 331 133 02 | circlip<br>62 X 2,10 MM | | X | |
| (4) | 937 331 133 03 | circlip<br>62 X 2,15 MM | | X | |
| (4) | 937 331 133 04 | circlip<br>62 X 2,20 MM | | X | |
| 5 | 113 501 283 | deep-groove ball bearing | | 2 | |
| (5) | 937 331 583 00 | deep-groove ball bearing | | 2 | GT |
| 6 | E 113 501 243 | spacer tube | | 2 | |
| 7 | 113 501 277 A | cylindrical-roller bearing | | 2 | |
| 8 | 113 501 291 B | sealing ring | | 2 | |
| 9 | 113 501 311 | cover | | 2 | |
| 10 | 113 501 303 | spacer ring<br>outer | | 2 | |
| 11 | 311 501 317 | washer<br>10,2 X 18 | | 8 | |
| 12 | N 012 231 1 | spring washer<br>A 10 | | 8 | |
| 13 | 311 501 325 | hexagon-head bolt | | 8 | |
| (13) | N 010 450 5 | hexagon-head bolt<br>only together with<br>disc brake | 82- | 8 | |
| 14 | 311 501 221 | castle nut | | 2 | |

| Pos | Part Number | Name | Remarks | Qty | Model | Pos | Part Number | Name | Remarks | Qty | Model |
|---|---|---|---|---|---|---|---|---|---|---|---|
| 15 | 900 021 025 02 | cotter pin<br>5 X 45 | | 2 | | | | | | | |
| 16 | 477 501 615 A | brake drum | | 2 | | | | | | | |
| | | only together with<br>disc brake | | | | | | | | | |
| 17 | 477 501 065 | wheel hub | | 2 | | | | | | | |
| 18 | 911 331 671 00 | wheel bolt | | 10 | | | | | | | |
| 19 | 477 501 701 | spacer tube | | 2 | | | | | | | |
| | | - -- E N D -- - | | | | | | | | | |

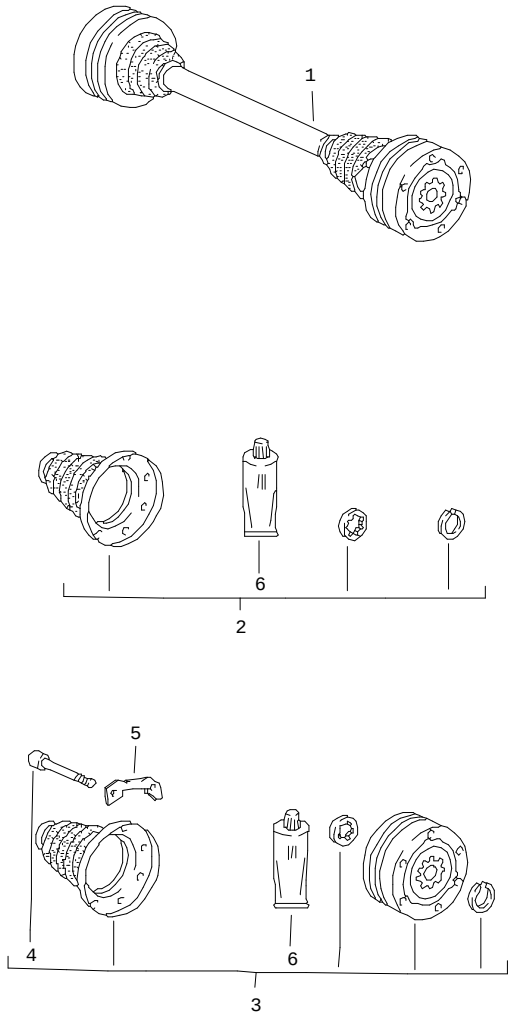


| Pos | Part Number | Name | Remarks | Qty | Model |
|---|---|---|---|---|---|
| | | drive shaft | | | |
| 1 | 477 501 103 | drive shaft | | 2 | 924,TURBO |
| 1 | 937 332 021 01 | drive shaft | | 2 | GT |
| 1 | 477 501 101 A | drive shaft | /L | 1 | AUT. |
| 1 | E 477 501 102 A | drive shaft | /R | 1 | AUT. |
| 2 | 944 331 903 00 | repair kit<br>dust bellows | | 4 | |
| 3 | 944 331 901 00 | repair kit<br>constant-velocity joint | | 4 | |
| 4 | 893 407 237 | pan-head screw | | 24 | |
| 5 | 944 332 191 00 | plate | | 12 | |
| 6 | 000 043 005 00 | grease for drive shaft<br>1 90-g tube<br>optimoly | | X | |
| | | - -- E N D -- - | | | |

| Model | Year | MG | SG | Illustration | Restrictions | Update | | | | |
|---|---|---|---|---|---|---|---|---|---|---|
| 924 | 85 | 5 | 02 | 502-00 | | 179 | 10:04 | 16.08.2004 | PORSCHE | PET | PORSCHE |

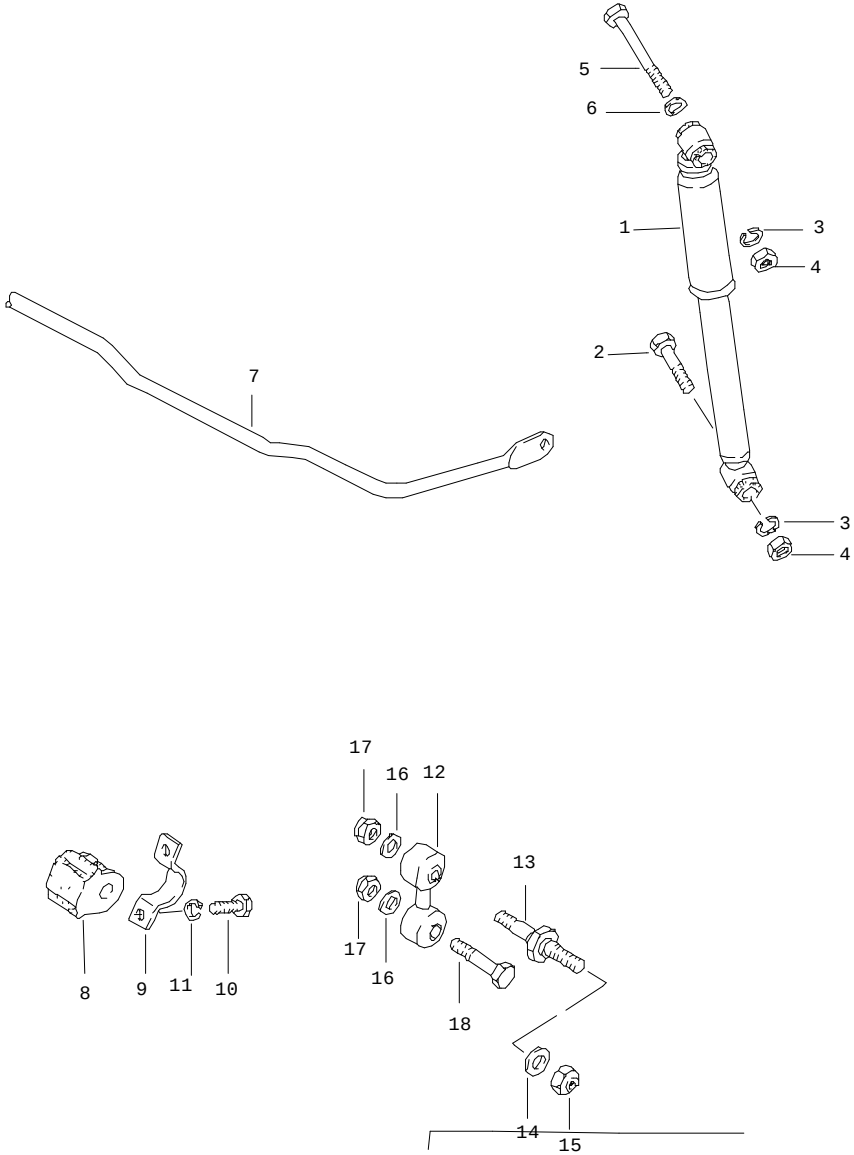


| Pos | Part Number | Name | Remarks | Qty | Model |
|---|---|---|---|---|---|
| | | vibration damper<br>stabiliser | | | |
| 1 | 477 513 031 C | vibration damper<br>- fichtel + sachs - | | 2 | 924 |
| (1) | 477 513 031 H | vibration damper<br>- fichtel + sachs - | | 2 | TURBO,GT |
| (1) | 477 513 031 E | vibration damper<br>- koni - | | 2 | 924 |
| (1) | 944 333 031 00 | vibration damper<br>- koni - | | 2 | TURBO,GT |
| (1) | 477 513 031 A | vibration damper<br>- bilstein - | | 2 | GT |
| 2 | N 010 156 3 | hexagon-head bolt<br>M 12 X 1,5 X 70 | | 2 | |
| 3 | N 012 042 4 | lock ring<br>B 12 | | 4 | |
| 4 | N 011 020 8 | hexagon nut<br>M 12 X 1,5 | | 4 | |
| 5 | 900 082 044 02 | hexagon-head bolt<br>M 12 X 1,5 X 125 | | 2 | |
| 6 | 043 101 129 | washer<br>12,2 X 22 | | 2 | |
| | | stabiliser | | | |
| 7 | 477 511 411 A | stabiliser<br>14 $ | | 1 | |
| (7) | 477 511 411 | stabiliser<br>16 $ | | 1 | GT |
| 8 | 477 411 313 F | rubber mounting<br>14 $ | | 2 | |
| (8) | 477 411 313 A | stabiliser mounting<br>16 $ | | 2 | GT |
| 9 | 113 411 333 | retaining bow | | 2 | |
| 10 | 900 075 085 02 | hexagon-head bolt<br>M 8 X 20 | | 4 | |
| 11 | 900 027 015 02 | lock ring<br>B 8 | | 4 | |

| Pos | Part Number | Name | Remarks | Qty | Model | Pos | Part Number | Name | Remarks | Qty | Model |
|---|---|---|---|---|---|---|---|---|---|---|---|
| 12 | 477 511 051 A | stabiliser mounting | | 2 | | | | | | | |
| 13 | 477 511 515 | camber eccentric | | 2 | | | | | | | |
| 14 | N 011 531 4 | washer<br>A 13 | | 2 | | | | | | | |
| 15 | N 022 141 4 | lock nut<br>M 12 X 1,5 | | 2 | | | | | | | |
| 16 | 900 025 008 09 | washer<br>A 10,5 | | 4 | | | | | | | |
| 17 | N 022 149 2 | lock nut<br>M 10 | | 4 | | | | | | | |
| 18 | N 010 452 4 | hexagon-head bolt<br>M 10 X 52 | | 2 | | | | | | | |
| | | - -- E N D -- - | | | | | | | | | |

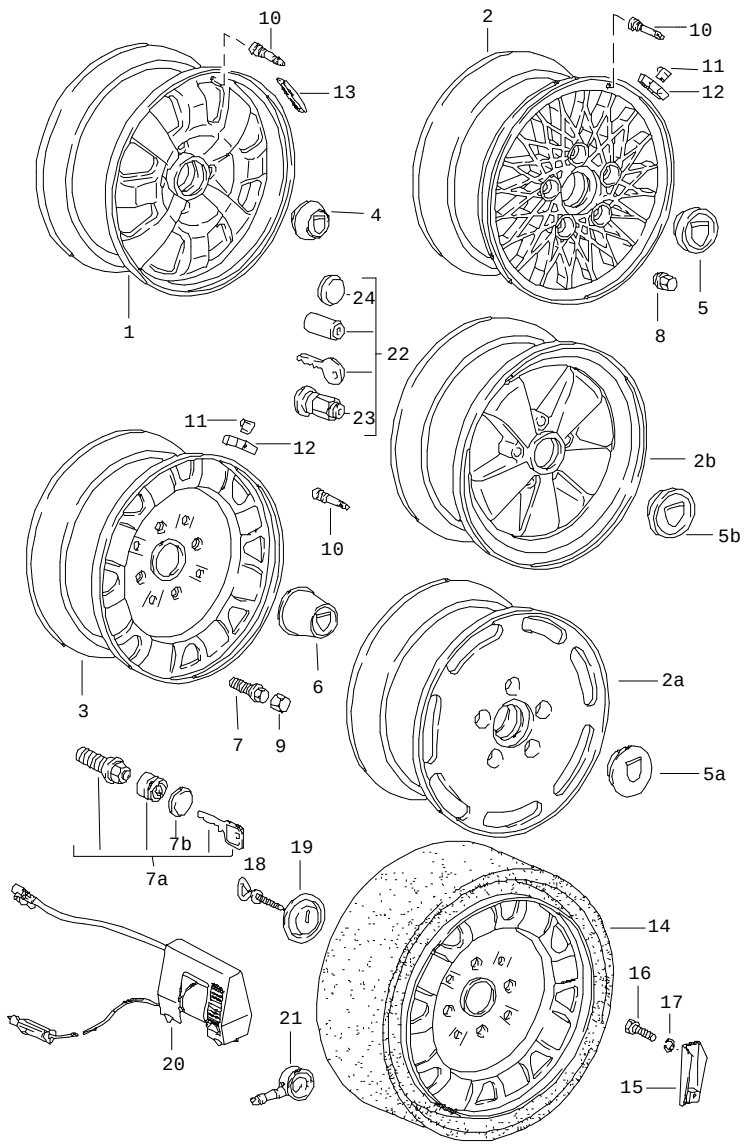


| Pos | Part Number | Name | Remarks | Qty | Model |
|---|---|---|---|---|---|
| | | disc wheel | | | |
| 1 | 477 601 031 B | alloy wheel<br>6 J X 14, 4 LOCH<br>ET 20<br>silver metallic | | 4 | 924 |
| (1) | E 477 601 031 D | alloy wheel<br>6 J X 14, 4 LOCH<br>ET 20<br>black | | 4 | 924 |
| (2) | 477 601 031 H | cast spoked wheel<br>6 J X 15, 4 LOCH<br>ET 20<br>silver metallic | | 4 | |
| (2) | 477 601 031 J | disc wheel<br>6 J X 15, 4 LOCH<br>ET 20<br>black | | 4 | |
| 2 | 477 601 025 B | cast spoked wheel<br>6 J X 15, 5 LOCH<br>ET 53<br>silver metallic | | 4 | |
| 2A | 477 601 026 D | forged wheel<br>6 J X 16, 5 LOCH<br>ET 53<br>silver metallic | | 4 | TURBO |
| 2B | 911 361 020 41 | alloy wheel<br>7 J X 15, 5 LOCH<br>ET 23,3<br>black star<br>rim flange polished | | 4 | GT |
| (2B) | 911 362 115 00 | alloy wheel<br>7 J X 16, 5 LOCH<br>ET 23,3<br>black star<br>rim flange polished | /V | 2 | GT |
| (2B) | 911 362 117 00 | alloy wheel<br>8 J X 16<br>5-<br>hole<br>ET 23,3<br>black star<br>rim flange polished | /H | 2 | GT |

| Pos | Part Number | Name | Remarks | Qty | Model |
|---|---|---|---|---|---|
| 3 | 477 601 029 A | steel wheel<br>5,5 J X 14<br>4-<br>hole | | 4 | |
| (3) | 477 601 030 A | steel wheel<br>5,5 J X 15<br>5-<br>hole<br>for winter use<br>use also:<br>N 020.112.1 | | 4 | TURBO<br>924,M 471 |
| 4 | 477 601 151 N | hub cap<br>alloy wheel | | 4 | 924 |
| 5 | 477 601 051 C | hub cap<br>cast spoked wheel<br>4-<br>hole | | 4 | |
| (5) | 928 361 032 01 | hub cap<br>cast spoked wheel<br>5-<br>hole | | 4 | |
| 5A | 477 601 051 D | hub cap<br>forged wheel | | 4 | TURBO |
| 5B | 911 361 032 28 | hub cap | | 4 | GT |
| 6 | 477 601 151 E | hub cap<br>steel wheel<br>4-<br>hole | | 4 | 924 |
| - | 901 361 031 01 | hub cap<br>steel wheel<br>5-<br>hole | | 4 | |
| 7 | 431 601 139 | screw<br>M 14 X 1,5 X 25,5<br>for<br>477.601.029.A | | 16 | 924 |
| (7) | 477 601 139 B | screw<br>M 14 X 1,5 X 25<br>for<br>477.601.031 B/D | | 16 | 924 |
| (7) | 477 601 139 C | screw<br>M 14 X 1,5 X 70<br>for<br>477.601.031.H | | 16 | |
| 7A | 477 601 041 | lock<br>1 set<br>for<br>4-<br>hole<br>6 J X 14 | | 1 | |
| (7A) | 477 601 041 A | lock<br>1 set<br>for<br>4-<br>hole<br>6 J X 15 | | 1 | |
| 7B | 928 361 310 00 | cap | | 4 | |
| 8 | 999 182 003 36 | wheel nut | | 20 | |
| (8) | N 020 112 1 | ball seat nut<br>A 14<br>for steel rim only<br>5-<br>hole | | 20 | 924,TURBO |
| 9 | 321 601 173 A | cap | | 16 | 924 |
| | 01C | black | | | |
| 10 | 900 265 001 50 | rubber valve<br>15,2 $ | | 4 | 924,TURBO |
| (10) | 900 265 001 50 | rubber valve | | 4 | GT |
| - | 911 361 561 01 | valve support | | 4 | GT |
| 11 | 928 361 420 01 | retainer spring<br>for<br>balance weight | | X | 924,TURBO |
| (12) | 928 361 410 00 | balance weight<br>10 G | | X | 924,TURBO |
| (12) | 928 361 411 00 | balance weight<br>20 G | | X | 924,TURBO |
| (12) | 928 361 412 00 | balance weight<br>30 G | | X | 924,TURBO |

| Pos | Part Number | Name | Remarks | Qty | Model |
|---|---|---|---|---|---|
| (12) | 928 361 413 00 | balance weight<br>40 G | | X | 924,TURBO |
| 12 | 928 361 414 00 | balance weight<br>50 G | | X | 924,TURBO |
| (12) | 928 361 415 00 | balance weight<br>60 G | | X | 924,TURBO |
| (12) | 928 361 416 00 | balance weight<br>70 G | | X | 924,TURBO |
| (12) | 928 361 417 00 | balance weight<br>80 G | | X | 924,TURBO |
| (13) | 901 361 410 00 | balance stick-on weight<br>10 G | | X | 924,GT |
| (13) | 901 361 411 00 | balance stick-on weight<br>20 G | | X | 924,GT |
| (13) | 901 361 412 00 | balance stick-on weight<br>30 G | | X | 924,GT |
| 13 | 901 361 413 00 | balance stick-on weight<br>40 G | | X | 924,GT |
| (13) | 901 361 414 00 | balance stick-on weight<br>50 G | | X | 924,GT |
| (13) | 901 361 415 00 | balance stick-on weight<br>60 G | | X | 924,GT |
| (13) | 901 361 416 00 | balance stick-on weight<br>70 G | | X | 924,GT |
| (13) | 901 361 417 00 | balance stick-on weight<br>80 G | | X | 924,GT |
| | | emergency wheel | | | |
| 14 | 477 601 011 | emergency wheel<br>5 1/2 J X 14<br>with collapsible tire<br>4-<br>hole<br>B 78 - 14 SST | | 1 | |
| (14) | E 477 601 015 A | emergency wheel<br>5 1/2 J X 15<br>with collapsible tire<br>5-<br>hole<br>165/15 | | 1 | |
| (14) | E 477 601 015 A | emergency wheel<br>5 1/2 J X 15<br>with collapsible tire<br>5-<br>hole<br>165/15 | | 1 | |
| (14) | 911 361 028 11 | emergency wheel<br>5 1/2 J X 15<br>with collapsible tire<br>5-<br>hole<br>165/ 15 | | 1 | GT |
| 15 | 477 813 191 | support | | 1 | |
| 16 | E N 010 251 2 | hexagon-head bolt<br>M 10 X 18 | | 1 | |
| 17 | 900 027 016 02 | lock ring | | 1 | |
| 18 | 914 722 104 10 | winged screw<br>M 10 X 55 | | 1 | |
| (18) | 914 722 104 10 | winged screw<br>M 10 X 75 | | 1 | |
| 19 | 477 813 157 | washer | | 1 | |
| 20 | 911 361 510 02 | small electric compressor | | 1 | |
| 21 | 911 722 201 02 | tyre pressure gauge | | 1 | |
| 22 | 928 361 047 03 | wheel nut<br>lockable<br>1 set | | 1 | TURBO,GT |
| 23 | 928 361 306 03 | wheel nut<br>lockable without lock | | 4 | TURBO,GT |
| 24 | 928 361 310 00 | cap | | 4 | TURBO,GT |
| | | - -- E N D -- - | | | |

| Model | Year | MG | SG | Illustration | Restrictions | Update | 10:05 | 16.08.2004 | PORSCHE | PET | PORSCHE |
|---|---|---|---|---|---|---|---|---|---|---|---|
| 924 | 85 | 6 | 02 | 602-00 | | 179 | | | | | |

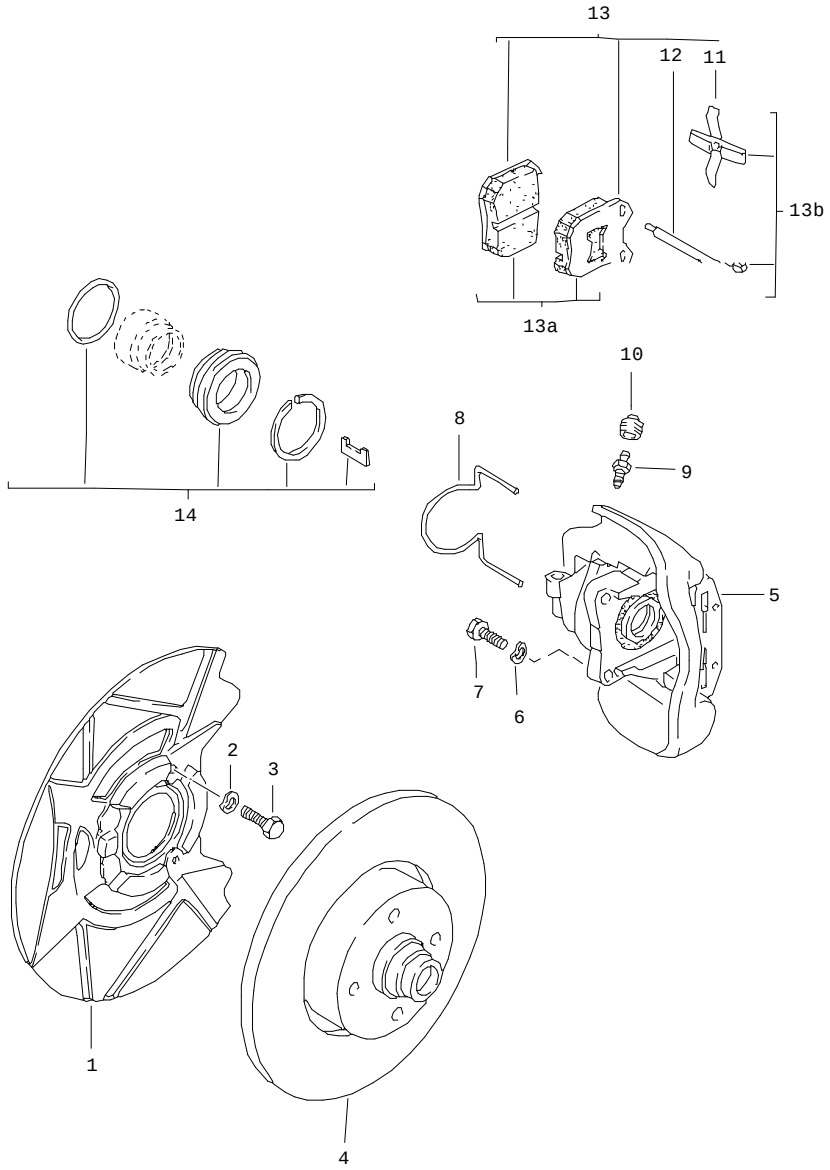


| Pos | Part Number | Name | Remarks | Qty | Model |
|---|---|---|---|---|---|
| | | disc brake<br>front axle | | | 924 |
| 1 | E 477 407 165 E | cover plate | | 2 | |
| 2 | N 012 234 5 | spring washer<br>B 7 | | 6 | |
| 3 | N 010 226 2 | hexagon-head bolt<br>M 7 X 10 | | 6 | |
| 4 | 477 405 583 B | brake disc | | 2 | |
| 5 | E 477 615 107 | floating calliper | | 1 | |
| (5) | 477 615 108 | floating calliper | | 1 | |
| 6 | 900 028 014 02 | spring washer<br>B 12 | | 4 | |
| 7 | N 010 137 1 | hexagon-head bolt<br>M 12 X 1,5 X 35 | | 4 | |
| 8 | 803 615 169 | guide spring | /L | 1 | |
| (8) | E 803 615 170 | guide spring | /R | 1 | |
| 9 | 113 615 273 A | ventilation valve | | 2 | |
| 10 | 211 611 483 | dust boot | | 2 | |
| 11 | * 803 615 269 C | expanding spring | | 2 | |
| 12 | * 803 615 261 B | retaining pin | | 4 | |
| 13 | A 477 698 151 A | set of brake pads | | 1 | |
| 13A | 928 352 951 02 | set of brake pads | | 1 | |
| 13B | 477 698 163 | parts set | | 1 | |
| 14 | E 803 698 471 C | set of seals | | 1 | |
| | | - -- E N D -- - | | | |

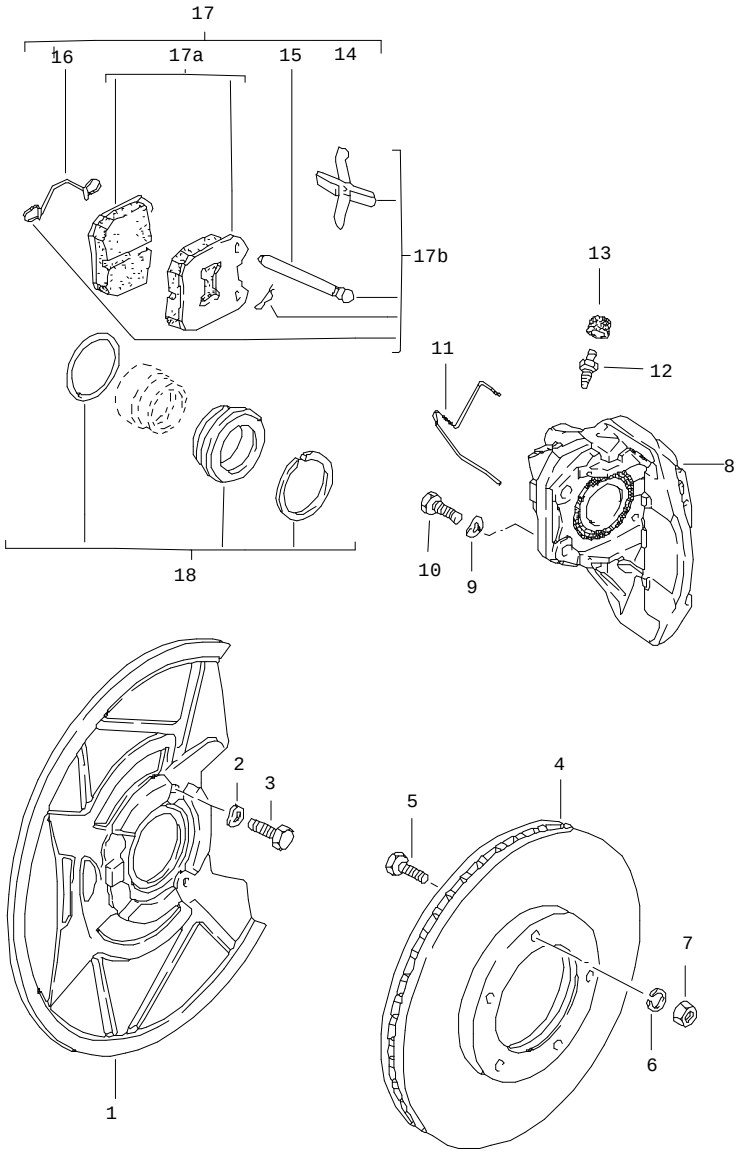


| Pos | Part Number | Name | Remarks | Qty | Model |
|---|---|---|---|---|---|
| | | disc brake<br>front axle | | | 924,M 471<br>TURBO,GT |
| 1 | 477 407 165 F | cover plate | | 2 | 924,TURBO |
| (1) | 937 351 803 00 | cover plate | /L | 1 | GT |
| (1) | 937 351 804 00 | cover plate | /R | 1 | GT |
| 2 | N 012 234 5 | spring washer<br>B 7 | | 6 | |
| 3 | N 010 226 2 | hexagon-head bolt<br>M 7 X 10 | | 6 | |
| 4 | 477 405 083 A | brake disc | | 2 | |
| 5 | 900 075 079 02 | hexagon-head bolt<br>M 8 X 22 | | 10 | |
| 6 | N 012 241 1 | spring washer<br>B 8 | | 10 | |
| 7 | 900 076 025 02 | hexagon nut<br>M 8 | | 10 | |
| 8 | E 477 615 109 | floating calliper | /L | 1 | |
| (8) | E 477 615 110 | floating calliper | /R | 1 | |
| 9 | 900 028 014 02 | spring washer<br>B 12 | | 4 | |
| 10 | N 040 108 1 | hexagon-head bolt<br>M 12 X 1,5 X 40 | | 4 | |
| 11 | 431 615 169 | guide spring | | 2 | |
| 12 | 928 351 945 00 | ventilation valve | | 2 | |
| 13 | 211 611 483 | dust boot | | 2 | |
| 14 | * 928 351 935 00 | expanding spring | | 2 | |
| 15 | * 928 351 936 00 | retaining pin | | 4 | |
| 16 | * 477 615 112 | retaining spring | | 2 | |
| 17 | A 944 351 951 00 | set of brake pads | | 1 | |
| 17A | 944 351 951 02 | set of brake pads | | 1 | |
| 17A | 944 351 951 02 | set of brake pads | | 1 | M 475 |

| Pos | Part Number | Name | Remarks | Qty | Model | Pos | Part Number | Name | Remarks | Qty | Model |
|---|---|---|---|---|---|---|---|---|---|---|---|
| 17B | 944 351 952 01 | mounting parts | | 1 | | | | | | | |
| 18 | * 928 351 941 00 | set of seals | | 1 | | | | | | | |
| | | - -- E N D -- - | | | | | | | | | |

| Model | Year | MG | SG | Illustration | Restrictions | Update | | | | |
|---|---|---|---|---|---|---|---|---|---|---|
| 924 | 85 | 6 | 03 | 603-00 | | 179 | 10:06 | 16.08.2004 | PORSCHE | PET | PORSCHE |

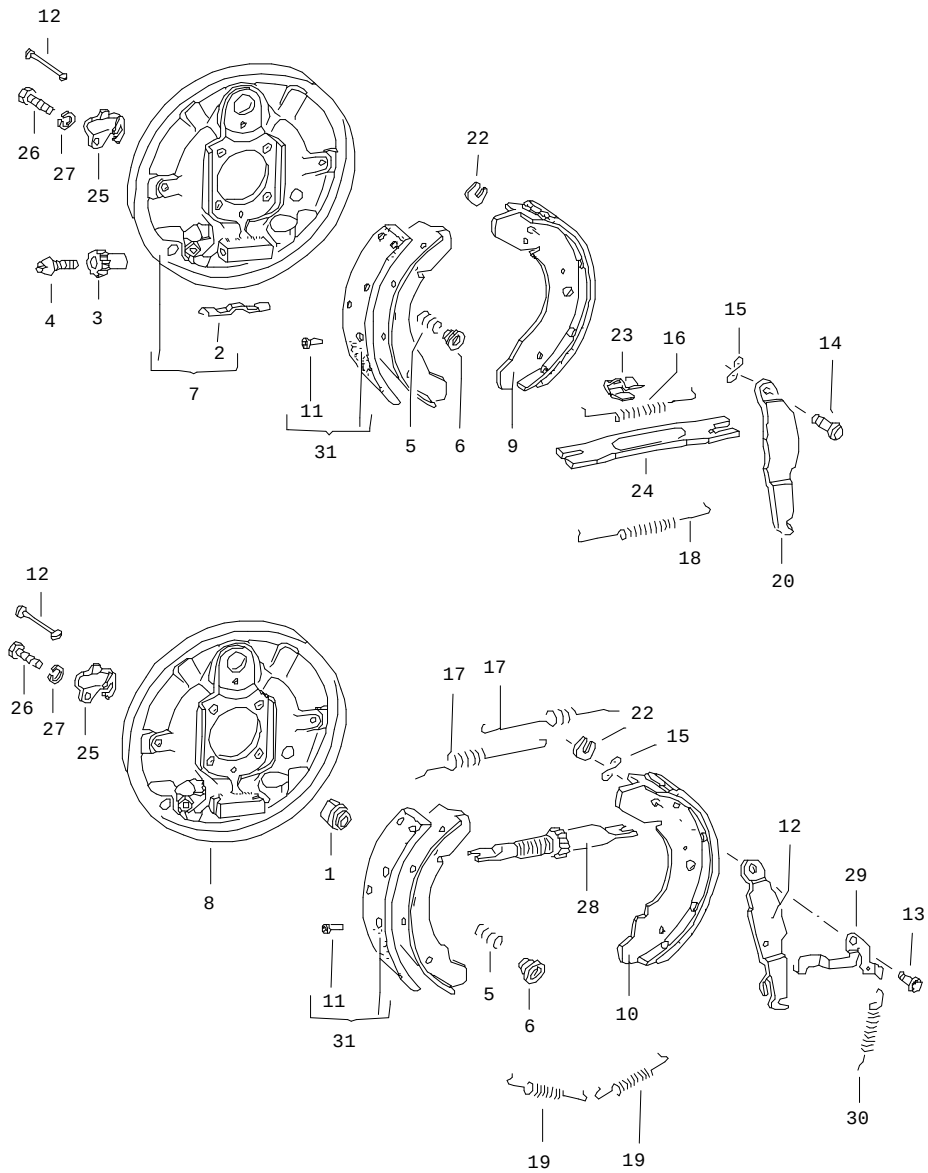


| Pos | Part Number | Name | Remarks | Qty | Model |
|---|---|---|---|---|---|
| | | brake<br>rear axle | | | 924 |
| 1 | 113 609 163 | plug | | 8 | |
| 2 | 211 609 185 A | leaf spring<br>for<br>adjusting nut | | 2 | |
| 3 | 113 609 205 A | adjusting nut | | 4 | |
| 4 | 131 609 209 | adjusting screw | | 4 | |
| 5 | 251 609 283 | spring | | 4 | |
| 6 | 251 609 289 | concave washer | | 4 | |
| 7 | 113 609 439 E | calliper carrier | /L | 1 | |
| (7) | 113 609 440 E | calliper carrier | /R | 1 | |
| 8 | E 481 609 439 A | calliper carrier | /L | 1 | (S) |
| (8) | E 481 609 440 A | calliper carrier | /R | 1 | (S) |
| 9 | 477 609 537 D | brake shoe<br>40<br>with pad | | 4 | |
| 10 | 477 609 537 E | brake shoe<br>40<br>with pad | | 4 | (S) |
| 11 | N 013 633 1 | rivet<br>C 4 X 7,5 | | 36 | |
| 12 | 171 609 579 B | roll pin<br>37 | | 4 | |
| 13 | 113 609 601 A | pin<br>for<br>lever | | 2 | (S) |
| 14 | 211 609 601 B | pin<br>for<br>lever | | 2 | |
| 15 | N 012 228 3 | spring washer<br>B 8 | | 2 | |
| 16 | E 113 609 605 A | return spring<br>upper | | 2 | |

| Pos | Part Number | Name | Remarks | Qty | Model |
|---|---|---|---|---|---|
| 17 | 113 609 605 D | return spring<br>upper | | 4 | (S) |
| 18 | 113 609 309 B | return spring<br>lower | | 2 | |
| 19 | 311 609 609 | return spring<br>lower | | 4 | (S) |
| 20 | E 113 609 613 A | lever | /L | 1 | |
| (20) | E 113 609 614 A | lever | /R | 1 | |
| 21 | 113 609 613 C | lever | /L | 1 | (S) |
| (21) | 113 609 614 C | lever | /R | 1 | (S) |
| 22 | 211 609 619 | safety clip<br>for<br>pin | | 2 | |
| 23 | 113 609 625 | clamp<br>for<br>push rod | | 2 | |
| 24 | E 113 609 631 A | push rod | | 2 | |
| 25 | E 113 609 637 | support<br>for<br>parking-brake cable | /L | 1 | |
| (25) | E 113 609 638 | support<br>for<br>parking-brake cable | /R | 1 | |
| 26 | 900 075 087 02 | hexagon-head bolt<br>M 8 X 16 | | 2 | |
| 27 | 900 027 015 02 | lock ring<br>B 8 | | 2 | |
| 28 | 113 609 801 A | push rod | /L | 1 | (S) |
| (28) | 113 609 802 A | push rod | /R | 1 | (S) |
| 29 | E 113 609 853 | adjusting lever | /L | 1 | (S) |
| (29) | 113 609 854 | adjusting lever | /R | 1 | (S) |
| 30 | 113 609 859 | spring<br>for<br>adjusting lever | | 2 | (S) |
| 31 | 477 698 075 A | set of brake pads<br>-ENERGIT-<br>without asbestos | | 1 | |
| (31) | 477 698 076 A | set of brake pads<br>-ENERGIT-<br>without asbestos<br>oversize 0,50 mm | | 1 | |
| | | brake drum<br>see group<br>5/01/05 | | | |
| | | - -- E N D -- - | | | |

| Model | Year | MG | SG | Illustration | Restrictions | Update | | | |
|---|---|---|---|---|---|---|---|---|---|
| 924 | 85 | 6 | 03 | 603-05 | | 179 | 10:06 | 16.08.2004 | PORSCHE PET PORSCHE |

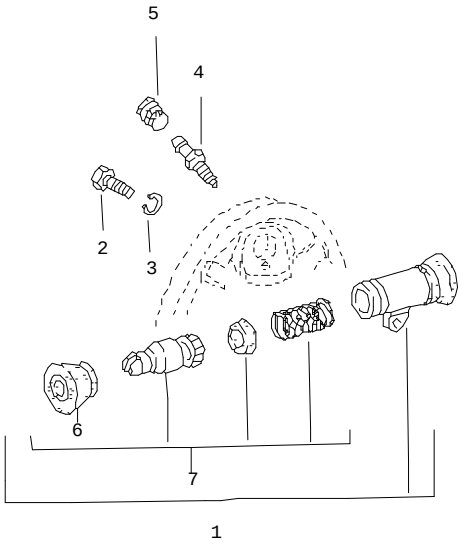


| Pos | Part Number | Name | Remarks | Qty | Model |
|---|---|---|---|---|---|
| | | wheel brake cylinder<br>rear axle | | | 924 |
| 1 | 477 611 055 E | wheel brake cylinder<br>19,05 | | 2 | |
| 2 | 900 075 087 02 | hexagon-head bolt<br>M 8 X 16 | | 2 | |
| 3 | 900 027 015 02 | lock ring<br>B 8 | | 2 | |
| 4 | 211 611 477 A | bleeder valve | | 2 | |
| 5 | 211 611 483 | dust boot | | 2 | |
| 6 | * 113 611 695 D | protection cap | | 2 | |
| 7 | * 477 698 051 | repair kit<br>wheel brake cylinder<br>19,05 | | 2 | |
| | | - -- E N D -- - | | | |

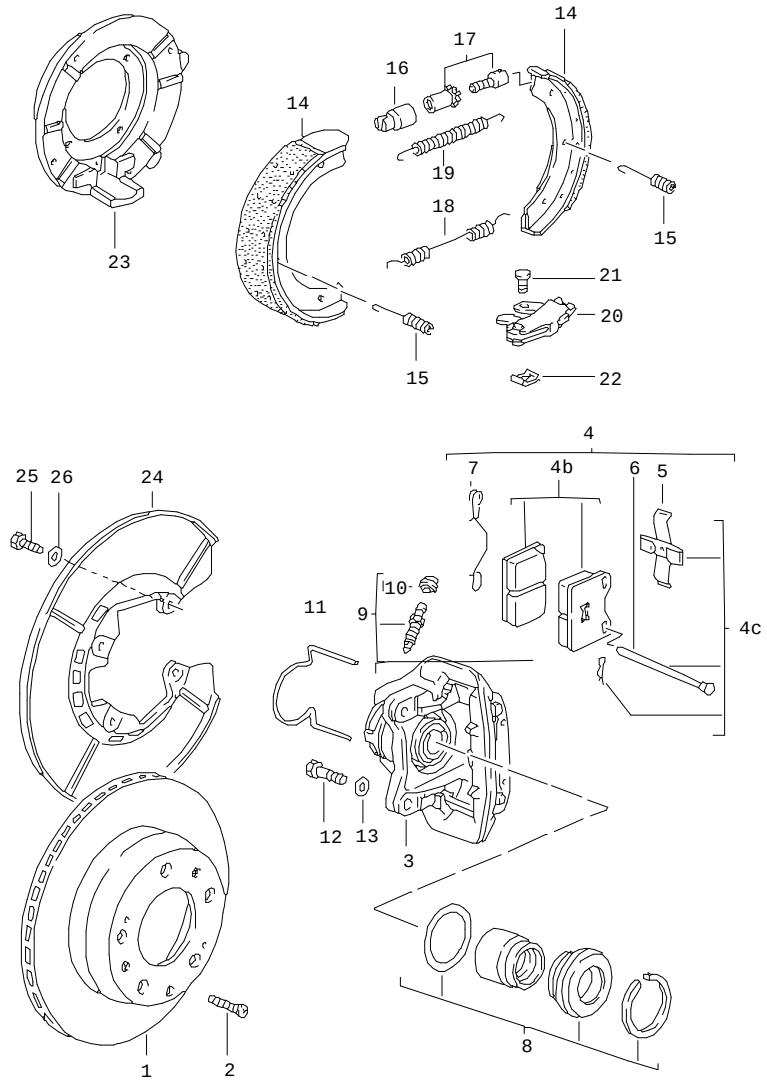


| Pos | Part Number | Name | Remarks | Qty | Model |
|---|---|---|---|---|---|
| | | disc brake<br>rear axle | | | 924,M 471<br>TURBO,GT |
| 1 | 944 352 041 02 | brake disc | | 2 | |
| 2 | N 033 167 1 | countersunk-head screw<br>M 6 X 12 | | 2 | |
| 3 | 944 352 429 00 | floating calliper<br>without pad | /L | 1 | |
| (3) | 944 352 430 00 | floating calliper<br>without pad | /R | 1 | |
| 4 | A 944 352 951 00 | set of brake pads | | 1 | |
| 4B | 944 352 951 02 | set of brake pads | | 1 | |
| 4B | 944 352 951 02 | set of brake pads | | 1 | M 475 |
| 4C | 944 352 952 00 | mounting parts | | 1 | |
| 5 | * 928 352 935 00 | expanding spring | | 2 | |
| 6 | * 928 351 936 00 | retaining pin | | 4 | |
| 7 | E 928 352 937 00 | retaining spring | | 2 | |
| 8 | * 928 352 941 00 | set of seals | | 2 | |
| 9 | 901 352 977 10 | ventilation valve | | 2 | |
| 10 | 901 351 927 10 | dust boot | | 2 | |
| 11 | 944 352 953 00 | guide spring | /L | 1 | |
| (11) | E 944 352 954 00 | guide spring | /R | 1 | |
| 12 | 900 082 077 02 | hexagon-head bolt<br>M 12 X 1,5 X 37 | | 4 | |
| 13 | N 012 232 1 | spring washer | | 4 | |
| | | handbrake | | | |
| 14 | 996 352 993 00 | repair kit<br>without asbestos | | 4 | |
| 15 | 928 352 957 02 | compression spring | | 4 | |
| 16 | 911 352 944 00 | bush | | 2 | |
| 17 | 911 352 098 00 | adjusting screw | | 2 | |

| Pos | Part Number | Name | Remarks | Qty | Model |
|---|---|---|---|---|---|
| 18 | 901 352 954 10 | return spring | | 2 | |
| 19 | 901 352 932 10 | return spring | | 2 | |
| 20 | 951 352 090 00 | expanding bow | | 2 | |
| 21 | 477 609 459 | bolt | | 2 | |
| 22 | N 900 588 01 | lock | | 2 | |
| 23 | 477 609 111 | calliper carrier | /L | 1 | |
| (23) | E 477 609 112 | calliper carrier | /R | 1 | |
| 24 | 937 352 801 00 | protective plate | | 2 | |
| 25 | N 010 210 13 | hexagon-head bolt<br>M 6 X 10 | -81 | 8 | |
| (25) | 999 072 005 09 | hexagon-head bolt<br>M 6 X 12 | 82- | 8 | |
| 26 | N 012 226 5 | spring washer<br>B 8 | | 8 | |
| | | - -- E N D -- - | | | |

| Model | Year | MG | SG | Illustration | Restrictions | Update | | | | |
|---|---|---|---|---|---|---|---|---|---|---|
| 924 | 85 | 6 | 04 | 604-00 | | 179 | 10:06 | 16.08.2004 | PORSCHE | PET | PORSCHE |

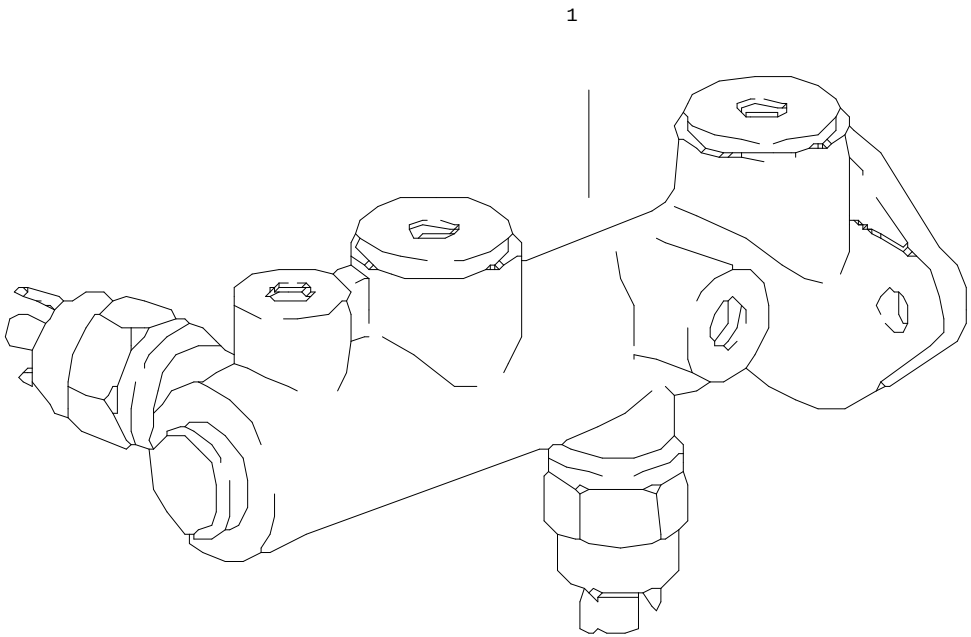


| Pos | Part Number | Name | Remarks | Qty | Model |
|---|---|---|---|---|---|
| | | brake master cylinder | | | |
| 1 | 477 611 017 | brake master cylinder<br>with<br>stop light switch | 80 | 1 | 924,TURBO |
| (1) | 477 611 017 A | brake master cylinder | 81- | 1 | 924,TURBO |
| (1) | 944 355 011 01 | brake master cylinder | | 1 | GT |
| - | * 928 355 913 00 | repair kit<br>brake master cylinder | 80 | 1 | 924,TURBO |
| - | 944 355 911 01 | repair kit<br>brake master cylinder | | 1 | GT |
| | | stop light switch<br>see group<br>9/06/00 | | | |
| | | - -- E N D -- - | | | |

| Model | Year | MG | SG | Illustration | Restrictions | Update | 10:06 | 16.08.2004 | PORSCHE | PET | PORSCHE |
|---|---|---|---|---|---|---|---|---|---|---|---|
| 924 | 85 | 6 | 04 | 604-05 | | 179 | | | | | |

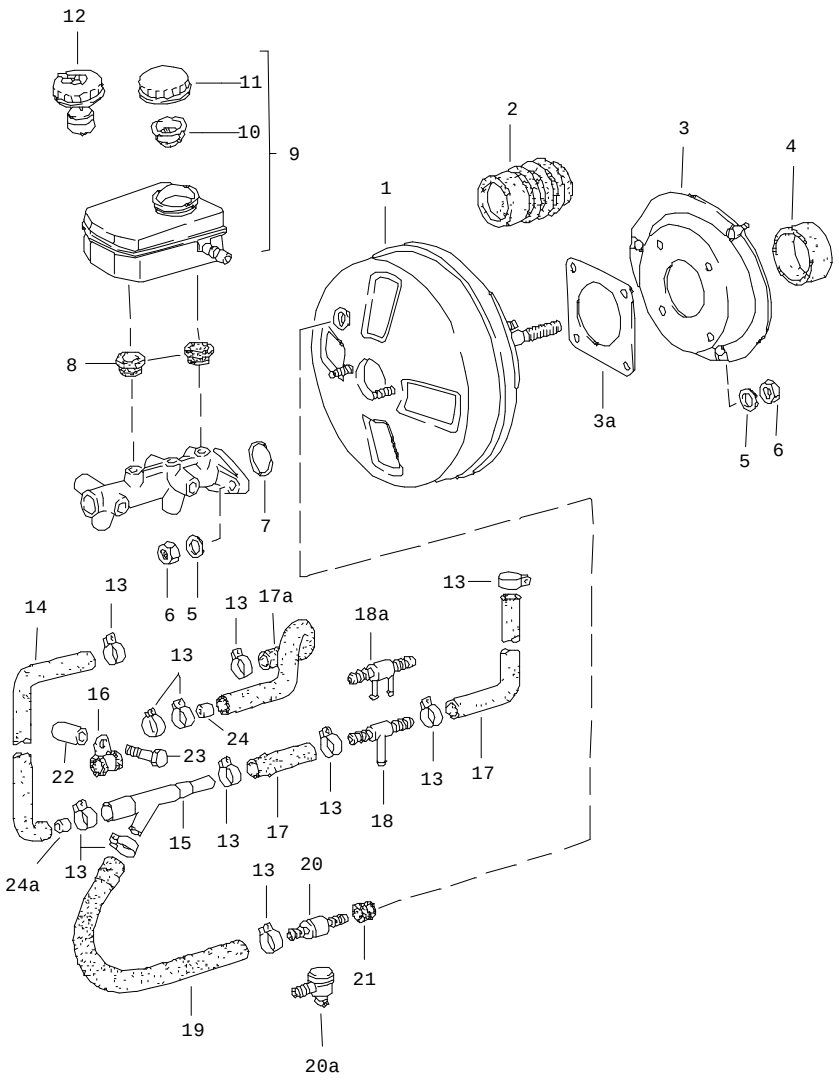


| Pos | Part Number | Name | Remarks | Qty | Model |
|---|---|---|---|---|---|
| | | brake booster<br>expansion tank | | | |
| 1 | 477 612 107 G | brake booster | | 1 | 924 |
| (1) | 477 612 107 F | brake booster | | 1 | 924,M 471<br>TURBO,GT |
| 2 | 477 611 115 | bellows | | 1 | |
| 3 | 477 611 945 D | intermediate piece | | 1 | |
| 3A | 477 611 951 | gasket | | 1 | |
| (4) | 477 611 969 D | gasket | | 1 | |
| 5 | 900 025 007 02 | washer | | 9 | |
| 6 | 900 076 025 02 | hexagon nut<br>M 8 | | 9 | |
| 7 | 251 611 243 | sealing ring | | 1 | |
| 8 | W 211 611 817 A | plug | | 2 | |
| 8 | 911 355 922 00 | plug | | 2 | |
| 9 | 477 611 303 | expansion tank | -80 | 1 | |
| (9) | 477 611 303 B | expansion tank | -80 | 1 | M 592 |
| (9) | 477 611 303 B | expansion tank | 81- | 1 | |
| 10 | E 477 611 381 | strainer | -80 | 1 | |
| (10) | 477 611 385 A | bush | -80 | 1 | M 592 |
| (10) | 477 611 385 A | bush | 81- | 1 | |
| 11 | 477 611 361 | cover | -80 | 1 | |
| 12 | 477 611 351 B | cover<br>with float | -80 | 1 | M 592 |
| 12 | 477 611 351 B | cover<br>with float | 81- | 1 | |
| 13 | N 024 510 1 | hose clamp | | 9 | |
| 14 | 477 612 147 A | vacuum hose<br>it is necessary to rework | 80-<br>82- | 1 | TURBO,GT |
| 15 | 035 133 753 A | venturi tube | | 1 | |

| Pos | Part Number | Name | Remarks | Qty | Model |
|---|---|---|---|---|---|
| 16 | N 020 607 1 | clamp | | 1 | |
| - | 999 181 022 51 | hose | | * | TURBO,GT |
| 17 | - | 400 MM | | 1 | |
| 17A | 477 612 153 A | hose | | 1 | 924 |
| 18 | 321 611 813 | t-socket | | 1 | |
| 19 | 477 612 149 | elbow | | 1 | TURBO,GT |
| (19) | 477 612 155 | elbow | | 1 | 924 |
| (20) | 431 611 933 | check valve | | 1 | TURBO,GT |
| 20A | 191 611 933 F | check valve | | 1 | 924 |
| (20A) | 477 611 933 A | check valve | 82- | 1 | M 573 |
| 21 | 911 355 921 00 | rubber seal | | 1 | |
| 22 | 931 107 143 00 | spacer sleeve | -80 | 1 | TURBO |
| 23 | 900 074 040 02 | hexagon-head bolt M 8 X 50 | -80 | 1 | TURBO |
| 24 | 928 355 515 00 | nozzle | -81 | 1 | 924 |
| 24A | 928 355 515 01 | nozzle | 82- | 1 | 924 |
| | | - -- E N D -- - | | | |

| Pos | Part Number | Name | Remarks | Qty | Model |
|---|---|---|---|---|---|

| Model | Year | MG | SG | Illustration | Restrictions | Update | | | | |
|---|---|---|---|---|---|---|---|---|---|---|
| 924 | 85 | 6 | 04 | 604-10 | | 179 | 10:06 | 16.08.2004 | PORSCHE | PET | PORSCHE |

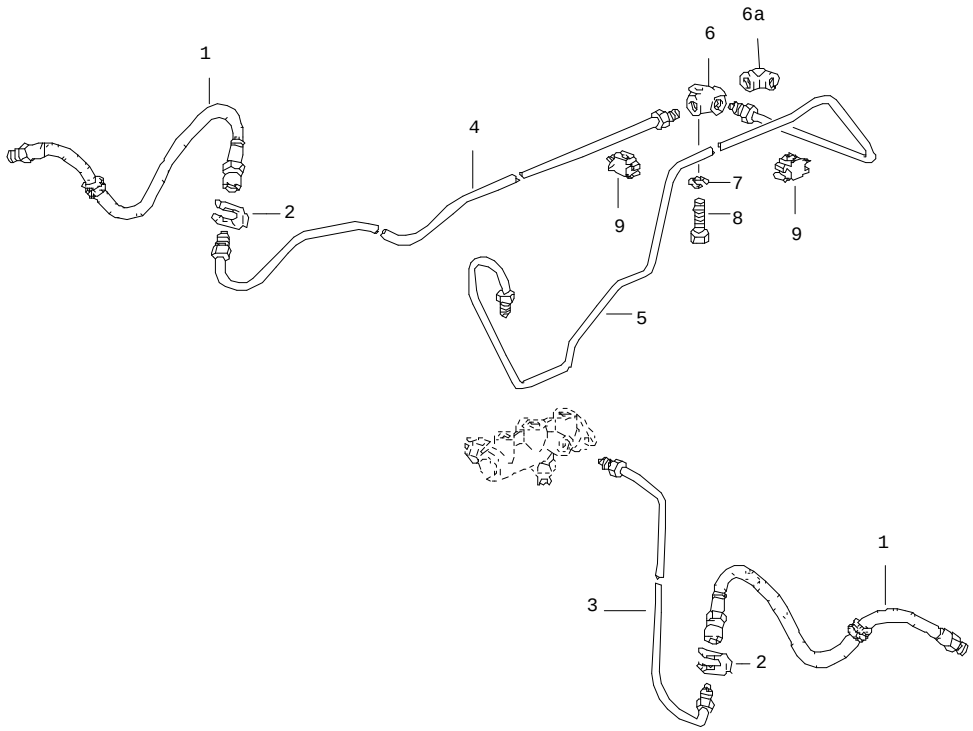


| Pos | Part Number | Name | Remarks | Qty | Model |
|---|---|---|---|---|---|
| | | brake lines<br>front | | | |
| 1 | 477 611 071 A | brake hose | | 2 | 924 |
| (1) | 477 611 071 B | brake hose | | 2 | 924,M 471<br>TURBO,GT |
| 2 | 113 611 715 A | brake hose bracket | | 2 | |
| 3 | 477 611 723 A | brake line | /L | 1 | 924,TURBO |
| (3) | 944 355 029 01 | brake line | /L | 1 | GT |
| 4 | 477 611 724 A | brake line | /R | 1 | |
| 5 | 477 611 739 B | brake line | | 1 | 924,TURBO |
| (5) | 937 355 630 00 | brake line | | 1 | GT |
| 6 | 113 611 755 | distributing piece | | 1 | 924,TURBO |
| 6A | 901 355 615 00 | angled pipe | | 1 | GT |
| 7 | N 012 226 5 | spring washer<br>B 8 | | 1 | 924,TURBO |
| 8 | 900 075 016 02 | hexagon-head bolt<br>M 6 X 22 | | 1 | 924,TURBO |
| 9 | 477 611 767 B | cable clip | -9.81 | 7 | |
| 9 | 811 611 797 | clip | 10.81- | 7 | |
| | | - -- E N D -- - | | | |

| Model | Year | MG | SG | Illustration | Restrictions | Update | | | | |
|---|---|---|---|---|---|---|---|---|---|---|
| 924 | 85 | 6 | 04 | 604-15 | | 179 | 10:07 | 16.08.2004 | PORSCHE | PET | PORSCHE |

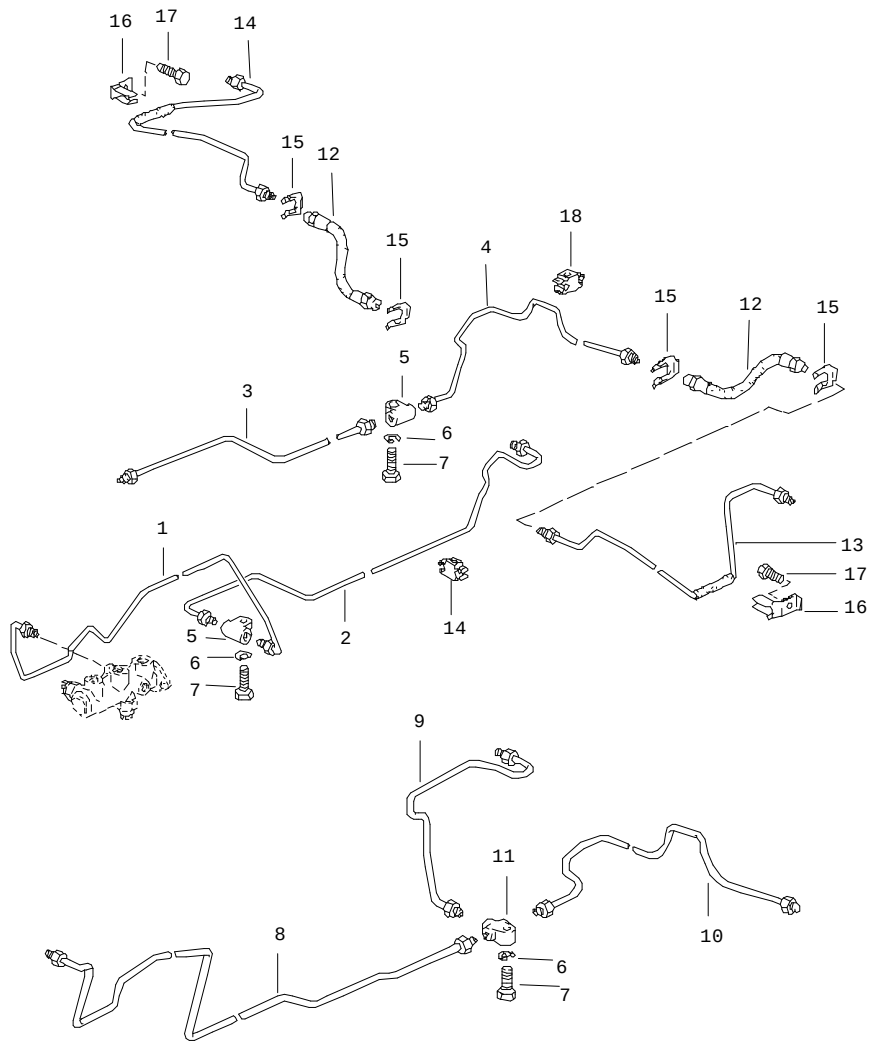


| Pos | Part Number | Name | Remarks | Qty | Model |
|---|---|---|---|---|---|
| | | brake lines<br>rear | | | |
| 1 | 477 611 744 B | brake line | /R | 1 | 924,TURBO |
| 2 | 477 611 746 B | brake line | /R | 1 | 924,TURBO |
| 3 | 477 611 741 B | brake line | /L | 1 | 924,TURBO |
| 4 | 477 611 745 A | brake line | /L | 1 | 924,TURBO |
| 5 | 113 611 791 | connecting piece | | 2 | 924,TURBO |
| 6 | N 012 226 5 | spring washer<br>B 6 | | 3 | |
| 7 | 900 075 016 02 | hexagon-head bolt<br>M 6 X 22 | | 3 | |
| 8 | 937 355 631 00 | brake line | | 1 | GT |
| 9 | 937 355 632 00 | brake line | /R | 1 | GT |
| 10 | 944 355 033 00 | brake line | /L | 1 | GT |
| 11 | 113 611 755 | distributing piece | | 1 | GT |
| 12 | 477 611 775 | brake hose | | 2 | |
| 13 | 477 611 781 | brake line | /L | 1 | 924 |
| (13) | E 477 611 781 A | brake line | /L | 1 | 924,M 471<br>TURBO,GT |
| 14 | E 477 611 782 | brake line | /R | 1 | 924 |
| (14) | 477 611 782 A | brake line | /R | 1 | 924,M 471<br>TURBO,GT |
| 15 | 113 611 715 A | hose holder | | 4 | |
| 16 | 477 611 783 | support | | 2 | 924,M 471<br>TURBO,GT |
| 17 | N 010 210 13 | hexagon-head bolt<br>M 6 X 10 | | 2 | |
| 18 | 477 611 767 B | cable clip | -9. 81 | 9 | |
| (18) | 811 611 797 | clip | 10.81- | 9 | |
| | | - -- E N D -- - | | | |

| Model | Year | MG | SG | Illustration | Restrictions | Update | | |
|---|---|---|---|---|---|---|---|---|
| 924 | 85 | 6 | 98 | REP | | 179 | 10:47 | 16.08.2004 |

| Pos | Part Number | Name | Remarks | Qty | Model |
|---|---|---|---|---|---|
| | | repair kits | | | |
| >> | > 477 698 151 A | set of brake pads<br>for<br>floating calliper<br>comprising:<br>brake pad | /V<br>-80 | 1<br><br><br><br>4 | 924<br>TURBO,M 472 |
| - | 803 615 269 C | expanding spring | | 2 | |
| - | 803 615 261 B | retaining pin | | 4 | |
| >> | > 928 352 951 02 | set of brake pads<br>comprising:<br>brake pad | /V<br>-80 | 1<br><br>4 | 924<br>TURBO,M 472 |
| >> | > 477 698 163 | parts set<br>comprising:<br>expanding spring<br>retaining pin | /V<br>-80 | 1<br><br>2<br>4 | 924<br>TURBO,M 472 |
| >> | > 803 698 471 C | set of seals<br>for<br>floating calliper<br>comprising:<br>sealing ring<br>circlip<br>slide<br>protection cap | /V<br>-80 | 2<br><br><br><br>1<br>1<br>2<br>1 | 924<br>TURBO,M 472 |
| >> | > 477 698 075 A | set of brake pads<br>- jurid -<br>comprising:<br>brake pad | /H | 1<br><br><br>4 | |
| - | N 013 633 1 | rivet<br>C 4 X 7,5 | | 45 | |
| >> | > 477 698 075 A | set of brake pads<br>- energit -<br>without asbestos<br>comprising:<br>brake pad | /H | 1<br><br><br><br>4 | |
| - | N 013 633 1 | rivet<br>C 4 X 7,5 | | 45 | |
| >> | > 477 698 076 A | set of brake pads<br>- jurid -<br>oversize 0,50 mm<br>comprising:<br>brake pad | /H | 1<br><br><br><br>4 | |
| - | N 013 633 1 | rivet<br>C 4 X 7,5 | | 45 | |

| Model | Year | MG | SG | Illustration | Restrictions | Update | | |
|---|---|---|---|---|---|---|---|---|
| 924 | 85 | 6 | 98 | REP | | 179 | 10:47 | 16.08.2004 |

| Pos | Part Number | Name | Remarks | Qty | Model |
|---|---|---|---|---|---|
| >> | > 477 698 076 A | set of brake pads<br>- energit -<br>without asbestos<br>oversize 0,50 mm<br>comprising:<br>brake pad | /H | 1<br><br><br><br><br>4 | |
| - | N 013 633 1 | rivet<br>C 4 X 7,5 | | 45 | |
| >> | > 477 698 051 | repair kit<br>for<br>wheel brake cylinder<br>19.05<br>comprising:<br>spring<br>filler piece<br>boot<br>piston | /H<br>-80 | 2<br><br><br><br><br>1<br>2<br>2<br>2 | 924<br>TURBO,M 472 |
| - | 113 611 695 D | protection cap | | 2 | |
| >> | > 477 698 155 | set of brake pads<br>(JURID 209-380)<br>comprising:<br>brake pad | /V | 1<br><br><br>4 | TURBO<br>924,M 471 |
| - | 928 351 935 00 | expanding spring | | 2 | |
| - | 928 351 936 00 | retaining pin | | 4 | |
| - | 477 615 112 | retaining spring | | 2 | |
| >> | > 944 351 951 02 | set of brake pads<br>comprising:<br>brake pad | /V | 1<br><br>4 | TURBO,GT<br>924,M 471 |
| >> | > 944 351 951 02 | set of brake pads<br>comprising:<br>brake pad | /V | 1<br><br>4 | M 475,TURBO<br>GT,924 M 471 |
| >> | > 944 351 952 01 | mounting parts<br>comprising:<br>expanding spring<br>retaining pin<br>retaining spring<br>safety seal | /V | 1<br><br>2<br>4<br>2<br>2 | TURBO,GT<br>924,M 471 |
| >> | > 928 351 941 00 | set of seals<br>for<br>floating calliper<br>comprising:<br>gasket<br>protection cap<br>circlip | /V | 2<br><br><br><br>1<br>1<br>1 | TURBO<br>924,M 471 |
| >> | > 477 698 157 | set of brake pads<br>(JURID 231)<br>comprising:<br>brake pad | /H | 1<br><br><br>4 | TURBO<br>924,M 471 |

| Model | Year | MG | SG | Illustration | Restrictions | Update | | |
|---|---|---|---|---|---|---|---|---|
| 924 | 85 | 6 | 98 | REP | | 179 | 10:47 | 16.08.2004 |

| Pos | Part Number | Name | Remarks | Qty | Model |
|---|---|---|---|---|---|
| - | 928 352 935 00 | expanding spring | | 2 | |
| - | 928 351 936 00 | retaining pin | | 4 | |
| - | E 928 352 937 00 | retaining spring | | 2 | |
| >> | > 944 352 951 02 | set of brake pads<br>comprising:<br>brake pad | /H | 1<br><br>4 | TURBO,GT<br>924,M 471 |
| >> | > 944 352 951 02 | set of brake pads<br>comprising:<br>brake pad | /H | 1<br><br>4 | M 475,TURBO<br>GT,924,M 471 |
| >> | > 944 352 952 00 | mounting parts<br>comprising:<br>expanding spring<br>retaining pin<br>retaining spring<br>safety seal | /H | 1<br><br>2<br>4<br>2<br>4 | TURBO,GT<br>924,M 471 |
| >> | > 928 352 941 00 | set of seals<br>for<br>floating calliper<br>comprising:<br>gasket<br>protection cap<br>circlip<br>slide | /H | 2<br><br><br><br>1<br>1<br>1<br>2 | TURBO<br>924,M 471 |
| >> | > 928 355 913 00 | repair kit<br>for<br>brake master cylinder<br>23,81 MM | 80 | 1 | 924,TURBO |
| >> | > 937 355 913 00 | repair kit<br>for<br>brake master cylinder<br>23,81 MM/19,05 MM | | 1 | GT |
| | | - -- E N D -- - | | | |

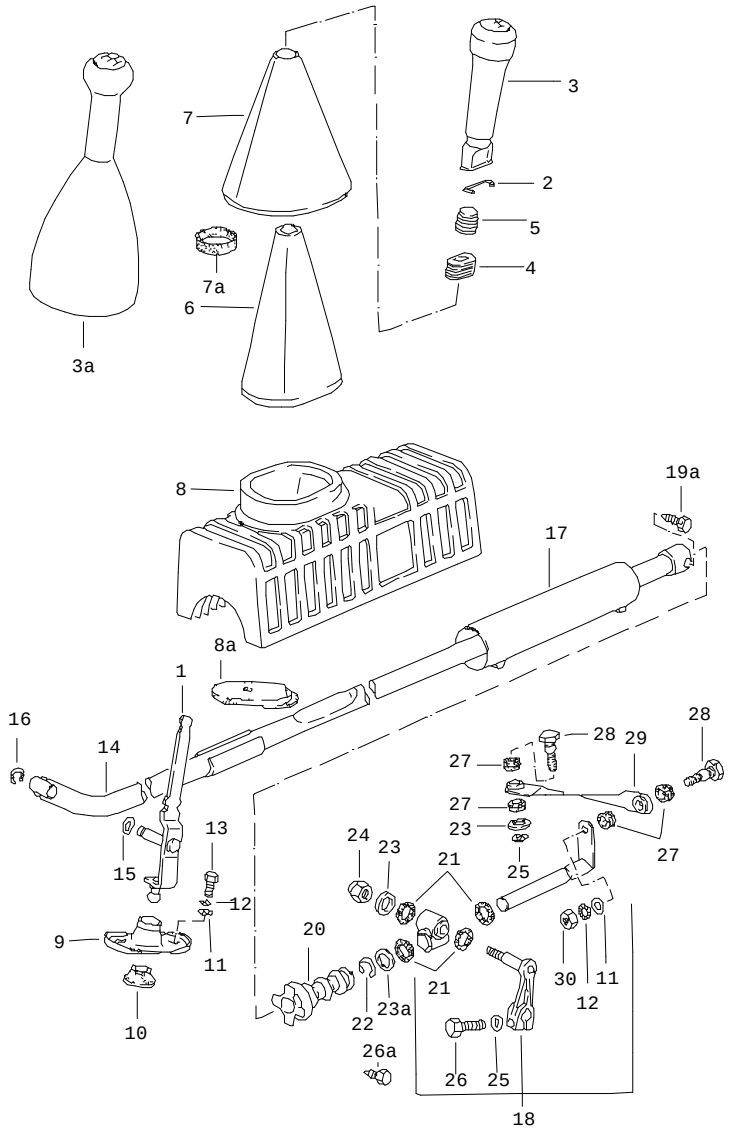


| Pos | Part Number | Name | Remarks | Qty | Model |
|---|---|---|---|---|---|
| | | shift mechanism<br>manual transmission | | | 016.8/9/G |
| 1 | 477 711 205 D | gearshift lever | | 1 | |
| 2 | 477 711 269 | retainer spring | | 1 | |
| 3 | 477 711 289 A | gearshift knob<br>leatherette | | 1 | 016.8/9 |
| | 01C | black | | | |
| 3A | 931 424 075 00 | gearshift knob<br>with<br>boot<br>leather | 81- | 1 | |
| | 1AJ | black | | | |
| | 3NG | brown | | | |
| 4 | 477 711 219 | vibration damper | | 1 | 016.8/9 |
| (4) | 931 424 111 00 | vibration damper | 81- | 1 | |
| 5 | 477 711 217 | vibration damper | | 1 | 016.8/9 |
| (5) | 931 424 110 00 | vibration damper | 81- | 1 | |
| 6 | 477 711 270 B | inner sleeve | | 1 | |
| 7 | 477 711 252 C | boot | | 1 | 016.8/9 |
| (7) | 477 711 252 B | boot<br>leather | -80 | 1 | 016.8/9 |
| | 1AJ | black | | | |
| | 3NG | brown | | | |
| 7A | 477 711 257 | rubber ring | | 1 | |
| 8 | 477 711 239 | sound absorber | | 1 | |
| (8) | 477 711 239 | sound absorber | 81 | 1 | |
| 8A | 477 711 270 B | inner sleeve | 81 | 1 | |
| 9 | 944 424 229 00 | bearing bracket | | 1 | |
| 10 | 944 424 231 01 | bearing shell | | 1 | |
| 11 | N 011 525 13 | washer<br>A 8,4 | | 3 | |

| Pos | Part Number | Name | Remarks | Qty | Model |
|---|---|---|---|---|---|
| 12 | N 012 108 2 | serrated lock washer<br>8,4 | | 3 | |
| 13 | N 010 237 6 | hexagon-head bolt<br>M 8 X 12 | | 2 | |
| 14 | 944 424 019 00 | gear shift rod | | 1 | |
| 15 | 900 028 005 02 | spring washer<br>A 10 | | 1 | |
| 16 | N 012 437 1 | lock washer | | 1 | |
| 17 | 477 711 285 | protective tube | | 1 | |
| 18 | 477 711 103 C | intermediate shift lever | -80 | 1 | 016.8/9 |
| (18) | 477 711 103 D | intermediate shift lever | 81- | 1 | |
| 19 | 823 711 833 | hexagon-head bolt | | 1 | |
| 20 | 477 711 159 B | bellows | | 1 | |
| 21 | 477 711 149 | sealing ring | | 4 | |
| 22 | N 012 415 1 | circlip<br>15 X 1 | | 1 | |
| 23 | 311 827 181 | washer | | 2 | |
| 23A | 477 711 139 A | washer | | 1 | |
| 24 | 803 253 111 | lock nut<br>M 8 | | 1 | |
| 25 | N 012 241 11 | spring washer<br>B 8 X 15 | | 2 | |
| 26 | N 010 233 6 | hexagon-head bolt<br>M 8 X 28 | -80 | 1 | 016.8/9 |
| 26A | 443 711 189 A | hexagon-head bolt | 81- | 1 | |
| 27 | 477 711 155 A | sealing ring | | 4 | |
| 28 | 477 711 147 A | ball pin | | 2 | |
| 29 | 944 424 141 00 | joint rod | | 1 | |
| 30 | N 011 008 8 | hexagon nut<br>M 8 | | 1 | |
| | | - -- E N D -- - | | | |

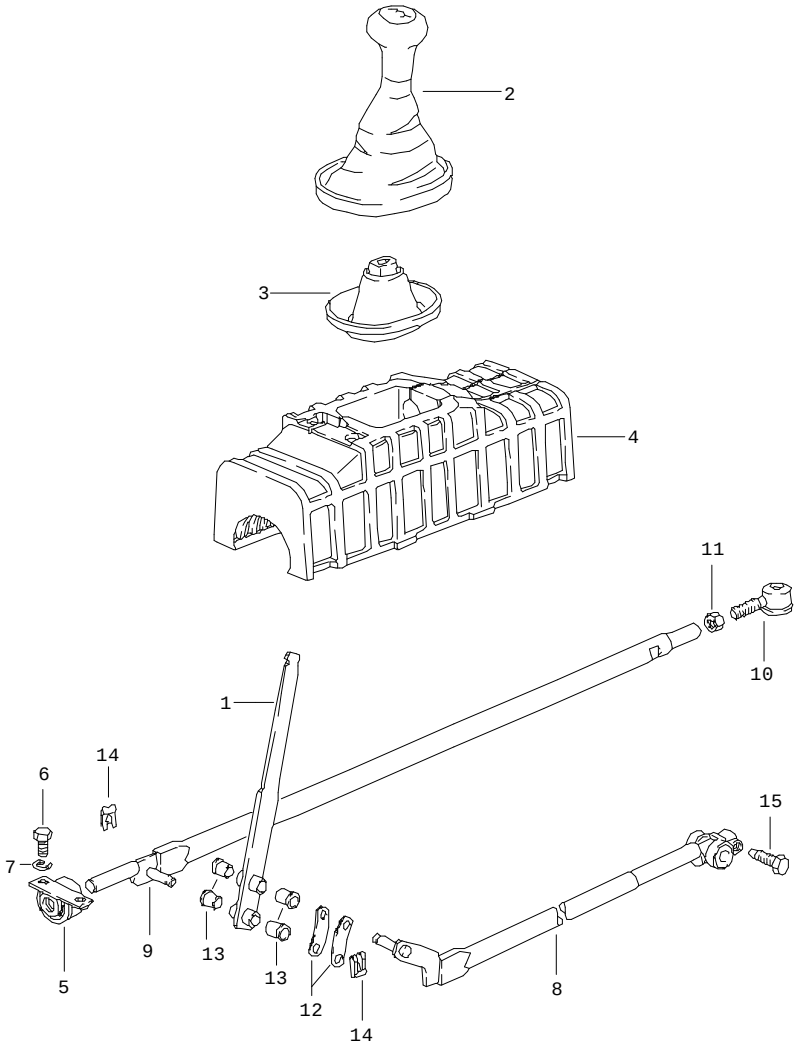


| Pos | Part Number | Name | Remarks | Qty | Model |
|---|---|---|---|---|---|
| | | shift mechanism<br>manual transmission | | | G31.01/02/03 |
| 1 | 477 711 206 B | gearshift lever | | 1 | |
| 2 | 928 424 073 01 | gearshift knob<br>with<br>boot | | 1 | |
| | 1AJ | black | | | |
| | 3NG | brown | | | |
| 3 | 477 711 270 | inner sleeve | | 1 | |
| 4 | E 477 711 240 | insulation | | 1 | |
| 5 | 477 711 237 A | bearing bracket | | 1 | |
| 6 | N 010 210 13 | hexagon-head bolt<br>M 6 X 10 | | 2 | |
| 7 | N 012 226 5 | spring washer<br>A 6 | | 2 | |
| 8 | 477 711 106 | gear shift rod | | 1 | |
| 9 | 477 711 154 | guiding rod | | 1 | |
| 10 | 477 711 176 A | angular joint | | 1 | |
| 11 | 900 034 003 02 | hexagon nut<br>BM 10 | | 1 | |
| 12 | 477 711 216 | leaf spring | | 2 | |
| 13 | 999 924 002 40 | plain bearing | | 4 | |
| 14 | 999 166 034 02 | sl-lock | | 2 | |
| 15 | 901 424 229 00 | conical screw | | 1 | |
| | | - -- E N D -- - | | | |

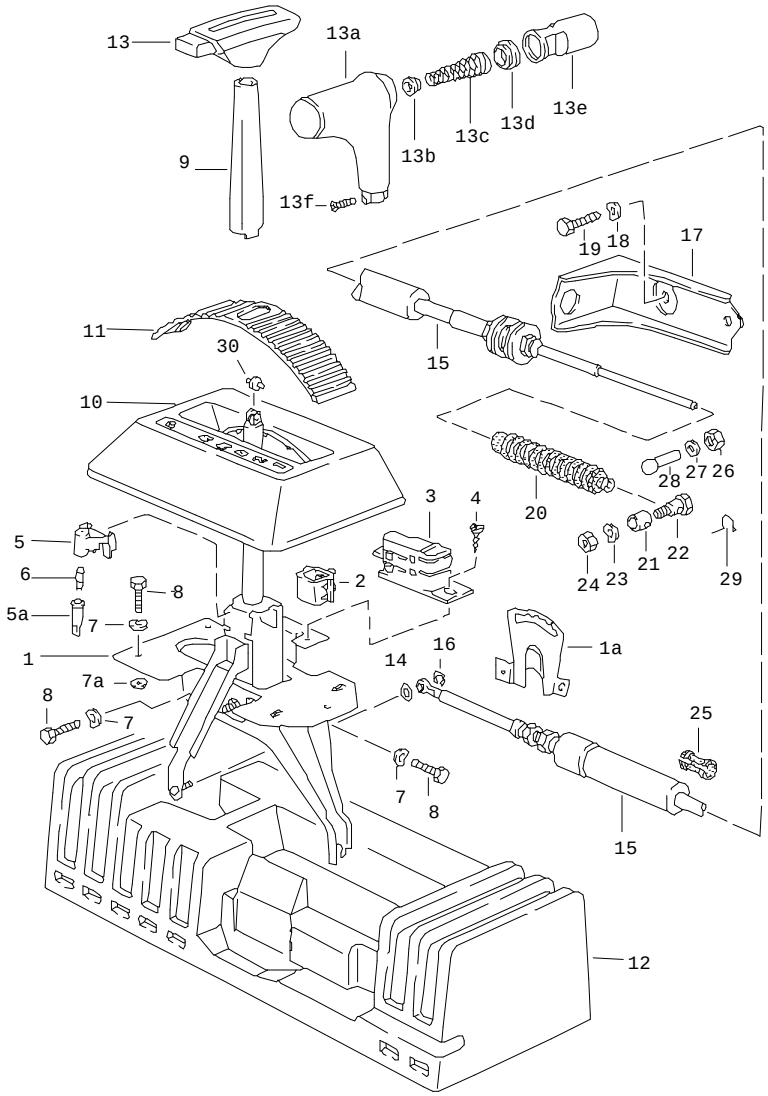


| Pos | Part Number | Name | Remarks | Qty | Model |
|---|---|---|---|---|---|
| | | shift mechanism<br>automatic transmission | | | |
| 1 | 477 713 025 A | shift mechanism | -82 | 1 | |
| (1) | 944 426 025 02 | gearshift bracket | 83- | 1 | |
| 1A | 944 426 109 01 | locking segment | | 1 | |
| 2 | 171 927 145 A | contacts | | 1 | |
| 3 | 311 927 147 B | support for contact | | 1 | |
| 4 | N 013 968 1 | tapping screw<br>B 4,8 X 13 | | 2 | |
| 5 | 321 713 855 A | bulb holder | | 1 | |
| 5A | 111 919 243 | bulb holder | | 1 | |
| 6 | 900 631 129 90 | bulb | | 1 | |
| 7 | N 012 226 5 | spring washer<br>B 6 | | 5 | |
| 7A | N 900 067 01 | washer<br>6,4 | | 3 | |
| 8 | N 010 215 13 | hexagon-head bolt<br>M 6 X 15 | | 2 | |
| 8A | N 010 217 9 | hexagon-head bolt<br>M 6 X 20 | | 3 | |
| 9 | 477 713 279 | cover | -82 | 1 | |
| (9) | 944 426 279 00 | cover | 83- | 1 | |
| | 01C | black | | | |
| | 89S | brown | | | |
| 10 | 477 713 111 | cover | | 1 | |
| | 01C | black | | | |
| | 89S | cadbury brown | | | |
| 11 | 477 713 277 | cover strip | | 1 | |
| 12 | A 477 713 115 | sound absorber<br>use | | 1 | |

| Pos | Part Number | Name | Remarks | Qty | Model |
|---|---|---|---|---|---|
| (12) | 944 426 182 01 | sound absorber<br>it is necessary to rework | | 1 | |
| (12) | 944 426 181 00 | sound absorber<br>it is necessary to rework | | 1 | |
| 13 | 171 713 139 | selector knob | -82 | 1 | |
| | GH1 | black | | | |
| 13A | 928 426 077 00 | selector knob | 83- | 1 | |
| | 1AJ | black | | | |
| | 4RB | brown | | | |
| 13B | 922 424 203 00 | concave washer | 83- | 1 | |
| 13C | 922 424 176 03 | compression spring | 83- | 1 | |
| 13D | 922 424 201 00 | concave washer | 83- | 1 | |
| 13E | 928 426 174 01 | adjusting lever | 83- | 1 | |
| 13F | N 033 165 1 | countersunk-head screw<br>M 4 X 8 | | 2 | |
| 14 | E 473 867 471 | sealing ring | | 1 | |
| 15 | 477 713 265 A | cable | -80 | 1 | |
| (15) | 477 713 265 C | cable | 81- | 1 | |
| 16 | N 012 325 1 | lock washer | | 1 | |
| 17 | 477 713 281 A | retaining bracket | | 1 | |
| 18 | N 012 038 1 | lock ring<br>B 8 | | 2 | |
| 19 | N 010 240 16 | hexagon-head bolt<br>M 8 X 20 | | 2 | |
| 20 | 311 713 269 A | sealing sleeve | -80 | 1 | |
| (20) | 477 609 715 | sealing sleeve | 81- | 1 | |
| 21 | 311 713 291 A | clamping bush | -80 | 1 | |
| 22 | E 311 713 293 | clamping bolt | -80 | 1 | |
| 23 | N 012 241 11 | spring washer<br>B 8 X 15 | -80 | 1 | |
| 24 | N 011 118 14 | hexagon nut<br>M 8 | -80 | 1 | |
| 25 | 431 609 781 | protective tube | | 2 | |
| 26 | N 011 005 14 | hexagon nut<br>M 5 | 81- | 1 | |
| 27 | 900 151 027 02 | washer<br>B 5,3 | 81- | 1 | |
| 28 | 911 423 147 00 | ball socket | 81- | 1 | |
| 29 | E 900 169 014 02 | securing clip | 81- | 1 | |
| 30 | 321 713 137 | roller | | 1 | |

- -- E N D -- -

| Model | Year | MG | SG | Illustration | Restrictions | Update | | | | |
|---|---|---|---|---|---|---|---|---|---|---|
| 924 | 85 | 7 | 01 | 701-15 | | 179 | 10:07 | 16.08.2004 | PORSCHE | PET | PORSCHE |

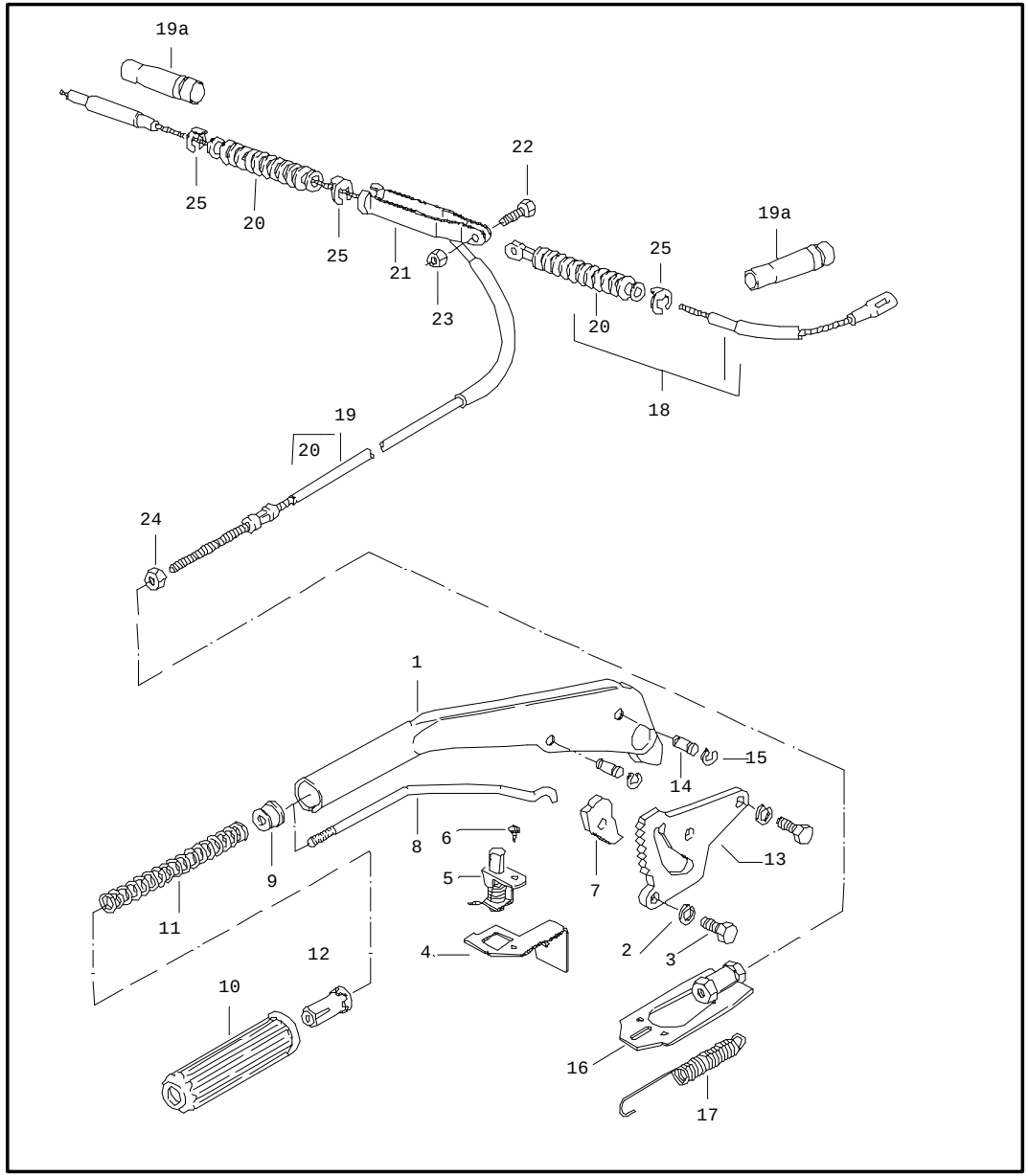


| Pos | Part Number | Name | Remarks | Qty | Model |
|---|---|---|---|---|---|
| | | parking-brake lever | | | |
| 1 | 477 711 305 B | parking-brake lever | | 1 | 924 |
| (1) | 477 711 305 B | parking-brake lever | 84- | 1 | 924 |
| (1) | 477 711 305 A | parking-brake lever | -83 | 1 | 924,M 471 TURBO,GT |
| (1) | 944 424 052 00 | parking-brake lever | 84- | 1 | TURBO |
| 2 | 900 027 015 02 | lock ring<br>B 8 | | 2 | |
| 3 | N 010 239 11 | hexagon-head bolt<br>M 8 X 18 | | 2 | |
| 4 | 477 711 317 | support | /LL | 1 | |
| (4) | E 478 711 318 | support | /RL | 1 | |
| 5 | 968 613 601 00 | contact switch | | 1 | |
| 6 | N 013 957 5 | tapping screw<br>B 3,5 X 9,5 | | 1 | |
| 7 | 823 711 321 | pawl | | 1 | |
| 8 | 481 711 325 | rod | | 1 | |
| 9 | 481 711 327 | spring sleeve | | 1 | |
| 10 | 839 711 327 | grip | | 1 | |
| | 01C | black | | | |
| 11 | 191 711 329 | spring | | 1 | |
| 12 | 113 711 333 B | push button | | 1 | |
| 13 | 477 711 339 B | tooth sector | | 1 | |
| 13 | 944 424 252 00 | tooth sector | | 1 | 924,M 471 TURBO,GT |
| 14 | 251 711 341 A | pin | | 2 | |
| 15 | N 012 437 1 | lock washer | | 4 | |
| - | 944 424 352 00 | pin | 84- | 1 | |
| - | 900 910 022 09 | lock nut<br>M8 | 84- | 1 | |

| Pos | Part Number | Name | Remarks | Qty | Model |
|---|---|---|---|---|---|
| 16 | 477 711 973 | connecting piece | | 1 | |
| 17 | 477 711 975 | return spring | | 1 | |
| 18 | 477 609 719 | parking-brake cable<br>995 MM | -80 | 1 | 924<br>TURBO,M 472 |
| 19 | 477 609 720 | parking-brake cable<br>2035 MM | -80 | 1 | 924<br>TURBO,M 472 |
| 18 | 477 609 719 C | parking-brake cable<br>925 MM | | 1 | 924,M 471<br>TURBO,GT |
| (19) | 477 609 720 C | parking-brake cable<br>1975 MM | | 1 | 924,M 471<br>TURBO,GT |
| 19A | 477 609 723 | guide tube | | 2 | 924,M 471<br>TURBO,GT |
| 20 | 477 609 715 | sealing sleeve | | 2 | |
| - | N 020 906 3 | tie-wrap<br>6,5 X 450 | | 2 | |
| 21 | 477 711 965 | compensating bow | | 1 | |
| 22 | N 010 217 4 | hexagon-head bolt<br>M 6 X 20 | | 1 | |
| 23 | 900 910 012 02 | lock nut<br>M 6 | | 1 | |
| 24 | 900 076 010 02 | hexagon nut<br>M 6 | | 1 | |
| 25 | N 012 328 1 | lock | | 3 | |
| 26 | 999 513 025 40 | tie-wrap<br>for<br>parking-brake cable<br>rear-axle cross-tube | | 2 | |
| | | - -- E N D -- - | | | |

| Model | Year | MG | SG | Illustration | Restrictions | Update | | | | |
|---|---|---|---|---|---|---|---|---|---|---|
| 924 | 85 | 7 | 02 | 702-00 | | 179 | 10:07 | 16.08.2004 | PORSCHE | PET | PORSCHE |

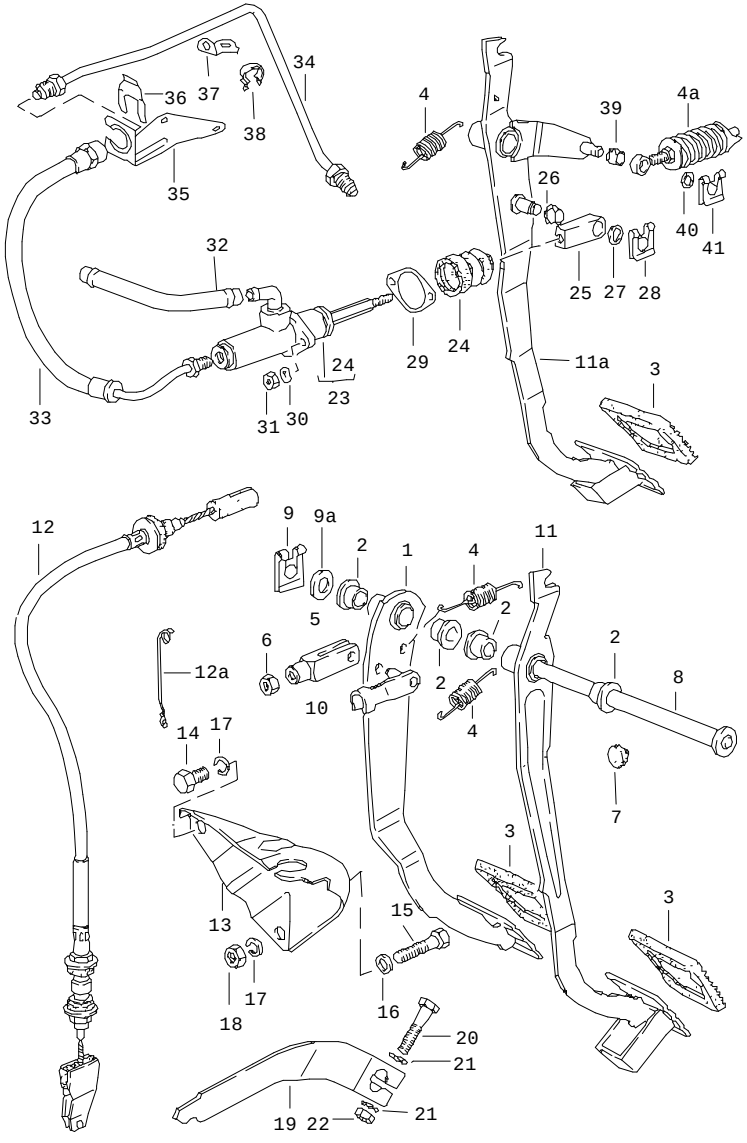


| Pos | Part Number | Name | Remarks | Qty | Model |
|---|---|---|---|---|---|
| | | brake<br>clutch<br>pedals<br>left-hand drive | | | |
| 1 | 477 721 141 | brake pedal | | 1 | |
| (1) | 477 723 141 | brake pedal | | 1 | 924,AUT. |
| 2 | 443 721 153 A | bearing sleeve | | 4 | |
| 3 | 823 721 173 | cap | | 2 | |
| (3) | 827 723 173 | cap | | 1 | 924,AUT. |
| 4 | 321 721 191 | return spring | | 2 | |
| 4A | 477 721 353 A | clutch power spring | | 1 | TURBO,GT |
| 5 | 803 721 213 | clevis | | 1 | |
| 6 | N 011 010 6 | hexagon nut<br>M 10 | | 1 | |
| 7 | 999 703 183 40 | buffer | | 1 | |
| 8 | 843 721 309 | bolt<br>12 X 185 X 180 | | 1 | |
| (8) | N 023 151 2 | bolt<br>12 X 144 X 139 | | 1 | 924,AUT. |
| 9 | N 012 653 1 | lock | | 1 | |
| 9A | 311 955 255 | washer | | 1 | |
| 10 | N 023 476 1 | bolt<br>8 X 32 | | 1 | |
| 11 | 477 721 315 A | clutch pedal | | 1 | 924 |
| 11A | 477 721 315 D | clutch pedal | | 1 | TURBO,GT |
| 12 | 477 721 333 B | clutch cable | | 1 | 924 |
| 12A | 477 721 391 | retainer spring | | 1 | 924 |
| 13 | 477 721 399 A | support | | 1 | 924 |
| 14 | N 034 879 4 | hexagon-head bolt<br>M 12 X 22 | | 1 | 924 |
| 15 | N 010 476 3 | screw<br>M 12 X 75 | | 1 | 924 |

| Pos | Part Number | Name | Remarks | Qty | Model |
|---|---|---|---|---|---|
| 16 | N 011 531 7 | washer<br>13 | | 1 | 924 |
| 17 | N 012 042 4 | lock ring<br>B 12 | | 2 | 924 |
| 18 | N 011 030 4 | hexagon nut<br>M 12 | | 1 | 924 |
| 19 | 019 141 719 | clutch release lever | | 1 | 924 |
| 20 | N 040 262 2 | hexagon-head bolt<br>M 8 X 50 | | 1 | 924 |
| 21 | N 015 401 4 | washer<br>8,4 | | 2 | 924 |
| 22 | N 011 008 8 | hexagon nut<br>M 8 | | 1 | 924 |
| | | clutch control<br>hydraulic | | | TURBO, GT |
| 23 | 477 721 171 | clutch master cylinder<br>complete | | 1 | |
| 24 | 928 423 908 00 | bellows | | 1 | |
| 25 | 928 423 517 00 | clevis | | 1 | |
| 26 | 999 924 002 40 | bush | | 1 | |
| 27 | 900 025 008 09 | washer<br>A 10,5 | | 1 | |
| 28 | 999 166 034 02 | sl-lock | | 1 | |
| 29 | 928 423 191 00 | gasket | | 1 | |
| 30 | 900 027 015 02 | lock ring<br>B 8 | | 2 | |
| 31 | 900 076 025 02 | hexagon nut<br>M 8 | | 3 | |
| - | 999 181 021 50 | hose<br>12,5 X 7,5 | | * | |
| 32 | - | 220 MM | | 1 | |
| (33) | 477 721 189 A | clutch hose | | 1 | |
| 34 | 477 721 185 | clutch pipeline | | 1 | |
| 35 | 477 721 191 | support<br>clutch hose | | 1 | |
| 36 | 928 423 183 01 | hose holder | | 1 | |
| 37 | 477 721 195 | retaining bracket | | 1 | |
| 38 | 181 971 847 | cable clip | | 1 | |
| 39 | 999 924 001 40 | bush | | 1 | |
| 40 | N 011 525 13 | washer<br>A 8,4 | | 1 | |
| 41 | N 900 470 01 | lock washer | | 1 | |

- -- E N D -- -

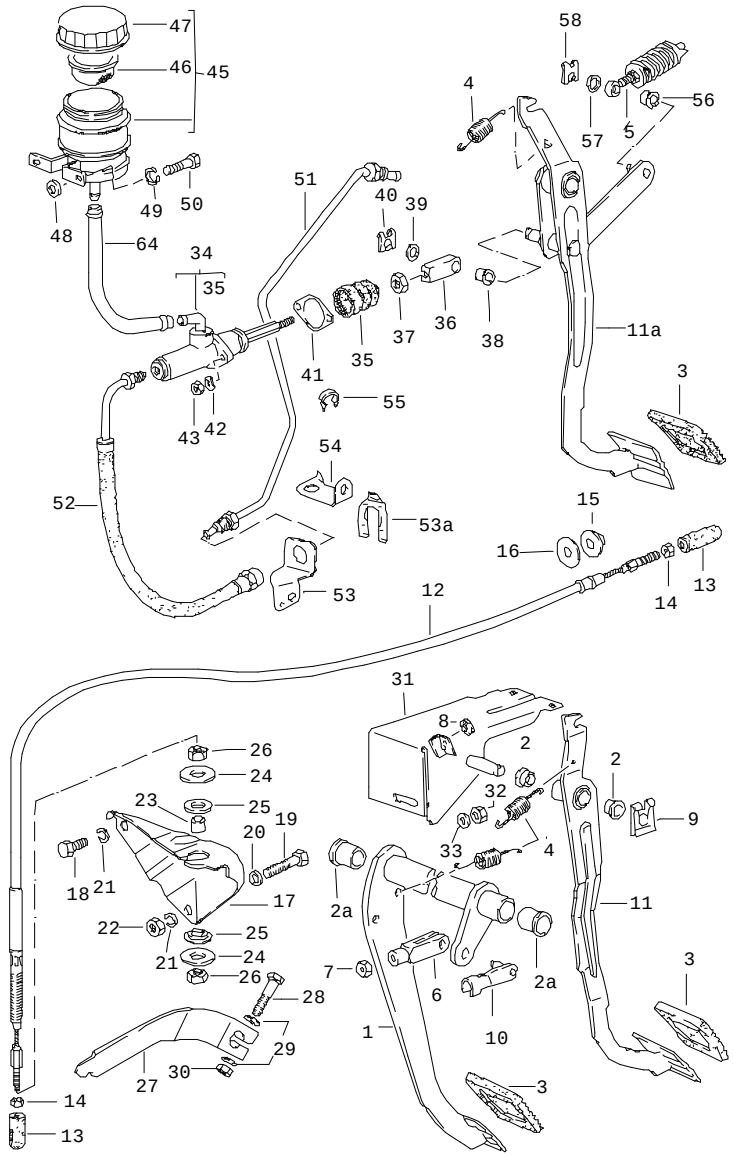


| Pos | Part Number | Name | Remarks | Qty | Model |
|---|---|---|---|---|---|
| | | brake<br>clutch<br>pedals<br>right-hand drive | | | |
| 1 | E 478 721 141 | brake pedal | | 1 | |
| (1) | 478 723 141 | brake pedal | | 1 | AUT. |
| 2 | 443 721 153 A | bearing sleeve | | 2 | 924 |
| 2A | 478 721 153 | bearing sleeve | | 2 | |
| 3 | 823 721 173 | cap | | 2 | |
| (3) | 827 723 173 | cap | | 1 | 924,AUT. |
| 4 | 321 721 191 | return spring | | 2 | |
| 5 | 477 721 353 A | clutch power spring | | 1 | TURBO,GT |
| 6 | 803 721 213 | clevis | | 1 | 924 |
| 7 | N 011 010 6 | hexagon nut<br>M 10 | | 1 | 924 |
| 8 | 999 703 183 40 | buffer | | 1 | |
| 9 | N 012 653 1 | lock | | 1 | |
| 10 | N 023 476 1 | bolt<br>8 X 32 | | 1 | |
| 11 | 478 721 315 | clutch pedal | | 1 | 924 |
| 11A | 478 721 315 A | clutch pedal | | 1 | TURBO,GT |
| 12 | 478 721 335 A | clutch cable | -81 | 1 | 924 |
| (12) | 478 721 333 B | clutch cable | 81- | 1 | 924 |
| 13 | E 803 721 339 | threaded eye | -81 | 2 | 924 |
| 14 | 900 076 010 02 | hexagon nut<br>M 6 | -81 | 2 | 924 |
| 15 | 803 721 393 | bush | -81 | 1 | 924 |
| 16 | 803 721 397 | washer<br>10,4 X 38 X 25 | -81 | 1 | 924 |
| 17 | 477 721 399 A | support | | 1 | 924 |

| Pos | Part Number | Name | Remarks | Qty | Model |
|---|---|---|---|---|---|
| 18 | N 034 879 4 | hexagon-head bolt<br>M 12 X 22 | | 1 | 924<br>924 |
| 19 | N 010 476 3 | screw<br>M 12 X 75 | | 1 | 924<br>924 |
| 20 | N 011 531 7 | washer<br>13 | | 1 | 924 |
| 21 | N 012 042 4 | lock ring<br>B 12 | | 2 | 924 |
| 22 | N 011 030 4 | hexagon nut<br>M 12 | | 1 | 924 |
| 23 | 803 721 341 | spacer tube | -81 | 1 | 924 |
| 24 | 803 721 369 | washer | -81 | 2 | 924 |
| 25 | 803 721 389 | bush | -81 | 2 | 924 |
| 26 | N 021 281 1 | lock nut<br>M 12 X 1 | -81 | 2 | 924 |
| 27 | 019 141 719 | clutch release lever | | 1 | 924 |
| 28 | N 040 262 2 | hexagon-head bolt<br>M 8 X 50 | | 1 | 924<br>924 |
| 29 | N 015 401 4 | washer<br>8,4 | | 2 | 924 |
| 30 | N 011 008 8 | hexagon nut<br>M 8 | | 1 | 924 |
| (31) | 478 721 113 A | bracket | | 1 | 924 |
| (31) A | 478 721 113 A | bracket | -80 | 1 | TURBO |
| (31) | 478 721 113 A | bracket | | 1 | TURBO,GT |
| 32 | 900 076 025 02 | hexagon nut<br>M 8 | | 3 | |
| 33 | N 012 229 3 | spring washer<br>A 8 | | 3 | |
| | | clutch control<br>hydraulic | | | TURBO, GT |
| 34 | 478 721 171 | clutch master cylinder | | 1 | |
| 35 | 928 423 908 00 | bellows | | 1 | |
| 36 | 478 721 179 | intermediate piece | | 1 | |
| 37 | N 011 118 14 | hexagon nut<br>BM 8 | | 1 | |
| 38 | 999 924 002 40 | bush | | 1 | |
| 39 | 900 025 008 09 | washer<br>A 10,5 | | 1 | |
| 40 | 999 166 034 02 | sl-lock | | 1 | |
| 41 | 928 423 191 00 | gasket | | 1 | |
| 42 | N 012 229 3 | spring washer<br>B 8 | | 2 | |
| 43 | 900 076 025 02 | hexagon nut<br>M 8 | | 2 | |
| 44 | 478 721 219 | connecting hose | | 1 | |
| 45 | 944 423 210 00 | expansion tank | | 1 | |
| 46 | 211 611 381 B | strainer | | 1 | |
| 47 | 477 611 361 | cover | | 1 | |
| 48 | 052 109 135 | spacer sleeve | | 2 | |
| 49 | N 012 226 5 | spring washer<br>B 6 | | 2 | |
| 50 | N 010 215 13 | hexagon-head bolt<br>M 6 X 15 | | 2 | |
| 51 | 478 721 185 B | clutch tube | | 1 | |
| 52 | 478 721 189 | clutch hose | | 1 | |
| 53 | 478 721 191 A | support<br>clutch hose | | 1 | |
| 53A | 928 423 183 01 | hose holder | | 1 | |
| 54 | E 478 721 195 A | retaining bracket<br>clutch tube | | 1 | |
| 55 | 181 971 847 | cable clip | | 1 | |
| 56 | 999 924 001 40 | bush | | 1 | |
| 57 | N 011 525 13 | washer<br>A 8,4 | | 1 | |

| Pos | Part Number | Name | Remarks | Qty | Model | Pos | Part Number | Name | Remarks | Qty | Model |
|---|---|---|---|---|---|---|---|---|---|---|---|
| 58 | N 900 470 01 | lock washer<br>6 | | 1 | | | | | | | |
| | | - -- E N D -- - | | | | | | | | | |

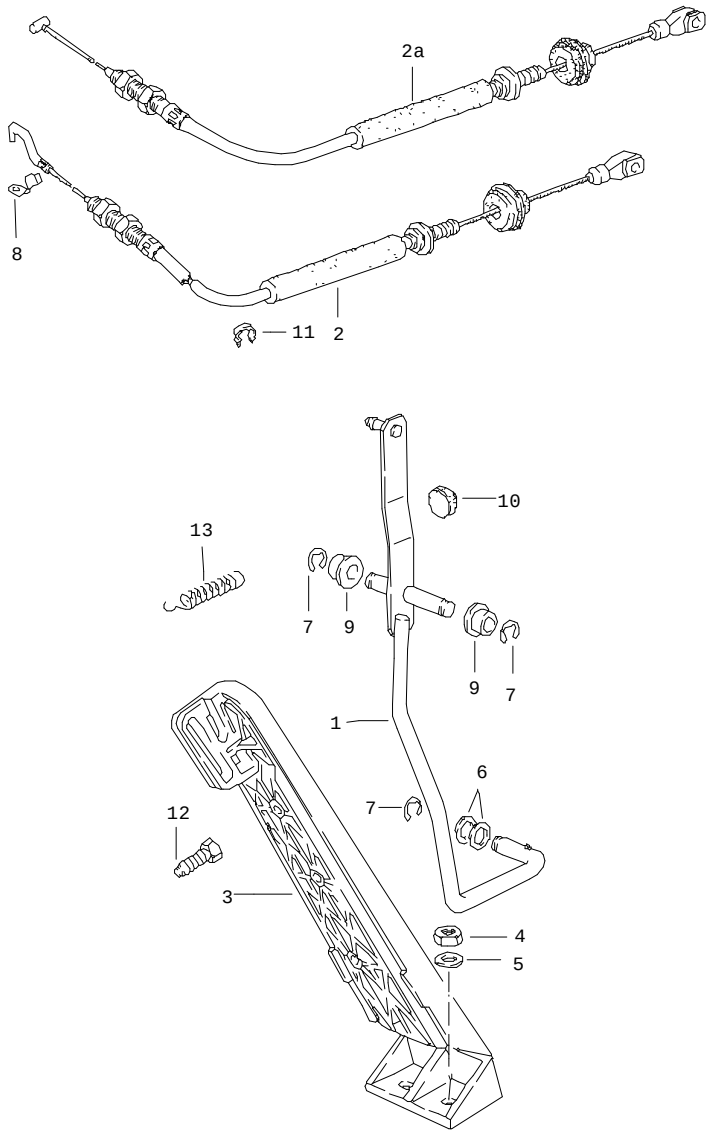


| Pos | Part Number | Name | Remarks | Qty | Model |
|---|---|---|---|---|---|
| | | accelerator control<br>accelerator cable<br>for<br>manual transmission | | | |
| 1 | 944 423 031 00 | accelerator control | /LL -81 | 1 | |
| (1) | 944 423 031 00 | accelerator control | /LL 82- | 1 | |
| (1) | 945 423 031 01 | accelerator control | /RL | 1 | |
| (1) | 945 423 031 01 | accelerator control | /RL | 1 | |
| 2 | 477 721 547 F | accelerator cable | /LL | 1 | 924 |
| (2) | 478 721 547 E | accelerator cable | /RL | 1 | 924 |
| (2) | 477 721 547 E | accelerator cable | /LL -80 | 1 | TURBO |
| (2) | E 478 721 547 D | accelerator cable | /RL -80 | 1 | TURBO |
| 2A | 477 721 551 | accelerator cable | /LL 81- | 1 | TURBO,GT |
| (2A) | 478 721 551 | accelerator cable | /RL 81- | 1 | TURBO,GT |
| 3 | 827 723 511 A | accelerator pedal | | 1 | |
| 4 | 900 076 010 02 | hexagon nut<br>M 6 | | 2 | |
| 5 | 803 817 121 | washer | | 2 | |
| 6 | 900 025 038 40 | washer | | 2 | |
| 7 | N 012 436 2 | lock washer | | 3 | |
| 8 | E 823 721 569 | retainer spring | | 1 | |
| 9 | 477 721 543 | bearing sleeve | | 2 | |
| 10 | 999 703 183 40 | buffer | | 1 | |
| 11 | 477 971 851 | cable clip | /RL | 1 | |
| 12 | 944 423 731 00 | adjusting screw | 82- | 1 | |
| 13 | 944 423 831 00 | spring | 82- | 1 | TURBO |
| | | - -- E N D -- - | | | |

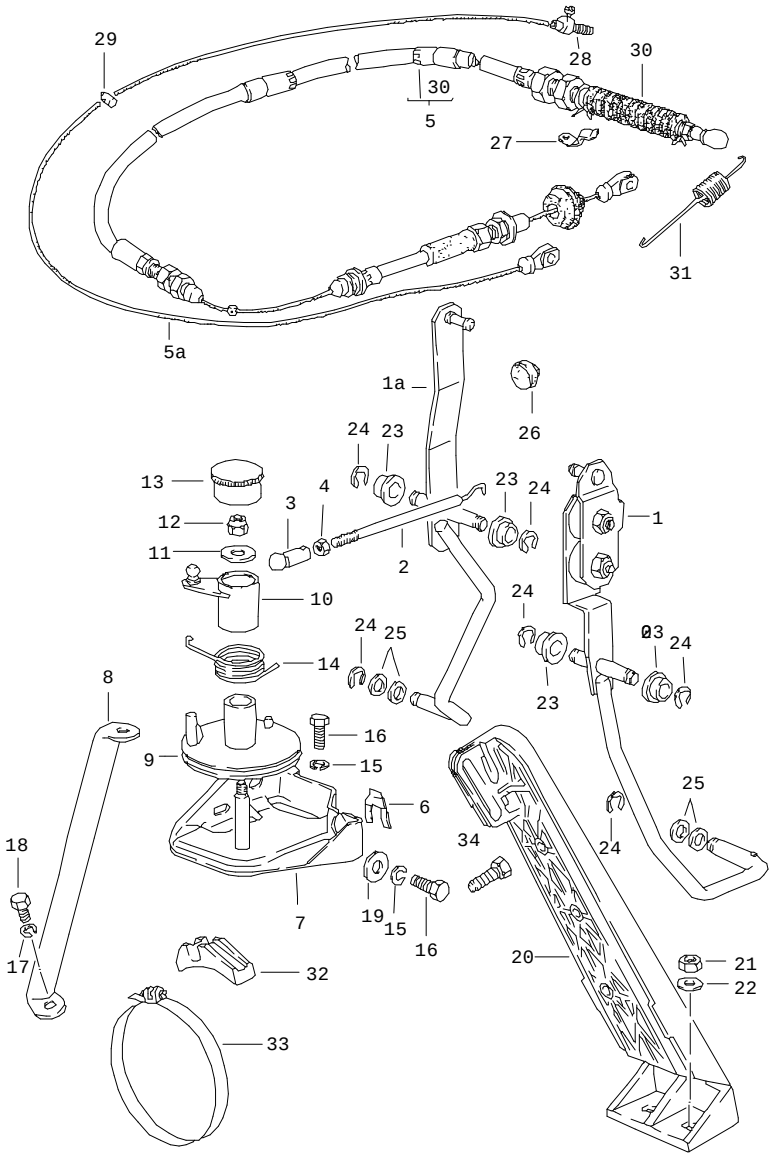


| Pos | Part Number | Name | Remarks | Qty | Model |
|---|---|---|---|---|---|
| | | accelerator control<br>accelerator cable<br>for<br>automatic transmission | | | |
| 1 | 944 423 033 00 | accelerator control | /LL -81 | 1 | |
| 1 | 944 423 033 00 | accelerator control | /LL 82- | 1 | |
| 1A | 945 423 031 01 | accelerator control | /RL | 1 | |
| 2 | 477 723 535 | throttle linkage | | 1 | |
| 3 | 911 423 147 00 | ball socket | | 1 | |
| 4 | N 011 005 14 | hexagon nut<br>M 5 | | 1 | |
| 5 | 477 723 575 A | accelerator cable<br>for<br>accelerator control<br>and<br>control pressure | /LL | 1 | |
| (5) | 478 723 575 A | accelerator cable<br>for<br>accelerator control<br>and<br>control pressure | /RL | 1 | |
| (5) | 478 723 575 A | cable<br>for<br>accelerator control<br>and<br>control pressure | /RL 83- | 1 | |
| 5A | 477 723 602 C | cable | /LL 82- | 1 | |
| 5A | 477 723 602 C | cable | /LL -81 | 1 | |
| (5A) | 478 723 602 B | cable | /RL | 1 | |
| 6 | N 012 323 1 | circlip | | 1 | |
| 7 | E 477 723 525 | support | | 1 | |
| 8 | 477 723 579 | bracket | | 1 | |
| 9 | 477 723 511 | deflection roller | | 1 | |
| 10 | 477 723 515 | accelerator control | | 1 | |
| 11 | 477 723 531 | washer | | 1 | |

| Pos | Part Number | Name | Remarks | Qty | Model | Pos | Part Number | Name | Remarks | Qty | Model |
|---|---|---|---|---|---|---|---|---|---|---|---|
| 12 | 900 910 012 02 | lock nut<br>M 6 | | 1 | | | | | | | |
| 13 | 999 659 045 40 | protection cap | | 1 | | | | | | | |
| 14 | 477 723 523 | spring | | 1 | | | | | | | |
| 15 | N 012 226 5 | spring washer<br>B 6 | | 3 | | | | | | | |
| 16 | N 010 215 13 | hexagon-head bolt<br>M 6 X 15 | | 3 | | | | | | | |
| 17 | N 012 228 3 | spring washer<br>B 8 | | 1 | | | | | | | |
| 18 | N 010 237 6 | hexagon-head bolt<br>M 8 X 12 | | 1 | | | | | | | |
| 19 | 900 151 006 09 | washer<br>B 6 | | 2 | | | | | | | |
| 20 | 827 723 511 A | accelerator pedal | | 1 | | | | | | | |
| 21 | 900 076 010 02 | hexagon nut<br>M 6 | | 2 | | | | | | | |
| 22 | 803 817 121 | washer | | 2 | | | | | | | |
| 23 | 477 721 543 | bearing sleeve | | 2 | | | | | | | |
| 24 | N 012 436 2 | lock washer | | 3 | | | | | | | |
| 25 | 900 025 038 40 | washer | | 2 | | | | | | | |
| 26 | 999 703 183 40 | buffer | | 1 | | | | | | | |
| 27 | E 823 721 569 | retainer spring | | 1 | | | | | | | |
| 28 | 477 723 601 | nipple | | 1 | | | | | | | |
| 29 | 477 723 611 | nipple | | 1 | | | | | | | |
| 30 | 311 713 269 A | bellows | | 1 | | | | | | | |
| 31 | 477 723 563 C | tension spring | | 1 | | | | | | | |
| 32 | 477 723 567 | support | | 4 | | | | | | | |
| 33 | 999 512 350 02 | hose clamp | | 4 | | | | | | | |
| 34 | 944 423 731 00 | adjusting screw | 82- | 1 | | | | | | | |
| | | - -- E N D -- - | | | | | | | | | |

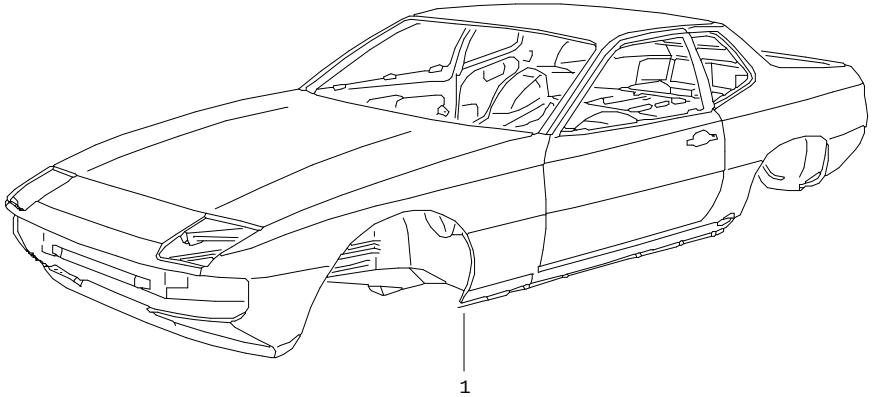


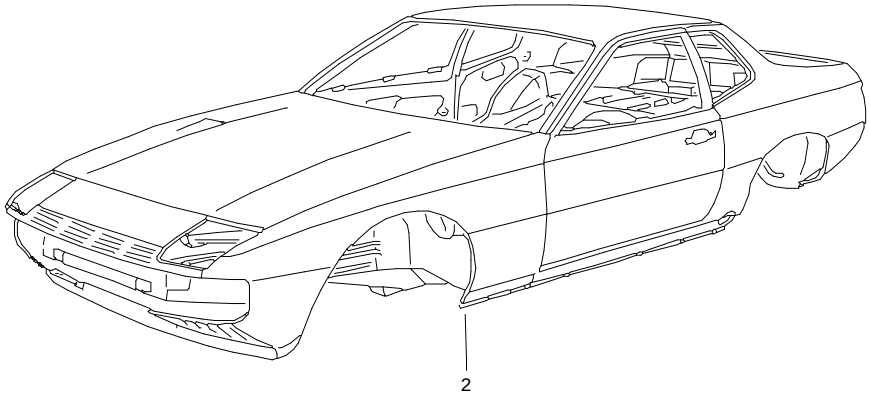


| Pos | Part Number | Name | Remarks | Qty | Model |
|---|---|---|---|---|---|
| | | body in white<br>prime coated<br>sealed<br>with<br>underbody protection<br>bodyshells can only<br>be delivered of the<br>current model year | | | |
| (1) | E 477 800 403 AL | body in white | /LL | 1 | 924 |
| (1) | E 477 800 403 AM | body in white | /LL | 1 | 924 M 650 |
| (1) | E 477 800 403 AN | body in white | /LL | 1 | TURBO |
| (1) | E 477 800 403 AQ | body in white | /LL | 1 | TURBO M 650 |
| (1) | E 478 800 403 Q | body in white | /RL | 1 | 924 |
| (1) | E 478 800 403 R | body in white | /RL | 1 | 924 M 650 |
| (1) | E 478 800 403 S | body in white | /RL | 1 | TURBO |
| (1) | E 478 800 403 T | body in white | /RL | 1 | TURBO M 650 |
| | | - -- E N D -- - | | | |

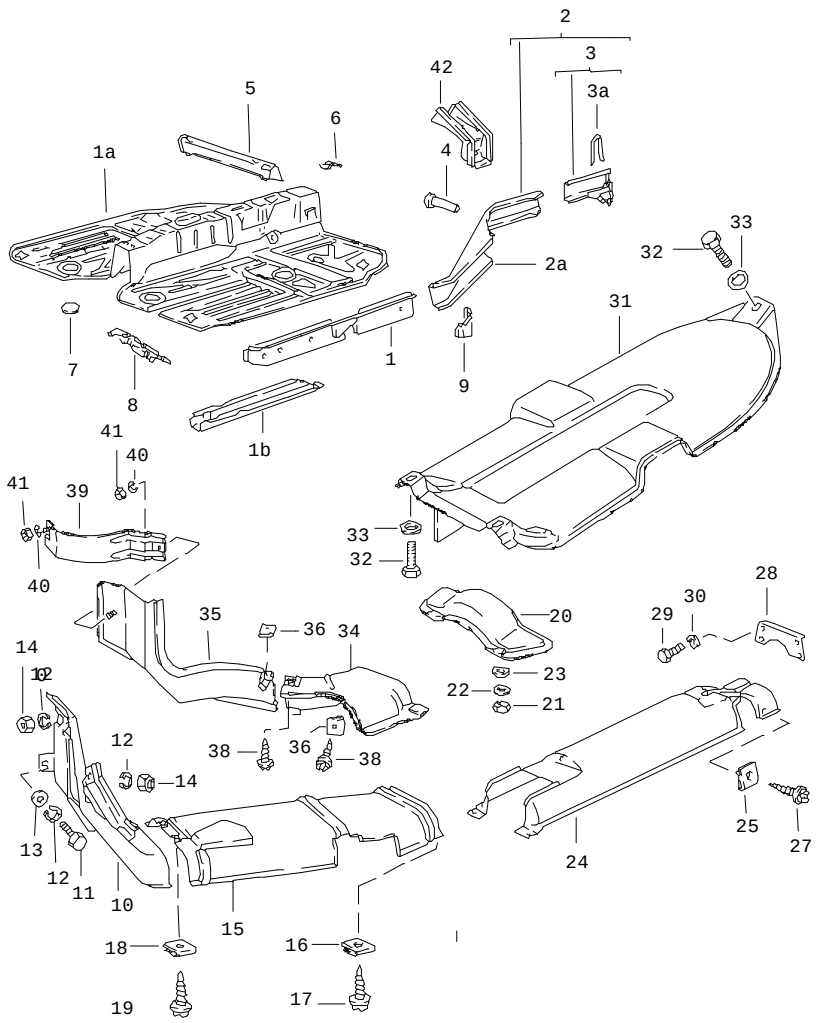


| Pos | Part Number | Name | Remarks | Qty | Model |
|---|---|---|---|---|---|
| | | side member<br>cover plate | | | |
| 1 | 477 803 103 | side member<br>centre<br>F >>92BN4 02267<br>F >>93BN1 00360 | /L | 1 | <br><br>924<br>TURBO |
| (1) | 477 803 103 A | side member<br>centre<br>F 92BN4 02268>><br>F 93BN1 00361>><br>F 93BN7 00001>> | /L | 1 | <br><br>924<br>TURBO<br>GT |
| (1) | 477 803 112 | side member<br>centre<br>F >>92BN4 02267<br>F >>93BN1 00360 | /LL/R | 1 | <br><br>924<br>TURBO |
| (1) | 478 803 104 | side member<br>centre<br>F >>92BN4 02267<br>F >>93BN1 00360 | /RL/R | 1 | <br><br>924<br>TURBO |
| (1) | 478 803 104 B | side member<br>centre<br>F 92BN4 02268>><br>F 93BN1 00361>><br>F 93BN7 00001>> | /R | 1 | <br><br>924<br>TURBO<br>GT |
| - | 999 703 119 40 | plug<br>side member | | X | |
| - | 803 803 583 | drain bush | | X | |
| - | 803 803 583 A | cap | | X | |
| 1A | 944 501 501 00 | floor section<br>centre | | 1 | |
| 1B | 477 803 283 | side member | | 2 | |
| 2 | 477 803 105 A | side member<br>use also:<br>477.803.145 | /L | 1 | |
| (2) | 477 803 106 A | side member<br>F >>92CN4 02197<br>F >>93CN1 00305<br><br>use also:<br>477.803.145 | /R | 1 | <br>924<br>TURBO |

| Pos | Part Number | Name | Remarks | Qty | Model |
|---|---|---|---|---|---|
| (2A) | 477 803 116 A | side member<br>F 92CN4 02198>>>>F 93CN1 00306>>>>use also:<br>477.803.145 | /R | 1 | |
| 3 | 477 803 125 A | end piece | /L | 1 | |
| (3) | 477 803 126 | end piece<br>F >>92CN4 02197<br>F >>93CN1 00305 | /R | 1 | 924<br>TURBO |
| (3) | 944 502 066 00 | end piece<br>F 92CN4 02198>>>>F 93CN1 00306>>>> | /R | 1 | 924<br>TURBO |
| 3A | 477 803 129 | retaining bow | | 2 | |
| 4 | 477 803 145 | bush<br>shock absorber<br>mounting | | 2 | |
| 5 | E 477 803 231 | cross member<br>for<br>front seat | /V<br><br>/L | 1 | |
| (5) | 477 803 232 | cross member<br>for<br>front seat | /V<br><br>/R | 1 | |
| 6 | 477 803 241 | bracket<br>for<br>front seat | /H | 4 | |
| 7 | 411 803 595 | cover<br>136 MM $ | | 2 | |
| 8 | 477 803 729 | foot support | /LL | 1 | |
| 9 | 477 803 871 A | jacking point | /L | 1 | |
| (9) | 477 803 872 A | jacking point | /R | 1 | |
| 10 | 477 809 214 A | cover plate | | 1 | 924 |
| 11 | 999 072 005 09 | hexagon-head bolt<br>M 6 X 12 | | 1 | 924 |
| 12 | N 012 006 4 | lock ring<br>B 6 | | 3 | 924 |
| 13 | N 011 524 7 | washer<br>A 6,4 | | 1 | 924 |
| 14 | 900 076 010 02 | hexagon nut<br>M 6 | | 2 | 924 |
| 15 | 477 803 387 B | cover plate | | 1 | 924 |
| 16 | 999 591 485 02 | speed nut<br>BG 4,8 | | 2 | 924 |
| 17 | N 090 239 1 | screw<br>B 4,8 X 13 | | 2 | 924 |
| 18 | 999 591 485 02 | speed nut<br>BG 4,8 | | 2 | 924 |
| 19 | N 090 239 1 | screw<br>B 4,8 X 13 | | 2 | 924 |
| 20 | 477 803 253 | strut | | 1 | |
| 21 | N 011 008 8 | hexagon nut<br>M 8 | | 4 | |
| 22 | N 011 525 13 | washer<br>A 8,4 | | 4 | |
| 23 | 900 027 015 02 | lock ring<br>B 8 | | 4 | |
| 28 | 477 803 291 | strut | | 2 | |
| 29 | N 010 237 6 | hexagon-head bolt<br>M 8 X 12 | | 8 | |
| 30 | N 012 229 3 | spring washer<br>A 8 | | 8 | |
| 31 | 944 503 139 00 | cover plate<br>oval<br>F >>92CN4 02197<br>F >>93CN1 00305 | | 1 | 924, TURBO<br><br>924<br>TURBO |
| (31) | 944 503 139 00 | cover plate<br>F 92CN4 02198>>>>F 93CN1 00306>>>> | | 1 | 924<br>TURBO |
| (31) | 944 503 139 00 | cover plate | | 1 | GT |
| 32 | 999 072 005 09 | hexagon-head bolt<br>M 6 X 12 | | 3 | |
| 33 | 900 151 029 02 | washer<br>6,4 | | 3 | |
| 34 | 477 803 393 | cover plate | | 1 | TURBO |

| Pos | Part Number | Name | Remarks | Qty | Model |
|---|---|---|---|---|---|
| 35 | 477 803 394 | cover plate | | 1 | TURBO |
| 36 | 999 591 485 02 | speed nut<br>BG 4,8 | | 2 | TURBO |
| 38 | N 090 239 1 | screw<br>B 4,8 X 13 | | 2 | TURBO |
| 39 | 477 809 497 | cover plate | | 1 | TURBO |
| 40 | N 012 026 3 | lock ring<br>6 | | 2 | TURBO |
| 41 | 900 076 010 02 | hexagon nut<br>M 6 | | 2 | TURBO |
| 42 | 944 201 045 00 | cover<br>F 92CN4 02198>>\<br>F 93CN1 00306>>\ | | 1 | 924<br>TURBO |
| - | 477 863 671 B | heat insulation | /H | 1 | TURBO |
| | | - -- E N D -- - | | | |

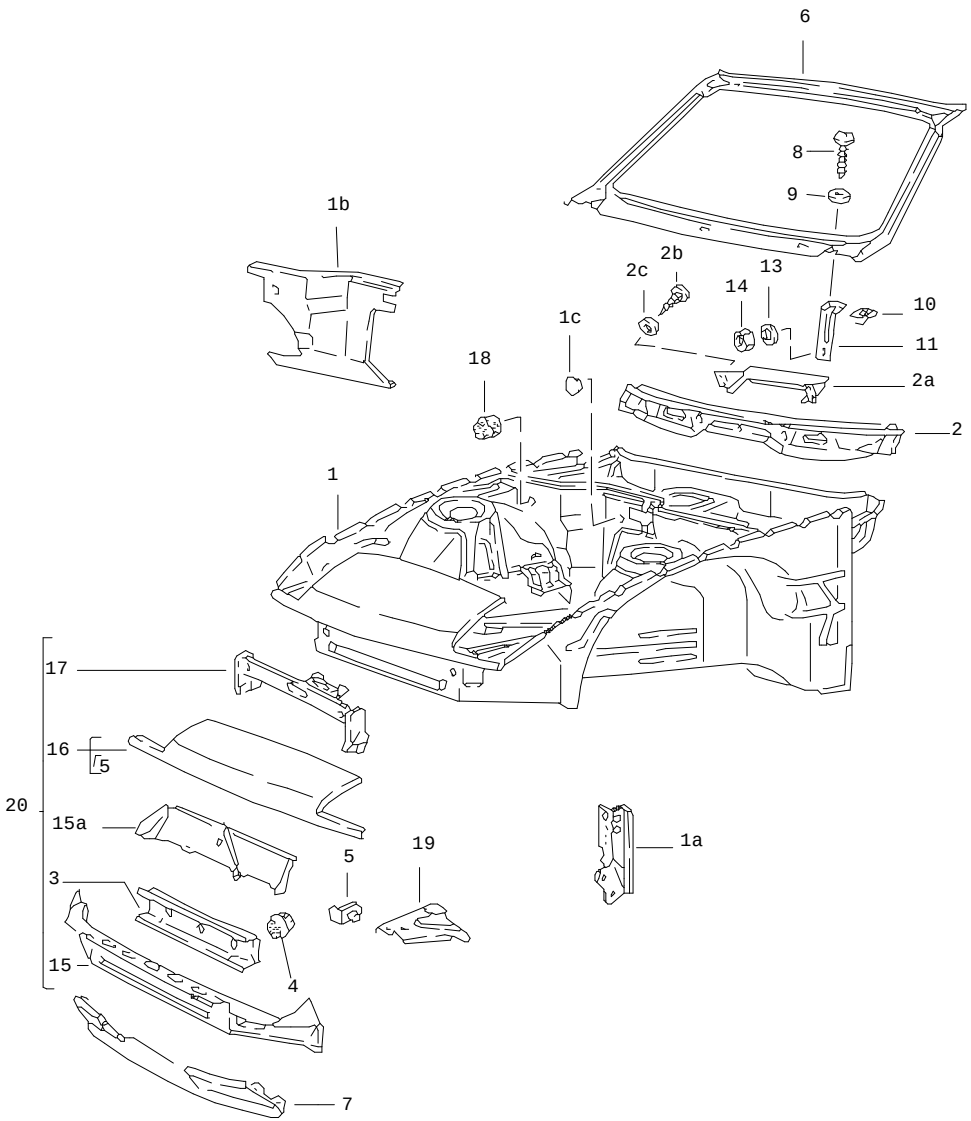


| Pos | Part Number | Name | Remarks | Qty | Model |
|---|---|---|---|---|---|
| | | front part | | | |
| (1) | 477 805 021 AS | body front section<br>F >>92CN4 02197<br><br>without<br>carbon canister<br>use also:<br>plug<br>999 703 103 40 | /LL | 1<br><br><br><br><br>2 | 924 |
| (1) | 477 805 021 BJ | body front section<br>F 92CN4 02198>> | /LL -83 | 1 | 924 |
| (1) | 477 805 021 BM | body front section<br>F 92CN4 02198>><br><br>use also:<br>plug<br>999 703 103 40 | /LL -83 | 1<br><br><br>2 | 924 M 573 |
| (1) | E 477 805 021 BQ | body front section | /LL 84- | 1 | 924 M 573 |
| (1) | 477 805 021 AB | body front section<br>without<br>carbon canister<br>use also:<br>plug<br>999.703.103.40 | /LL -80 | 1<br><br><br><br>2 | TURBO |
| (1) | 477 805 021 AT | body front section<br>F >>93CN1 00305<br><br>without<br>carbon canister<br>use also:<br>plug<br>999 703 103 40 | /LL 81- | 1<br><br><br><br><br>2 | TURBO |
| (1) | 477 805 021 BK | body front section<br>F 93CN1 50332>> | /LL -83 | 1 | TURBO |
| (1) | 477 805 021 BN | body front section<br>F 93CN1 00306>><br><br>use also:<br>2<br>plug<br>999 703 103 40 | /LL -83 | 1 | TURBO M 573 |
| (1) | E 477 805 021 BP | body front section | /LL 84- | 1 | TURBO M 573 |
| (1) | 937 502 021 01 | body front section | /LL | 1 | GT |

| Pos | Part Number | Name | Remarks | Qty | Model |
|---|---|---|---|---|---|
| (1) | 478 805 021 M | body front section<br>without<br>carbon canister<br>use also:<br>plug<br>999.703.103.40 | /RL -80 | 1<br><br><br><br>2 | 924 |
| (1) | 478 805 021 AQ | body front section<br>F >>92CN4 02197<br><br>without<br>carbon canister<br>use also:<br>plug<br>999 703 103 40 | /RL 81- | 1<br><br><br><br><br><br>2 | 924 |
| (1) | 478 805 021 BH | body front section<br>F 92CN4 02198>><br><br>without<br>carbon canister<br>use also:<br>plug<br>999 703 103 40 | /RL -83 | 1<br><br><br><br><br><br>2 | 924 |
| (1) | E 478 805 021 BK | body front section | /RL 84- | 1 | 924 M 573 |
| (1) | 478 805 021 AR | body front section<br>F >>93CN1 00305<br><br>without<br>carbon canister<br>use also:<br>plug<br>999 703 103 40 | /RL | 1<br><br><br><br><br><br>2 | TURBO |
| (1) | E 478 805 021 BJ | body front section<br>F 93CN1 00306>><br><br>without<br>carbon canister<br>use also:<br>plug<br>999 703 103 40 | /RL | 1<br><br><br><br><br><br>2 | TURBO |
| (1) | 938 502 021 01 | body front section<br>without<br>carbon canister<br>use also:<br>plug<br>999 703 103 40 | /RL | 1<br><br><br><br><br><br>2 | GT |
| (1A) | 477 805 057 A | reinforcement | | 1 | |

| Pos | Part Number | Name | Remarks | Qty | Model |
|---|---|---|---|---|---|
| (1A) | 477 805 058 A | reinforcement | | 1 | |
| (1B) | 477 805 433 | firewall | /L -80 | 1 | |
| (1B) | 944 502 201 00 | firewall | /L | 1 | |
| (1B) | 944 502 202 00 | firewall | /R | 1 | |
| 1A | 111 971 911 A | rubber sleeve<br>F 92CN4 02198>><br>F 93CN1 00306>> | | 1 | <br>924<br>TURBO |
| 2 | 944 502 079 00 | cross member<br>F >>92CN4 02197<br>F >>93CN1 00305 | /LL | 1 | <br>924<br>TURBO |
| (2) | 944 502 079 00 | cross member<br>F 92CN4 02198>><br>F 93CN1 00306>> | /LL | 1 | <br>924<br>TURBO |
| (2) | 945 502 079 00 | cross member<br>F >>92CN4 02197<br>F >>93CN1 00305 | /RL | 1 | <br>924<br>TURBO |
| (2) | 945 502 079 00 | cross member<br>F 92CN4 02198>><br>F 93CN1 00306>> | /RL | 1 | <br>924<br>TURBO |
| 2A | 944 572 377 00 | bracket<br>for<br>heating<br>F 92CN4 02198>><br>F 93CN1 00306>> | | 1 | <br><br><br>924<br>TURBO |
| 2B | N 013 883 3 | tapping screw<br>B 4,8 X 9,5<br>F 92CN4 02198>><br>F 93CN1 00306>> | | 4 | <br><br>924<br>TURBO |
| 2C | N 011 523 9 | washer<br>A 5,3 X 10 | | 4 | |
| 3 | 944 502 077 00 | cross member | | 1 | |
| (3) | 937 501 043 00 | cross member | /V | 1 | GT |
| 4 | 803 803 583 | drain bush | | 3 | |
| 5 | E 477 805 567 | bracket | /L | 1 | |
| (5) | 477 805 568 | bracket | /R | 1 | |
| 6 | 477 805 571 A | windscreen frame | | 1 | |

| Pos | Part Number | Name | Remarks | Qty | Model |
|---|---|---|---|---|---|
| (7) | 944 503 035 01 | spoiler | | 1 | 924 |
| (7) | 944 503 035 00 | spoiler | | 1 | TURBO |
| 8 | 900 143 046 07 | tapping screw<br>B 4,8 X 16 | | 4 | |
| 9 | 900 025 003 02 | washer<br>A 5,3 | | 4 | |
| 10 | N 015 458 1 | speed nut<br>4,8 X 14,8 | | 4 | |
| 11 | 477 805 592 | cowl panel support | | 2 | |
| 13 | N 011 612 3 | washer<br>R 7 | | 2 | |
| 14 | 900 910 012 02 | lock nut<br>M 6 | | 2 | |
| (15) | 944 503 043 00 | end plate<br>lower | | 1 | |
| (15) | 937 503 135 00 | end plate<br>lower | | 1 | GT |
| (15A) | 944 502 061 00 | air duct | | 1 | |
| 16 | 477 805 593 | end plate<br>upper | | 1 | 924 |
| (16) | E 477 805 593 A | end plate<br>upper | | 1 | TURBO, GT |
| (17) | 944 501 933 01 | lock carrier | | 1 | 924,TURBO,GT |
| - | 928 025 283 02 | rubber seal<br>for<br>lock carrier<br>580 MM | | *<br><br><br>1 | GT<br><br><br>GT |
| 18 | 477 805 667 | water drain valve | | 2 | |
| 19 | 477 805 699 | corner plate | /L | 1 | |
| (19) | 477 805 699 A | corner plate | /L | 1 | M 573 |
| - | 477 805 693 | support<br>for<br>horn | | 1 | |
| 20 | 477 805 591 | terminal piece<br>complete | | 1 | 924 |

- -- E N D -- -

| Model | Year | MG | SG | Illustration | Restrictions | Update | 10:09 | 16.08.2004 | PORSCHE | PET | PORSCHE |
|---|---|---|---|---|---|---|---|---|---|---|---|
| 924 | 85 | 8 | 01 | 801-15 | | 179 | | | | | |

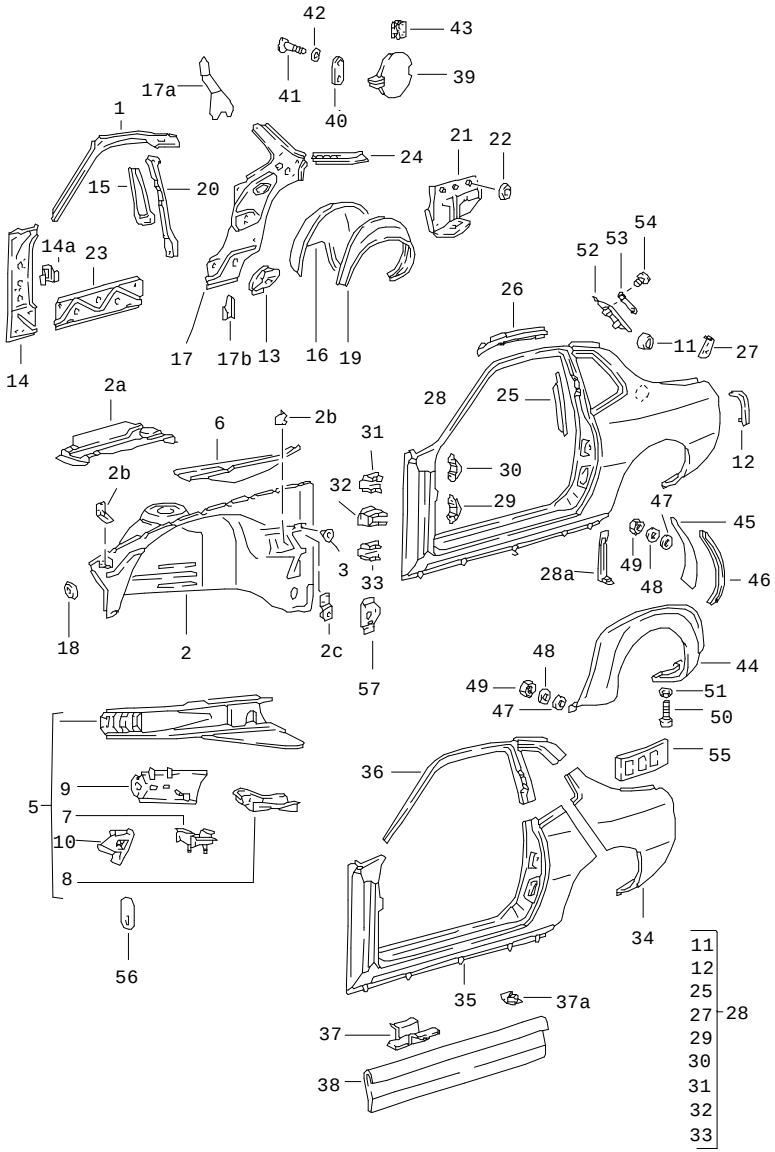


| Pos | Part Number | Name | Remarks | Qty | Model |
|---|---|---|---|---|---|
| | | side section | | | |
| 1 | 477 809 037 | separator | /L | 1 | |
| (1) | 477 809 037 | separator | /L | 1 | M650 |
| (1) | 477 809 038 | separator | /R | 1 | |
| (1) A | 477 809 038 | separator | /R | 1 | M650 |
| - | 311 881 945 A | plug | | 3 | |
| (2) | 477 809 103 D | wheel housing<br>without<br>carbon canister<br>use also:<br>plug<br>999 703 103 40<br>mounting<br>944 502 071 00 | /L<br><br><br><br><br><br>84- | 1<br><br><br><br>2 | |
| (2) | 477 809 107 D | wheel housing | /L | 1 | |
| (2) | 477 809 104 D | wheel housing<br>use also:<br>478 809 446 | /R<br>/RL | 1 | |
| (2) | 477 809 108 C | wheel housing | /R | 1 | |
| - | 999 703 103 40 | plug | | 2 | |
| - | 477 809 374 | support<br>fuel filter | 81- | 1 | 924 |
| - | 477 809 484 | bearing bracket<br>engine mounting | /R | 1 | TURBO |
| - | 477 863 557 | heat protection | /R | 1 | TURBO |
| - | 478 809 446 | bearing bracket<br>throttle linkage | /RL | 1 | |
| (2A) | 477 809 867 B | bracket | -80 | 1 | |
| 2A | 477 809 867 B | bracket | 81-82 | 1 | |
| (2A) | 477 809 867 C | bracket | 83- | 1 | |
| 2B | 937 501 141 00 | bracket | | 4 | GT |
| 2C E | 937 501 117 00 | support for antenna | /L | 1 | GT |
| 3 | N 020 025 1 | plug | | X | |

| Pos | Part Number | Name | Remarks | Qty | Model |
|---|---|---|---|---|---|
| 3 | 999 703 179 40 | plug | | X | |
| (5) | 477 809 111 Q | side member<br>F >>92CN4 02197<br>F >>93CN1 00305 | /L | 1 | 924<br>TURBO |
| (5) | 477 809 111 R | side member<br>F 92CN4 02198>><br>F 93CN1 00306>> | /L | 1 | 924<br>TURBO |
| (5) | 477 809 112 Q | side member<br>F >>92CN4 02197<br>F >>93CN1 00305 | /R | 1 | 924<br>TURBO |
| (5) | 477 809 112 R | side member<br>F 92CN4 02198>><br>F 93CN1 00306>> | /R | 1 | 924<br>TURBO |
| 6 | 477 809 119 | side member<br>upper left | /LL | 1 | 924 |
| (6) | 945 502 119 02 | side member<br>upper left | /RL | 1 | |
| (6) | 477 809 119 A | side member<br>upper left | /LL | 1 | TURBO,GT |
| (6) | 477 809 120 | side member<br>upper right | /LL | 1 | |
| (6) | 478 809 120 | side member<br>upper right | /RL | 1 | 924 |
| (6) | 478 809 120 A | side member<br>upper right | /RL | 1 | TURBO,GT |
| 7 | 477 809 151 | bearing bracket | | 2 | |
| 8 | 951 501 165 00 | end plate | /L | 1 | |
| (8) | 951 501 166 00 | end plate | /R | 1 | |
| (9) | 944 501 081 00 | filler plate<br>side member | /L | 1 | |
| (9) | 944 501 082 00 | filler plate<br>side member | /R | 1 | |
| 10 | 477 809 221 A | separator | /L | 1 | 924,TURBO |
| (10) | 937 501 145 00 | separator | /L | 1 | GT |
| (10) | 477 809 268 B | separator | /R | 1 | 924,TURBO |
| (10) | 937 502 268 00 | separator | /R | 1 | GT |
| - | 477 809 525 | towing lug | /R | 1 | 924,TURBO |
| - | E 937 501 525 00 | towing lug | /R | 1 | GT |
| 11 | 477 809 040 | retainer<br>tank filler neck | | 1 | |
| 12 | 477 809 375 A | bracket for light | /L | 1 | |
| (12) | 477 809 376 A | bracket for light | /R | 1 | |
| 13 | 477 809 387 A | corner plate | /L | 1 | 924,TURBO |
| (13) | 937 502 387 01 | corner plate | /L | 1 | GT |
| (13) | 477 809 388 A | corner plate | /R | 1 | 924,TURBO |
| (13) | 937 502 388 01 | corner plate | /R | 1 | GT |
| 14 | 477 809 393 A | hinge pillar<br>inner<br>use also:<br>POS. 14A | /L<br><br>/LL 84- | 1 | |
| (14) | 477 809 394 A | hinge pillar<br>use also:<br>POS. 14A | /R<br>/RL 84- | 1 | |
| 14A | 944 502 373 00 | mounting<br>switch<br>rear lid unlocking device | 84- | 1 | |
| 15 | 477 809 397 | centre pillar<br>inner | /L | 1 | |
| (15) | 477 809 398 | centre pillar | /R | 1 | |
| 16 | 477 809 403 F | wheel housing<br>inner | /L | 1 | |
| (16) | 477 809 404 H | wheel housing<br>F >>92CN4 02197<br>F >>93CN1 00305 | /R | 1 | 924<br>TURBO |
| (16) | 944 501 043 00 | wheel housing<br>inner | | 1 | |
| (16) | 944 501 044 00 | wheel housing<br>F 92CN4 02198>><br>F 93CN1 00306>> | /R | 1 | 924<br>TURBO |

| Pos | Part Number | Name | Remarks | Qty | Model |
|---|---|---|---|---|---|
| 17 | 944 502 901 00 | side section<br>inner<br>use also:<br>937.502.393.00 | /L -83 | 1<br><br><br>1 | <br><br>GT |
| 17 | 944 502 901 01 | side section<br>inner | /L 84- | 1 | |
| (17) | 944 502 902 00 | side section<br>inner<br>with<br>expansion tank<br>use also:<br>937.502.394.00 | /R -83 | 1<br><br><br><br><br>1 | <br><br><br><br>GT |
| (17) | 944 502 902 01 | side section<br>inner | /R 84- | 1 | |
| 17B | 937 502 393 00 | support<br>flared wheel arches | /L | 1 | GT |
| (17B) | 937 502 394 00 | support<br>flared wheel arches | /R | 1 | GT |
| 18 | 803 803 583 A | cover | | 8 | |
| 19 | 477 809 411 B | wheel housing | /L | 1 | 924,TURBO |
| (19) | 937 502 411 00 | wheel housing | /L | 1 | GT |
| (19) | 477 809 412 B | wheel housing | /R | 1 | 924,TURBO |
| (19) | 937 502 412 00 | wheel housing | /R | 1 | GT |
| 20 | 944 502 049 00 | reinforcement | /L | 1 | |
| (20) | 944 502 050 00 | reinforcement | /R | 1 | |
| 21 | 477 809 421 A | side section<br>inner<br>use also:<br>937.502.381.00 | /L | 1<br><br><br>2 | <br><br>GT |
| (21) | 477 809 422 A | side section<br>use also:<br>937.502.381.00 | /R | 1<br><br>2 | <br>GT |
| - | 937 502 381 00 | bracket<br>flared wheel arches | | 4 | GT |
| 22 | 803 803 583 | drain bush | | X | |
| (22) | 021 119 569 | rubber sleeve | | X | M 650 |
| 23 | 477 809 433 | separator<br>lower | | 2 | |
| 24 | 944 502 439 00 | reinforcement | | 1 | |
| (24) | 477 809 440 | reinforcement | | 1 | |
| 25 | 477 809 445 | reinforcement | /L | 1 | |
| (25) | 477 809 446 | reinforcement | /R | 1 | |
| 26 | 477 809 585 | filler plate | | 1 | |
| (26) | 477 809 586 | filler plate | | 1 | |
| 27 | 477 809 617 | retaining bracket | /L | 1 | |
| (27) | 477 809 618 | retaining bracket | /R | 1 | |
| 28 | 477 809 601 AA | side section<br>outer<br>see workshop manual | /L | 1 | 924 |
| (28) | 477 809 601 AC | side section<br>outer<br>see workshop manual | /L | 1 | TURBO |
| (28) | 937 503 065 00 | side section<br>outer<br>use also:<br>937.502.395.00 | /L | 1<br><br><br>1 | GT |
| (28) | 477 809 602 BE | side section<br>outer<br>see workshop manual | /R | 1 | 924 |
| (28) | 477 809 602 BE | side section<br>outer<br>see workshop manual | /R | 1 | TURBO |
| (28) | 937 503 066 00 | side section<br>outer<br>use also:<br>937.502.395.00 | /R | 1<br><br><br>1 | GT |
| 28A | 937 502 395 00 | bracket<br>flared wheel arches | | 2 | GT |
| (28) | 937 503 605 00 | side section<br>outer | /L | 1 | GT |
| (28) | 937 503 606 00 | side section | /R | 1 | GT |
| 29 | 477 809 619 | mounting plate | /L | 1 | |

| Pos | Part Number | Name | Remarks | Qty | Model |
|---|---|---|---|---|---|
| (29) | 477 809 620 | mounting plate | /R | 1 | |
| 30 | 477 809 653 | mounting plate | | 2 | |
| 31 | 477 809 655 | hinge reinforcement<br>upper | | 2 | |
| 32 | 477 809 625 | reinforcement | | 2 | |
| 33 | 477 809 621 | hinge reinforcement<br>lower | /L | 1 | |
| (33) | 477 809 622 | hinge reinforcement<br>lower | /R | 1 | |
| 34 | E 477 809 843 F | sub-part<br>wing | /L | 1 | 924,TURBO |
| (34) | 477 809 844 F | sub-part<br>wing | /R | 1 | 924,TURBO |
| 35 | 477 809 847 B | side member section | /L | 1 | 924,TURBO |
| (35) | 477 809 848 B | side member section | /R | 1 | 924,TURBO |
| 36 | 477 809 849 A | sub-part<br>roof pillar<br>F >>92CN4 02197<br>F >>93CN1 00305 | /L | 1 | 924,TURBO<br><br>924<br>TURBO |
| 36 | 477 809 849 A | sub-part<br>roof pillar<br>F 92CN4 02198>><br>F 93CN1 00306>> | /L | 1 | 924,TURBO<br><br>924<br>TURBO |
| (36) | 477 809 850 A | sub-part<br>roof pillar | /R | 1 | 924,TURBO |
| 37 | 477 809 471 | support | | 10 | TURBO |
| 37 | 477 809 471 | support | | 10 | 924 M 603 |
| 37A | 937 503 059 00 | angle | | 8 | GT |
| 38 | 477 809 685 | attachment strip | /L | 1 | TURBO |
| (38) | 477 809 686 | attachment strip | /R | 1 | TURBO |
| 38 | 477 809 685 | attachment strip | /L | 1 | 924 M 603 |
| (38) | 477 809 686 | attachment strip | /R | 1 | 924 M 603 |
| (38) | 937 503 511 00 | attachment strip | | 2 | GT |

| Pos | Part Number | Name | Remarks | Qty | Model |
|---|---|---|---|---|---|
| 39 | 477 853 095 A | flap | | 1 | |
| 40 | 477 853 403 | desk pad | | X | |
| 41 | 900 146 003 02 | oval-head screw<br>M 5 X 11 | | 2 | |
| 42 | N 012 222 4 | spring washer<br>B 5 | | 2 | |
| 43 | E 477 853 401 | stop<br>rubber | -82 | 1 | |
| (43) | 931 504 397 00 | stop<br>rubber | 83- | 1 | |
| 44 | E 937 503 031 02 | flared wheel arches | /L | 1 | GT |
| (44) | 937 503 032 02 | flared wheel arches | /R | 1 | GT |
| - | 937 559 161 01 | piping<br>flared wheel arches | /L | 1 | GT |
| | M3A | guards red | | | |
| | 041 | black | | | |
| | 97A | silver | | | |
| - | 937 559 162 01 | piping<br>flared wheel arches | /R | 1 | GT |
| | M3A | guards red | | | |
| | 041 | black | | | |
| | 97A | silver | | | |
| 45 | 937 503 233 02 | bulkhead | /L | 1 | GT |
| (45) | 937 503 234 02 | bulkhead | /R | 1 | GT |
| 46 | 928 025 283 02 | rubber seal<br>566 MM | | *<br>2 | GT |
| 47 | 211 853 611 | sealing washer | | 26 | GT |
| 48 | 900 151 003 02 | washer<br>A 6,4 | | 30 | GT |
| 49 | N 011 183 9 | hexagon nut<br>M 6 | | 32 | GT |

| Pos | Part Number | Name | Remarks | Qty | Model |
|---|---|---|---|---|---|
| 50 | 900 067 185 07 | pan-head screw<br>M 6 X 12 | | 6 | GT |
| 51 | 937 503 255 00 | spacer | | 6 | GT |
| 52 | E 477 809 097 | reinforcement | /L | 1 | |
| (52) | E 477 809 098 | reinforcement | /R | 1 | |
| 53 | 928 504 355 02 | gasket | | 4 | |
| 54 | 999 015 005 07 | half-round screw | | 4 | |
| 55 | 944 555 275 00 | filler piece | /L | 1 | |
| (55) | 944 555 276 00 | filler piece | /R | 1 | |
| 56 | 477 809 035 | support<br>water reservoir | | 1 | |
| 57 | 944 502 071 00 | mounting | 84- | 1 | |
| | | - -- E N D -- - | | | |

| Pos | Part Number | Name | Remarks | Qty | Model |
|---|---|---|---|---|---|

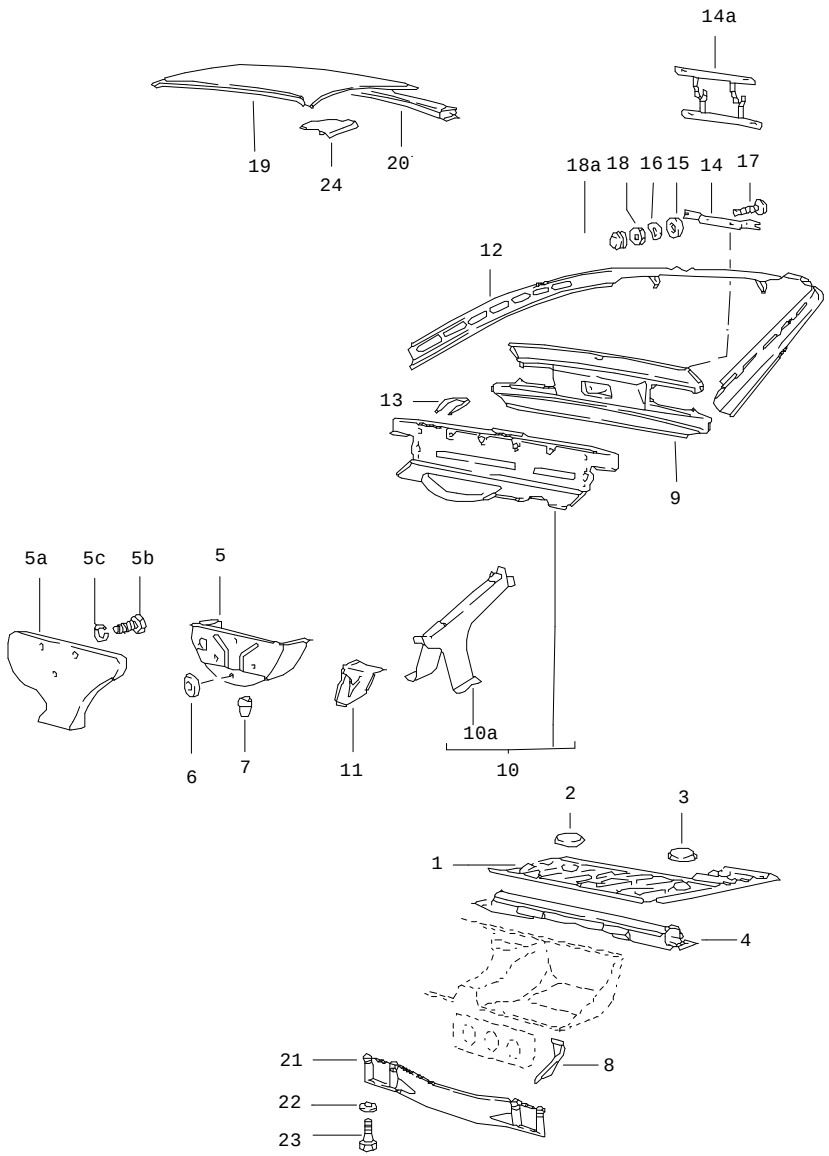


| Pos | Part Number | Name | Remarks | Qty | Model |
|---|---|---|---|---|---|
| | | transmission carrier<br>boot floor plate<br>roof | | | |
| 1 | 944 501 075 00 | boot floor plate | | 1 | |
| 2 | 477 803 581 | cover | | 1 | |
| 3 | 411 803 595 | cover<br>136 MM $ | | 1 | |
| 4 | 477 813 115 C | transmission carrier | | 1 | |
| 5 | 477 813 131 | spare-wheel well | /V | 1 | |
| 6 | 803 803 583 | drain bush | | 3 | |
| 7 | 111 701 309 | rubber sleeve | | 1 | |
| 8 | 477 813 145 B | corner panel | /L | 1 | |
| (8) | 477 813 146 B | corner panel | /R | 1 | |
| 9 | 944 503 037 01 | end plate | -84 | 1 | |
| 9 | 944 503 037 01 | end plate | 85- | 1 | |
| - | 477 813 345 A | reinforcement | /L -84 | 1 | |
| - | 944 502 345 01 | reinforcement | /L 85- | 1 | |
| - | 944 502 346 01 | reinforcement | /R | 1 | |
| (9) | 944 503 901 01 | end plate | | 1 | |
| - | 999 703 179 40 | plug<br>F 92CN4 02198>><br>F 93CN1 00306>> | | 1 | |
| (10) | 944 503 901 00 | end plate<br>lower | /H | 1 | GT |
| - | 477 813 169 | angle<br>jack | /L | 1 | |
| - | 477 813 170 | angle<br>jack | /R | 1 | |
| - | 477 813 165 | support | | 1 | |
| 10A | 477 813 393 A | support<br>exhaust system<br>F >>92CN4 02197<br>F >>93CN1 00305 | | 1 | 924,TURBO<br><br>924<br>TURBO |

| Pos | Part Number | Name | Remarks | Qty | Model |
|---|---|---|---|---|---|
| (10A) | 944 502 091 00 | support<br>exhaust system | | 1 | GT |
| (10A) | 944 502 091 00 | support<br>exhaust system<br>F 92CN4 02198>><br>F 93CN1 00306>> | | 1 | 924<br>TURBO |
| 11 | 477 813 309 | corner panel | /L | 1 | |
| (11) | 944 502 210 00 | corner panel | /R | 1 | |
| 12 | A 944 502 035 02 | lock carrier | /H -84 | 1 | |
| 12 | 944 502 035 02 | lock carrier | /H | 1 | |
| - | 951 512 447 00 | reinforcement plate<br>lock carrier | | 2 | |
| 13 | 477 813 529 | towing lug | | 1 | |
| 14 | 911 701 121 03 | support | | 1 | |
| - | N 015 430 1 | speed nut | | 2 | |
| 14A | 928 701 050 03 | support | | 2 | (CH,USA,J) |
| 15 | 803 011 243 | rubber washer | -84 | 2 | |
| 15 | 803 011 243 | rubber washer | 85- | 2 | |
| 16 | N 012 226 5 | spring washer<br>A 6 | -84 | 2 | |
| (16) | 900 151 027 02 | washer<br>A 5,3 | 85- | 2 | |
| 17 | N 014 140 5 | oval-head screw<br>M 6 X 15 | -84 | 2 | |
| 17 | N 014 143 1 | oval-head screw<br>AM 6 X 22 | 85- | 2 | |
| 18 | 900 076 010 02 | hexagon nut<br>M 6 | | 2 | |
| 18A | 211 611 483 | dust boot | | 1 | |
| (19) | A 944 503 912 01 | roof | -83 | 1 | M 650 |
| (19) | 944 503 912 01 | roof | -83 | 1 | M 650 |
| (19) | A 944 502 031 01 | roof | 84- | 1 | M 650 |
| (19) | 944 503 912 00 | roof | 84- | 1 | M 650 |
| 19 | A 477 817 111 B | roof | | 1 | |
| 19 | 944 503 912 02 | roof | | 1 | |
| 20 | 477 817 171 | cross member | /H -83 | 1 | |
| 20 | 477 817 171 A | roof frame | /H | 1 | |
| 21 | 477 813 285 | strut | | 1 | |
| 22 | 900 074 181 02 | screw<br>M 10 X 95 | | 4 | |
| 23 | 900 025 008 09 | washer<br>10,5 | | 4 | |
| 24 | 477 817 033 | reinforcement | /L/V | 1 | |
| (24) | 477 817 034 | reinforcement | /R/V | 1 | |

- -- E N D -- -

| Model | Year | MG | SG | Illustration | Restrictions | Update | 10:09 | 16.08.2004 | PORSCHE | PET | PORSCHE |
|---|---|---|---|---|---|---|---|---|---|---|---|
| 924 | 85 | 8 | 01 | 801-25 | | 179 | | | | | |

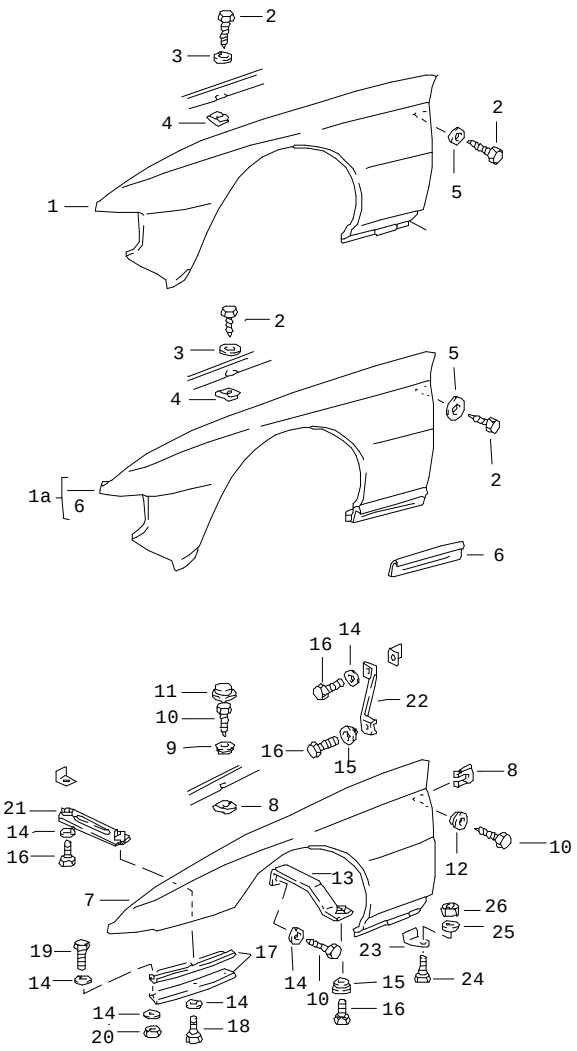


| Pos | Part Number | Name | Remarks | Qty | Model |
|---|---|---|---|---|---|
| | | wing | | | |
| 1 | 477 821 021 M | wing | /L 80 | 1 | 924 |
| (1) | 477 821 022 M | wing | /R 80 | 1 | 924 |
| (1) | 477 821 021 N | wing | /L 81- | 1 | 924 |
| (1) | 477 821 022 N | wing | /R 81- | 1 | 924 |
| 1A E | 477 821 021 D | wing | /L 80 | 1 | 924, TURBO |
| (1A) | 477 821 022 D | wing | /R 80 | 1 | 924, TURBO |
| (1A) | 477 821 021 J | wing | /L 81- | 1 | TURBO |
| (1A) | 477 821 022 J | wing | /R 81- | 1 | TURBO |
| 2 | N 013 891 1 | tapping screw<br>6,3 X 19 | | 28 | |
| 3 | 900 151 029 02 | washer<br>B 6,4 | | 26 | |
| 4 | 999 507 003 02 | speed nut<br>B 6,3 X 17 | | 26 | |
| 5 | N 011 524 7 | washer<br>A 6,4 | | 2 | |
| 6 | 477 809 681 | attachment strip | | 2 | |
| 7 | 937 503 105 02 | wing | /L | 1 | GT |
| (7) | 937 503 106 02 | wing | /R | 1 | GT |
| 8 | 999 507 003 02 | speed nut<br>B 6,3 X 17 | | 22 | GT |
| 9 | 937 503 255 01 | spacer | | 16 | GT |
| 10 | N 013 891 1 | tapping screw<br>6,3 X 19 | | 24 | GT |
| 11 | 937 503 237 00 | cap | | 16 | GT |
| | M3A | guards red | | | |
| | 041 | black | | | |
| | 97A | DIAMANTSILBER | | | |
| 12 | 937 503 255 00 | spacer | | 6 | GT |

| Pos | Part Number | Name | Remarks | Qty | Model | Pos | Part Number | Name | Remarks | Qty | Model |
|---|---|---|---|---|---|---|---|---|---|---|---|
| 13 | 937 503 035 00 | wing strut | | 2 | GT | | | | | | |
| 14 | N 011 524 7 | washer<br>A 6,4 | | 12 | GT | | | | | | |
| 15 | 937 503 255 00 | spacer | | 2 | GT | | | | | | |
| 15A | 937 503 255 01 | spacer | | 2 | GT | | | | | | |
| 16 | 999 217 013 00 | hexagon-head bolt<br>M6 X 12 | | 8 | GT | | | | | | |
| 17 | 937 503 513 00 | attachment strip | | 4 | GT | | | | | | |
| 18 | 999 217 014 00 | hexagon-head bolt<br>M6 X 16 | | 2 | GT | | | | | | |
| 19 | N 010 215 13 | hexagon-head bolt<br>M6 X 15 | | 4 | GT | | | | | | |
| 20 | 900 910 010 09 | lock nut<br>M 6 | | 4 | GT | | | | | | |
| 21 | 937 503 037 00 | bracket | | 2 | GT | | | | | | |
| 22 | 937 503 039 00 | bracket | | 2 | GT | | | | | | |
| 23 | 937 501 143 00 | bracket | | 2 | GT | | | | | | |
| 24 | 999 217 013 00 | hexagon-head bolt<br>M6 X 12 | | 2 | GT | | | | | | |
| 25 | N 011 524 7 | washer<br>A 6,4 | | 2 | GT | | | | | | |
| 26 | 900 076 010 07 | hexagon nut<br>M 6 | | 2 | GT | | | | | | |
| | | - -- E N D -- - | | | | | | | | | |

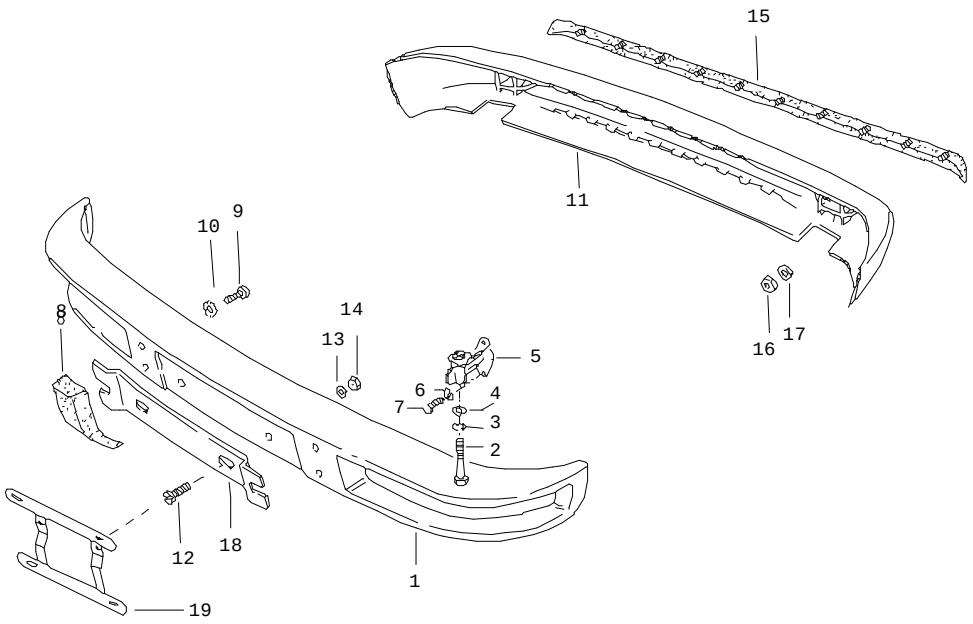


| Pos | Part Number | Name | Remarks | Qty | Model |
|---|---|---|---|---|---|
| | | bumper<br>without<br>impact absorber | | | +924,TURBO |
| 1 | 477 807 113 | bumper | /V | 1 | |
| (1) | 477 807 113 B | bumper | /V | 1 | M288 |
| 2 | 900 074 064 02 | hexagon-head bolt<br>M 10 X 60 | | 4 | |
| 3 | 900 027 016 02 | lock ring<br>B 10 | | 4 | |
| 4 | 900 025 008 09 | washer<br>A 10,5 | | 4 | |
| 5 | 477 807 131 A | bumper reinforcement | | 4 | |
| 6 | 900 027 015 02 | lock ring<br>A 8 | | 8 | |
| 7 | 900 075 079 02 | hexagon-head bolt<br>M 8 X 20 | | 8 | |
| 8 | 477 807 193 | bumper horn<br>for bumper | /L | 1 | |
| (8) | 477 807 194 | bumper horn<br>for bumper | /L | 1 | |
| 9 | 900 067 011 02 | pan-head screw<br>M 6 X 20 | | 4 | |
| 10 | N 012 105 3 | serrated lock washer<br>A 6,4 | | 4 | |
| 11 | 477 807 313 | bumper | /H | 1 | |
| 12 | N 014 140 5 | oval-head screw<br>M 6 X 15 | -84 | 2 | |
| 12 | N 100 457 01 | countersunk-head screw<br>M 5 X 25 | 85- | 2 | |
| 13 | N 012 226 5 | spring washer<br>A 6,3 | -84 | 2 | |
| 13 | 900 151 027 02 | washer<br>A 5,3 | 85- | 2 | |
| 14 | 900 076 010 02 | hexagon nut<br>M 6 | -84 | 2 | |

| Pos | Part Number | Name | Remarks | Qty | Model |
|---|---|---|---|---|---|
| 14 | 900 910 009 02 | lock nut<br>M 5 | 85- | 2 | |
| 15 | 477 807 319 | protective moulding | /H | 1 | |
| 16 | 113 101 175 | hexagon nut<br>M 6 | | 10 | |
| 17 | N 011 524 7 | washer<br>A 6,4 | | 10 | |
| 18 | 911 701 121 03 | support | | 1 | |
| - | N 015 430 1 | speed nut | | 2 | |
| 19 | 928 701 050 03 | support | | 1 | (J) |
| | | - -- E N D -- - | | | |

| Pos | Part Number | Name | Remarks | Qty | Model |
|---|---|---|---|---|---|

| Model | Year | MG | SG | Illustration | Restrictions | Update | | | | |
|---|---|---|---|---|---|---|---|---|---|---|
| 924 | 85 | 8 | 02 | 802-05 | | 179 | 10:10 | 16.08.2004 | PORSCHE | PET | PORSCHE |

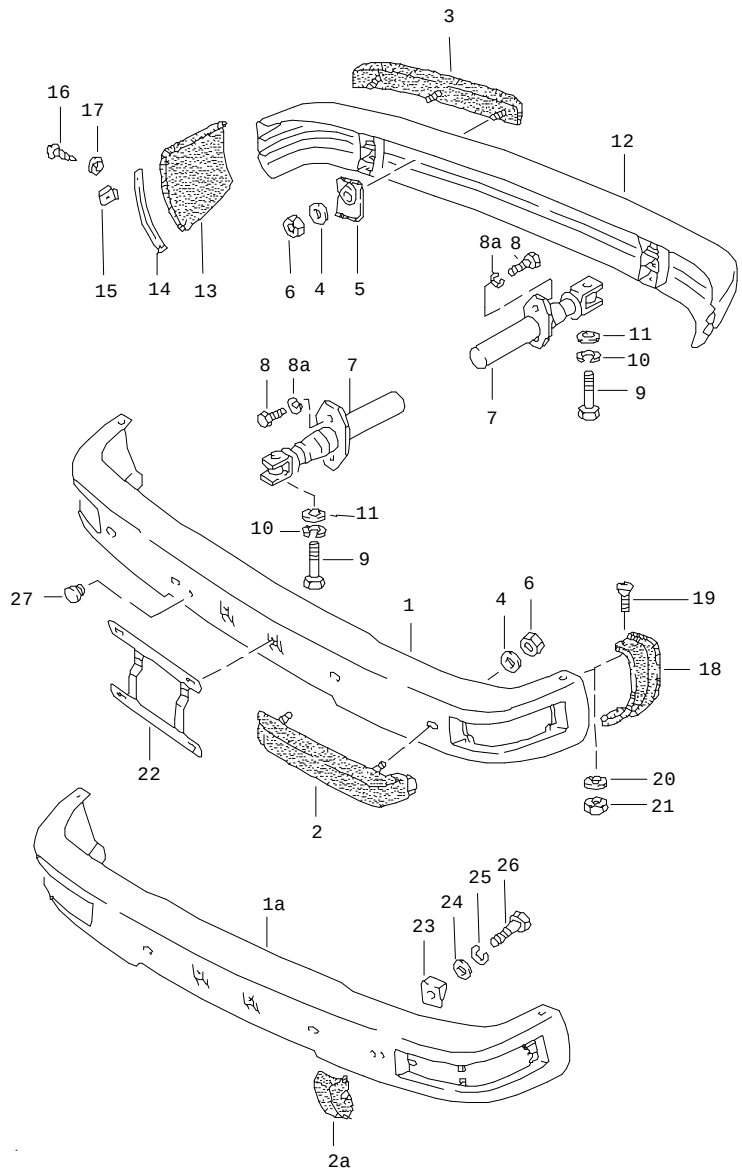


| Pos | Part Number | Name | Remarks | Qty | Model |
|---|---|---|---|---|---|
| | | bumper<br>with<br>impact absorber | | | +924,TURBO |
| (1A) | 477 807 109 H | bumper<br>use also:<br>999.703.181.40 | /V | 1<br><br>1 | M 058 |
| (1A) | 477 807 109 C | bumper<br>F >>92CN4 02197<br>F >>93CN1 00305 | /V | 1 | M 058/288<br>924<br>TURBO |
| (1A) | 477 807 109 J | bumper<br>F 92CN4 02198>><br>F 93CN1 00306>> | /V | 1 | M 058/288 |
| 2A | 477 807 353 | bumper horn | /L | 1 | M 058 |
| (2A) | 477 807 354 | bumper horn | /R | 1 | M 058 |
| (3) | 477 807 157 | rubber moulding | /L | 1 | |
| 3 | 477 807 158 | rubber moulding | /R | 1 | |
| 4 | N 011 612 3 | washer<br>R 7 | | 6 | M 058 |
| 5 | 477 807 197 | support | /H | 6 | |
| 6 | 113 101 175 | hexagon nut | | 6 | M 58 |
| 7 | 944 505 017 03 | impact absorber | | 4 | |
| 8 | N 010 240 16 | hexagon-head bolt<br>M 8 X 20 | | 8 | |
| 8A | 900 027 015 02 | lock ring<br>A 8 | | 8 | |
| 9 | N 010 165 2 | hexagon-head bolt<br>M 12 X 65 | | 4 | |
| 10 | N 012 012 4 | lock ring<br>B 12 | | 4 | |
| 11 | N 011 531 7 | washer<br>A 13 | | 4 | |
| 12 | 477 807 301 A | bumper | /H | 1 | |
| (13) E | 477 807 343 | cover | /L | 1 | |
| 13 | 477 807 344 | cover | /R | 1 | |

| Pos | Part Number | Name | Remarks | Qty | Model |
|---|---|---|---|---|---|
| (14) | 477 807 345 | insert | /L | 1 | |
| 14 | 477 807 346 | insert | /R | 1 | |
| 15 | N 015 438 1 | speed nut<br>B 3,6 X 16,5 | | 4 | |
| 16 | N 013 959 3 | tapping screw<br>B 3,5 X 16 | | 4 | |
| 17 | 900 151 028 02 | washer | | 4 | |
| 18 | 477 807 347 | cap | /L | 1 | |
| (18) | 477 807 348 | cap | /R | 1 | |
| 19 | N 014 260 1 | oval-head screw<br>AM 4 X 14 | | 4 | |
| 20 | 900 151 028 02 | washer<br>B 4,3 | | 4 | |
| 21 | N 011 004 6 | hexagon nut<br>M 4 | | 4 | |
| 22 | 928 701 050 03 | support | | 1 | |
| 23 | 477 807 361 | plate | /L | 1 | M58 |
| (23) | 477 807 362 | plate | /R | 1 | M58 |
| 24 | N 011 652 1 | washer<br>7 | | 2 | M58 |
| 25 | N 012 006 4 | lock ring<br>B 6 | | 2 | M58 |
| 26 | N 010 339 3 | hexagon-head bolt<br>M 6 X 40 | | 2 | M58 |
| 27 | 999 703 181 40 | plug<br>towing lug<br>see group<br>0/01/00 | | 1<br>1 | M58<br>M 058 |
| | | - -- E N D -- - | | | |

| Pos | Part Number | Name | Remarks | Qty | Model |
|---|---|---|---|---|---|
| | | | | | |

| Model | Year | MG | SG | Illustration | Restrictions | Update | | | | |
|---|---|---|---|---|---|---|---|---|---|---|
| 924 | 85 | 8 | 02 | 802-10 | | 179 | 10:10 | 16.08.2004 | PORSCHE | PET | PORSCHE |

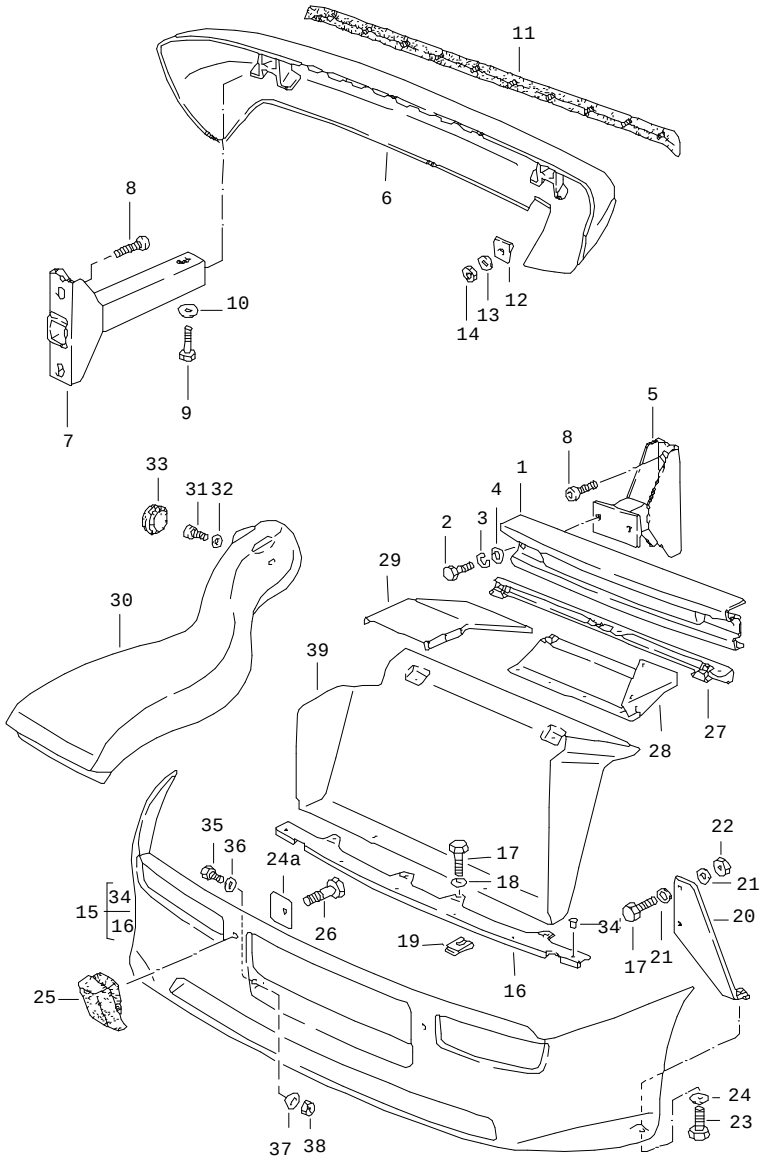


| Pos | Part Number | Name | Remarks | Qty | Model |
|---|---|---|---|---|---|
| | | bumper<br>spoiler<br>air duct | <br>/V | | +GT |
| 1 | 937 505 113 00 | bumper | /V | 1 | |
| 2 | 900 075 085 02 | hexagon-head bolt<br>M 8 X 20 | | 4 | |
| 3 | 900 027 015 02 | lock ring<br>B 8 | | 4 | |
| 4 | 900 151 008 02 | washer<br>8,4 | | 4 | |
| 5 | 937 505 027 02 | bumper reinforcement | /V | 2 | |
| 6 | 937 505 017 00 | bumper | /H | 1 | |
| 7 | 937 505 027 01 | bumper reinforcement | /H | 2 | |
| 8 | N 014 707 4 | pan-head screw<br>M 8 X 15 | | 8 | |
| 9 | 900 074 134 02 | hexagon-head bolt<br>M 8 X 45 | | 2 | |
| 10 | 900 025 007 02 | washer<br>A 8,4 | | 2 | |
| 11 | 477 807 319 | protective moulding | /H | 1 | |
| 12 | E 937 505 163 00 | plate | | 10 | |
| 13 | N 011 524 7 | washer<br>A 6,4 | | 10 | |
| 14 | 113 101 175 | hexagon nut<br>M 6 | | 10 | |
| 15 | E 937 505 371 02 | spoiler | /V | 1 | |
| 16 | 937 505 375 00 | reinforcement | /V | 1 | |
| 17 | 999 072 005 09 | hexagon-head bolt<br>M 6 X 12 | | 8 | |
| 18 | 900 151 006 09 | washer<br>B 6,4 | | 4 | |
| 19 | 999 507 333 02 | captive nut<br>M 6 | | 4 | |
| 20 | 937 505 031 00 | bracket | /L | 1 | |

| Pos | Part Number | Name | Remarks | Qty | Model |
|---|---|---|---|---|---|
| (20) | 937 505 032 00 | bracket | /R | 1 | |
| 21 | N 011 524 7 | washer<br>A 6,4 | | 8 | |
| 22 | 900 910 010 09 | lock nut<br>M 6 | | 8 | |
| 23 | 999 217 013 00 | hexagon-head bolt<br>M 6 X 12 | | 2 | |
| 24 | 937 503 255 01 | spacer | | 2 | |
| 24A | 937 503 257 00 | mounting plate | | 2 | |
| 25 | 937 505 181 00 | buffer | /L | 1 | |
| (25) | 937 505 182 00 | buffer | /R | 1 | |
| 26 | E 999 217 016 00 | hexagon-head bolt<br>M 6 X 20 | | 2 | |
| 27 | 937 501 251 00 | attachment strip | | 1 | |
| 28 | 937 505 071 00 | filler plate | | 1 | |
| 29 | 937 505 173 00 | cover | | 1 | |
| 30 | E 937 505 381 00 | air well | /L | 1 | |
| (30) | 937 505 382 00 | air well | /R | 1 | |
| 31 | E 999 218 006 07 | pan-head screw<br>M 8 X 20 | | 2 | |
| 32 | E 900 151 008 07 | washer<br>8,4 | | 2 | |
| 33 | 803 803 583 | drain bush | | 2 | |
| 34 | E N 901 046 01 | rivet<br>A 4,8 X 9,6 | | 9 | |
| 35 | E 900 075 329 00 | hexagon-head bolt<br>M6 X 12 | | 2 | |
| 36 | N 011 524 7 | washer<br>6,4 | | 2 | |
| 37 | 937 503 255 00 | spacer | | 2 | |
| 38 | 900 910 010 09 | lock nut<br>M 6 | | 2 | |
| 39 | 937 501 241 00 | air duct | | 1 | |
| - | 928 025 283 02 | rubber seal<br>air duct<br>290 MM<br>190 MM<br>150 MM | | *<br><br>1<br>1<br>1 | |
| (39) | E 937 501 241 01 | air duct | | 1 | M 573 |
| - | 928 025 283 02 | rubber seal<br>air duct<br>290 MM<br>150 MM | | *<br><br>1<br>1 | M 573<br><br>M 573<br>M 573 |
| - | 999 217 014 00 | hexagon-head bolt<br>M 6 X 16 | | 2 | |
| - | 900 151 006 09 | washer<br>B 6,4 | | 2 | |

- -- E N D -- -

| Model | Year | MG | SG | Illustration | Restrictions | Update | | | | |
|---|---|---|---|---|---|---|---|---|---|---|
| 924 | 85 | 8 | 03 | 803-00 | | 179 | 10:10 | 16.08.2004 | PORSCHE | PET | PORSCHE |

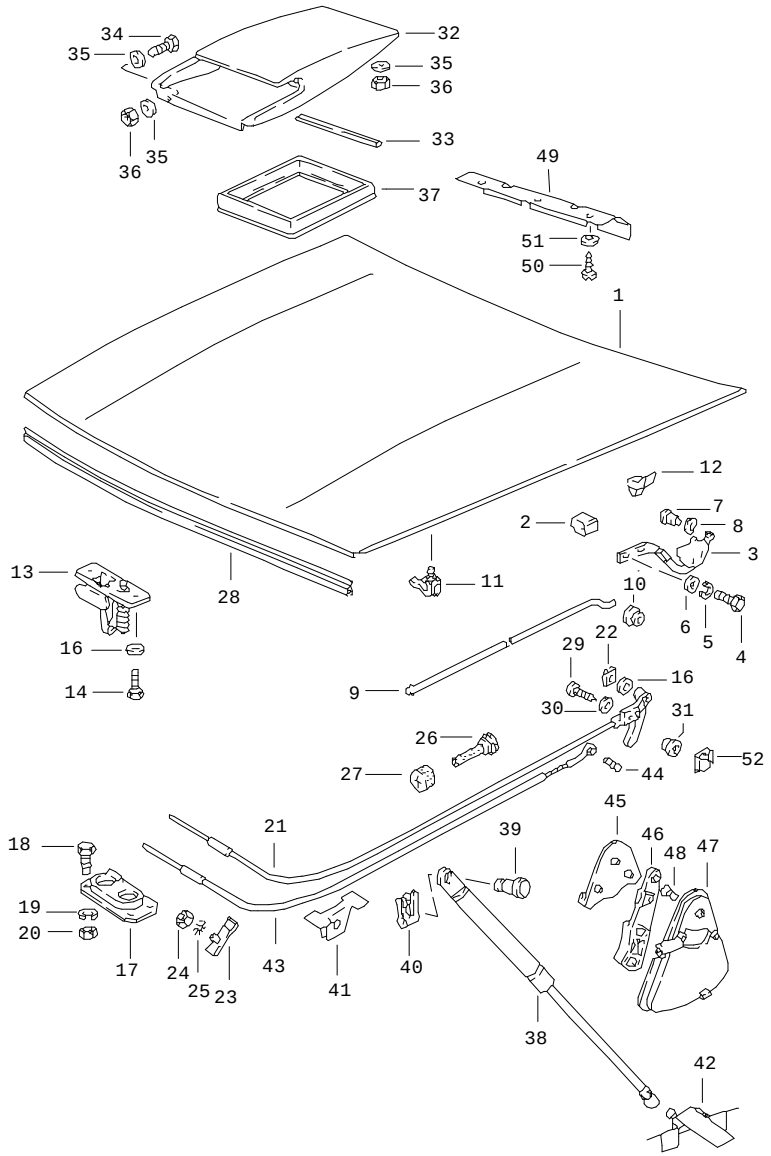


| Pos | Part Number | Name | Remarks | Qty | Model |
|---|---|---|---|---|---|
| | | cover | /V | | |
| 1 | 944 511 905 00 | cover | | 1 | 924 |
| (1) | 944 511 905 01 | cover | | 1 | TURBO |
| (1) | 937 511 005 02 | cover | | 1 | GT |
| 2 | 477 823 185 | filler piece | | 2 | |
| 3 | 944 511 301 00 | hinge | /L | 1 | |
| (3) | 944 511 302 00 | hinge | /R | 1 | |
| 4 | N 010 240 16 | hexagon-head bolt<br>M 8 X 20 | | 8 | |
| 5 | 900 027 015 02 | lock ring<br>B 8 | | 8 | |
| 6 | N 011 525 13 | washer<br>A 8,4 | | 8 | |
| 7 | 477 823 307 | pin | -84 | 2 | |
| 7 | 944 511 307 00 | pin | 85- | 2 | |
| 8 | N 012 230 6 | spring washer<br>B 10 | -84 | 2 | |
| 8 | 944 511 309 00 | washer | 85- | 2 | |
| 9 | 477 823 363 A | hood stay | | 1 | |
| 10 | 171 823 395 | rubber mounting | | 1 | |
| (11) | 431 823 397 | support | | 1 | |
| 12 | 477 823 493 | guide piece | | 4 | 924,TURBO |
| (12) | 937 511 237 00 | guide piece | | 4 | GT |
| 13 | 477 823 507 | lock upper part<br>lid lock | | 1 | |
| 14 | 999 072 005 09 | hexagon-head bolt<br>M 6 X 12 | | 2 | |
| 16 | 999 025 049 02 | washer | -83 | 2 | |
| 17 | 928 511 027 02 | lid lock<br>lower part | | 1 | |

| Pos | Part Number | Name | Remarks | Qty | Model |
|---|---|---|---|---|---|
| 18 | 900 075 116 02 | hexagon-head bolt<br>M 4 X 8 | | 4 | |
| 19 | N 012 004 2 | lock ring<br>B 4 | | 4 | |
| 20 | N 011 004 6 | hexagon nut<br>M 4 | | 4 | |
| 21 | 477 823 531 A | lid lock cable | -83 | 1 | |
| 22 | N 012 855 1 | clamping washer | -83 | 1 | |
| 23 | 477 823 551 | clamping piece | | 1 | |
| 24 | 900 076 010 02 | hexagon nut<br>M 6 | | 1 | |
| 25 | N 042 121 3 | shake-proof washer<br>A 6,4 | | 1 | |
| 26 | 477 823 591 | grommet | | 1 | |
| 27 | 477 823 593 | plug | | 1 | |
| 28 | 928 511 141 04 | gasket | | 1 | |
| 29 | N 013 952 1 | tapping screw<br>4,8 X 50 | -83 | 2 | |
| 30 | 900 025 003 02 | washer<br>A 5,3 | -83 | 2 | |
| 31 | 477 823 165 | bush | | 2 | |
| 32 | 937 511 051 00 | air inlet | | 1 | GT |
| - | 937 571 121 01 | piping | | 1 | GT |
| | M3A | guards red | | | |
| | 041 | black | | | |
| | 97A | silver | | | |
| - | 999 911 276 40 | gasket | | * | |
| 33 | - | 250 MM | | 1 | GT |
| 34 | N 010 205 6 | hexagon-head bolt<br>M 5 X 10 | | 2 | GT |
| 35 | N 011 537 3 | washer<br>A 5,3 | | 11 | GT |
| 36 | 900 910 007 02 | lock nut<br>M 5 | | 9 | GT |
| 37 | 937 511 113 00 | gasket<br>charge air cooler | | 1 | GT |
| 38 | 944 511 351 01 | gas-filled strut | | 2 | 924 |
| 39 | 999 094 011 09 | bolt | | 2 | 924 |
| 40 | N 900 470 01 | lock washer | | 2 | |
| 41 | 944 511 373 00 | pneumatic spring mount | | 2 | 924 |
| 42 | 944 501 371 00 | pneumatic spring mount | /L | 1 | 924 |
| (42) | 944 501 372 00 | pneumatic spring mount | /R | 1 | 924 |
| 43 | 944 511 037 00 | bowden cable | 84- | 1 | |
| 44 | 900 197 018 00 | roll pin<br>4 X 12 | 84- | 1 | |
| 45 | 928 511 143 02 | cover | 84- | 1 | |
| 46 | 928 511 175 02 | pull handle | 84- | 1 | |
| | 70B | black | | | |
| 47 | 928 511 173 02 | cup | 84- | 1 | |
| | 70B | black | | | |
| 48 | 900 249 001 02 | countersunk-head screw<br>M 6 X 15 | 84- | 2 | |
| 49 | 944 511 201 00 | tab washer | | 1 | M 533 |
| 50 | 900 143 007 02 | tapping screw<br>BZ 4,2 X 13 | | 3 | M 533 |
| 51 | 900 025 002 02 | washer<br>BZ 4,3 X 9 | | 3 | M 533 |
| 52 | 999 591 468 02 | prestole cage<br>B 4,8 | | 2 | |

- -- E N D -- -

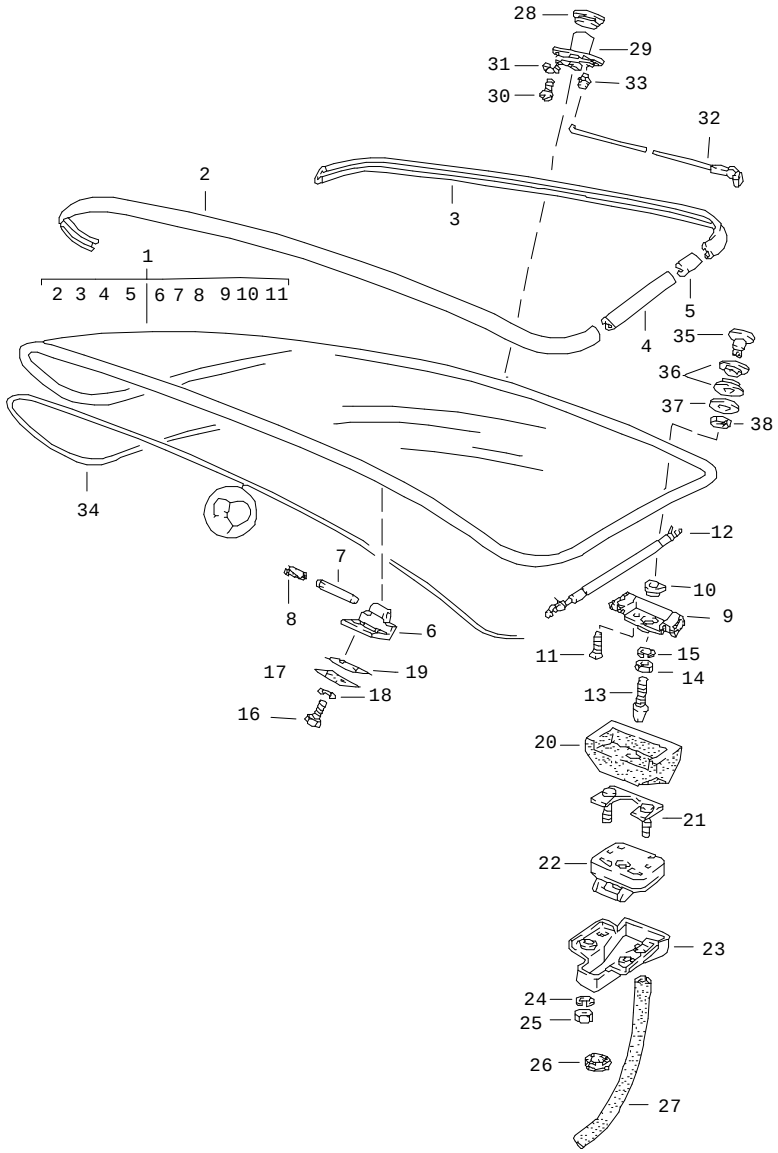


| Pos | Part Number | Name | Remarks | Qty | Model |
|---|---|---|---|---|---|
| | | rear lid<br>without<br>spoiler | | | +924 |
| 1 | 477 827 027 G | rear lid<br>with<br>moulding<br>without<br>M 425<br>see group<br>8/03/10<br>use also:<br>POSITION 35 -<br>POSITION 38<br>F >>92FN4 00898 | | 1 | M 425 |
| 1 | 944 512 027 02 | rear lid<br>with<br>moulding<br>----------<br>rear lid<br>together with<br>wiper motor<br>see group<br>9/04/05<br>----------<br>F 92FN4 00899>> | | 1 | |
| 2 | 477 853 313 | trim frame | | 1 | |
| 3 | 477 853 311 | trim frame | | 1 | |
| 4 | 477 853 315 | trim frame | /L | 1 | |
| (4) | 477 853 316 | trim frame | /R | 1 | |
| 5 | 477 853 367 | sleeve | | 4 | |
| 6 | 477 827 305 B | hinge half | | 2 | |
| 7 | A 944 512 311 00 | hinge pin | | 2 | |
| 7 | 944 512 311 00 | hinge pin | | 2 | |
| 8 | 477 827 441 | bush | | 2 | |
| 9 | 477 827 033 | housing<br>F >>92FN4 00898 | /L | 1 | |
| 9 | 944 512 033 01 | housing<br>F 92FN4 00899>> | /L | 1 | |
| (9) | 477 827 034 | housing<br>F >>92FN4 00898 | /R | 1 | |

| Pos | Part Number | Name | Remarks | Qty | Model |
|---|---|---|---|---|---|
| (9) | 944 512 034 01 | housing<br>F 92FN4 00899>> | /R | 1 | |
| 10 | 477 827 035 | rubber mounting | | 2 | |
| 11 | 999 219 011 07 | countersunk-head screw<br>M 6 X 16 | | 4 | |
| 12 | 477 827 348 F | gas-filled strut | /R | 1 | |
| (12) | 477 827 349 D | gas-filled strut | /L | 1 | |
| 13 | 477 827 527 | lock pin<br>F >>92FN4 00898 | | 2 | |
| 13 | 944 538 547 00 | lock pin<br>F 92FN4 00899>> | | 2 | |
| 14 | N 011 008 8 | hexagon nut<br>M 8 | | 2 | |
| 15 | 900 027 015 02 | lock ring<br>B 8 | | 2 | |
| 16 | 999 218 045 07 | pan-head screw<br>M 8 X 12 | | 4 | |
| 17 | 928 512 417 03 | plate | | 2 | |
| 19 | 944 512 413 00 | gasket<br>lid hinge | | 2 | |
| 20 | 477 827 365 A | gasket<br>F >>92FN4 00898 | /L | 1 | |
| 20 | 944 512 365 01 | gasket<br>F 92FN4 00899>> | /L | 1 | |
| (20) | 477 827 366 A | gasket<br>F >>92FN4 00898 | /R | 1 | |
| (20) | 944 512 366 01 | gasket<br>F 92FN4 00899>> | /R | 1 | |
| 21 | 951 512 447 00 | reinforcement plate | | 2 | |
| 22 | 477 827 505 A | rear lid lock<br>F >>92FN4 00898 | /L | 1 | |
| 22 | 944 538 955 01 | rear lid lock<br>F 92FN4 00899>> | /L | 1 | |
| (22) | 477 827 506 A | rear lid lock<br>F >>92FN4 00898 | /R | 1 | |
| (22) | 944 538 956 01 | rear lid lock<br>F 92FN4 00899>> | /R | 1 | |
| 23 | 477 827 541 | water drip pan | | 2 | |
| 24 | N 012 006 4 | lock ring<br>B 6 | | 4 | |
| 25 | 900 076 010 02 | hexagon nut<br>M 6 | | 4 | |
| 26 | 111 971 911 A | rubber sleeve | | 2 | |
| 27 | 477 827 547 | hose<br>400 MM | | 2 | |
| 28 | 477 827 529 A | sealing ring | | 1 | |
| 29 | 477 898 082 | lock cylinder<br>w/o stipulated lock number | | 1 | |
| (29) | 477 827 573 B | lock cylinder<br>with stipulated lock-no. | | 1 | |
| 30 | N 014 139 5 | oval-head screw<br>M 6 X 12 | | 2 | |
| 31 | N 012 007 02 | lock ring<br>A 6 | | 2 | |
| 32 | 477 827 583 | pull rod | | 2 | |
| 33 | 993 531 563 00 | linkage clip | | 2 | |
| 34 | 944 512 043 00 | seal for rear flap | | 1 | |
| - | 999 591 342 02 | u-clamp | | 4 | |
| | | - -- E N D -- - | | | |

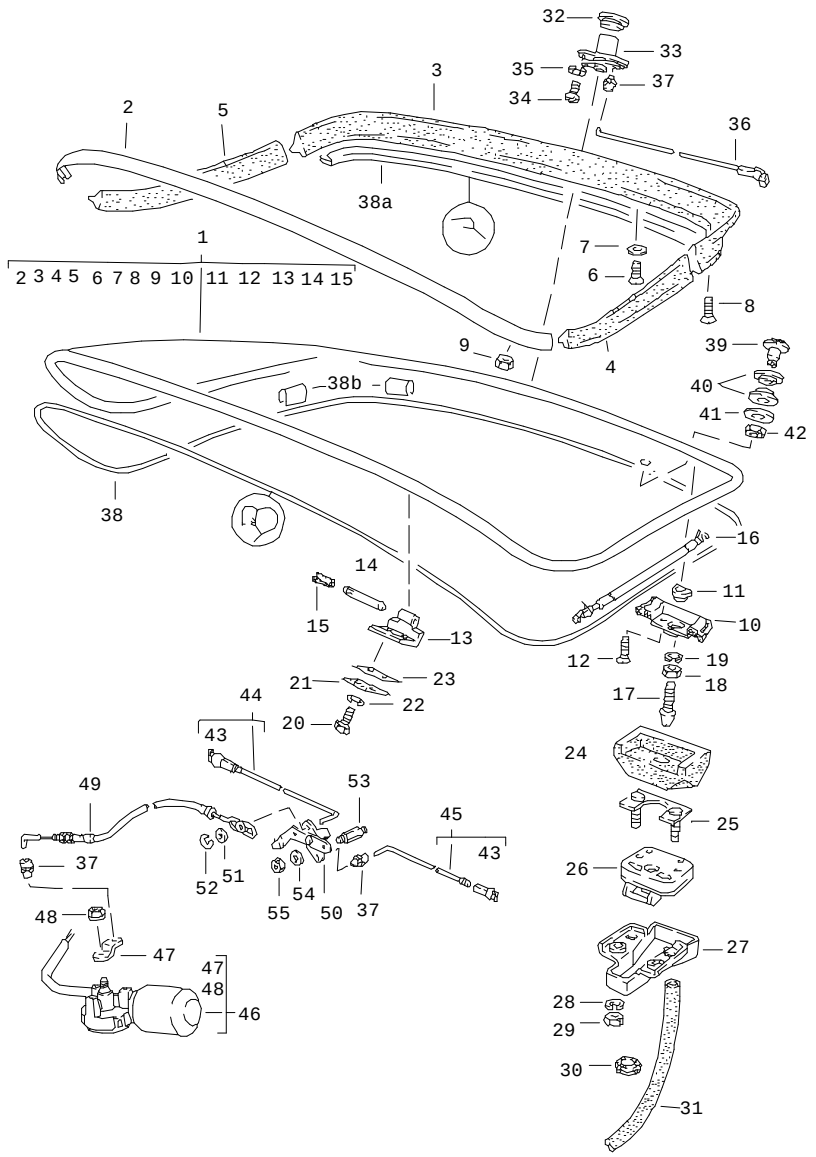


| Pos | Part Number | Name | Remarks | Qty | Model |
|---|---|---|---|---|---|
| | | rear lid<br>with<br>rear spoiler | | | |
| 1 | 477 827 027 K | rear lid<br>F >>92FN4 00898 | | 1 | |
| 1 | 944 512 027 00 | rear lid<br>F 92FN4 00899>> | | 1 | |
| (1) | 477 827 027 J | rear lid | | 1 | GT |
| 2 | 477 853 313 A | trim frame<br>----------<br>rear lid<br>together with<br>wiper motor<br>see group<br>9/04/05<br>---------- | | 1 | |
| 3 | 477 827 555 | rear spoiler<br>centre | | 1 | |
| (3) | 937 512 555 00 | rear spoiler | | 1 | GT |
| | TPP | centre | | | |
| 4 | 477 827 557 | rear spoiler<br>lateral | /L | 1 | |
| (4) | 937 512 557 00 | rear spoiler | /L | 1 | GT |
| | TPP | lateral | | | |
| 5 | 477 827 558 | rear spoiler | /R | 1 | |
| (5) | 937 512 558 00 | rear spoiler | /R | 1 | GT |
| | TPP | lateral | | | |
| 6 | N 033 183 1 | countersunk-head screw<br>M 5 X 20 | | 7 | |
| 7 | 477 827 453 A | washer | | 7 | |
| 8 | N 033 185 1 | countersunk-head screw<br>M 4 X 16 | | 2 | |
| 9 | N 021 255 1 | slotted nut<br>M 4 | | 12 | |

| Pos | Part Number | Name | Remarks | Qty | Model |
|---|---|---|---|---|---|
| 10 | 477 827 033 | housing<br>F >>92CN4 02197<br>F >>93CN1 00305 | /L | 1 | 924<br>TURBO |
| 10 | 477 827 033 A | housing<br>F 92CN4 02198>><br>F 93CN1 00306>><br>F >>92FN4 00898 | /L | 1 | 924<br>TURBO |
| 10 | 944 512 033 01 | housing<br>F 92FN4 00899>> | /L | 1 | |
| (10) | 477 827 034 | housing<br>F >>92CN4 02197<br>F >>93CN1 00305 | /R | 1 | 924<br>TURBO |
| (10) | 477 827 034 A | housing<br>F 92CN4 02198>><br>F 93CN1 00306>><br>F >>92FN4 00898 | /R | 1 | 924<br>TURBO |
| 10 | 944 512 034 01 | housing<br>F 92FN4 00899>> | /R | 1 | |
| 11 | 477 827 035 | rubber mounting | | 2 | |
| 12 | 999 219 011 07 | countersunk-head screw | | 4 | |
| 13 | 477 827 305 B | hinge half | | 2 | |
| 14 | 944 512 311 00 | hinge pin | | 2 | |
| 15 | 477 827 441 | bush | | 2 | |
| (16) | 477 827 348 F | gas-filled strut | /R | 1 | |
| 16 | 477 827 349 D | gas-filled strut | /L | 1 | |
| 17 | 477 827 527 | lock pin<br>F >>92FN4 00898 | | 2 | |
| 17 | 944 538 547 00 | lock pin<br>F 92FN4 00899>> | | 2 | |
| 18 | N 011 008 8 | hexagon nut<br>M 8 | | 2 | |
| 19 | 900 027 015 02 | lock ring<br>B 8 | | 2 | |
| 20 | 999 218 045 07 | pan-head screw<br>M 8 X 12 | | 4 | |
| 21 | 928 512 417 03 | plate | | 2 | |
| 23 | 944 512 413 00 | gasket<br>lid hinge | | 2 | |
| 24 | 477 827 365 A | gasket<br>F >>92FN4 00898 | /L | 1 | 924 |
| (24) | 477 827 365 D | gasket | /L -84 | 1 | TURBO,GT |
| 24 | 944 512 365 01 | gasket<br>F 92FN4 00899>> | /L | 1 | |
| (24) | 477 827 366 A | gasket<br>F >>92FN4 00898 | /R | 1 | 924 |
| (24) | 477 827 366 D | gasket | /R -84 | 1 | TURBO,GT |
| (24) | 944 512 366 01 | gasket<br>F 92FN4 00899>> | /R | 1 | |
| 25 | 951 512 447 00 | reinforcement plate | | 2 | |
| 26 | 477 827 505 A | rear lid lock<br>F >>92FN4 00898 | /L | 1 | |
| 26 | 944 538 955 01 | rear lid lock<br>F 92FN4 00899>> | /L | 1 | |
| (26) | 477 827 506 A | rear lid lock<br>F >>92FN4 00898 | /R | 1 | |
| (26) | 944 538 956 01 | rear lid lock<br>F 92FN4 00899>> | /R | 1 | |
| 27 | 477 827 541 | water drip pan | | 2 | |
| 28 | N 012 006 4 | lock ring<br>B 6 | | 4 | |
| 29 | 900 076 010 02 | hexagon nut<br>M 6 | | 4 | |
| 30 | 111 971 911 A | rubber sleeve | | 2 | |
| 31 | 477 827 547 | hose<br>400 MM | | 2 | |
| 32 | 477 827 529 A | sealing ring | | 1 | |
| 33 | 477 898 082 | lock cylinder<br>w/o stipulated lock number | | 1 | |
| (33) | 477 827 573 B | lock cylinder<br>with stipulated lock-no. | | 1 | |

| Pos | Part Number | Name | Remarks | Qty | Model |
|---|---|---|---|---|---|
| 34 | N 014 139 5 | oval-head screw<br>M 6 X 12 | | 2 | |
| 35 | N 012 007 02 | lock ring<br>A 6 | | 2 | |
| 36 | 477 827 583 | pull rod | -83 | 2 | |
| 37 | 993 531 563 00 | linkage clip | | 2 | |
| 38 | 944 512 043 00 | seal for rear flap | | 1 | |
| 38A | 944 512 463 00 | additional gasket | | 1 | |
| 38B | 999 591 342 02 | u-clamp | | 4 | |
| 39 | 477 845 333 | screw plug | | 1 | |
| 40 | 477 955 439 | grommet | | 2 | |
| 41 | 477 845 331 | washer | | 1 | |
| 42 | N 011 118 14 | hexagon nut<br>M 8 | | 1 | |
| 43 | N 015 704 1 | ball socket | 84- | 1 | |
| 44 | 944 512 092 01 | pull rod | /R 84- | 1 | |
| 45 | 944 512 091 00 | pull rod | /L 84- | 1 | |
| 46 | 944 624 024 01 | electric motor<br>see technical information<br>GR.5,NR.1/93 | 84- | 1 | |
| 47 | 944 624 824 00 | lever | 84- | 1 | |
| 48 | 999 084 045 02 | lock nut | 84- | 1 | |
| 49 | 944 512 097 02 | bowden cable | 84- | 1 | |
| 50 | 944 512 095 00 | lever | 84- | 1 | |
| 51 | 999 704 104 50 | rubber washer | 84- | 1 | |
| 52 | N 012 054 2 | clamping washer | 84- | 1 | |
| 53 | 944 512 201 00 | stud | 84- | 2 | |
| 54 | N 011 524 7 | washer<br>B 6 | 84- | 2 | |
| 55 | 900 076 010 02 | hexagon nut<br>M 6 | 84- | 2 | |

| Pos | Part Number | Name | Remarks | Qty | Model |
|---|---|---|---|---|---|
| | | - -- E N D -- - | | | |

| Model | Year | MG | SG | Illustration | Restrictions | Update | | | | |
|---|---|---|---|---|---|---|---|---|---|---|
| 924 | 85 | 8 | 04 | 804-00 | | 179 | 10:10 | 16.08.2004 | PORSCHE | PET | PORSCHE |

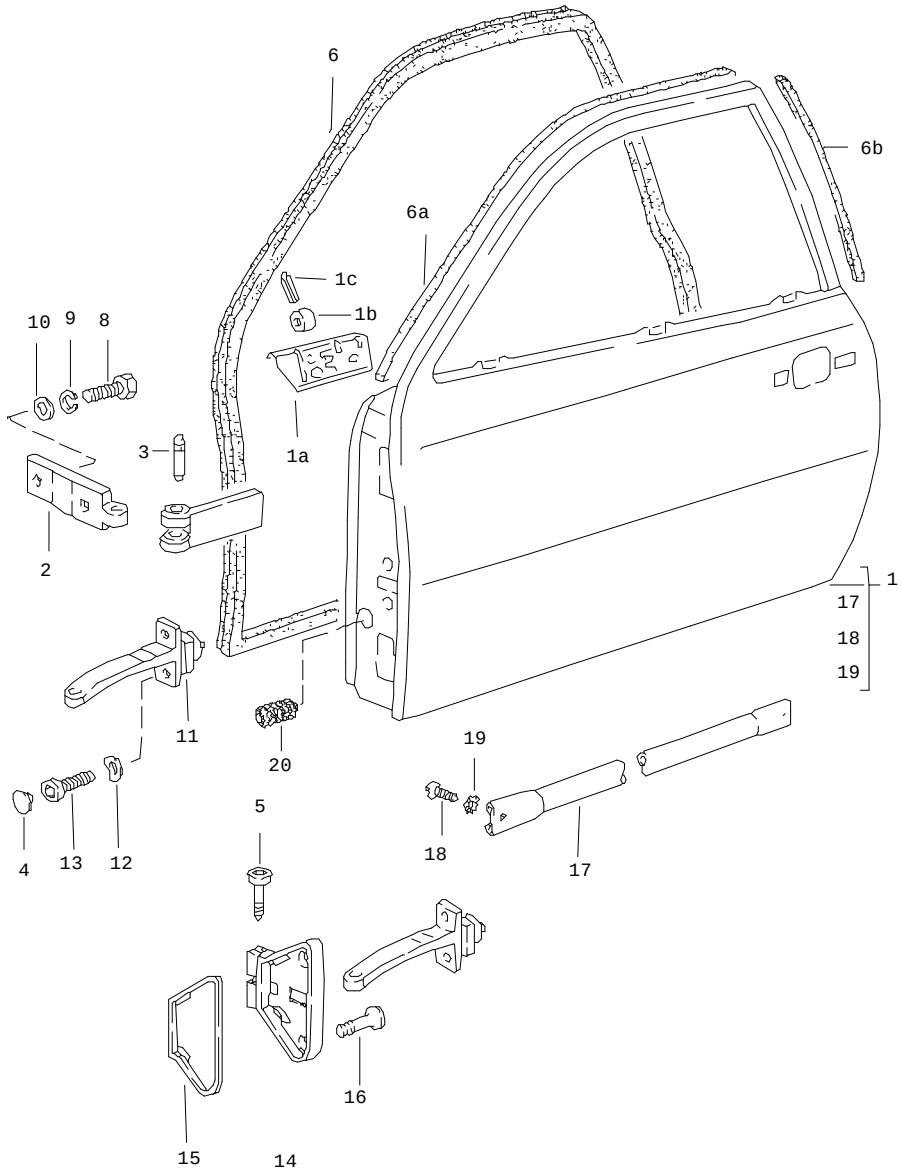


| Pos | Part Number | Name | Remarks | Qty | Model |
|---|---|---|---|---|---|
| | | door | | | |
| 1 | 477 831 051 AA | door in white<br>prepared for<br>door mirror | /L | 1 | |
| 1 | 478 831 051 R | door in white<br>not prepared for<br>door mirror | /RL/L | 1 | |
| (1) | 478 831 052 R | door in white<br>prepared for<br>door mirror | /R | 1 | |
| (1) | 477 831 052 AA | door in white<br>not prepared for<br>door mirror | /R | 1 | |
| 1A | 477 831 139 C | reinforcement<br>door mirror | /L | 1 | |
| (1A) | 477 831 140 C | reinforcement<br>door mirror | /R | 1 | |
| 1B | 928 531 235 03 | threaded piece | | 2 | |
| 1C | N 013 295 1 | tensioning sleeve | | 2 | |
| 2 | 171 831 403 | hinge half | | 4 | |
| 3 | 321 831 421 | hinge pin | | 4 | |
| 5 | 928 537 419 03 | pan-head screw | | 2 | |
| 6 | 944 537 091 00 | door seal | /L | 1 | |
| (6) | 944 537 092 00 | door seal | /R | 1 | |
| 6A | 477 837 233 | additional gasket<br>F >>92CN4 01894<br>F >>93CN1 00246<br>F >>93CN1 00246 | | 2 | <br>924<br>TURBO<br>TURBO (J) |
| 6B | 477 837 235 | additional gasket<br>F >>92CN4 01894<br>F >>93CN1 00246 | | 2 | <br>924<br>TURBO |
| 8 | 900 119 052 02 | pan-head screw<br>M 8 X 15 | | 8 | |
| 9 | 900 027 015 02 | lock ring<br>B 8 | | 8 | |
| 10 | 823 711 815 | washer | | 8 | |

| Pos | Part Number | Name | Remarks | Qty | Model |
|---|---|---|---|---|---|
| 11 | 944 537 609 00 | door support | | 2 | |
| 11 | 944 537 609 00 | door support | | 2 | |
| 12 | N 011 524 7 | washer<br>B 6 | | 4 | |
| 13 | 900 067 009 02 | pan-head screw<br>M 6 X 15 | | 4 | |
| 14 | 928 537 417 02 | bearing bracket | /L | 1 | |
| (14) | 928 537 418 02 | bearing bracket | /R | 1 | |
| 15 | 928 537 425 02 | desk pad | /L | 1 | |
| (15) | 928 537 426 02 | desk pad | /R | 1 | |
| 16 | 928 537 459 02 | oval-head screw<br>M 6 X 20 | | 4 | |
| 17 | 477 831 155 | reinforcement | | 2 | M 190 |
| 18 | E 999 147 006 02 | oval-head screw<br>M 8 X 16 | | 4 | M 190 |
| 19 | E N 012 133 1 | shake-proof washer<br>V 8,4 | | 4 | M 190 |
| 20 | 477 971 910 | bellows | | 2 | |
| | | - -- E N D -- - | | | |

| Pos | Part Number | Name | Remarks | Qty | Model |
|---|---|---|---|---|---|

| Model | Year | MG | SG | Illustration | Restrictions | Update | | | | |
|---|---|---|---|---|---|---|---|---|---|---|
| 924 | 85 | 8 | 04 | 804-05 | | 179 | 10:10 | 16.08.2004 | PORSCHE | PET | PORSCHE |

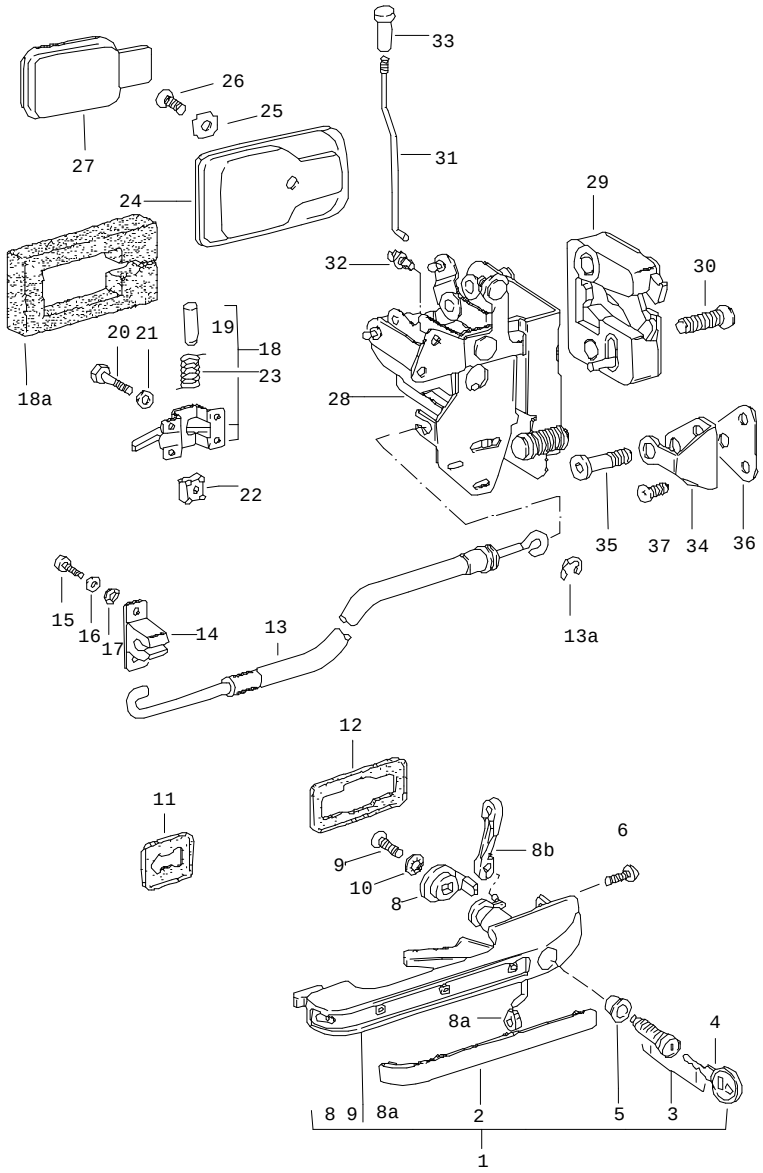


| Pos | Part Number | Name | Remarks | Qty | Model |
|---|---|---|---|---|---|
| | | door handle<br>door lock | | | |
| 1 | 477 837 037 H | outer door handle | /L | 1 | |
| (1) | 477 837 038 H | outer door handle | /R | 1 | |
| 2 | 823 837 239 | cover | | 2 | |
| 3 | 944 538 903 00 | lock cylinder<br>w/o stipulated lock number | | 2 | |
| (3) | 944 538 903 01 | lock cylinder<br>with stipulated lock-no. | | 2 | |
| - | - | grease<br>for lock cylinder<br>see group<br>0/05/00 | | | |
| 4 | 477 837 219 | blank key | | 2 | |
| (4) | 944 538 933 00 | key<br>with stipulated lock-no. | | 1 | |
| 5 | 111 837 227 B | sealing ring | | 2 | |
| 6 | 803 837 951 | self-lock. fillister screw | | 2 | |
| 8 | 477 837 497 | driver | | 2 | |
| 8A | 999 168 004 40 | ball socket | | 2 | |
| 8B A | 477 837 505 A | connecting piece | /L -82 | 1 | |
| 8B | 477 837 505 A | connecting piece | /L | 1 | |
| (8B) | 477 837 506 A | connecting piece | /R | 1 | |
| 9 | N 033 165 1 | countersunk-head screw<br>AM 4 X 8 | | 2 | |
| 10 | N 012 116 1 | serrated lock washer<br>V 4,3 | | 2 | |
| 11 | 867 837 209 | desk pad | /V | 2 | |
| 12 | 171 837 211 A | desk pad | /H | 2 | |
| 13 | 477 837 017 A | bowden cable | | 2 | |
| 13A | 900 116 002 02 | lock washer<br>3,2 | | 2 | |

| Pos | Part Number | Name | Remarks | Qty | Model |
|---|---|---|---|---|---|
| 14 | 477 837 115 A | support | | 2 | |
| 15 | N 014 139 7 | oval-head screw<br>M 6 X 12 | | 4 | |
| 16 | N 011 524 7 | washer<br>A 6,4 | | 4 | |
| 17 | N 011 524 7 | washer<br>B 6 | | 4 | |
| 18 | 171 837 019 | inner door release | /L | 1 | |
| (18) | 171 837 020 | inner door release | /R | 1 | |
| | 041 | black | | | |
| | 90V | brown | | | |
| 18A | 477 831 304 A | seal | | 2 | |
| 19 | N 013 666 1 | rivet<br>B 4 X 32 | | 2 | |
| 20 | N 010 210 13 | hexagon-head bolt<br>M 6 X 10 | | 8 | |
| 21 | 111 837 941 | cup spring<br>6,4 X 12,5 | | 8 | |
| 22 | 477 837 521 | captive nut<br>M 6 | | 8 | |
| 23 | 811 837 723 | spring<br>inner door release | | 2 | |
| 24 | 171 837 235 | rose | | 2 | |
| | 01C | black | | | |
| | 90V | brown | | | |
| 25 | 111 837 291 | cone washer | | 2 | |
| 26 | N 014 216 1 | countersunk-head screw<br>AM 5 X 10 | | 2 | |
| 27 | 311 837 247 | cup | | 2 | |
| | 043 | black | | | |
| | 90V | brown | | | |

| Pos | Part Number | Name | Remarks | Qty | Model |
|---|---|---|---|---|---|
| 28 | 928 537 907 03 | lock<br>inner part | /LL/L | 1 | |
| (28) | 928 537 908 04 | lock<br>inner part | /LL/R | 1 | |
| (28) | 927 537 907 04 | lock<br>inner part | /RL/L | 1 | |
| (28) | 927 537 908 03 | lock<br>inner part | /RL/R | 1 | |
| 29 | 928 537 153 03 | door lock<br>outer part | /L | 1 | |
| (29) | 928 537 154 03 | door lock<br>outer part | /R | 1 | |
| 30 | 928 537 721 02 | oval-head screw<br>M 8 X 35 | | 4 | |
| 31 | 477 837 183 A | locking rod | | 2 | |
| 32 | 477 837 187 | clip | | 2 | |
| 33 | 111 837 187 B | knob | | 2 | |
| | 043 | black | | | |
| 34 | 928 537 133 02 | door lock striker | | 2 | |
| 35 | 928 537 131 03 | lock pin | | 2 | |
| 36 | 928 537 135 04 | desk pad | | 2 | |
| 37 | 900 269 027 02 | countersunk-head screw<br>M 8 X 16 | | 4 | |
| | | - -- E N D -- - | | | |

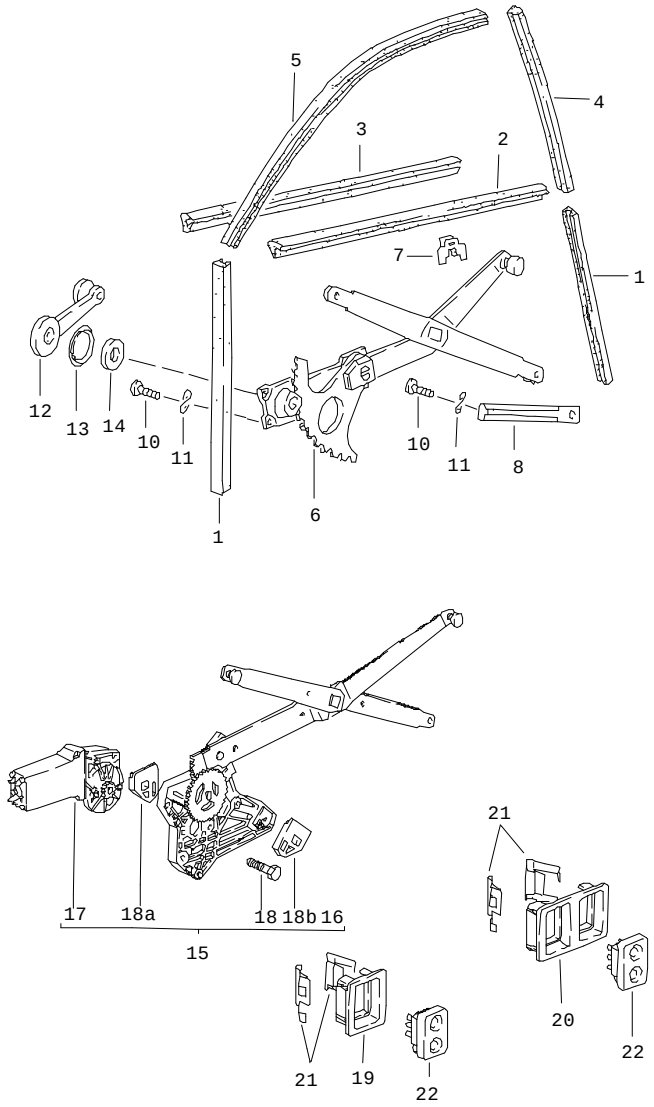


| Pos | Part Number | Name | Remarks | Qty | Model |
|---|---|---|---|---|---|
| | | window guide<br>power windows | | | |
| 1 | 477 837 385 | window guide<br>lower | | 4 | |
| 2 | 477 837 469 A | sealing<br>outer | /L | 1 | |
| (2) | 477 837 470 A | sealing<br>outer | /R | 1 | |
| 3 | 477 837 471 A | seal<br>inner | | 2 | |
| 4 | 477 837 479 A | window guide | | 2 | |
| 5 | 477 837 493 A | window guide<br>upper | /L | 1 | |
| (5) | 477 837 494 A | window guide<br>upper | /R | 1 | |
| (6) | 477 837 441 A | power windows | /L | 1 | |
| (6) | 477 837 442 A | power windows | /R | 1 | |
| 7 | 171 837 485 | clamp | | 10 | |
| 8 | 477 837 589 | guide rail | | 2 | |
| 10 | 999 217 029 02 | hexagon-head bolt<br>M 6 X 10, SELBSTSICHERND | | 12 | |
| 11 | N 011 652 1 | washer<br>7 X 12 | | 12 | |
| 12 | 321 837 581 | window crank | | 2 | |
| | 01C | black | | | |
| | 90V | brown | | | |
| 13 | 111 837 595 A | desk pad | | 2 | |
| | 01C | black | | | |
| | 90V | brown | | | |
| 14 | 411 837 447 | gasket | | 2 | |
| 16 | 477 837 391 C | cross-arm<br>power window | /L | 1 | |

| Pos | Part Number | Name | Remarks | Qty | Model |
|---|---|---|---|---|---|
| (16) | 477 837 392 C | cross-arm<br>power window | /R | 1 | |
| 17 | 477 959 123 A | engine and transmission | /L | 1 | |
| (17) | 477 959 124 A | engine and transmission | /R | 1 | |
| 18 | N 014 228 4 | countersunk-head screw<br>AM 6 X 12 | | 6 | |
| 18A | 477 837 397 | stop<br>upper | /L | 1 | |
| 18B | 477 837 398 | stop | /R | 1 | |
| 18A | 477 837 397 | stop<br>lower | /R | 1 | |
| 18B | 477 837 398 | stop | /L | 1 | |
| 19 | 477 867 185 | mounting piece | | 1 | |
| | 01C | black | | | |
| | 89S | brown | | | |
| 20 | 477 867 187 | mounting piece | | 1 | |
| | 01C | black | | | |
| | 89S | brown | | | |
| 21 | 477 867 189 | spring clamp | | 4 | |
| 22 | 477 959 622 | tip switch | | 3 | |
| | 01C | black | | | |
| | 89S | brown | | | |
| - | 477 971 160 A | harness<br>dashboard | /LL -83 | 1 | |
| - | 944 612 031 00 | harness<br>dashboard | /LL 84- | 1 | |
| - | 945 612 031 00 | harness<br>dashboard | /RL -83 | 1 | |
| - | 945 612 031 00 | harness<br>dashboard | /RL 84- | 1 | |
| - | 477 971 161 | harness<br>driver's door | | 1 | |
| - | 477 971 162 | harness<br>passenger's door | | 1 | |
| - | 321 919 505 | relay | -83 | 1 | |
| - | 944 615 112 01 | relay | 84- | 1 | |
| - | N 017 121 5 | safety fuse<br>25 A | | 1 | |

- -- E N D -- -

| Model | Year | MG | SG | Illustration | Restrictions | Update | 10:11 | 16.08.2004 | PORSCHE | PET | PORSCHE |
|---|---|---|---|---|---|---|---|---|---|---|---|
| 924 | 85 | 8 | 05 | 805-00 | | 179 | | | | | |

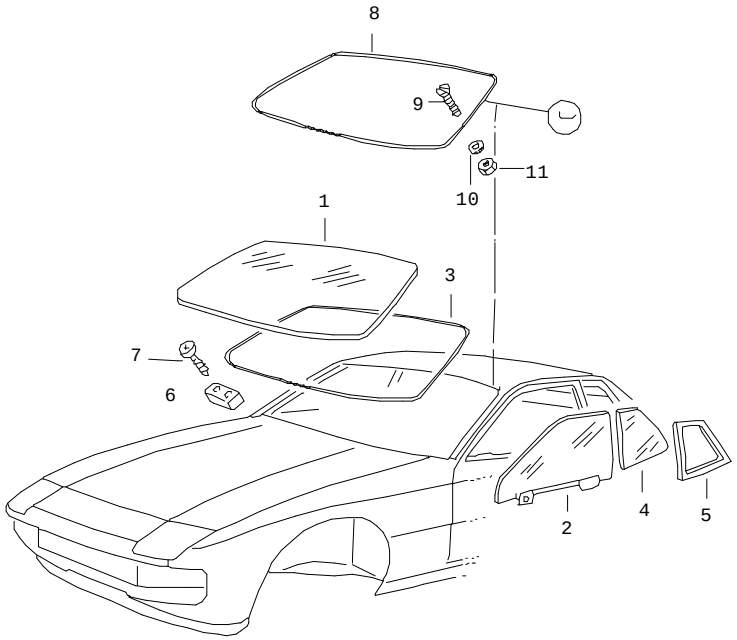


| Pos | Part Number | Name | Remarks | Qty | Model |
|---|---|---|---|---|---|
| | | windows | | | |
| 1 | 477 845 011 D | windscreen<br>clear | | 1 | |
| (1) | 477 845 011 E | windscreen<br>tinted | | 1 | |
| (1) | 477 845 011 F | windscreen<br>tinted<br>upper part: dark green | | 1 | |
| - | 477 845 043 | adhesive plate<br>interior mirror | | 1 | |
| 2 | A 477 845 023 B | door glass<br>clear | /L | 1 | |
| 2 | E 944 542 023 00 | door glass<br>clear | /L | 1 | |
| (2) | 944 542 023 01 | door glass<br>tinted | /L | 1 | |
| (2) | 944 542 024 00 | door glass<br>clear | /R | 1 | |
| (2) | 944 542 024 01 | door glass<br>tinted | /R | 1 | |
| 3 | 477 898 011 A | sealing set<br>windscreen | | 1 | |
| 4 | 477 845 311 | side window<br>clear | /L | 1 | |
| (4) | 477 845 311 A | side window<br>tinted | /L | 1 | |
| (4) | 477 845 312 | side window<br>clear | /R | 1 | |
| (4) | 477 845 312 A | side window<br>tinted | /R | 1 | |
| 5 | 944 557 321 00 | rubber seal<br>side window | /L | 1 | |
| (5) | 944 557 322 00 | rubber seal<br>side window | /R | 1 | |
| 6 | 477 845 613 A | stop | | 2 | |

| Pos | Part Number | Name | Remarks | Qty | Model |
|---|---|---|---|---|---|
| 7 | 900 143 046 07 | tapping screw<br>B 4,8 X 16 | | 4 | 924,TURBO |
| (7) | 900 143 088 07 | tapping screw<br>B 4,8 X 32 | | 4 | GT |
| 8 | E 937 559 031 01 | frame<br>3-part | | 1 | GT |
| 9 | 900 269 044 02 | countersunk-head screw<br>M 4 X 16 | | 10 | GT |
| 10 | 900 025 002 02 | washer<br>A 4,3 | | 10 | GT |
| 11 | N 011 004 6 | hexagon nut<br>M 4 | | 10 | GT |
| | | - -- E N D -- - | | | |

| Pos | Part Number | Name | Remarks | Qty | Model |
|---|---|---|---|---|---|

| Model | Year | MG | SG | Illustration | Restrictions | Update | | | | |
|---|---|---|---|---|---|---|---|---|---|---|
| 924 | 85 | 8 | 06 | 806-00 | | 179 | 10:11 | 16.08.2004 | PORSCHE | PET | PORSCHE |

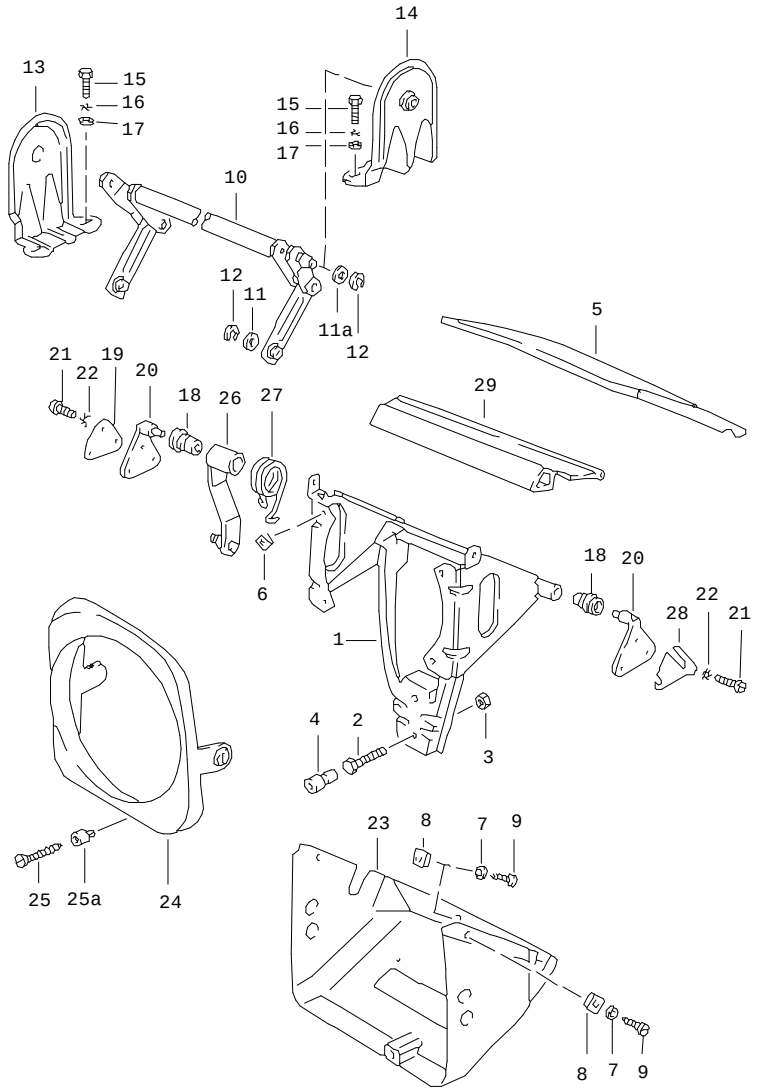


| Pos | Part Number | Name | Remarks | Qty | Model |
|---|---|---|---|---|---|
| | | pop-up headlight | | | |
| 1 | 944 750 605 00 | swivel frame | /L | 1 | |
| (1) | 944 750 606 00 | swivel frame | /R | 1 | |
| 2 | N 010 221 3 | hexagon-head bolt<br>M 6 X 35 | | 2 | |
| 3 | 900 076 010 02 | hexagon nut<br>M 6 | | 2 | |
| 4 | 914 504 319 00 | grommet | | 2 | |
| 5 | 477 805 611 | housing cover | /L | 1 | |
| (5) | 477 805 612 | housing cover | /R | 1 | |
| 6 | 999 507 252 02 | nut<br>B 3,9 X 16,5 | | 8 | |
| 7 | 900 151 028 02 | washer<br>4,1 | | 4 | |
| 8 | N 015 438 1 | speed nut<br>B 3,5 X 16,5 | | 10 | |
| 9 | N 014 086 4 | tapping screw<br>B 3,5 X 9,13 | | 10 | |
| 10 | 477 805 615 | control shaft | | 1 | 924 |
| (10) | 477 805 615 | control shaft | | 1 | TURBO,GT |
| 11 | N 011 525 13 | washer | | 2 | |
| 11A | 477 805 695 | washer | | 1 | |
| 12 | N 012 436 2 | lock washer<br>6 | | 3 | |
| 13 | 477 805 617 | bearing bracket | | 1 | |
| 14 | 477 805 622 | bearing bracket | | 1 | |
| 15 | N 010 215 13 | hexagon-head bolt<br>M 6 X 15 | | 4 | |
| 16 | N 012 105 3 | serrated lock washer<br>A 6,4 | | 4 | |
| 17 | N 011 524 7 | washer<br>A 6,4 | | 4 | |

| Pos | Part Number | Name | Remarks | Qty | Model |
|---|---|---|---|---|---|
| 18 | 477 805 623 | bush | | 4 | |
| 19 | 914 750 169 10 | plate | | 4 | |
| 20 | 914 750 271 10 | bearing bracket | | 4 | |
| 21 | N 010 210 7 | hexagon-head bolt<br>M 6 X 10 | | 12 | |
| 22 | N 012 105 3 | serrated lock washer<br>A 6,4 | | 12 | |
| 23 | 944 750 631 00 | housing | /L | 1 | |
| (23) | 944 750 632 00 | housing | /R | 1 | |
| 24 | 477 805 633 | retaining ring | /L | 1 | |
| (24) | 477 805 634 | retaining ring | /R | 1 | |
| 25 | N 043 979 2 | tapping screw<br>BZ 4,2 X 45 | | 2 | |
| 25A | 477 857 173 | clip | | 2 | |
| 26 | 477 805 651 | lever | | 2 | |
| 27 | 477 805 661 | spring | /L | 1 | |
| (27) | 477 805 662 | spring | /R | 1 | |
| 28 | 477 805 663 | desk pad | | X | |
| 29 | 477 853 363 | cover strip | /L | 1 | |
| (29) | 477 853 364 | cover strip | /R | 1 | |
| | | - -- E N D -- - | | | |

| Model | Year | MG | SG | Illustration | Restrictions | Update | | | | |
|---|---|---|---|---|---|---|---|---|---|---|
| 924 | 85 | 8 | 07 | 807-00 | | 179 | 10:11 | 16.08.2004 | PORSCHE | PET | PORSCHE |

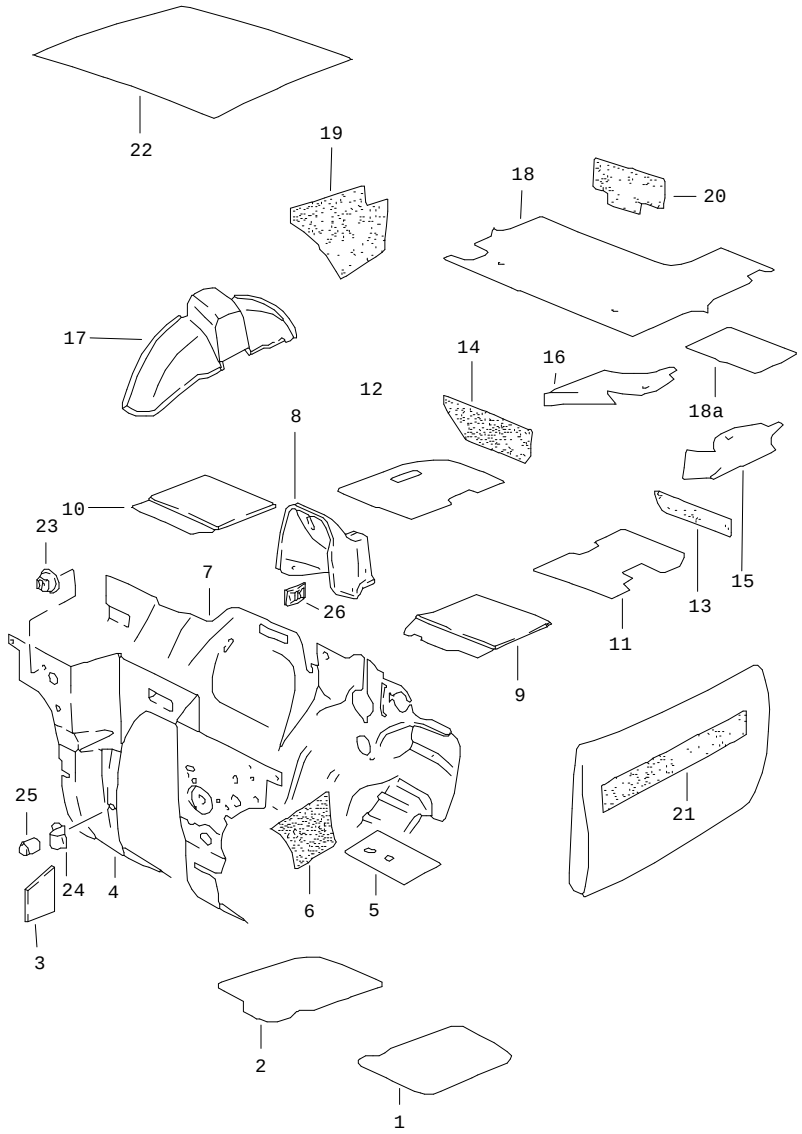


| Pos | Part Number | Name | Remarks | Qty | Model |
|---|---|---|---|---|---|
| | | body<br>sound proofing 1 | | | |
| 1 | 477 863 771 | sound absorber<br>cover | /L | 1 | |
| 2 | 477 863 772 | sound absorber<br>cover | /R | 1 | 924 |
| (2) | 477 863 772 A | sound absorber<br>cover | /R | 1 | TURBO |
| (2) | E 937 556 891 00 | sound absorber<br>cover | /R | 1 | GT |
| 3 | 477 863 871 | heat protection<br>side member | /R | 1 | |
| (4) | 944 556 089 00 | insulation<br>pour engine compartment | /LL | 1 | |
| (4) | 478 863 831 | insulation<br>pour engine compartment<br>F >>92CN4 02197 | /RL | 1 | 924 |
| (4) | E 945 556 089 01 | insulation<br>pour engine compartment | /RL | 1 | 924 |
| (4) | 478 863 831 B | insulation<br>pour engine compartment<br>F >>93CN1 00305<br>F >>93BN7 00450 | /RL | 1 | TURBO/GT |
| (4) | E 945 556 089 01 | insulation<br>pour engine compartment | /RL | 1 | TURBO |
| 5 | 477 863 849 | insulation<br>water drip pan | /L/V | 1 | |
| 6 | 477 863 837 | sound absorber<br>side section | /L -83 | 1 | |
| (6) | 477 863 838 | sound absorber<br>side section | /R -83 | 1 | |
| (6) | 944 556 083 00 | sound absorber<br>side section | /LL/L84- | 1 | |
| (6) | E 944 556 084 00 | sound absorber<br>side section | /LL/R84- | 1 | |
| (6) | 945 556 083 00 | sound absorber<br>side section | /RL/L84- | 1 | |

| Pos | Part Number | Name | Remarks | Qty | Model |
|---|---|---|---|---|---|
| (6) | 945 556 084 00 | sound absorber<br>side section | /RL/R84- | 1 | |
| 7 | E 477 863 855 | insulation<br>firewall<br>F >>92BN4 02267<br>F >>93BN1 00360 | /LL | 1 | 924/TURBO<br>924<br>TURBO |
| 7 | E 477 863 855 E | insulation<br>firewall<br>F 92BN4 02268>>92CN4 02197<br>F 93BN1 00361>>93CN1 00305<br>F 93BN7 00001>>93BN7 00450 | /LL | 1 | 924<br>TURBO<br>GT |
| 7 | E 477 863 855 E | insulation<br>firewall<br>F 92CN4 02198>><br>F 93CN1 00306>> | /LL | 1 | 924<br>TURBO |
| 7 | 477 863 855 F | insulation<br>firewall | /LL | 1 | M 573 |
| 8 | E 477 863 667 A | sound absorber | /V | 1 | |
| 9 | 477 863 775 | sound absorber<br>floor | /LL/L | 1 | |
| (9) | 478 863 775 | sound absorber<br>floor | /RL/L | 1 | |
| 10 | 477 863 776 | sound absorber<br>floor | /LL/R | 1 | |
| (10) | 478 863 776 | sound absorber<br>floor | /RL/R | 1 | |
| 11 | 477 863 773 | sound absorber<br>floor | /L | 1 | |
| 12 | 477 863 774 | sound absorber<br>floor | /R | 1 | |
| 13 | 944 556 085 00 | sound absorber<br>cross member | /L | 1 | |
| (13) | 944 556 086 00 | sound absorber<br>cross member | /R | 1 | |
| 14 | 477 863 845 A | sound absorber<br>heel plate | /L | 1 | |
| (14) | 477 863 846 A | sound absorber<br>heel plate | /R | 1 | |
| 15 | 944 556 777 01 | sound absorber | /L | 1 | |
| 16 | 944 556 778 01 | sound absorber<br>bracket | /R | 1 | |
| (17) | 477 863 885 | insulation<br>wheel housing<br>F >>92CN4 02197<br>F >>93CN1 00305<br>F >>93BN7 00450 | /L | 1 | 924<br>TURBO<br>GT |
| (17) | 944 556 885 00 | sound absorber<br>wheel housing<br>F 92CN4 02198>><br>F 93CN1 00306>> | /L | 1 | 924<br>TURBO |
| (17) | 477 863 886 | sound absorber<br>wheel housing<br>F >>92CN4 02197<br>F >>93CN1 00305<br>F >>93BN7 00450 | /R | 1 | 924<br>TURBO<br>GT |
| 17 | 944 556 886 00 | sound absorber<br>wheel housing<br>F 92CN4 02198>><br>F 93CN1 00306>> | /R | 1 | 924<br>TURBO |
| (18) | 477 863 799 | sound absorber<br>boot floor plate<br>F >>92CN4 02197<br>F >>93CN1 00305<br>F >>93BN7 00450 | | 1 | 924<br>TURBO<br>GT |
| 18 | 944 556 079 00 | sound absorber<br>boot floor plate<br>F 92CN4 02198>><br>F 93CN1 00306>> | | 1 | 924<br>TURBO |
| 18A | 477 863 893 A | sound absorber<br>boot floor plate | | 1 | |
| 19 | 477 863 865 | sound absorber<br>side section | /L | 1 | 924/TURBO |
| (19) | 937 556 865 00 | sound absorber<br>side section | /L | 1 | GT |
| (19) | 477 863 866 | sound absorber<br>side section | /R | 1 | 924/TURBO |
| (19) | 937 556 866 00 | sound absorber<br>side section | /R | 1 | GT |

| Pos | Part Number | Name | Remarks | Qty | Model | Pos | Part Number | Name | Remarks | Qty | Model |
|---|---|---|---|---|---|---|---|---|---|---|---|
| 20 | 477 863 867 | insulation<br>spare-wheel well | | 1 | | | | | | | |
| 21 | 993 556 521 00 | insulation<br>door | | 2 | | | | | | | |
| 22 | 944 556 609 00 | sound absorber<br>roof | | 1 | | | | | | | |
| 23 | 999 049 002 40 | push button | 82- | 13 | | | | | | | |
| 24 | 944 556 849 00 | clip | 82- | 6 | | | | | | | |
| 25 | 999 049 001 40 | plastic nut | 82- | 6 | | | | | | | |
| 26 | N 900 661 01 | clamping washer | | 5 | | | | | | | |
| | | - -- E N D -- - | | | | | | | | | |

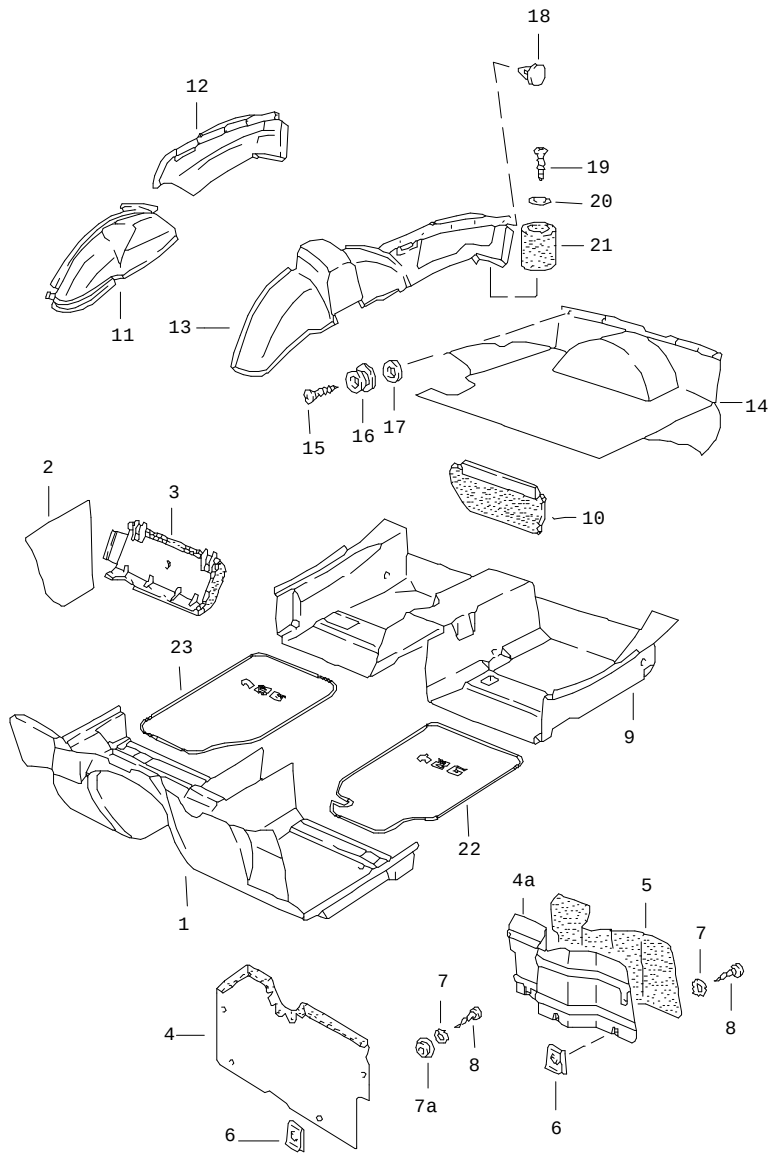


| Pos | Part Number | Name | Remarks | Qty | Model |
|---|---|---|---|---|---|
| | | linings | | | |
| | | F >>92CN4 06384<br>F >>93CN1 00861 | | | 924<br>TURBO |
| 1 | 477 863 703 E | floor mat | /LL/V-80 | 1 | 924 |
| | 43S | black | | | |
| | 83S | beige | | | |
| | 87S | brown | | | |
| (1) | 477 863 703 G | floor mat | /LL/V-80<br>81- | 1 | TURBO<br>924:M 603<br>924 |
| | 43S | black | | | |
| | 83S | beige | | | |
| | 87S | brown | | | |
| (1) | 477 863 703 L | floor mat | /LL/V-80 | 1 | 924:M 573 |
| | 43S | black | | | |
| | 83S | beige | | | |
| | 87S | brown | | | |
| (1) | 477 863 703 M | floor mat | /LL/V<br>81- | 1 | TURBO:M 573<br>924: M 573 |
| | 43S | black | | | |
| | 83S | beige | | | |
| | 87S | brown | | | |
| | 8BR | grey | 82 | | |
| (1) | 478 863 703 C | floor mat | /RL/V-80 | 1 | 924 |
| | 43S | black | | | |
| | 83S | beige | | | |
| | 87S | brown | | | |
| (1) | 478 863 703 G | floor mat | /RL/V<br>-80<br>81- | 1 | TURBO<br>924:M 603<br>924 |

| Pos | Part Number | Name | Remarks | Qty | Model |
|---|---|---|---|---|---|
| | 43S | black | | | |
| | 83S | beige | | | |
| | 87S | brown | | | |
| | 8BR | grey | 82 | | |
| 2 | 477 863 581 A | lining<br>lateral | /L | 1 | |
| | 43S | black | | | |
| | 83S | beige | | | |
| | 87S | brown | | | |
| | 8BR | grey | 82 | | |
| (2) | 477 863 582 A | lining<br>lateral | /R | 1 | |
| | 43S | black | | | |
| | 83S | beige | | | |
| | 87S | brown | | | |
| | 8BR | grey | 82 | | |
| (2) | 477 863 582 B | lining<br>lateral | /LL/R | 1 | M 573 (J) |
| | 43S | black | | | |
| | 83S | beige | | | |
| | 87S | brown | | | |
| | 8BR | grey | 82 | | |
| - | 478 863 767 | carpet<br>foot support | /RL/R | 1 | |
| | 43S | black | | | |
| | 83S | beige | | | |
| | 87S | brown | | | |
| | 8BR | grey | 82 | | |
| - | 478 863 767 A | carpet<br>foot support | /RL/R | 1 | 924 AUT. |

| Pos | Part Number | Name | Remarks | Qty | Model |
|---|---|---|---|---|---|
| | 43S | black | | | |
| | 83S | beige | | | |
| | 87S | brown | | | |
| | 8BR | grey | 82 | | |
| 3 | 477 820 412 | knee protection trim | /LL | 1 | M 573 |
| | 05T | black | | | |
| | 21S | brown | | | |
| 4 | 478 863 711 A | foot support<br>F >>92A04 11805<br>F >>93A01 40313 | /RL/L | 1 | M 573 |
| | 43S | black | | | |
| | 83S | beige | | | |
| | 87S | brown | | | |
| 4A | 478 863 751 | foot support<br>F 92A04 11806>><br>F 93A01 40314>> | /RL/L | 1 | M 573 |
| 5 | 478 863 381 | carpet<br>foot support<br>F 92A04 11806>><br>F 93A01 40314>> | /RL/L | 1 | M 573 |
| | 43S | black | | | |
| | 83S | beige | | | |
| | 87S | brown | | | |
| | 8BR | grey | 82 | | |
| 6 | N 015 458 1 | speed nut | /RL | 5 | M 573 |
| 7 | N 012 130 2 | shake-proof washer<br>A 5,3<br>F >>92A04 11805<br>F >>93A01 40313 | /RL | 5 | M 573 |
| (7) | 900 151 027 02 | washer<br>F 92A04 11806>><br>F 93A01 40314>> | /RL | 5 | M 573 |
| 8 | N 013 968 7 | tapping screw<br>4,8 X 13 | /RL | 5 | M 573 |

| Pos | Part Number | Name | Remarks | Qty | Model |
|---|---|---|---|---|---|
| 9 | 477 863 717 A | floor mat | /LL/H-80 | 1 | 924 |
| | 43S | black | | | |
| | 83S | beige | | | |
| | 87S | brown | | | |
| (9) | 477 863 717 B | floor mat | /LL/H<br>-80<br>81- | 1 | TURBO<br>924:M 603<br>924 |
| | 43S | black | | | |
| | 83S | beige | | | |
| | 87S | brown | | | |
| | 8BR | grey | 82 | | |
| (9) | 478 863 717 A | floor mat | /RL/H-80 | 1 | 924 |
| | 43S | black | | | |
| | 83S | beige | | | |
| | 87S | brown | | | |
| (9) | 478 863 717 B | floor mat | /RL/H<br>-80<br>81- | 1 | TURBO<br>924:M 603<br>924 |
| | 43S | black | | | |
| | 83S | beige | | | |
| | 87S | brown | | | |
| | 8BR | grey | 82 | | |
| (10) | 477 863 571 A | lining<br>heel plate | /L | 1 | |
| | 43S | black | | | |
| | 83S | beige | | | |
| | 87S | brown | | | |
| | 8BR | grey | 82 | | |
| 10 | 477 863 572 A | tension wire<br>heel plate | /R | 1 | |

| Pos | Part Number | Name | Remarks | Qty | Model |
|---|---|---|---|---|---|
| | 43S | black | | | |
| | 83S | beige | | | |
| | 87S | brown | | | |
| | 8BR | grey | 82 | | |
| (11) | A 477 863 067 A | side trim panel<br>wheel housing | /L | 1 | |
| | 43S | black | | | |
| | 83S | beige | | | |
| | 87S | brown | | | |
| | 8BR | grey | 82 | | |
| (11) | 944 555 083 02 | side trim panel<br>wheel housing | /L | 1 | |
| | 43S | black | | | |
| | 83S | beige | | | |
| | 87S | brown | | | |
| | 8BR | grey | 82 | | |
| 11 | A 477 863 068 B | side trim panel<br>wheel housing | /L | 1 | |
| | 43S | black | | | |
| | 83S | beige | | | |
| | 87S | brown | | | |
| | 8BR | grey | 82 | | |
| 11 | 944 555 084 01 | side trim panel<br>F >>92CN4 02197<br>F >>93CN1 00305<br>F >>93BN7 00450<br>wheel housing | /L | 1 | 924<br>TURBO<br>GT |
| | 43S | black | | | |
| | 83S | beige | | | |
| | 87S | brown | | | |
| | 8BR | grey | 82 | | |

| Pos | Part Number | Name | Remarks | Qty | Model |
|---|---|---|---|---|---|
| (12) | A 477 863 083 D | side trim panel | /L | 1 | |
| | 43S | black | | | |
| | 83S | beige | | | |
| | 87S | brown | | | |
| | 8BR | grey | 82 | | |
| (12) | 944 555 083 02 | side trim panel | /L | 1 | |
| | 43S | black | | | |
| | 83S | beige | | | |
| | 87S | brown | | | |
| | 8BR | grey | 82 | | |
| 12 | A 477 863 084 B | side trim panel | /R | 1 | |
| | 43S | black | | | |
| | 83S | beige | | | |
| | 87S | brown | | | |
| | 8BR | grey | 82 | | |
| 12 | 944 555 084 01 | side trim panel<br>F >>92CN4 02197<br>F >>93CN1 00305<br>F >>93BN7 00450 | /R | 1 | 924<br>TURBO<br>GT |
| | 43S | black | | | |
| | 83S | beige | | | |
| | 87S | brown | | | |
| | 8BR | grey | 82 | | |
| (13) | 944 555 083 01 | side trim panel | /L | 1 | |
| | 43S | black | | | |
| | 83S | beige | | | |
| | 87S | brown | | | |
| 13 | 944 555 084 01 | side trim panel<br>F 92CN4 02198>><br>F 93CN1 00306>> | /R | 1 | 924<br>TURBO |

| Pos | Part Number | Name | Remarks | Qty | Model |
|---|---|---|---|---|---|
| | 43S | black | | | |
| | 83S | beige | | | |
| | 87S | brown | | | |
| 14 | 477 863 463 K | lining<br>boot floor plate | | 1 | 924 |
| | 43S | black | | | |
| | 83S | beige | | | |
| | 87S | brown | | | |
| (14) | 944 555 063 06 | lining<br>boot floor plate | | 1 | 924 |
| | 43S | black | | | |
| | 83S | beige | | | |
| | 87S | brown | | | |
| (14) | 477 863 463 J | lining<br>boot floor plate<br>with collapsible tire<br>F >>92CN4 02197<br>F >>93CN1 00305<br>F >>93BN7 00450 | | 1 | 924<br>TURBO<br>GT |
| | 43S | black | | | |
| | 83S | beige | | | |
| | 87S | brown | | | |
| | 8BR | grey | 82 | | |
| (14) | 944 555 063 01 | boot floor lining<br>boot floor plate<br>with collapsible tire<br>F 92CN4 02198>><br>F 93CN1 00306>> | | 1 | 924<br>TURBO |
| | 43S | black | | | |
| | 83S | beige | | | |
| | 87S | brown | | | |
| 15 | N 013 957 5 | tapping screw<br>B 3,5 X 9,5 | | 6 | |

| Pos | Part Number | Name | Remarks | Qty | Model |
|---|---|---|---|---|---|
| 16 | 968 555 901 00 | set of fastening parts | | 6 | |
| 17 | 900 151 027 02 | washer<br>5,3 | | 6 | |
| 18 | 477 863 747 | clip | | 12 | |
| | 01C | black | | | |
| | 90V | brown | | | |
| | 83S | beige | | | |
| 19 | 900 143 064 07 | tapping screw<br>B 3,5 X 25 | | 2 | |
| 20 | N 011 521 3 | washer<br>A 3,7 X 8 | | 2 | |
| 21 | 999 703 176 40 | stop | | 2 | |
| 22 | 477 863 913 | floor mat<br>with<br>logo | /LL/L | 1 | |
| | 43S | black | | | |
| | 87S | brown | | | |
| 23 | 477 863 914 | floor mat<br>with<br>logo | /LL/R | 1 | |
| | 43S | black | | | |
| | 87S | brown | | | |
| | | - -- E N D -- - | | | |

| Pos | Part Number | Name | Remarks | Qty | Model |
|---|---|---|---|---|---|

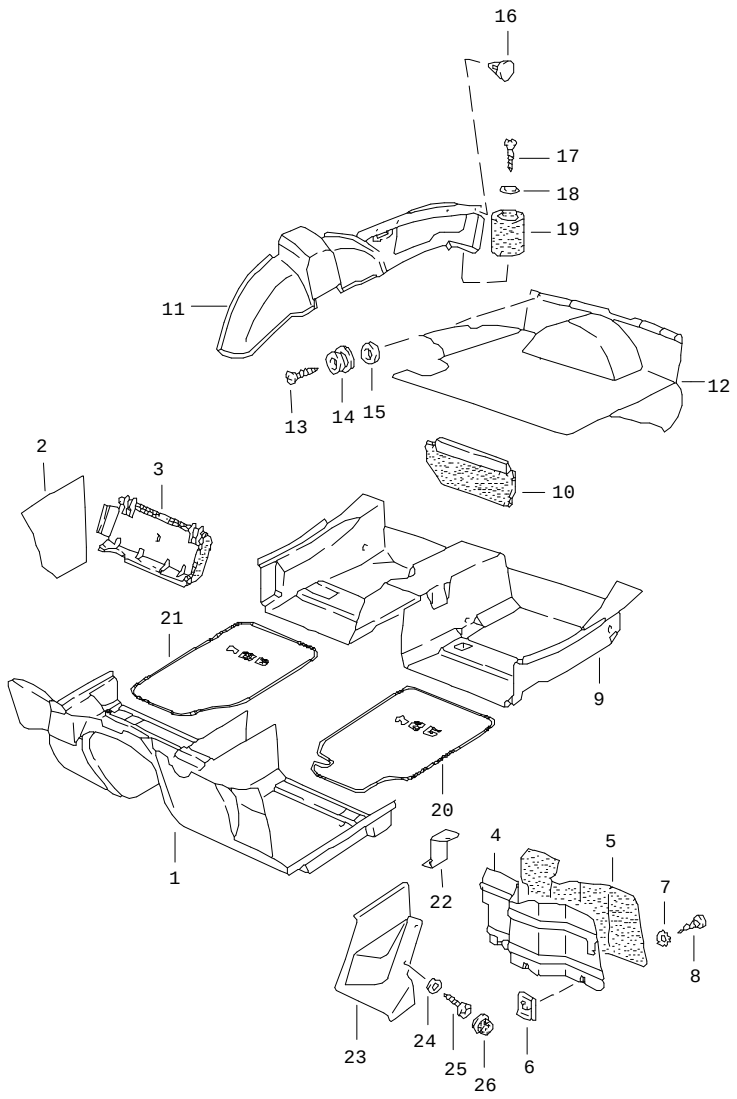


| Pos | Part Number | Name | Remarks | Qty | Model |
|---|---|---|---|---|---|
| | | linings | | | |
| | | 92 CN406385--<br>93 CN100862-- | | | 924<br>TURBO |
| | | 92 CN407431--<br>93 CN100933-- | | | 924<br>TURBO |
| | | 92 CN407431--<br>93 CN100933-- | | | 924<br>TURBO |
| 1 | 477 863 703 G | floor mat | /LL/V | 1 | |
| | 3BF | black | | | |
| | 1NF | beige | -82 | | |
| | 8NF | brown | | | |
| | 4BF | grey | 83- | | |
| | 3FF | grey-beige | 83- | | |
| (1) | 477 863 703 M | floor mat | /LL/V | 1 | M 573 |
| | 3BF | black | | | |
| | 1NF | beige | -82 | | |
| | 8NF | brown | | | |
| | 4BF | grey | 83- | | |
| | 3FF | grey-beige | 83- | | |
| (1) | 478 863 703 G | floor mat | /RL/V | 1 | |
| | 3BF | black | | | |
| | 1NF | beige | -82 | | |
| | 8NF | brown | | | |
| | 4BF | grey | 83- | | |
| | 3FF | grey-beige | 83- | | |
| (2) | 477 863 581 A | lining<br>lateral | /L -83 | 1 | |
| | 3BF | black | | | |
| | 1NF | beige | -82 | | |

| Pos | Part Number | Name | Remarks | Qty | Model |
|---|---|---|---|---|---|
| | 8NF | brown | | | |
| | 4BF | grey | 83- | | |
| | 3FF | grey-beige | 83- | | |
| 2 | 477 863 582 A | lining<br>lateral | /R | 1 | |
| | 3BF | black | | | |
| | 1NF | beige | -82 | | |
| | 8NF | brown | | | |
| | 4BF | grey | 83- | | |
| | 3FF | grey-beige | 83- | | |
| (2) | 477 863 582 B | lining<br>lateral | /LL/R | 1 | M 573 |
| | 3BF | black | | | |
| | 1NF | beige | -82 | | |
| | 8NF | brown | | | |
| | 4BF | grey | 83- | | |
| | 3FF | grey-beige | 83- | | |
| (2) | 945 555 081 00 | lining | /L 84- | 1 | |
| | 3BF | black | | | |
| | 8NF | brown | | | |
| | 4BF | grey | | | |
| | 3FF | grey-beige | | | |
| - | 478 863 767 | carpet<br>foot support | /RL/R | 1 | |
| | 3BF | black | | | |
| | 1NF | beige | -82 | | |
| | 8NF | brown | | | |
| | 4BF | grey | 83- | | |
| | 3FF | grey-beige | 83- | | |

| Pos | Part Number | Name | Remarks | Qty | Model |
|---|---|---|---|---|---|
| - | 478 863 767 A | carpet<br>foot support | /RL/R | 1 | AUT. |
| | 3BF | black | | | |
| | 1NF | beige | -82 | | |
| | 8NF | brown | | | |
| | 4BF | grey | 83- | | |
| | 3FF | grey-beige | 83- | | |
| 3 | 477 820 412 | knee protection trim | /LL | 1 | M 573 |
| | 05T | black | -82 | | |
| | 21S | brown | -82 | | |
| | 1DB | black | 83- | | |
| | 4RB | brown | 83- | | |
| 4 | 478 863 751 | foot support | /RL/L | 1 | M 573 |
| 5 | 478 863 381 | carpet<br>foot support | /RL/L | 1 | M 573 |
| | 3BF | black | | | |
| | 1NF | beige | -82 | | |
| | 8NF | brown | | | |
| | 4BF | grey | 83- | | |
| | 3FF | grey-beige | 83- | | |
| 6 | N 015 458 1 | speed nut | /RL | 5 | M 573 |
| 7 | 900 151 027 02 | washer | /RL | 5 | M 573 |
| 8 | N 013 968 7 | tapping screw<br>4,8 X 13 | /RL | 5 | M 573 |
| 9 | 477 863 717 B | floor mat | /LL/H | 1 | |
| | 3BF | black | | | |
| | 1NF | beige | -82 | | |
| | 8NF | brown | | | |
| | 4BF | grey | 83- | | |

| Pos | Part Number | Name | Remarks | Qty | Model |
|---|---|---|---|---|---|
| | 3FF | grey-beige | 83- | | |
| (9) | 478 863 717 B | floor mat | /RL/H | 1 | |
| | 3BF | black | | | |
| | 1NF | beige | -82 | | |
| | 8NF | brown | | | |
| | 4BF | grey | 83- | | |
| | 3FF | grey-beige | 83- | | |
| (10) | 477 863 571 A | lining<br>heel plate | /L | 1 | |
| | 3BF | black | | | |
| | 1NF | beige | -82 | | |
| | 8NF | brown | | | |
| | 4BF | grey | 83- | | |
| | 3FF | grey-beige | 83- | | |
| 10 | 477 863 572 A | lining<br>heel plate | /R | 1 | |
| | 3BF | black | | | |
| | 1NF | beige | -82 | | |
| | 8NF | brown | | | |
| | 4BF | grey | 83- | | |
| | 3FF | grey-beige | 83- | | |
| (11) | 944 555 083 01 | side trim panel | /L -83 | 1 | |
| | 3BF | black | | | |
| | 1NF | beige | -82 | | |
| | 8NF | brown | | | |
| | 4BF | grey | 83- | | |
| | 3FF | grey-beige | 83- | | |
| 11 | 944 555 084 01 | side trim panel | /R | 1 | |
| | 3BF | black | | | |
| | 1NF | beige | -82 | | |
| | 8NF | brown | | | |
| | 4BF | grey | 83- | | |
| | 3FF | grey-beige | 83- | | |
| 11 | 944 555 083 02 | side trim panel | /L 84- | 1 | |
| | 3BF | black | | | |
| | 4BF | grey | | | |
| | 8NF | brown | | | |
| | 3FF | grey-beige | | | |
| 11 | 944 555 083 03 | side trim panel | /L 84- | 1 | (AUS) |
| | 3BF | black | | | |
| | 4BF | grey | | | |
| | 8NF | brown | | | |
| | 3FF | grey-beige | | | |
| (11) | 944 555 084 02 | side trim panel | /R 84- | 1 | (AUS) |
| | 3BF | black | | | |
| | 4BF | grey | | | |
| | 8NF | brown | | | |
| | 3FF | grey-beige | | | |
| (12) | 944 555 063 06 | lining<br>boot floor plate | -84 | 1 | 924 |
| | 3BF | black | | | |
| | 4BF | grey | | | |
| | 8NF | brown | | | |
| | 3FF | grey-beige | | | |
| (12) | 945 555 063 04 | boot floor lining | 85 | 1 | |
| | 3BF | black | | | |

| Pos | Part Number | Name | Remarks | Qty | Model |
|---|---|---|---|---|---|
| | 4BF | grey | | | |
| | 8NF | brown | | | |
| | 3FF | grey-beige | | | |
| 12 | 944 555 063 01 | boot floor lining<br>boot floor plate<br>with collapsible tire | -83 | 1 | |
| | 3BF | black | | | |
| | 1NF | beige | -82 | | |
| | 8NF | brown | | | |
| | 4BF | grey | 83 | | |
| | 3FF | grey-beige | 83 | | |
| 12 | 944 555 063 07 | boot floor lining<br>boot floor plate<br>with collapsible tire | 84 | 1 | |
| | 3BF | black | | | |
| | 4BF | grey | | | |
| | 8NF | brown | | | |
| | 3FF | grey-beige | | | |
| (12) | 944 555 063 03 | boot floor lining<br>with collapsible tire | 85 | 1 | |
| | 3BF | black | | | |
| | 4BF | grey | | | |
| | 8NF | brown | | | |
| | 3FF | grey-beige | | | |
| 12 | 944 555 063 02 | boot floor lining | 83- | 1 | (GB) |
| | 3BF | black | | | |
| | 4BF | grey | | | |
| | 8NF | brown | | | |
| | 3FF | grey-beige | | | |

| Pos | Part Number | Name | Remarks | Qty | Model |
|---|---|---|---|---|---|
| 13 | N 013 957 5 | tapping screw<br>B 3,5 X 9,5 | | 6 | |
| 14 | 968 555 901 00 | set of fastening parts | | 6 | |
| 15 | 900 151 027 02 | washer<br>5,3 | | 6 | |
| 16 | 477 863 747 | clip | | 12 | |
| | 01C | black | | | |
| | 90V | brown | | | |
| | 83S | beige | -82 | | |
| | 4BF | grey | 83- | | |
| | 3FF | grey-beige | 83- | | |
| 17 | 900 143 064 07 | tapping screw<br>B 3,5 X 25 | | 2 | |
| 18 | N 011 521 3 | washer<br>A 3,7 X 8 | | 2 | |
| 19 | 999 703 176 40 | stop | | 2 | |
| 20 | 477 863 913 | floor mat<br>with<br>logo<br>924 | /LL/L | 1 | |
| | 3BF | black | | | |
| | 8NF | brown | | | |
| 21 | 477 863 914 | floor mat<br>with<br>logo<br>924 | /LL/R | 1 | |
| | 3BF | black | | | |
| | 8NF | brown | | | |
| 22 | 944 555 263 00 | bracket | /LL | 1 | |
| (22) | 945 555 263 00 | bracket | /RL | 1 | |
| 23 | 944 555 061 00 | lining | /LL | 1 | |
| | 01C | black | | | |

| Pos | Part Number | Name | Remarks | Qty | Model | Pos | Part Number | Name | Remarks | Qty | Model |
|---|---|---|---|---|---|---|---|---|---|---|---|
| 24 | 900 151 028 02 | washer<br>4,1 X 12 X 0,8 | | 2 | | | | | | | |
| 25 | 999 450 003 02 | tapping screw<br>B 3,9 X 16 | | 2 | | | | | | | |
| 26 | 311 867 169 | cap | | 2 | | | | | | | |
| | 01C | black | | | | | | | | | |
| | | - -- E N D -- - | | | | | | | | | |

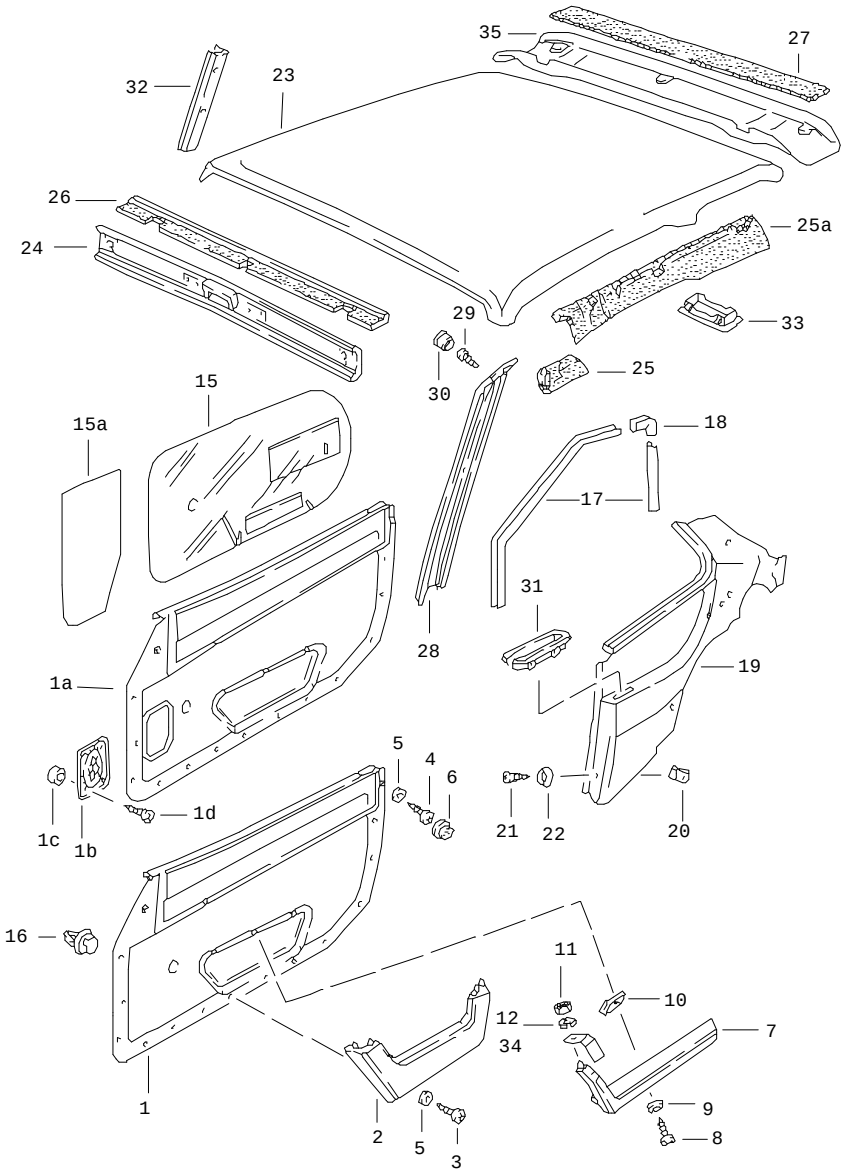


| Pos | Part Number | Name | Remarks | Qty | Model |
|---|---|---|---|---|---|
| | | linings | | | |
| (1) | 477 867 011 D | door trim panel<br>power windows<br>manually adjustable<br>leatherette | /L | 1 | |
| | DF9 | black | -80 | | 924 |
| | DG1 | brown | -80 | | 924 |
| | DG2 | beige/brown | -80 | | 924 |
| 1 | 477 867 012 D | door trim panel<br>power windows<br>manually adjustable<br>leatherette | /R | 1 | |
| | DF9 | black | -80 | | 924 |
| | DG1 | brown | -80 | | 924 |
| | DG2 | beige/brown | -80 | | 924 |
| (1) | 477 867 011 D | door trim panel<br>leatherette/<br>cloth<br>tartan cloth | /L | 1 | |
| | EN4 | black/<br>red-blue | 81 | | |
| | EP4 | black/<br>green-blue | 81 | | |
| | EP5 | brown/<br>brown-beige | 81 | | |
| 1 | 477 867 012 D | door trim panel<br>leatherette/<br>cloth<br>tartan cloth | /R | 1 | |
| | EN4 | black/<br>red-blue | 81 | | |
| | EP4 | black/<br>green-blue | 81 | | |
| | EP5 | brown/<br>brown-beige | 81 | | |

| Pos | Part Number | Name | Remarks | Qty | Model |
|---|---|---|---|---|---|
| (1) | 477 867 011 G | door trim panel<br>power windows<br>manually adjustable<br>leatherette | /L 81-82 | 1 | |
| | DF9 | black | | | |
| | DG1 | brown | | | |
| | DG2 | beige/brown | | | |
| (1) | 477 867 012 G | door trim panel<br>power windows<br>manually adjustable<br>leatherette | /R 81-82 | 1 | |
| | DF9 | black | | | |
| | DG1 | brown | | | |
| | DG2 | beige/brown | | | |
| (1) | 477 867 011 G | door trim panel<br>leatherette/<br>checker board velour | /L 81-82 | 1 | |
| | FE5 | black/<br>grey/black | | | |
| | FE6 | brown/<br>beige/brown | | | |
| (1) | 477 867 012 G | door trim panel<br>leatherette/<br>checker board velour | /R 81-82 | 1 | |
| | FE5 | black/<br>grey/black | | | |
| | FE6 | brown/<br>beige/brown | | | |
| (1) | 477 867 011 G | door trim panel<br>leatherette/<br>pin stripe velour | /L 81-82 | 1 | |
| | GF5 | black/<br>black-red | | | |
| | GM5 | black/<br>black-white | 81 | | 924 |

| Pos | Part Number | Name | Remarks | Qty | Model |
|---|---|---|---|---|---|
| (1) | 477 867 012 G | door trim panel<br>leatherette/<br>pin stripe velour | /R 81-82 | 1 | |
| | GF5 | black/<br>black-red | | | |
| | GM5 | black/<br>black-white | 81 | | 924 |
| (1A) | 477 867 011 M | door trim panel<br>power windows<br>manually adjustable<br>leatherette | /L 83- | 1 | |
| | DF9 | black<br>F >>92DN4 02148<br>F >>93DN1 00189 | | | 924<br>TURBO |
| | KZ7 | black<br>F 92DN4 02149>><br>F 93DN1 00190>> | | | 924<br>TURBO |
| 1A | 477 867 012 M | door trim panel<br>power windows<br>manually adjustable<br>leatherette | /R 83- | 1 | |
| | DF9 | black<br>F >>92DN4 02148<br>F >>93DN1 00189 | | | 924<br>TURBO |
| | KZ7 | black<br>F 92DN4 02149>><br>F 93DN1 00190>> | | | 924<br>TURBO |
| (1A) | 477 867 011 Q | door trim panel<br>power windows<br>manually adjustable<br>leatherette | /L | 1 | |
| | DG1 | brown<br>F >>92DN4 02148<br>F >>93DN1 00189 | | | 924<br>TURBO |
| | JS3 | grey-beige<br>F >>92DN4 02148<br>F >>93DN1 00189 | | | 924<br>TURBO |
| | KZ8 | brown<br>F 92DN4 02149>><br>F 93DN1 00190>> | | | 924<br>TURBO |

| Pos | Part Number | Name | Remarks | Qty | Model |
|---|---|---|---|---|---|
| | KZ9 | grey-beige<br>F 92DN4 02149>><br>F 93DN1 00190>> | | | 924<br>TURBO |
| (1A) | 477 867 012 Q | door trim panel<br>power windows<br>manually adjustable<br>leatherette | /R | 1 | |
| | DG1 | brown<br>F >>92DN4 02148<br>F >>93DN1 00189 | | | 924<br>TURBO |
| | JS3 | grey-beige<br>F >>92DN4 02148<br>F >>93DN1 00189 | | | 924<br>TURBO |
| | KZ8 | brown<br>F 92DN4 02149>><br>F 93DN1 00190>> | | | 924<br>TURBO |
| | KZ9 | grey-beige<br>F 92DN4 02149>><br>F 93DN1 00190>> | | | 924<br>TURBO |
| (1) | 477 867 011 E | door trim panel<br>power windows<br>electrically adjustable<br>leatherette | /LL/L-80 | 1 | |
| | DF9 | black | | | |
| | DG1 | brown | | | |
| | DG2 | beige/brown | | | |
| (1) | 477 867 012 E | door trim panel<br>power windows<br>electrically adjustable<br>leatherette | /LL/R-80 | 1 | |
| | DF9 | black | | | |
| | DG1 | brown | | | |
| | DG2 | beige/brown | | | |
| (1) | 478 867 011 E | door trim panel<br>power windows<br>electrically adjustable<br>leatherette | /RL/L-80 | 1 | |
| | DF9 | black | | | |
| | DG1 | brown | | | |
| | DG2 | beige/brown | | | |
| (1) | 478 867 012 E | door trim panel<br>power windows<br>electrically adjustable<br>leatherette | /RL/R-80 | 1 | |
| | DF9 | black | | | |
| | DG1 | brown | | | |
| | DG2 | beige/brown | | | |
| (1) | 477 867 011 E | door trim panel<br>leatherette/<br>cloth<br>tartan cloth | /LL/L-80 | 1 | |
| | EN4 | black/<br>red-blue | | | |
| | EP4 | black/<br>green-blue | | | |
| | EP5 | brown/<br>brown-beige | | | |
| (1) | 477 867 012 E | door trim panel<br>leatherette/<br>cloth<br>tartan cloth | /LL/R-80 | 1 | |
| | EN4 | black/<br>red-blue | | | |
| | EP4 | black/<br>green-blue | | | |
| | EP5 | brown/<br>brown-beige | | | |
| (1) | 478 867 011 E | door trim panel<br>leatherette/<br>cloth<br>tartan cloth | /RL/L-80 | 1 | |
| | EN4 | black/<br>red-blue | | | |
| | EP4 | black/<br>green-blue | | | |

| Pos | Part Number | Name | Remarks | Qty | Model |
|---|---|---|---|---|---|
| | EP5 | brown/<br>brown-beige | | | |
| (1) | 478 867 012 E | door trim panel<br>leatherette/<br>cloth<br>tartan cloth | /RL/R-80 | 1 | |
| | EN4 | black/<br>red-blue | | | |
| | EP4 | black/<br>green-blue | | | |
| | EP5 | brown/<br>brown-beige | | | |
| (1) | 477 867 011 E | door trim panel<br>leatherette/<br>checker board velour | /LL/L-80 | 1 | |
| | FE5 | black/<br>grey/black | | | |
| | FE6 | brown/<br>beige/brown | | | |
| (1) | 477 867 012 E | door trim panel<br>leatherette/<br>checker board velour | /LL/R-80 | 1 | |
| | FE5 | black/<br>grey/black | | | |
| | FE6 | brown/<br>beige/brown | | | |
| (1) | 478 867 011 E | door trim panel<br>leatherette/<br>checker board velour | /RL/L-80 | 1 | |
| | FE5 | black/<br>grey/black | | | |
| | FE6 | brown/<br>beige/brown | | | |
| (1) | 478 867 012 E | door trim panel<br>leatherette/<br>checker board velour | /RL/R-80 | 1 | |
| | FE5 | black/<br>grey/black | | | |
| | FE6 | brown/<br>beige/brown | | | |
| (1) | 477 867 011 E | door trim panel<br>leatherette/<br>cloth<br>FISCHGRAET | /LL/L-80 | 1 | |
| | EH5 | black/<br>orange | | | |
| | EH6 | brown/<br>brown-beige | | | |
| (1) | 477 867 012 E | door trim panel<br>leatherette/<br>cloth<br>FISCHGRAET | /LL/R-80 | 1 | |
| | EH5 | black/<br>orange | | | |
| | EH6 | brown/<br>brown-beige | | | |
| (1) | 478 867 011 E | door trim panel<br>leatherette/<br>cloth<br>FISCHGRAET | /RL/L-80 | 1 | |
| | EH5 | black/<br>orange | | | |
| | EH6 | brown/<br>brown-beige | | | |
| (1) | 478 867 012 E | door trim panel<br>leatherette/<br>cloth<br>FISCHGRAET | /RL/R-80 | 1 | |
| | EH5 | black/<br>orange | | | |
| | EH6 | brown/<br>brown-beige | | | |
| (1) | 477 867 011 H | door trim panel<br>left<br>power windows<br>electrically adjustable<br>leatherette | /LL81-82 | 1 | |
| | DF9 | black | | | |

| Pos | Part Number | Name | Remarks | Qty | Model |
|---|---|---|---|---|---|
| | DG1 | brown | | | |
| | DG2 | beige/brown | | | |
| (1) | 477 867 012 H | door trim panel<br>right<br>power windows<br>electrically adjustable<br>leatherette | /LL81-82 | 1 | |
| | DF9 | black | | | |
| | DG1 | brown | | | |
| | DG2 | beige/brown | | | |
| (1) | 478 867 011 G | door trim panel<br>left<br>power windows<br>electrically adjustable<br>leatherette | /RL81-82 | 1 | |
| | DF9 | black | | | |
| | DG1 | brown | | | |
| | DG2 | beige/brown | | | |
| (1) | 478 867 012 G | door trim panel<br>right<br>power windows<br>electrically adjustable<br>leatherette | /RL81-82 | 1 | |
| | DF9 | black | | | |
| | DG1 | brown | | | |
| | DG2 | beige/brown | | | |
| (1) | 477 867 011 H | door trim panel<br>left<br>leatherette/<br>checker board velour | /LL81-82 | 1 | |
| | FE5 | black/<br>grey/black | | | |
| | FE6 | brown/<br>beige/brown | | | |
| (1) | 477 867 012 H | door trim panel<br>right<br>leatherette/<br>checker board velour | /LL81-82 | 1 | |
| | FE5 | black/<br>grey/black | | | |
| | FE6 | brown/<br>beige/brown | | | |
| (1) | 478 867 011 G | door trim panel<br>left<br>leatherette/<br>checker board velour | /RL81-82 | 1 | |
| | FE5 | black/<br>grey/black | | | |
| | FE6 | brown/<br>beige/brown | | | |
| (1) | 478 867 012 G | door trim panel<br>right<br>leatherette/<br>checker board velour | /RL81-82 | 1 | |
| | FE5 | black/<br>grey/black | | | |
| | FE6 | brown/<br>beige/brown | | | |
| (1) | 477 867 011 H | door trim panel<br>left<br>leatherette/<br>pin stripe velour | /LL81-82 | 1 | |
| | GF5 | black/<br>black-red | | | |
| | GM5 | black/<br>black-white | 81 | | 924 |
| (1) | 477 867 012 H | door trim panel<br>right<br>leatherette/<br>pin stripe velour | /LL81-82 | 1 | |
| | GF5 | black/<br>black-red | | | |
| | GM5 | black/<br>black-white | 81 | | 924 |

| Pos | Part Number | Name | Remarks | Qty | Model |
|---|---|---|---|---|---|
| (1) | 478 867 011 G | door trim panel<br>left<br>leatherette/<br>pin stripe velour | /RL81-82 | 1 | |
| | GF5 | black/<br>black-red | | | |
| | GM5 | black/<br>black-white | 81 | | 924 |
| (1) | 478 867 012 G | door trim panel<br>right<br>leatherette/<br>pin stripe velour | /RL81-82 | 1 | |
| | GF5 | black/<br>black-red | | | |
| | GM5 | black/<br>black-white | 81 | | 924 |
| (1) | 477 867 011 H | door trim panel<br>left<br>leatherette/<br>stripe design | /LL81-82 | 1 | |
| | HT1 | black/<br>silver-black | 82 | | JUBI |
| (1) | 477 867 012 H | door trim panel<br>right<br>leatherette/<br>stripe design | /LL81-82 | 1 | |
| | HT1 | black/<br>silver-black | 82 | | JUBI |
| (1) | 478 867 011 G | door trim panel<br>left<br>leatherette/<br>stripe design | /RL81-82 | 1 | |
| | HT1 | black/<br>silver-black | 82 | | JUBI |
| (1) | 478 867 012 G | door trim panel<br>right<br>leatherette/<br>stripe design | /RL81-82 | 1 | |
| | HT1 | black/<br>silver-black | 82 | | JUBI |
| (1A) | 477 867 011 N | door trim panel<br>power windows<br>electrically adjustable<br>leatherette | /LL/L83- | 1 | |
| | DF9 | black<br>F >>92DN4 02148<br>F >>93DN1 00189 | | | 924<br>TURBO |
| | KZ7 | black<br>F 92DN4 02149>><br>F 93DN1 00190>> | | | 924<br>TURBO |
| 1A | 477 867 012 N | door trim panel<br>power windows<br>electrically adjustable<br>leatherette | /LL/R83- | 1 | |
| | DF9 | black<br>F >>92DN4 02148<br>F >>93DN1 00189 | | | 924<br>TURBO |
| | KZ7 | black<br>F 92DN4 02149>><br>F 93DN1 00190>> | | | 924<br>TURBO |
| (1A) | 478 867 011 M | door trim panel<br>power windows<br>electrically adjustable<br>leatherette | /RL/L83- | 1 | |
| | DF9 | black<br>F >>92DN4 02148<br>F >>93DN1 00189 | | | 924<br>TURBO |
| | KZ7 | black<br>F 92DN4 02149>><br>F 93DN1 00190>> | | | 924<br>TURBO |
| 1A | 478 867 012 M | door trim panel<br>power windows<br>electrically adjustable<br>leatherette | /RL/R83- | 1 | |
| | DF9 | black<br>F >>92DN4 02148<br>F >>93DN1 00189 | | | 924<br>TURBO |
| | KZ7 | black<br>F 92DN4 02149>><br>F 93DN1 00190>> | | | 924<br>TURBO |

| Pos | Part Number | Name | Remarks | Qty | Model |
|---|---|---|---|---|---|
| (1A) | 477 867 011 N | door trim panel<br>leatherette<br>pin stripe velour | /LL/L83- | 1 | |
| | GM5 | black/ | | | |
| 1A | 477 867 012 N | door trim panel<br>leatherette<br>pin stripe velour | /LL/R83- | 1 | |
| | GM5 | black/ | | | |
| (1A) | 478 867 011 M | door trim panel<br>leatherette<br>pin stripe velour | /RL/L83- | 1 | |
| | GM5 | black/ | | | |
| 1A | 478 867 012 M | door trim panel<br>leatherette<br>pin stripe velour | /RL/R83- | 1 | |
| | GM5 | black/ | | | |
| (1A) | 477 867 011 N | door trim panel<br>black-white<br>leatherette/<br>checker board velour | /LL/L83- | 1 | |
| | JR9 | black/<br>light grey-black | | | |
| 1A | 477 867 012 N | door trim panel<br>black-white<br>leatherette/<br>checker board velour | /LL/R83- | 1 | |
| | JR9 | black/<br>light grey-black | | | |
| (1A) | 478 867 011 M | door trim panel<br>black-white<br>leatherette/<br>checker board velour | /RL/L83- | 1 | |
| | JR9 | black/<br>light grey-black | | | |
| 1A | 478 867 012 M | door trim panel<br>black-white<br>leatherette/<br>checker board velour | /RL/R83- | 1 | |

| Pos | Part Number | Name | Remarks | Qty | Model |
|---|---|---|---|---|---|
| | JR9 | black/<br>light grey-black | | | |
| (1A) | 477 867 011 R | door trim panel<br>power windows<br>electrically adjustable<br>leatherette | /LL/L | 1 | |
| | DG1 | brown<br>F >>92DN4 02148<br>F >>93DN1 00189 | | | 924<br>TURBO |
| | JS3 | brown/grey-beige<br>F >>92DN4 02148<br>F >>93DN1 00189 | | | 924<br>TURBO |
| | KZ8 | brown<br>F 92DN4 02149>><br>F 93DN1 00190>> | | | 924<br>TURBO |
| | KZ9 | brown/grey-beige<br>F 92DN4 02149>><br>F 93DN1 00190>> | | | 924<br>TURBO |
| 1A | 477 867 012 R | door trim panel<br>power windows<br>electrically adjustable<br>leatherette | /LL/R | 1 | |
| | DG1 | brown<br>F >>92DN4 02148<br>F >>93DN1 00189 | | | 924<br>TURBO |
| | JS3 | brown/grey-beige<br>F >>92DN4 02148<br>F >>93DN1 00189 | | | 924<br>TURBO |
| | KZ8 | brown<br>F 92DN4 02149>><br>F 93DN1 00190>> | | | 924<br>TURBO |
| | KZ9 | brown/grey-beige<br>F 92DN4 02149>><br>F 93DN1 00190>> | | | 924<br>TURBO |
| (1A) | 478 867 011 N | door trim panel<br>power windows<br>electrically adjustable<br>leatherette | /RL/L | 1 | |
| | DG1 | brown<br>F >>92DN4 02148<br>F >>93DN1 00189 | | | 924<br>TURBO |

| Pos | Part Number | Name | Remarks | Qty | Model |
|---|---|---|---|---|---|
| | JS3 | brown/grey-beige<br>F >>92DN4 02148<br>F >>93DN1 00189 | | | 924<br>TURBO |
| | KZ8 | brown<br>F 92DN4 02149>><br>F 93DN1 00190>> | | | 924<br>TURBO |
| | KZ9 | brown/grey-beige<br>F 92DN4 02149>><br>F 93DN1 00190>> | | | 924<br>TURBO |
| 1A | 478 867 012 N | door trim panel<br>power windows<br>electrically adjustable<br>leatherette | /RL/R | 1 | |
| | DG1 | brown<br>F >>92DN4 02148<br>F >>93DN1 00189 | | | 924<br>TURBO |
| | JS3 | brown/grey-beige<br>F >>92DN4 02148<br>F >>93DN1 00189 | | | 924<br>TURBO |
| | KZ8 | brown<br>F 92DN4 02149>><br>F 93DN1 00190>> | | | 924<br>TURBO |
| | KZ9 | brown/grey-beige<br>F 92DN4 02149>><br>F 93DN1 00190>> | | | 924<br>TURBO |
| (1A) | 477 867 011 R | door trim panel<br>leatherette/<br>checker board velour | /LL/L | 1 | |
| | JS1 | brown/<br>brown-grey | | | |
| 1A | 477 867 012 R | door trim panel<br>leatherette/<br>checker board velour | /LL/R | 1 | |
| | JS1 | brown/<br>brown-grey | | | |
| (1A) | 478 867 011 N | door trim panel<br>leatherette/<br>checker board velour | /RL/L | 1 | |
| | JS1 | brown/<br>brown-grey | | | |

| Pos | Part Number | Name | Remarks | Qty | Model |
|---|---|---|---|---|---|
| 1A | 478 867 012 N | door trim panel<br>leatherette/<br>checker board velour | /RL/R | 1 | |
| | JS1 | brown/<br>brown-grey | | | |
| (1A) | 477 867 011 R | door trim panel<br>leatherette/<br>pin stripe velour | /LL/L | 1 | |
| | JS2 | brown/<br>grey-beige-white | | | |
| | JS5 | brown/<br>brown-beige | | | |
| 1A | 477 867 012 R | door trim panel<br>leatherette/<br>pin stripe velour | /LL/R | 1 | |
| | JS2 | brown/<br>grey-beige-white | | | |
| | JS5 | brown/<br>brown-beige | | | |
| (1A) | 478 867 011 N | door trim panel<br>leatherette/<br>pin stripe velour | /RL/L | 1 | |
| | JS2 | brown/<br>grey-beige-white | | | |
| | JS5 | brown/<br>brown-beige | | | |
| 1A | 478 867 012 N | door trim panel<br>leatherette/<br>pin stripe velour | /RL/R | 1 | |
| | JS2 | brown/<br>grey-beige-white | | | |
| | JS5 | brown/<br>brown-beige | | | |
| 1B | 477 867 081 | cover<br>loudspeaker | 83- | 2 | |
| | 01C | black | | | |

| Pos | Part Number | Name | Remarks | Qty | Model |
|---|---|---|---|---|---|
| | 89S | brown<br>F >>92DN4 03529<br>F >>93DN1 00239 | | | 924<br>TURBO |
| 1B | 477 867 081 A | cover<br>loudspeaker | | 2 | |
| | 4RB | brown<br>F 92DN4 03530>><br>F 93DN1 00240>> | | | 924<br>TURBO |
| 1C | 477 035 375 | bush | 83- | 8 | |
| 1D | N 014 091 4 | tapping screw<br>B 3,9 X 16 | 83- | 8 | |
| - | N 100 472 01 | speed nut | 83- | 8 | |
| - | 999 507 071 00 | speed nut | | 2 | |
| (2) | 477 867 033 A | package box | /L | 1 | |
| | 43S | black<br>F >>92CN4 06384<br>F >>93CN1 00861 | | | 924<br>TURBO |
| | 3BF | black<br>F 92CN4 06385>>92DN4 02148<br>F 93CN1 00862>>93DN1 00189 | | | 924<br>TURBO |
| | 83S | beige<br>F >>92CN4 07430<br>F >>93CN1 00932 | | | 924<br>TURBO |
| | 1NF | beige<br>F 92CN4 07431>><br>F 93CN1 00932>> | -82 | | 924<br>TURBO |
| | 87S | brown<br>F >>92CN4 07430<br>F >>93CN1 00932 | | | 924<br>TURBO |
| | 8NF | brown<br>F 92CN4 07431>>92DN4 02148<br>F 93CN1 00932>>93DN1 00189 | | | 924<br>TURBO |
| | 8BR | grey | 82 | | |
| | 3FF | grey-beige<br>F >>92DN4 02148<br>F >>93DN1 00189 | | | 924<br>TURBO |
| | 1DB | black<br>F 92DN4 02149>><br>F 93DN1 00190>> | | | 924<br>TURBO |
| | 4RB | brown<br>F 92DN4 02149>><br>F 93DN1 00190>> | | | 924<br>TURBO |
| | 1DX | grey-beige<br>F 92DN4 02149>><br>F 93DN1 00190>> | | | 924<br>TURBO |
| 2 | 477 867 034 A | package box | /R | 1 | |
| | 43S | black<br>F >>92CN4 06384<br>F >>93CN1 00861 | | | 924<br>TURBO |
| | 3BF | black<br>F 92CN4 06385>>92DN4 02148<br>F 93CN1 00862>>93DN1 00189 | | | 924<br>TURBO |
| | 83S | beige<br>F >>92CN4 07430<br>F >>93CN1 00932 | | | 924<br>TURBO |
| | 1NF | beige<br>F 92CN4 07431>><br>F 93CN1 00932>> | -82 | | 924<br>TURBO |
| | 87S | brown<br>F >>92CN4 07430<br>F >>93CN1 00932 | | | 924<br>TURBO |
| | 8NF | brown<br>F 92CN4 07431>>92DN4 02148<br>F 93CN1 00932>>93DN1 00189 | | | 924<br>TURBO |
| | 8BR | grey | 82 | | |
| | 3FF | grey-beige<br>F >>92DN4 02148<br>F >>93DN1 00189 | | | 924<br>TURBO |
| | 1DB | black<br>F 92DN4 02149>><br>F 93DN1 00190>> | | | 924<br>TURBO |
| | 4RB | brown<br>F 92DN4 02149>><br>F 93DN1 00190>> | | | 924<br>TURBO |

| Pos | Part Number | Name | Remarks | Qty | Model |
|---|---|---|---|---|---|
| | 1DX | grey-beige<br>F 92DN4 02149>><br>F 93DN1 00190>> | | | 924<br>TURBO |
| 3 | N 013 962 2 | tapping screw<br>B 3,9 X 16 | | 6 | |
| 4 | 311 867 167 | tapping screw<br>4,2 | | 4 | |
| 5 | 900 151 028 02 | washer<br>4,3 | | 10 | |
| 6 | 311 867 169 | cap | | 4 | |
| | 01C | black | | | |
| | 90V | brown | | | |
| (7) | 477 867 171 | armrest | /L | 1 | |
| | 041 | black | | | |
| | 89S | brown | | | |
| | 5FX | grey-beige | 83- | | |
| 7 | 477 867 172 | armrest | /R | 1 | |
| | 041 | black | | | |
| | 89S | brown | | | |
| | 5FX | grey-beige | 83- | | |
| 8 | 900 143 046 02 | tapping screw<br>B 4,8 X 16 | | 6 | |
| 9 | N 012 222 4 | spring washer<br>B 5 | | 6 | |
| 10 | 999 591 722 02 | speed nut<br>B 4,8 X 19,8 | | 6 | |
| 11 | 900 910 010 09 | lock nut<br>M 6 | | 2 | |
| 12 | N 011 524 7 | washer<br>6 | | 2 | |
| (15) | 477 867 177 D | sealing film | /L | 1 | |
| 15 | 477 867 178 D | sealing film<br>door trim panel | /R | 1 | |
| (15A) | 477 867 179 | sealing film | /L 83- | 1 | |
| 15A | 477 867 180 | sealing film<br>loudspeaker | /R 83- | 1 | |
| 16 | 823 867 299 | clip | | 25 | |
| 17 | 477 867 367 | piping<br>door frame | | 4 | |
| 18 | 477 867 371 | end piece | | 2 | |
| (19) | 477 867 421 | side trim panel | /L | 1 | |
| | 05T | black | | | |
| | 21S | brown | | | |
| 19 | 477 867 422 A | side trim panel<br>F >>92CN4 02197<br>F >>93CN1 00305 | /R | 1 | 924<br>TURBO |
| | 05T | black | | | |
| | 21S | brown | | | |
| (19) | 944 555 021 01 | side trim panel | /L | 1 | |
| | 05T | black | -82 | | |
| | 21S | brown | -82 | | |
| | 1DB | black | 83- | | |
| | 4RB | brown | 83- | | |
| (19) | 944 555 022 01 | side trim panel<br>F 92CN4 02198>><br>F 93CN1 00306>> | /R | 1 | 924<br>TURBO |
| | 05T | black | -82 | | |
| | 21S | brown | -82 | | |
| | 1DB | black | 83- | | |
| | 4RB | brown | 83- | | |
| - | 111 857 785 | plug | | 2 | |
| - | 111 857 795 | cover disc | | 2 | |
| 20 | N 015 438 1 | speed nut<br>B 3,5 X 16,5 | | 2 | |

| Pos | Part Number | Name | Remarks | Qty | Model |
|---|---|---|---|---|---|
| 21 | N 014 087 5 | rais. counters. h. tap. s.<br>B 3,5 X 16 | | 4 | |
| 22 | N 011 578 1 | cone washer<br>3,7 | | 4 | |
| 23 | 477 867 503 | rooflining | | 1 | |
| | 05T | black | | | |
| | 21S | brown<br>F >>92DN4 02148<br>F >>93DN1 00189 | | | 924<br>TURBO |
| | 4RB | brown<br>F 92DN4 02149>><br>F 93DN1 00190>> | | | 924<br>TURBO |
| (23) | 477 867 501 A | rooflining | -83 | 1 | M 650 |
| | 05T | black | | | |
| | 21S | brown<br>F >>92DN4 02148<br>F >>93DN1 00189 | | | 924<br>TURBO |
| | 4RB | brown<br>F 92DN4 02149>><br>F 93DN1 00190>> | | | 924<br>TURBO |
| (23) | A 944 555 051 01 | rooflining | 84- | 1 | M 650 |
| | 05T | black | | | |
| | 4RB | brown | | | |
| (23) | 944 555 519 00 | rooflining | 84- | 1 | M 650 |
| | 05T | black | | | |
| | 4RB | brown | | | |
| - | 477 867 543 | bow | | 3 | |
| 24 | 477 867 511 | lining<br>roof frame | /V | 1 | |
| | 05T | black | -82 | | |
| | 21S | brown | -82 | | |
| | 1DB | black | 83- | | |
| | 4RB | brown | 83- | | |

| Pos | Part Number | Name | Remarks | Qty | Model |
|---|---|---|---|---|---|
| 25A | E 944 555 115 00 | roof frame padding | /L | 1 | |
| (25) | A 944 555 116 00 | roof frame padding | /R -83 | 1 | |
| (25A) | 944 555 116 00 | roof frame padding | /R | 1 | |
| 26 | 477 867 531 | roof frame padding | /V -83 | 1 | M 650 |
| (26) | 944 564 531 01 | roof frame padding | /V 84- | 1 | M 650 |
| 27 | 477 867 533 | roof frame padding | /H -83 | 1 | M 650 |
| 28 | 477 867 553 A | lining<br>windscreen frame part | /L | 1 | |
| | 05T | black | -82 | | |
| | 21S | brown | -82 | | |
| | 1DB | black | 83- | | |
| | 4RB | brown | 83- | | |
| (28) | 477 867 554 A | lining<br>windscreen frame part | /R | 1 | |
| | 05T | black | -82 | | |
| | 21S | brown | -82 | | |
| | 1DB | black | 83- | | |
| | 4RB | brown | 83- | | |
| 29 | N 013 962 2 | tapping screw<br>B 3,9 X 16 | | 6 | |
| 30 | 914 552 233 10 | filler piece | | 6 | |
| | 01C | black | | | |
| | 90V | brown | | | |
| 31 | 477 867 653 | rose | | 2 | |
| 32 | 477 867 655 | lining<br>centre pillar | /L | 1 | |
| | 05T | black | | | |
| | 21S | brown<br>F >>92DN4 02148<br>F >>93DN1 00189 | | | 924<br>TURBO |

| Pos | Part Number | Name | Remarks | Qty | Model |
|---|---|---|---|---|---|
| | 4RB | brown<br>F 92DN4 02149>><br>F 93DN1 00190>> | | | 924<br>TURBO |
| (32) | 477 867 656 | lining<br>centre pillar | /R | 1 | |
| | 05T | black | | | |
| | 21S | brown<br>F >>92DN4 02148<br>F >>93DN1 00189 | | | 924<br>TURBO |
| | 4RB | brown<br>F 92DN4 02149>><br>F 93DN1 00190>> | | | 924<br>TURBO |
| 33 | 477 867 923 A | cap | | 2 | |
| | 01C | black | | | |
| | 89S | brown | | | |
| (34) | 477 867 153 | fastening hook | /L | 1 | |
| 34 | 477 867 154 | fastening hook<br>armrest | /R | 1 | |
| 35 | 944 555 941 00 | lining<br>roof frame | /H 84- | 1 | M 650 |
| | 05T | black | | | |
| | 4RB | brown | | | |
| | | - -- E N D -- - | | | |

| Pos | Part Number | Name | Remarks | Qty | Model |
|---|---|---|---|---|---|

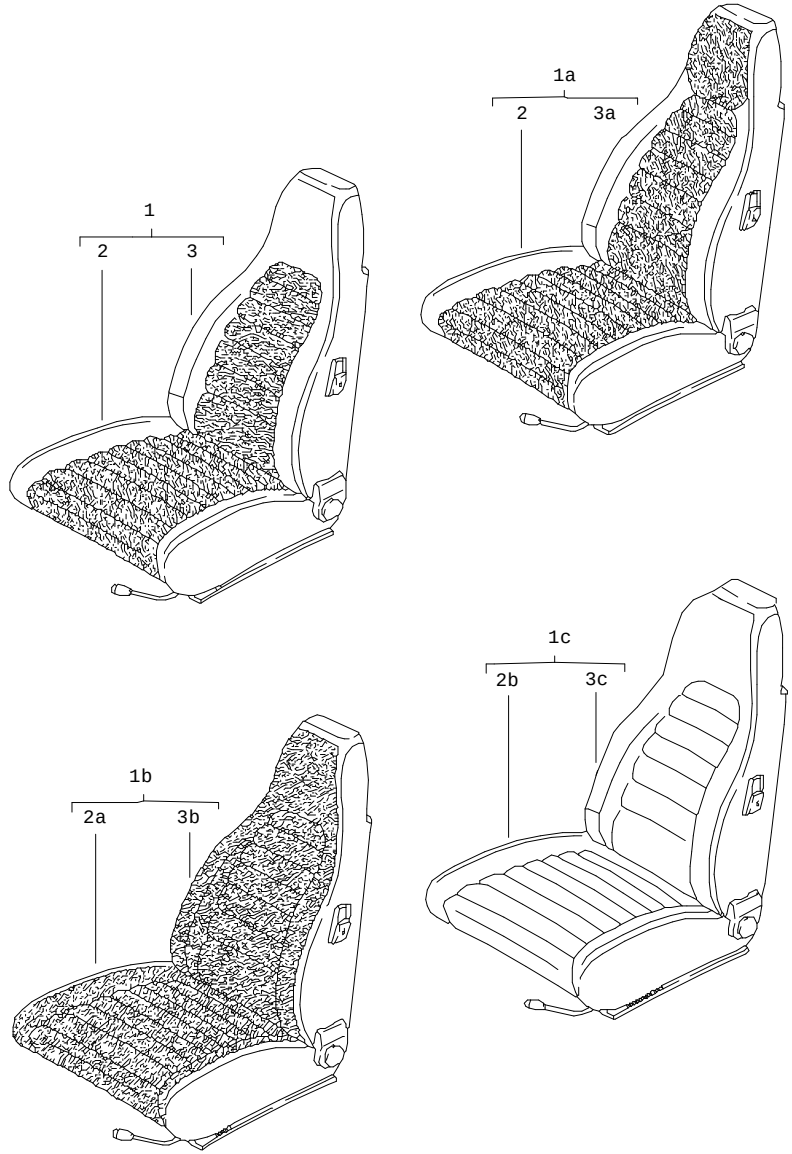


| Pos | Part Number | Name | Remarks | Qty | Model |
|---|---|---|---|---|---|
| | | front seat<br>complete<br>and<br>cover | | | |
| 1 | A 477 881 021 E | front seat<br>leatherette/<br>centre part in cloth<br>FISCHGRAET | /L | 1 | |
| | DC2 | beige/<br>brown-beige | -80 | | |
| | DC5 | brown/<br>brown-beige | -80 | | |
| | DC8 | black/<br>orange | -80 | | |
| (1) | A 477 881 022 E | front seat<br>leatherette/<br>centre part in cloth<br>FISCHGRAET | /R | 1 | |
| | DC2 | beige/<br>brown-beige | -80 | | |
| | DC5 | brown/<br>brown-beige | -80 | | |
| | DC8 | black/<br>orange | -80 | | |
| 1 | A 477 881 021 E | front seat<br>leatherette/<br>centre part in cloth<br>pin stripe velour | /L | 1 | |
| | FD5 | black/<br>black-white<br>F >>92DN4 02148<br>F >>93DN1 00189 | | | 924<br>TURBO |
| | FD6 | brown/<br>brown-beige<br>F >>92DN4 02148<br>F >>93DN1 00189 | | | 924<br>TURBO |
| | FD7 | beige/<br>brown-beige | -82 | | |

| Pos | Part Number | Name | Remarks | Qty | Model |
|---|---|---|---|---|---|
| | JR7 | grey-beige/<br>grey-beige-white<br>F >>92DN4 02148<br>F >>93DN1 00189 | | | 924<br>TURBO |
| | JN1 | black/<br>black-white<br>F 92DN4 02149>><br>F 93DN1 00190>> | | | 924<br>TURBO |
| | JN2 | brown/<br>brown-beige<br>F 92DN4 02149>><br>F 93DN1 00190>> | | | 924<br>TURBO |
| | LD4 | grey-beige/<br>grey-beige-white<br>F 92DN4 02149>><br>F 93DN1 00190>> | | | 924<br>TURBO |
| (1) | A 477 881 022 E | front seat<br>leatherette/<br>centre part in cloth<br>pin stripe velour | /R | 1 | |
| | FD5 | black/<br>black-white<br>F >>92DN4 02148<br>F >>93DN1 00189 | | | 924<br>TURBO |
| | FD6 | brown/<br>brown-beige<br>F >>92DN4 02148<br>F >>93DN1 00189 | | | 924<br>TURBO |
| | FD7 | beige/<br>brown-beige | -82 | | |
| | JR7 | grey-beige/<br>grey-beige-white<br>F >>92DN4 02148<br>F >>93DN1 00189 | | | 924<br>TURBO |
| | JN1 | black/<br>black-white<br>F 92DN4 02149>><br>F 93DN1 00190>> | | | 924<br>TURBO |
| | JN2 | brown/<br>brown-beige<br>F 92DN4 02149>><br>F 93DN1 00190>> | | | 924<br>TURBO |

| Pos | Part Number | Name | Remarks | Qty | Model |
|---|---|---|---|---|---|
| | LD4 | grey-beige/<br>grey-beige-white<br>F 92DN4 02149>><br>F 93DN1 00190>> | | | 924<br>TURBO |
| 1A | A 477 881 021 E | front seat<br>leatherette/<br>centre part<br>and<br>head rest<br>tartan cloth | /L | 1 | |
| | EN3 | black/<br>red-blue | | | |
| | EP1 | black/<br>green-blue | | | |
| | EP2 | brown/<br>brown-beige | | | |
| | EP3 | beige/<br>brown-beige | | | |
| (1A) | A 477 881 022 E | front seat<br>leatherette/<br>centre part<br>and<br>head rest<br>tartan cloth | /R | 1 | |
| | EN3 | black/<br>red-blue | | | |
| | EP1 | black/<br>green-blue | | | |
| | EP2 | brown/<br>brown-beige | | | |
| | EP3 | beige/<br>brown-beige | | | |
| 1A | A 477 881 021 E | front seat<br>leatherette/<br>centre part<br>and<br>head rest<br>checker board velour | /L | 1 | |
| | FD8 | black/<br>grey/black | -82 | | |

| Pos | Part Number | Name | Remarks | Qty | Model |
|---|---|---|---|---|---|
| | FD9 | brown/<br>beige/brown | -82 | | |
| | FE1 | beige/<br>beige/brown | -82 | | |
| | JR4 | black/<br>light grey-black<br>F >>92DN4 02148<br>F >>93DN1 00189 | | | 924<br>TURBO |
| | JR5 | brown/<br>brown-grey<br>F >>92DN4 02148<br>F >>93DN1 00189 | | | 924<br>TURBO |
| | JR6 | grey-beige/<br>brown-grey<br>F >>92DN4 02148<br>F >>93DN1 00189 | | | 924<br>TURBO |
| | LD5 | black/<br>light grey-black<br>F 92DN4 02149>><br>F 93DN1 00190>> | | | 924<br>TURBO |
| | LD6 | brown/<br>brown-grey<br>F 92DN4 02149>><br>F 93DN1 00190>> | | | 924<br>TURBO |
| | LD7 | grey-beige/<br>brown-grey<br>F 92DN4 02149>><br>F 93DN1 00190>> | | | 924<br>TURBO |
| (1A) | A 477 881 022 E | front seat<br>leatherette/<br>centre part<br>and<br>head rest<br>checker board velour | /R | 1 | |
| | FD8 | black/<br>grey/black | -82 | | |
| | FD9 | brown/<br>beige/brown | -82 | | |
| | FE1 | beige/<br>beige/brown | -82 | | |
| | JR4 | black/<br>light grey-black<br>F >>92DN4 02148<br>F >>93DN1 00189 | | | 924<br>TURBO |
| | JR5 | brown/<br>brown-grey<br>F >>92DN4 02148<br>F >>93DN1 00189 | | | 924<br>TURBO |
| | JR6 | grey-beige/<br>brown-grey<br>F >>92DN4 02148<br>F >>93DN1 00189 | | | 924<br>TURBO |
| | LD5 | black/<br>light grey-black<br>F 92DN4 02149>><br>F 93DN1 00190>> | | | 924<br>TURBO |
| | LD6 | brown/<br>brown-grey<br>F 92DN4 02149>><br>F 93DN1 00190>> | | | 924<br>TURBO |
| | LD7 | grey-beige/<br>brown-grey<br>F 92DN4 02149>><br>F 93DN1 00190>> | | | 924<br>TURBO |
| 1A | A 477 881 021 E | front seat<br>leatherette/<br>centre part<br>and<br>head rest<br>pin stripe velour | /L | 1 | |
| | GM4 | black/<br>black-white<br>piping<br>white<br>special model<br>"LE MANS" | 81 | | |
| | KU8 | black/<br>black-red<br>piping<br>black<br>special model | 82 | | 924 (CH) |

| Pos | Part Number | Name | Remarks | Qty | Model |
|---|---|---|---|---|---|
| (1A) | A 477 881 022 E | front seat<br>leatherette/<br>centre part<br>and<br>head rest<br>pin stripe velour | /R | 1 | |
| | GM4 | black/<br>black-white<br>piping<br>white<br>special model<br>"LE MANS" | 81 | | |
| | KU8 | black/<br>black-red<br>piping<br>black<br>special model | 82 | | 924 (CH) |
| 1A | A 477 881 021 E | front seat<br>leatherette/<br>centre part<br>and<br>head rest<br>porsche lettering cloth | /L | 1 | |
| | LR6 | black/black | 84 | | |
| | LR7 | brown/brown | 84 | | |
| | LR8 | grey-beige/grey-beige | 84 | | |
| | PX1 | black/black | 85 | | |
| | PX3 | brown/brown | 85 | | |
| | QD8 | grey-beige/grey-beige | 85 | | |
| (1A) | A 477 881 022 E | front seat<br>leatherette/<br>centre part<br>and<br>head rest<br>porsche lettering cloth | /R | 1 | |
| | LR6 | black/black | 84 | | |
| | LR7 | brown/brown | 84 | | |
| | LR8 | grey-beige/grey-beige | 84 | | |
| | PX1 | black/black | 85 | | |
| | PX3 | brown/brown | 85 | | |
| | QD8 | grey-beige/grey-beige | 85 | | |
| 1B | A 477 881 021 E | front seat<br>leatherette/<br>seat and backrest surface<br>berber cloth | /L | 1 | |
| | GE9 | black/<br>grey/black<br>F >>92DN4 02148<br>F >>93DN1 00189 | | | 924<br>TURBO |
| | FE3 | brown/<br>beige/brown<br>F >>92DN4 02148<br>F >>93DN1 00189 | | | 924<br>TURBO |
| | FE4 | beige/<br>beige/brown | -82 | | |
| | JR8 | grey-beige/<br>grey-beige-grey<br>F >>92DN4 02148<br>F >>93DN1 00189 | | | 924<br>TURBO |
| | JM3 | black/<br>grey/black<br>F 92DN4 02149>><br>F 93DN1 00190>> | | | 924<br>TURBO |
| | JM4 | brown/<br>beige/brown<br>F 92DN4 02149>><br>F 93DN1 00190>> | | | 924<br>TURBO |
| | JM9 | grey-beige/<br>grey-beige-grey<br>F 92DN4 02149>><br>F 93DN1 00190>> | | | 924<br>TURBO |
| (1B) | A 477 881 022 E | front seat<br>leatherette/<br>seat and backrest surface<br>berber cloth | /R | 1 | |
| | GE9 | black/<br>grey/black<br>F >>92DN4 02148<br>F >>93DN1 00189 | | | 924<br>TURBO |

| Pos | Part Number | Name | Remarks | Qty | Model |
|---|---|---|---|---|---|
| | FE3 | brown/<br>beige/brown<br>F >>92DN4 02148<br>F >>93DN1 00189 | | | <br><br>924<br>TURBO |
| | FE4 | beige/<br>beige/brown | -82 | | |
| | JR8 | grey-beige/<br>grey-beige-grey<br>F >>92DN4 02148<br>F >>93DN1 00189 | | | <br><br>924<br>TURBO |
| | JM3 | black/<br>grey/black<br>F 92DN4 02149>><br>F 93DN1 00190>> | | | <br><br>924<br>TURBO |
| | JM4 | brown/<br>beige/brown<br>F 92DN4 02149>><br>F 93DN1 00190>> | | | <br><br>924<br>TURBO |
| | JM9 | grey-beige/<br>grey-beige-grey<br>F 92DN4 02149>><br>F 93DN1 00190>> | | | <br><br>924<br>TURBO |
| 1B | A 477 881 021 L | front seat<br>leatherette/<br>seat and backrest surface<br>porsche lettering cloth | /L 84- | 1 | |
| | LR1 | black/black | 84 | | |
| | LR2 | brown/brown | 84 | | |
| | LR3 | grey-beige/grey-beige | 84 | | |
| | PX2 | black/black | 85 | | |
| | PX4 | brown/brown | 85 | | |
| | QD9 | grey-beige/grey-beige | 85 | | |
| | NC3 | black/<br>anthracite-burgundy<br>special model | 84 | | TURBO (I) |
| (1B) | A 477 881 022 L | front seat<br>leatherette/<br>seat and backrest surface<br>porsche lettering cloth | /R 84- | 1 | |
| | LR1 | black/black | 84 | | |
| | LR2 | brown/brown | 84 | | |
| | LR3 | grey-beige/grey-beige | 84 | | |
| | PX2 | black/black | 85 | | |
| | PX4 | brown/brown | 85 | | |
| | QD9 | grey-beige/grey-beige | 85 | | |
| | NC3 | black/<br>anthracite-burgundy<br>special model | 84 | | TURBO (I) |
| 1C | A 477 881 021 F | front seat<br>leatherette | /L | 1 | |
| | DD2 | beige | -82 | | |
| | DD4 | brown<br>F >>92DN4 02148<br>F >>93DN1 00189 | | | <br>924<br>TURBO |
| | DD6 | black<br>F >>92DN4 02148<br>F >>93DN1 00189 | | | <br>924<br>TURBO |
| | 4FK | grey-beige<br>F >>92DN4 02148<br>F >>93DN1 00189 | | | <br>924<br>TURBO |
| | MC4 | brown<br>F 92DN4 02149>><br>F 93DN1 00190>> | | | <br>924<br>TURBO |
| | MC5 | grey-beige<br>F 92DN4 02149>><br>F 93DN1 00190>> | | | <br>924<br>TURBO |
| (1C) | A 477 881 022 F | front seat<br>leatherette | /R | 1 | |
| | DD2 | beige | -82 | | |
| | DD4 | brown<br>F >>92DN4 02148<br>F >>93DN1 00189 | | | <br>924<br>TURBO |
| | DD6 | black<br>F >>92DN4 02148<br>F >>93DN1 00189 | | | <br>924<br>TURBO |

| Pos | Part Number | Name | Remarks | Qty | Model |
|---|---|---|---|---|---|
| | 4FK | grey-beige<br>F >>92DN4 02148<br>F >>93DN1 00189 | | | 924<br>TURBO |
| | MC4 | brown<br>F 92DN4 02149>><br>F 93DN1 00190>> | | | 924<br>TURBO |
| | MC5 | grey-beige<br>F 92DN4 02149>><br>F 93DN1 00190>> | | | 924<br>TURBO |
| (1C) | A 477 881 021 H | front seat<br>leather | /L -80 | 1 | |
| | 1AJ | black | | | |
| | 2NF | beige | | | |
| | 3NG | brown | | | |
| (1C) | A 477 881 022 H | front seat<br>leather | /R -80 | 1 | |
| | 1AJ | black | | | |
| | 2NF | beige | | | |
| | 3NG | brown | | | |
| 1C | A 477 881 021 K | front seat<br>leatherette/<br>centre part<br>leather<br>not<br>perforated | /L | 1 | |
| | QE1 | black/black<br>F 92DN4 02149>>92EN4 01588 | | | |
| | QE2 | brown/brown<br>F 92DN4 02149>>92EN4 01588 | | | |
| | QE3 | grey-beige/grey-beige<br>F 92DN4 02149>>92EN4 01588 | | | |
| (1C) | A 477 881 022 K | front seat<br>leatherette/<br>centre part<br>leather<br>not<br>perforated | /R | 1 | |
| | QE1 | black/black<br>F 92DN4 02149>>92EN4 01588 | | | |
| | QE2 | brown/brown<br>F 92DN4 02149>>92EN4 01588 | | | |
| | QE3 | grey-beige/grey-beige<br>F 92DN4 02149>>92EN4 01588 | | | |
| 1C | A 477 881 021 K | front seat<br>leatherette/<br>centre part<br>leather<br>perforated | /L | 1 | |
| | JN3 | black/black<br>F 92EN4 01589>> | | | |
| | JN4 | brown/brown<br>F 92EN4 01589>> | | | |
| | JN5 | grey-beige/grey-beige<br>F 92EN4 01589>> | | | |
| (1C) | A 477 881 022 K | front seat<br>leatherette/<br>centre part<br>leather<br>perforated | /R | 1 | |
| | JN3 | black/black<br>F 92EN4 01589>> | | | |
| | JN4 | brown/brown<br>F 92EN4 01589>> | | | |
| | JN5 | grey-beige/grey-beige<br>F 92EN4 01589>> | | | |
| 2 | A 911 521 037 58 | cover for cushion<br>leatherette/<br>centre part<br>FISCHGRAET<br>F >>92FN4 01323 | /L | 1 | |
| | DC2 | beige/<br>brown-beige | -80 | | |
| | DC5 | brown/<br>brown-beige | -80 | | |
| | DC8 | black/<br>orange | -80 | | |

| Pos | Part Number | Name | Remarks | Qty | Model |
|---|---|---|---|---|---|
| (2) | A 911 521 038 58 | cover for cushion<br>leatherette/<br>centre part<br>FISCHGRAET<br>F >>92FN4 01323 | /R | 1 | |
| | DC2 | beige/<br>brown-beige | -80 | | |
| | DC5 | brown/<br>brown-beige | -80 | | |
| | DC8 | black/<br>orange | -80 | | |
| 2 | A 911 521 037 58 | cover for cushion<br>leatherette/<br>centre part<br>pin stripe velour<br>F >>92FN4 01323 | /L | 1 | |
| | FD5 | black/<br>black-white<br>F >>92DN4 02148<br>F >>93DN1 00189 | | | 924<br>TURBO |
| | FD6 | brown/<br>brown-beige<br>F >>92DN4 02148<br>F >>93DN1 00189 | | | 924<br>TURBO |
| | FD7 | beige/<br>brown-beige | -82 | | |
| | JR7 | grey-beige/<br>grey-beige-white<br>F >>92DN4 02148<br>F >>93DN1 00189 | | | 924<br>TURBO |
| | JN1 | black/<br>black-white<br>F 92DN4 02149>><br>F 93DN1 00190>> | | | 924<br>TURBO |
| | JN2 | brown/<br>brown-beige<br>F 92DN4 02149>><br>F 93DN1 00190>> | | | 924<br>TURBO |
| | LD4 | grey-beige/<br>grey-beige-white<br>F 92DN4 02149>><br>F 93DN1 00190>> | | | 924<br>TURBO |
| | GM4 | black/<br>black-white<br>piping<br>white<br>special model<br>"LE MANS" | 81 | | |
| | KU8 | black/<br>black-red<br>piping<br>black<br>special model | 82 | | 924 (CH) |
| (2) | A 911 521 038 58 | cover for cushion<br>leatherette/<br>centre part<br>pin stripe velour<br>F >>92FN4 01323 | /R | 1 | |
| | FD5 | black/<br>black-white<br>F >>92DN4 02148<br>F >>93DN1 00189 | | | 924<br>TURBO |
| | FD6 | brown/<br>brown-beige<br>F >>92DN4 02148<br>F >>93DN1 00189 | | | 924<br>TURBO |
| | FD7 | beige/<br>brown-beige | -82 | | |
| | JR7 | grey-beige/<br>grey-beige-white<br>F >>92DN4 02148<br>F >>93DN1 00189 | | | 924<br>TURBO |
| | JN1 | black/<br>black-white<br>F 92DN4 02149>><br>F 93DN1 00190>> | | | 924<br>TURBO |
| | JN2 | brown/<br>brown-beige<br>F 92DN4 02149>><br>F 93DN1 00190>> | | | 924<br>TURBO |
| | LD4 | grey-beige/<br>grey-beige-white<br>F 92DN4 02149>><br>F 93DN1 00190>> | | | 924<br>TURBO |

| Pos | Part Number | Name | Remarks | Qty | Model |
|---|---|---|---|---|---|
| | GM4 | black/<br>black-white<br>piping<br>white<br>special model<br>"LE MANS" | 81 | | |
| | KU8 | black/<br>black-red<br>piping<br>black<br>special model | 82 | | 924 (CH) |
| 2 | A 911 521 037 58 | cover for cushion<br>leatherette/<br>centre part<br>tartan cloth<br>F >>92FN4 01323 | /L | 1 | |
| | EN3 | black/<br>red-blue | | | |
| | EP1 | black/<br>green-blue | | | |
| | EP2 | brown/<br>brown-beige | | | |
| | EP3 | beige/<br>brown-beige | | | |
| (2) | A 911 521 038 58 | cover for cushion<br>leatherette/<br>centre part<br>tartan cloth<br>F >>92FN4 01323 | /R | 1 | |
| | EN3 | black/<br>red-blue | | | |
| | EP1 | black/<br>green-blue | | | |
| | EP2 | brown/<br>brown-beige | | | |
| | EP3 | beige/<br>brown-beige | | | |
| 2 | A 911 521 037 58 | cover for cushion<br>leatherette/<br>centre part<br>checker board velour<br>F >>92FN4 01323 | /L | 1 | |
| | FD8 | black/<br>grey/black | -82 | | |
| | FD9 | brown/<br>beige/brown | -82 | | |
| | FE1 | beige/<br>beige/brown | -82 | | |
| | JR4 | black/<br>light grey-black<br>F >>92DN4 02148<br>F >>93DN1 00189 | | | 924<br>TURBO |
| | JR5 | brown/<br>brown-grey<br>F >>92DN4 02148<br>F >>93DN1 00189 | | | 924<br>TURBO |
| | JR6 | grey-beige/<br>brown-grey<br>F >>92DN4 02148<br>F >>93DN1 00189 | | | 924<br>TURBO |
| | LD5 | black/<br>light grey-black<br>F 92DN4 02149>><br>F 93DN1 00190>> | | | 924<br>TURBO |
| | LD6 | brown/<br>brown-grey<br>F 92DN4 02149>><br>F 93DN1 00190>> | | | 924<br>TURBO |
| | LD7 | grey-beige/<br>brown-grey<br>F 92DN4 02149>><br>F 93DN1 00190>> | | | 924<br>TURBO |
| (2) | A 911 521 038 58 | cover for cushion<br>leatherette/<br>centre part<br>checker board velour<br>F >>92FN4 01323 | /R | 1 | |
| | FD8 | black/<br>grey/black | -82 | | |
| | FD9 | brown/<br>beige/brown | -82 | | |
| | FE1 | beige/<br>beige/brown | -82 | | |

| Pos | Part Number | Name | Remarks | Qty | Model |
|---|---|---|---|---|---|
| | JR4 | black/<br>light grey-black<br>F >>92DN4 02148<br>F >>93DN1 00189 | | | <br><br>924<br>TURBO |
| | JR5 | brown/<br>brown-grey<br>F >>92DN4 02148<br>F >>93DN1 00189 | | | <br><br>924<br>TURBO |
| | JR6 | grey-beige/<br>brown-grey<br>F >>92DN4 02148<br>F >>93DN1 00189 | | | <br><br>924<br>TURBO |
| | LD5 | black/<br>light grey-black<br>F 92DN4 02149>><br>F 93DN1 00190>> | | | <br><br>924<br>TURBO |
| | LD6 | brown/<br>brown-grey<br>F 92DN4 02149>><br>F 93DN1 00190>> | | | <br><br>924<br>TURBO |
| | LD7 | grey-beige/<br>brown-grey<br>F 92DN4 02149>><br>F 93DN1 00190>> | | | <br><br>924<br>TURBO |
| 2 | A 911 521 037 58 | cover for cushion<br>leatherette/<br>centre part in cloth<br>stripe design<br>F >>92FN4 01323 | /L | 1 | |
| | HS9 | black/<br>silver-black<br>special model | 82 | | |
| (2) | A 911 521 038 58 | cover for cushion<br>leatherette/<br>centre part in cloth<br>stripe design<br>F >>92FN4 01323 | /R | 1 | |
| | HS9 | black/<br>silver-black<br>special model | 82 | | |
| 2 | A 911 521 037 58 | cover for cushion<br>leatherette/<br>centre part<br>porsche lettering cloth<br>F >>92FN4 01323 | /L | 1 | |
| | LR6 | black/black | 84 | | |
| | LR7 | brown/brown | 84 | | |
| | LR8 | grey-beige/grey-beige | 84 | | |
| | PX1 | black/black | 85 | | |
| | PX3 | brown/brown | 85 | | |
| | QD8 | grey-beige/grey-beige | 85 | | |
| (2) | A 911 521 038 58 | cover for cushion<br>leatherette/<br>centre part<br>porsche lettering cloth<br>F >>92FN4 01323 | /R | 1 | |
| | LR6 | black/black | 84 | | |
| | LR7 | brown/brown | 84 | | |
| | LR8 | grey-beige/grey-beige | 84 | | |
| | PX1 | black/black | 85 | | |
| | PX3 | brown/brown | 85 | | |
| | QD8 | grey-beige/grey-beige | 85 | | |
| 2 | A 911 521 037 14 | cover for cushion<br>leather/<br>centre part in cloth<br>stripe design | /L | 1 | M 402 |
| | HU2 | black/<br>silver-black<br>special model | 82 | | |
| (2) | A 911 521 038 14 | cover for cushion<br>leather/<br>centre part in cloth<br>stripe design | /R | 1 | M 402 |
| | HU2 | black/<br>silver-black<br>special model | 82 | | |

| Pos | Part Number | Name | Remarks | Qty | Model |
|---|---|---|---|---|---|
| 2A | A 911 521 037 58 | cover for cushion<br>leatherette/<br>seat surface<br>berber cloth<br>F >>92FN4 01323 | /L | 1 | |
| | GE9 | black/<br>grey/black<br>F >>92DN4 02148<br>F >>93DN1 00189 | | | 924<br>TURBO |
| | FE3 | brown/<br>beige/brown<br>F >>92DN4 02148<br>F >>93DN1 00189 | | | 924<br>TURBO |
| | FE4 | beige/<br>beige/brown | 81-82 | | |
| | JR8 | grey-beige/<br>grey-beige-grey<br>F >>92DN4 02148<br>F >>93DN1 00189 | | | 924<br>TURBO |
| | JM3 | black/<br>grey/black<br>F 92DN4 02149>><br>F 93DN1 00190>> | | | 924<br>TURBO |
| | JM4 | brown/<br>beige/brown<br>F 92DN4 02149>><br>F 93DN1 00190>> | | | 924<br>TURBO |
| | JM9 | grey-beige/<br>grey-beige-grey<br>F 92DN4 02149>><br>F 93DN1 00190>> | | | 924<br>TURBO |
| (2A) | A 911 521 038 58 | cover for cushion<br>leatherette/<br>seat surface<br>berber cloth<br>F >>92FN4 01323 | /R | 1 | |
| | GE9 | black/<br>grey/black<br>F >>92DN4 02148<br>F >>93DN1 00189 | | | 924<br>TURBO |
| | FE3 | brown/<br>beige/brown<br>F >>92DN4 02148<br>F >>93DN1 00189 | | | 924<br>TURBO |
| | FE4 | beige/<br>beige/brown | 81-82 | | |
| | JR8 | grey-beige/<br>grey-beige-grey<br>F >>92DN4 02148<br>F >>93DN1 00189 | | | 924<br>TURBO |
| | JM3 | black/<br>grey/black<br>F 92DN4 02149>><br>F 93DN1 00190>> | | | 924<br>TURBO |
| | JM4 | brown/<br>beige/brown<br>F 92DN4 02149>><br>F 93DN1 00190>> | | | 924<br>TURBO |
| | JM9 | grey-beige/<br>grey-beige-grey<br>F 92DN4 02149>><br>F 93DN1 00190>> | | | 924<br>TURBO |
| 2A | A 911 521 037 58 | cover for cushion<br>F >>92FN4 01323 | /L | 1 | |
| (2A) | A 911 521 038 58 | cover for cushion<br>F >>92FN4 01323 | /R | 1 | |
| 2A | A 911 521 037 17 | cover for cushion<br>leatherette/<br>seat surface<br>porsche lettering cloth | /L 84- | 1 | |
| | LR1 | black/black | 84 | | |
| | LR2 | brown/brown | 84 | | |
| | LR3 | grey-beige/grey-beige | 84 | | |
| | PX2 | black/black | 85 | | |
| | PX4 | brown/brown | 85 | | |
| | QD9 | grey-beige/grey-beige | 85 | | |
| | NC3 | black/<br>anthracite-burgundy<br>special model | 84 | | TURBO (I) |
| (2A) | A 911 521 038 17 | cover for cushion<br>leatherette/<br>seat surface<br>porsche lettering cloth | /R 84- | 1 | |

| Pos | Part Number | Name | Remarks | Qty | Model |
|---|---|---|---|---|---|
| | LR1 | black/black | 84 | | |
| | LR2 | brown/brown | 84 | | |
| | LR3 | grey-beige/grey-beige | 84 | | |
| | PX2 | black/black | 85 | | |
| | PX4 | brown/brown | 85 | | |
| | QD9 | grey-beige/grey-beige | 85 | | |
| | NC3 | black/<br>anthracite-burgundy<br>special model | 84 | | TURBO (I) |
| 2B | A 911 521 037 57 | cover for cushion<br>leatherette | /L | 1 | |
| | DD2 | beige | -82 | | |
| | DD4 | brown<br>F >>92DN4 02148<br>F >>93DN1 00189 | | | 924<br>TURBO |
| | DD6 | black<br>F >>92DN4 02148<br>F >>93DN1 00189 | | | 924<br>TURBO |
| | 4FK | grey-beige<br>F >>92DN4 02148<br>F >>93DN1 00189 | | | 924<br>TURBO |
| | MC3 | black<br>F 92DN4 02149>><br>F 93DN1 00190>> | | | 924<br>TURBO |
| | MC4 | brown<br>F 92DN4 02149>><br>F 93DN1 00190>> | | | 924<br>TURBO |
| | MC5 | grey-beige<br>F 92DN4 02149>><br>F 93DN1 00190>> | | | 924<br>TURBO |
| (2B) | A 911 521 038 57 | cover for cushion<br>leatherette | /R | 1 | |
| | DD2 | beige | -82 | | |
| | DD4 | brown<br>F >>92DN4 02148<br>F >>93DN1 00189 | | | 924<br>TURBO |
| | DD6 | black<br>F >>92DN4 02148<br>F >>93DN1 00189 | | | 924<br>TURBO |
| | 4FK | grey-beige<br>F >>92DN4 02148<br>F >>93DN1 00189 | | | 924<br>TURBO |
| | MC3 | black<br>F 92DN4 02149>><br>F 93DN1 00190>> | | | 924<br>TURBO |
| | MC4 | brown<br>F 92DN4 02149>><br>F 93DN1 00190>> | | | 924<br>TURBO |
| | MC5 | grey-beige<br>F 92DN4 02149>><br>F 93DN1 00190>> | | | 924<br>TURBO |
| (2B) | A 911 521 037 60 | cover for cushion<br>leather | /L -80 | 1 | |
| | 1AJ | black | | | |
| | 2NF | beige | | | |
| | 3NG | brown | | | |
| (2B) | A 911 521 038 60 | cover for cushion<br>leather | /R -80 | 1 | |
| | 1AJ | black | | | |
| | 2NF | beige | | | |
| | 3NG | brown | | | |
| 2B | A 911 521 037 75 | cover for cushion<br>leatherette/<br>centre part<br>leather<br>not<br>perforated<br>F >>92FN4 01323 | /L | 1 | |
| | QE1 | black/black<br>F 92DN4 02149>>92EN4 01588 | | | |
| | QE2 | brown/brown<br>F 92DN4 02149>>92EN4 01588 | | | |
| | QE3 | grey-beige/grey-beige<br>F 92DN4 02149>>92EN4 01588 | | | |

| Pos | Part Number | Name | Remarks | Qty | Model |
|---|---|---|---|---|---|
| (2B) | A 911 521 038 75 | cover for cushion<br>leatherette/<br>centre part<br>leather<br>not<br>perforated<br>F >>92FN4 01323 | /R | 1 | |
| | QE1 | black/black<br>F 92DN4 02149>>92EN4 01588 | | | |
| | QE2 | brown/brown<br>F 92DN4 02149>>92EN4 01588 | | | |
| | QE3 | grey-beige/grey-beige<br>F 92DN4 02149>>92EN4 01588 | | | |
| 2B | A 911 521 037 75 | cover for cushion<br>leatherette/<br>centre part<br>leather<br>perforated<br>F >>92FN4 01323 | /L | 1 | |
| | JN3 | black/black<br>F 92EN4 01589>> | | | |
| | JN4 | brown/brown<br>F 92EN4 01589>> | | | |
| | JN5 | grey-beige/grey-beige<br>F 92EN4 01589>> | | | |
| (2B) | A 911 521 038 75 | cover for cushion<br>leatherette/<br>centre part<br>leather<br>perforated<br>F >>92FN4 01323 | /R | 1 | |
| | JN3 | black/black<br>F 92EN4 01589>> | | | |
| | JN4 | brown/brown<br>F 92EN4 01589>> | | | |
| | JN5 | grey-beige/grey-beige<br>F 92EN4 01589>> | | | |
| 3 | A 911 521 072 59 | backrest cover<br>leatherette/<br>centre part<br>FISCHGRAET<br>F >>92FN4 01323 | | 2 | |

| Pos | Part Number | Name | Remarks | Qty | Model |
|---|---|---|---|---|---|
| | DC2 | beige/<br>brown-beige | -80 | | |
| | DC5 | brown/<br>brown-beige | -80 | | |
| | DC8 | black/<br>orange | -80 | | |
| 3 | A 911 521 072 59 | backrest cover<br>leatherette/<br>centre part in cloth<br>pin stripe velour<br>F >>92FN4 01323 | | 2 | |
| | FD5 | black/<br>black-white<br>F >>92DN4 02148<br>F >>93DN1 00189 | | | 924<br>TURBO |
| | FD6 | brown/<br>brown-beige<br>F >>92DN4 02148<br>F >>93DN1 00189 | | | 924<br>TURBO |
| | FD7 | beige/<br>brown-beige | -82 | | |
| | JR7 | grey-beige/<br>grey-beige-white<br>F >>92DN4 02148<br>F >>93DN1 00189 | | | 924<br>TURBO |
| | JN1 | black/<br>black-white<br>F 92DN4 02149>><br>F 93DN1 00190>> | | | 924<br>TURBO |
| | JN2 | brown/<br>brown-beige<br>F 92DN4 02149>><br>F 93DN1 00190>> | | | 924<br>TURBO |
| | LD4 | grey-beige/<br>grey-beige-white<br>F 92DN4 02149>><br>F 93DN1 00190>> | | | 924<br>TURBO |
| 3 | A 911 521 072 59 | backrest cover<br>leatherette/<br>centre part in cloth<br>stripe design<br>F >>92FN4 01323 | | 2 | |

| Pos | Part Number | Name | Remarks | Qty | Model |
|---|---|---|---|---|---|
| | HS9 | black/<br>silver-black<br>special model | 82 | | |
| 3 | A 911 521 072 24 | backrest cover<br>leather<br>centre part in cloth<br>stripe design | | 2 | |
| | HU2 | black/<br>silver-black<br>special model | 82 | | |
| 3A | A 911 521 072 59 | backrest cover<br>leatherette/<br>centre part<br>and<br>head rest<br>tartan cloth<br>F >>92FN4 01323 | | 2 | |
| | EN3 | black/<br>red-blue | | | |
| | EP1 | black/<br>green-blue | | | |
| | EP2 | brown/<br>brown-beige | | | |
| | EP3 | beige/<br>brown-beige | | | |
| 3A | A 911 521 072 59 | backrest cover<br>leatherette/<br>centre part<br>and<br>head rest<br>checker board velour<br>F >>92FN4 01323 | | 2 | |
| | FD8 | black/<br>grey/black | -82 | | |
| | FD9 | brown/<br>beige/brown | -82 | | |
| | FE1 | beige/<br>beige/brown | -82 | | |
| | JR4 | black/<br>light grey-black<br>F >>92DN4 02148<br>F >>93DN1 00189 | | | 924<br>TURBO |
| | JR5 | brown/<br>brown-grey<br>F >>92DN4 02148<br>F >>93DN1 00189 | | | 924<br>TURBO |
| | JR6 | grey-beige/<br>brown-grey<br>F >>92DN4 02148<br>F >>93DN1 00189 | | | 924<br>TURBO |
| | LD5 | black/<br>light grey-black<br>F 92DN4 02149>><br>F 93DN1 00190>> | | | 924<br>TURBO |
| | LD6 | brown/<br>brown-grey<br>F 92DN4 02149>><br>F 93DN1 00190>> | | | 924<br>TURBO |
| | LD7 | grey-beige/<br>brown-grey<br>F 92DN4 02149>><br>F 93DN1 00190>> | | | 924<br>TURBO |
| 3A | A 911 521 072 59 | backrest cover<br>leatherette/<br>centre part<br>and<br>head rest<br>pin stripe velour<br>F >>92FN4 01323 | | 2 | |
| | GM4 | black/<br>black-white<br>piping<br>white<br>special model<br>"LE MANS" | 81 | | |
| | KU8 | black/<br>black-red<br>piping<br>black<br>special model | 82 | | 924 (CH) |
| 3A | A 911 521 072 59 | backrest cover<br>leatherette/<br>centre part<br>and<br>head rest<br>porsche lettering cloth<br>F >>92FN4 01323 | | 2 | |

| Pos | Part Number | Name | Remarks | Qty | Model |
|---|---|---|---|---|---|
| | LR6 | black/black | 84 | | |
| | LR7 | brown/brown | 84 | | |
| | LR8 | grey-beige/grey-beige | 84 | | |
| | PX1 | black/black | 85 | | |
| | PX3 | brown/brown | 85 | | |
| | QD8 | grey-beige/grey-beige | 85 | | |
| 3B | A 911 521 072 59 | backrest cover<br>leatherette/<br>backrest surface<br>berber cloth<br>F >>92FN4 01323 | | 2 | |
| | GE9 | black/<br>grey/black<br>F >>92DN4 02148<br>F >>93DN1 00189 | | | <br><br>924<br>TURBO |
| | FE3 | brown/<br>beige/brown<br>F >>92DN4 02148<br>F >>93DN1 00189 | | | <br><br>924<br>TURBO |
| | FE4 | beige/<br>beige/brown | 81-82 | | |
| | JR8 | grey-beige/<br>grey-beige-grey<br>F >>92DN4 02148<br>F >>93DN1 00189 | | | <br><br>924<br>TURBO |
| | JM3 | black/<br>grey/black<br>F 92DN4 02149>><br>F 93DN1 00190>> | | | <br><br>924<br>TURBO |
| | JM4 | brown/<br>beige/brown<br>F 92DN4 02149>><br>F 93DN1 00190>> | | | <br><br>924<br>TURBO |
| | JM9 | grey-beige/<br>grey-beige-grey<br>F 92DN4 02149>><br>F 93DN1 00190>> | | | <br><br>924<br>TURBO |
| 3B | A 911 521 072 59 | backrest cover<br>F >>92FN4 01323 | | 2 | |

| Pos | Part Number | Name | Remarks | Qty | Model |
|---|---|---|---|---|---|
| 3B | A 911 521 072 25 | backrest cover<br>leatherette/<br>backrest surface<br>porsche lettering cloth | 84- | 2 | |
| | LR1 | black/black | 84 | | |
| | LR2 | brown/brown | 84 | | |
| | LR3 | grey-beige/grey-beige | 84 | | |
| | PX2 | black/black | 85 | | |
| | PX4 | brown/brown | 85 | | |
| | QD9 | grey-beige/grey-beige | 85 | | |
| | NC3 | black/<br>anthracite-burgundy<br>special model | 84 | | TURBO (I) |
| 3C | A 911 521 072 57 | backrest cover<br>leatherette | | 2 | |
| | DD2 | beige | -82 | | |
| | DD4 | brown<br>F >>92DN4 02148<br>F >>93DN1 00189 | | | <br>924<br>TURBO |
| | DD6 | black<br>F >>92DN4 02148<br>F >>93DN1 00189 | | | <br>924<br>TURBO |
| | 4FK | grey-beige<br>F >>92DN4 02148<br>F >>93DN1 00189 | | | <br>924<br>TURBO |
| | MC3 | black<br>F 92DN4 02149>><br>F 93DN1 00190>> | | | <br>924<br>TURBO |
| | MC4 | brown<br>F 92DN4 02149>><br>F 93DN1 00190>> | | | <br>924<br>TURBO |
| | MC5 | grey-beige<br>F 92DN4 02149>><br>F 93DN1 00190>> | | | <br>924<br>TURBO |
| (3C) | A 911 521 072 60 | backrest cover<br>leather | -80 | 2 | |
| | 1AJ | black | | | |

| Pos | Part Number | Name | Remarks | Qty | Model |
|---|---|---|---|---|---|
| | 2NF | beige | | | |
| | 3NG | brown | | | |
| 3C | A 911 521 072 75 | backrest cover<br>leatherette/<br>centre part<br>leather<br>not<br>perforated<br>F >>92FN4 01323 | | 2 | |
| | QE1 | black/black<br>F 92DN4 02149>>92EN4 01588 | | | |
| | QE2 | brown/brown<br>F 92DN4 02149>>92EN4 01588 | | | |
| | QE3 | grey-beige/grey-beige<br>F 92DN4 02149>>92EN4 01588 | | | |
| 3C | A 911 521 072 75 | backrest cover<br>leatherette/<br>centre part<br>leather<br>perforated<br>F >>92FN4 01323 | | 2 | |
| | JN3 | black/black<br>F 92EN4 01589>> | | | |
| | JN4 | brown/brown<br>F 92EN4 01589>> | | | |
| | JN5 | grey-beige/grey-beige<br>F 92EN4 01589>> | | | |
| 3A | A 911 521 072 76 | backrest cover<br>leatherette/<br>centre part<br>porsche lettering cloth<br>F 92FN4 01324>> | | 2 | |
| | PX1 | black/black | | | |
| | PX3 | brown/brown | | | |
| | NX9 | light grey/light grey<br>leatherette/<br>centre part in cloth<br>pin stripe velour | | | |
| | JN1 | black/<br>black-white | | | |
| | JN2 | brown/<br>brown-beige | | | |
| | RC7 | light grey/<br>light grey-white | | | |
| 3A | A 911 521 072 76 | backrest cover<br>leatherette/<br>centre part in cloth<br>pin stripe flannel<br>F 92FN4 01324>> | | 2 | |
| | NX4 | black/anthracite | | | |
| | NX5 | brown/brown | | | |
| | NX6 | light grey/light grey | | | |
| 2 | A 911 521 037 62 | cover for cushion<br>leatherette/<br>centre part<br>porsche lettering cloth<br>F 92FN4 01324>> | /L | 1 | |
| | PX1 | black/black | | | |
| | PX3 | brown/brown | | | |
| | NX9 | light grey/light grey | | | |
| (2) | A 911 521 038 62 | cover for cushion<br>leatherette/<br>centre part<br>porsche lettering cloth<br>F 92FN4 01324>> | /R | 1 | |
| | PX1 | black/black | | | |
| | PX3 | brown/brown | | | |
| | NX9 | light grey/light grey | | | |
| 2 | A 911 521 037 62 | cover for cushion<br>leatherette/<br>centre part in cloth<br>pin stripe velour<br>F 92FN4 01324>> | /L | 1 | |
| | JN1 | black/<br>black-white | | | |
| | JN2 | brown/<br>brown-beige | | | |

| Pos | Part Number | Name | Remarks | Qty | Model |
|---|---|---|---|---|---|
| | RC7 | light grey/<br>light grey-white | | | |
| (2) | A 911 521 038 62 | cover for cushion<br>leatherette/<br>centre part in cloth<br>pin stripe velour<br>F 92FN4 01324>> | /R | 1 | |
| | JN1 | black/<br>black-white | | | |
| | JN2 | brown/<br>brown-beige | | | |
| | RC7 | light grey/<br>light grey-white | | | |
| 2 | A 911 521 037 62 | cover for cushion<br>leatherette/<br>centre part in cloth<br>pin stripe flannel<br>F 92FN4 01324>> | /L | 1 | |
| | NX4 | black/anthracite | | | |
| | NX5 | brown/brown | | | |
| | NX6 | light grey/light grey | | | |
| (2) | A 911 521 038 62 | cover for cushion<br>leatherette/<br>centre part in cloth<br>pin stripe flannel<br>F 92FN4 01324>> | /R | 1 | |
| | NX4 | black/anthracite | | | |
| | NX5 | brown/brown | | | |
| | NX6 | light grey/light grey | | | |
| (3C) | A 911 521 072 77 | backrest cover<br>leatherette/<br>centre part<br>leather<br>perforated<br>F 92FN4 01324>> | | 2 | |
| | JN3 | black/black | | | |
| | JN4 | brown/brown | | | |
| | NZ7 | light grey/light grey | | | |
| 2B | A 911 521 037 76 | cover for cushion<br>leatherette/<br>centre part<br>leather<br>perforated<br>F 92FN4 01324>> | /L | 1 | |
| | JN3 | black/black | | | |
| | JN4 | brown/brown | | | |
| | NZ7 | light grey/light grey | | | |
| (2B) | A 911 521 038 76 | cover for cushion<br>leatherette/<br>centre part<br>leather<br>perforated<br>F 92FN4 01324>> | /R | 1 | |
| | JN3 | black/black | | | |
| | JN4 | brown/brown | | | |
| | NZ7 | light grey/light grey | | | |

- -- E N D -- -

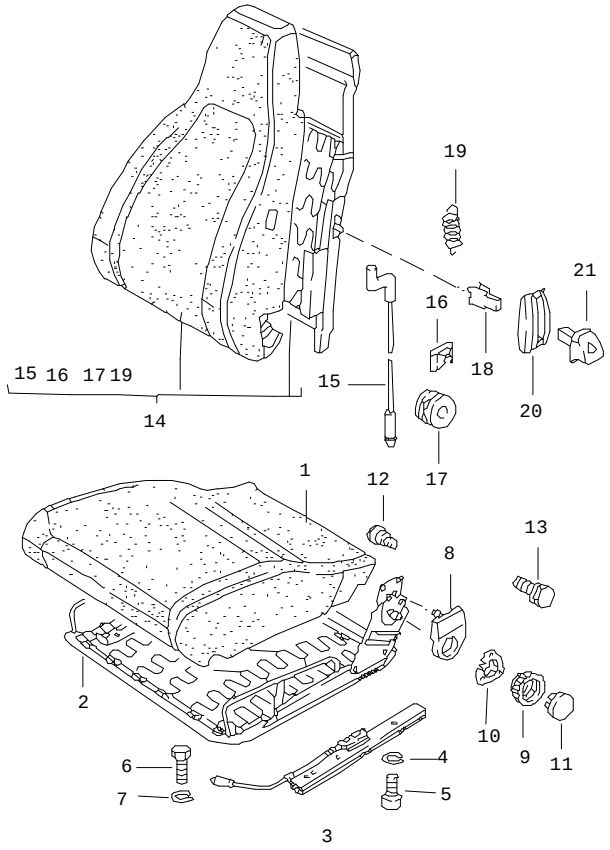


| Pos | Part Number | Name | Remarks | Qty | Model |
|---|---|---|---|---|---|
| | | front seat<br>single parts | | | |
| 1 | 911 521 385 01 | foam part<br>seat cushion | /L | 1 | |
| (1) | E 911 521 386 01 | foam part<br>seat cushion | /R | 1 | |
| 2 | 911 521 069 56 | seat frame | /L | 1 | |
| (2) | 911 521 070 56 | seat frame | /R | 1 | |
| 3 | A 928 521 489 02 | seat rail<br>left seat<br>outer<br>with locking device | | 1 | |
| (3) | A 928 521 490 02 | seat rail<br>right seat<br>outer<br>with locking device | | 1 | |
| (3) | 944 521 491 00 | seat rail<br>inner<br>see tpi<br>GR.8 NR.34 | | 2 | |
| 4 | N 012 006 4 | lock ring<br>B 6 | | 8 | |
| 5 | 900 067 009 02 | pan-head screw<br>M 6 X 15 | | 8 | |
| 6 | N 010 215 13 | hexagon-head bolt<br>M 6 X 15 | | 8 | |
| 7 | N 012 006 4 | lock ring<br>B 6 | | 8 | |
| 8 | 911 521 359 02 | cover | /L | 1 | |
| (8) | 911 521 360 02 | cover | /R | 1 | |
| 9 | E 911 521 381 00 | shifting wheel<br>for backrest adjustment | | 2 | |
| 10 | 911 521 571 00 | tensioning spring | | 2 | |
| 11 | 911 521 383 00 | cover | | 2 | |
| 12 | 911 521 371 00 | screw | | 2 | |
| 13 | 911 521 547 00 | hexagon-head bolt | | 4 | |

| Model | Year | MG | SG | Illustration | Restrictions | Update | | | |
|---|---|---|---|---|---|---|---|---|---|
| 924 | 85 | 8 | 08 | 808-01 | | 179 | 10:12 | 16.08.2004 | PORSCHE PET PORSCHE |

| Pos | Part Number | Name | Remarks | Qty | Model | Pos | Part Number | Name | Remarks | Qty | Model |
|---|---|---|---|---|---|---|---|---|---|---|---|
| 14 | A 477 881 047 | backrest<br>without<br>backrest cover | /L | 1 | | | | | | | |
| (14) | A 477 881 048 | backrest<br>without<br>backrest cover | /R | 1 | | | | | | | |
| 15 | 911 521 361 00 | cable<br>release<br>backrest | | 2 | | | | | | | |
| 16 | 911 521 369 00 | terminal<br>for<br>cable | | 2 | | | | | | | |
| 17 | 911 521 343 00 | guide bush | | 2 | | | | | | | |
| 18 | 311 881 247 | clamp | | 2 | | | | | | | |
| 19 | 311 881 287 A | spring | | 2 | | | | | | | |
| 20 | 311 881 607 A | rose | | 2 | | | | | | | |
| 21 | 113 881 633 E | knob | | 2 | | | | | | | |
| | 01C | black | | | | | | | | | |
| | | - -- E N D -- - | | | | | | | | | |

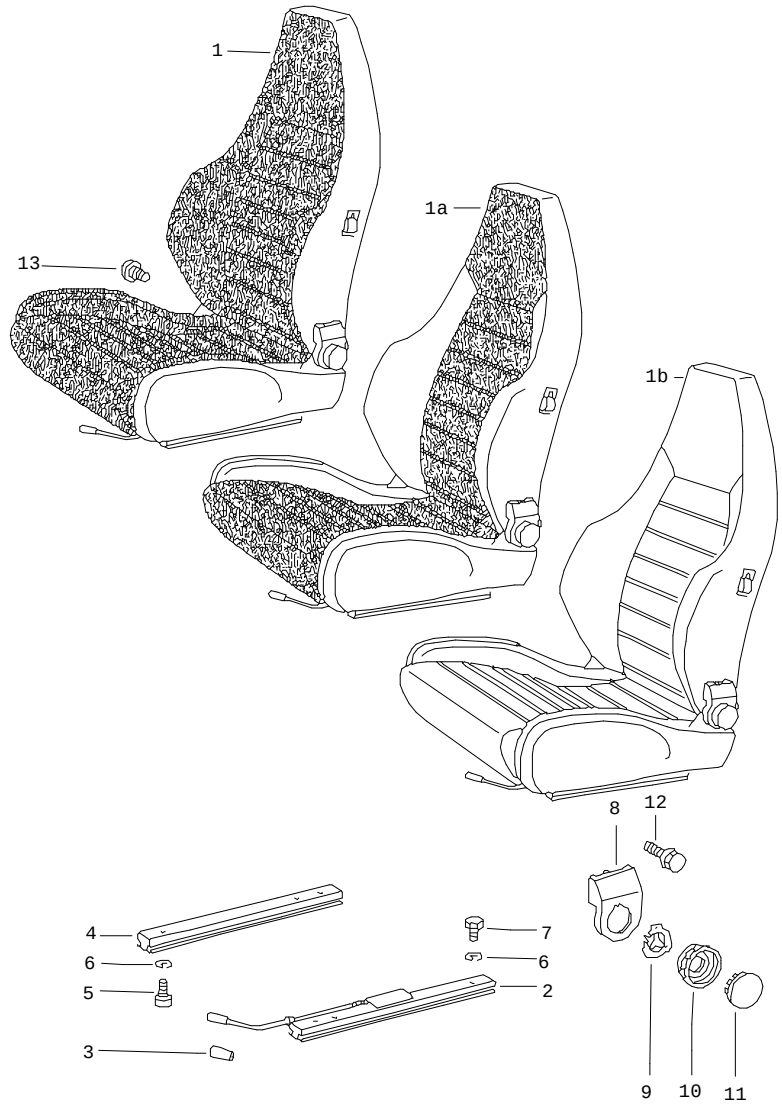


| Pos | Part Number | Name | Remarks | Qty | Model |
|---|---|---|---|---|---|
| | | sports seat<br>complete | | | |
| 1 | A 911 521 007 07 | sports seat<br>leatherette/<br>seat and backrest surface<br>berber cloth | /L | 1 | |
| | GE9 | black/<br>grey/black<br>F >>92DN4 02148<br>F >>93DN1 00189 | | | |
| | FE3 | brown/<br>beige/brown<br>F >>92DN4 02148<br>F >>93DN1 00189 | | | |
| | FE4 | beige/<br>beige/brown | 81-82 | | |
| | JR8 | grey-beige/<br>grey-beige-grey<br>F >>92DN4 02148<br>F >>93DN1 00189 | | | |
| | JM3 | black/<br>grey/black<br>F 92DN4 02149>><br>F 93DN1 00190>> | | | |
| | JM4 | brown/<br>beige/brown<br>F 92DN4 02149>><br>F 93DN1 00190>> | | | |
| | JM9 | grey-beige/<br>grey-beige-grey<br>F 92DN4 02149>><br>F 93DN1 00190>> | | | |
| (1) | A 911 521 008 07 | sports seat<br>leatherette/<br>seat and backrest surface<br>berber cloth | /R | 1 | |
| | GE9 | black/<br>grey/black<br>F >>92DN4 02148<br>F >>93DN1 00189 | | | |

| Pos | Part Number | Name | Remarks | Qty | Model |
|---|---|---|---|---|---|
| | FE3 | brown/<br>beige/brown<br>F >>92DN4 02148<br>F >>93DN1 00189 | | | |
| | FE4 | beige/<br>beige/brown | 81-82 | | |
| | JR8 | grey-beige/<br>grey-beige-grey<br>F >>92DN4 02148<br>F >>93DN1 00189 | | | |
| | JM3 | black/<br>grey/black<br>F 92DN4 02149>><br>F 93DN1 00190>> | | | |
| | JM4 | brown/<br>beige/brown<br>F 92DN4 02149>><br>F 93DN1 00190>> | | | |
| | JM9 | grey-beige/<br>grey-beige-grey<br>F 92DN4 02149>><br>F 93DN1 00190>> | | | |
| 1 | A 911 521 007 07 | sports seat<br>leatherette/<br>seat and backrest surface<br>porsche lettering cloth | /L | 1 | |
| | LR1 | black/black | 84 | | |
| | LR2 | brown/brown | 84 | | |
| | LR3 | grey-beige/grey-beige | 84 | | |
| | PX2 | black/black | 85 | | |
| | PX4 | brown/brown | 85 | | |
| | QD9 | grey-beige/grey-beige | 85 | | |
| (1) | A 911 521 008 07 | sports seat<br>leatherette/<br>seat and backrest surface<br>porsche lettering cloth | /R | 1 | |
| | LR1 | black/black | 84 | | |
| | LR2 | brown/brown | 84 | | |
| | LR3 | grey-beige/grey-beige | 84 | | |
| | PX2 | black/black | 85 | | |
| | PX4 | brown/brown | 85 | | |
| | QD9 | grey-beige/grey-beige | 85 | | |
| 1 | A 911 521 007 07 | sports seat<br>leatherette/<br>seat and backrest surface<br>pin stripe velour | /L | 1 | |
| | GF4 | black/<br>black-red<br>piping<br>red | 81 | | GT |
| (1) | A 911 521 008 07 | sports seat<br>leatherette/<br>seat and backrest surface<br>pin stripe velour | /R | 1 | |
| | GF4 | black/<br>black-red<br>piping<br>red | 81 | | GT |
| 1A | A 911 521 007 07 | sports seat<br>leatherette/<br>centre part<br>and<br>head rest<br>porsche lettering cloth | /L | 1 | |
| | LR6 | black/black | 84 | | |
| | LR7 | brown/brown | 84 | | |
| | LR8 | grey-beige/grey-beige | 84 | | |
| | PX1 | black/black | 85 | | |
| | PX3 | brown/brown | 85 | | |
| | QD8 | grey-beige/grey-beige | 85 | | |
| (1A) | A 911 521 008 07 | sports seat<br>leatherette/<br>centre part<br>and<br>head rest<br>porsche lettering cloth | /R | 1 | |

| Pos | Part Number | Name | Remarks | Qty | Model |
|---|---|---|---|---|---|
| | LR6 | black/black | 84 | | |
| | LR7 | brown/brown | 84 | | |
| | LR8 | grey-beige/grey-beige | 84 | | |
| | PX1 | black/black | 85 | | |
| | PX3 | brown/brown | 85 | | |
| | QD8 | grey-beige/grey-beige | 85 | | |
| 1B | A 911 521 007 64 | sports seat<br>leather | /L | 1 | |
| | 1AJ | black<br>F >>92DN4 02148<br>F >>93DN1 00189 | | | |
| | 2NF | beige | -82 | | |
| | 3NG | brown<br>F >>92DN4 02148<br>F >>93DN1 00189 | | | |
| | 6FL | grey-beige<br>F >>92DN4 02148<br>F >>93DN1 00189 | | | |
| | KZ2 | black<br>F 92DN4 02149>><br>F 93DN1 00190>> | | | |
| | KZ5 | brown<br>F 92DN4 02149>><br>F 93DN1 00190>> | | | |
| | KZ4 | grey-beige<br>F 92DN4 02149>><br>F 93DN1 00190>> | | | |
| (1B) | A 911 521 008 64 | sports seat<br>leather | /R | 1 | |
| | 1AJ | black<br>F >>92DN4 02148<br>F >>93DN1 00189 | | | |
| | 2NF | beige | -82 | | |
| | 3NG | brown<br>F >>92DN4 02148<br>F >>93DN1 00189 | | | |

| Pos | Part Number | Name | Remarks | Qty | Model |
|---|---|---|---|---|---|
| | 6FL | grey-beige<br>F >>92DN4 02148<br>F >>93DN1 00189 | | | |
| | KZ2 | black<br>F 92DN4 02149>><br>F 93DN1 00190>> | | | |
| | KZ5 | brown<br>F 92DN4 02149>><br>F 93DN1 00190>> | | | |
| | KZ4 | grey-beige<br>F 92DN4 02149>><br>F 93DN1 00190>> | | | |
| 2 | A 928 521 489 02 | seat rail<br>left seat<br>outer<br>with locking device | /L | 1 | |
| (2) | A 928 521 490 02 | seat rail<br>right seat<br>outer<br>with locking device | /R | 1 | |
| (3) | 911 521 533 01 | handle<br>f.longitudinal adjustment | | 2 | |
| | 01C | satin black | | | |
| 4 | 944 521 491 00 | seat rail<br>inner<br>without locking device<br>see tpi<br>GR.8 NR.34 | | 2 | |
| 5 | N 014 761 2 | pan-head screw<br>M 6 X 12 | | 8 | |
| 6 | N 012 007 2 | lock ring<br>A 6 | | 16 | |
| 7 | N 010 215 13 | hexagon-head bolt<br>M 6 X 15 | | 8 | |
| 8 | 911 521 359 02 | cover | /L | 1 | |
| (8) | 911 521 360 02 | cover | /R | 1 | |
| 9 | 911 521 571 00 | tensioning spring | | 2 | |
| 10 | E 911 521 381 00 | shifting wheel | | 2 | |

| Pos | Part Number | Name | Remarks | Qty | Model | Pos | Part Number | Name | Remarks | Qty | Model |
|---|---|---|---|---|---|---|---|---|---|---|---|
| 11 | 911 521 383 00 | cover | | 2 | | | | | | | |
| 12 | 911 521 371 00 | screw<br>inner | | 2 | | | | | | | |
| 13 | 911 521 547 00 | hexagon-head bolt | | 4 | | | | | | | |
| | | - -- E N D -- - | | | | | | | | | |

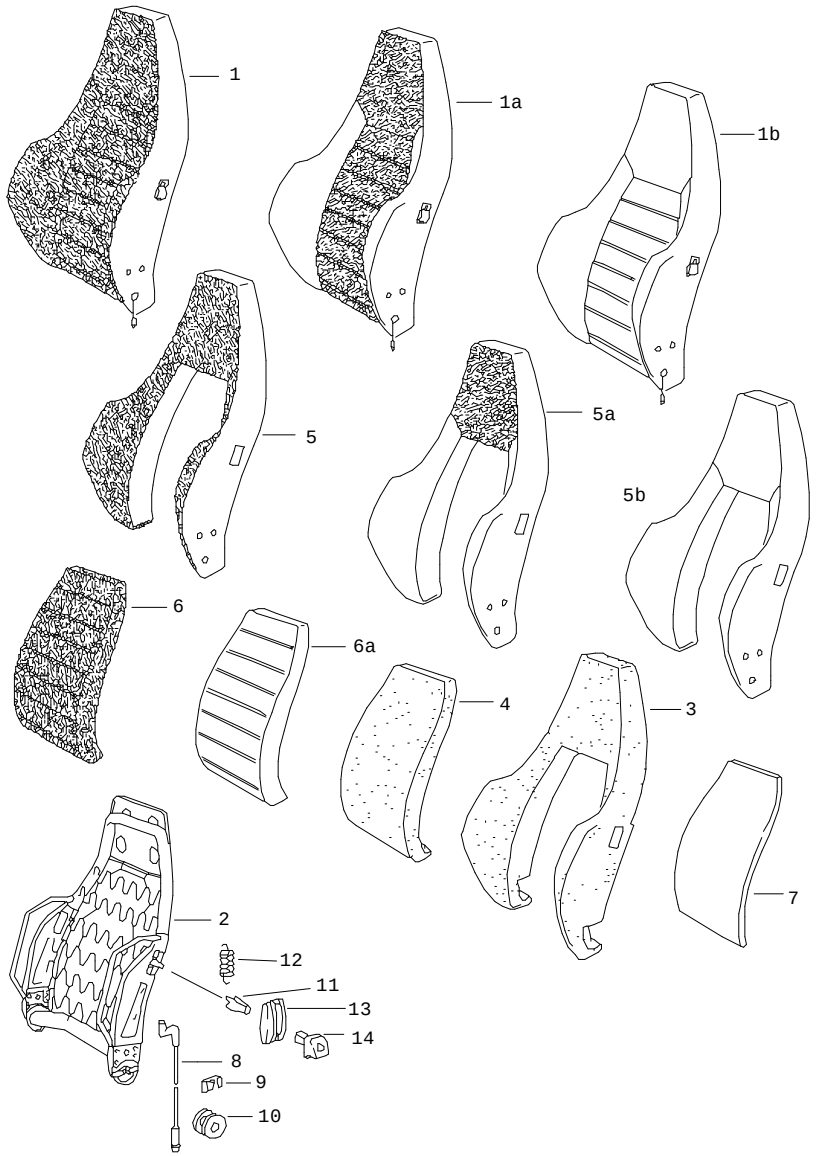


| Pos | Part Number | Name | Remarks | Qty | Model |
|---|---|---|---|---|---|
| | | sports seat<br>backrest<br>and<br>single parts | | | |
| 1 | A 911 521 603 07 | backrest<br>leatherette/<br>backrest surface<br>berber cloth | /L | 1 | |
| | GE9 | black/<br>grey/black<br>F >>92DN4 02148<br>F >>93DN1 00189 | | | |
| | FE3 | brown/<br>beige/brown<br>F >>92DN4 02148<br>F >>93DN1 00189 | | | |
| | FE4 | beige/<br>beige/brown | 81-82 | | |
| | JR8 | grey-beige/<br>grey-beige-grey<br>F >>92DN4 02148<br>F >>93DN1 00189 | | | |
| | JM3 | black/<br>grey/black<br>F 92DN4 02149>><br>F 93DN1 00190>> | | | |
| | JM4 | brown/<br>beige/brown<br>F 92DN4 02149>><br>F 93DN1 00190>> | | | |
| | JM9 | grey-beige/<br>grey-beige-grey | | | |
| (1) | A 911 521 604 07 | backrest<br>leatherette/<br>backrest surface<br>berber cloth | /R | 1 | |
| | GE9 | black/<br>grey/black<br>F >>92DN4 02148<br>F >>93DN1 00189 | | | |

| Pos | Part Number | Name | Remarks | Qty | Model |
|---|---|---|---|---|---|
| | FE3 | brown/<br>beige/brown<br>F >>92DN4 02148<br>F >>93DN1 00189 | | | |
| | FE4 | beige/<br>beige/brown | 81-82 | | |
| | JR8 | grey-beige/<br>grey-beige-grey<br>F >>92DN4 02148<br>F >>93DN1 00189 | | | |
| | JM3 | black/<br>grey/black<br>F 92DN4 02149>><br>F 93DN1 00190>> | | | |
| | JM4 | brown/<br>beige/brown<br>F 92DN4 02149>><br>F 93DN1 00190>> | | | |
| | JM9 | grey-beige/<br>grey-beige-grey | | | |
| 1 | A 911 521 603 07 | backrest<br>leatherette/<br>backrest surface<br>porsche lettering cloth | /L | 1 | |
| | LR1 | black/black | 84 | | |
| | LR2 | brown/brown | 84 | | |
| | LR3 | grey-beige/grey-beige | 84 | | |
| | PX2 | black/black | 85 | | |
| | PX4 | brown/brown | 85 | | |
| | QD9 | grey-beige/grey-beige | 85 | | |
| (1) | A 911 521 604 07 | backrest<br>leatherette/<br>backrest surface<br>porsche lettering cloth | /R | 1 | |
| | LR1 | black/black | 84 | | |
| | LR2 | brown/brown | 84 | | |
| | LR3 | grey-beige/grey-beige | 84 | | |
| | PX2 | black/black | 85 | | |
| | PX4 | brown/brown | 85 | | |
| | QD9 | grey-beige/grey-beige | 85 | | |
| 1 | A 911 521 603 07 | backrest<br>leatherette/<br>backrest surface in cloth<br>pin stripe velour | /L | 1 | |
| | GF4 | black/<br>black-red<br>piping<br>red | 81 | | GT |
| (1) | A 911 521 604 07 | backrest<br>leatherette/<br>backrest surface in cloth<br>pin stripe velour | /R | 1 | |
| | GF4 | black/<br>black-red<br>piping<br>red | 81 | | GT |
| 1A | A 911 521 603 07 | backrest<br>leatherette/<br>centre part<br>and<br>head rest<br>porsche lettering cloth | /L | 1 | |
| | LR6 | black/black | 84 | | |
| | LR7 | brown/brown | 84 | | |
| | LR8 | grey-beige/grey-beige | 84 | | |
| | PX1 | black/black | 85 | | |
| | PX3 | brown/brown | 85 | | |
| | QD8 | grey-beige/grey-beige | 85 | | |
| (1A) | A 911 521 604 07 | backrest<br>leatherette/<br>centre part<br>and<br>head rest<br>porsche lettering cloth | /R | 1 | |
| | LR6 | black/black | 84 | | |

| Pos | Part Number | Name | Remarks | Qty | Model |
|---|---|---|---|---|---|
| | LR7 | brown/brown | 84 | | |
| | LR8 | grey-beige/grey-beige | 84 | | |
| | PX1 | black/black | 85 | | |
| | PX3 | brown/brown | 85 | | |
| | QD8 | grey-beige/grey-beige | 85 | | |
| 1B | A 911 521 603 53 | backrest<br>leather | /L | 1 | |
| | 1AJ | black<br>F >>92DN4 02148<br>F >>93DN1 00189 | | | |
| | 2NF | beige | -82 | | |
| | 3NG | brown<br>F >>92DN4 02148<br>F >>93DN1 00189 | | | |
| | 6FL | grey-beige<br>F >>92DN4 02148<br>F >>93DN1 00189 | | | |
| | KZ2 | black<br>F 92DN4 02149>><br>F 93DN1 00190>> | | | |
| | KZ5 | brown<br>F 92DN4 02149>><br>F 93DN1 00190>> | | | |
| | KZ4 | grey-beige<br>F 92DN4 02149>><br>F 93DN1 00190>> | | | |
| (1B) | A 911 521 604 53 | backrest<br>leather | /R | 1 | |
| | 1AJ | black<br>F >>92DN4 02148<br>F >>93DN1 00189 | | | |
| | 2NF | beige | -82 | | |
| | 3NG | brown<br>F >>92DN4 02148<br>F >>93DN1 00189 | | | |
| | 6FL | grey-beige<br>F >>92DN4 02148<br>F >>93DN1 00189 | | | |
| | KZ2 | black<br>F 92DN4 02149>><br>F 93DN1 00190>> | | | |
| | KZ5 | brown<br>F 92DN4 02149>><br>F 93DN1 00190>> | | | |
| | KZ4 | grey-beige<br>F 92DN4 02149>><br>F 93DN1 00190>> | | | |
| 2 | 911 521 613 02 | backrest frame | /L | 1 | |
| (2) | 911 521 614 02 | backrest frame | /R | 1 | |
| 3 | 911 521 751 02 | foam part<br>backrest side part | | 2 | |
| 4 | E 911 521 104 02 | foam part<br>backrest cushion | | 2 | |
| 5 | A 911 521 072 06 | backrest side part cover<br>leatherette/<br>backrest surface<br>berber cloth | | 2 | |
| | GE9 | black/<br>grey/black<br>F >>92DN4 02148<br>F >>93DN1 00189 | | | |
| | FE3 | brown/<br>beige/brown<br>F >>92DN4 02148<br>F >>93DN1 00189 | | | |
| | FE4 | beige/<br>beige/brown | 81-82 | | |
| | JR8 | grey-beige/<br>grey-beige-grey<br>F >>92DN4 02148<br>F >>93DN1 00189 | | | |
| | JM3 | black/<br>grey/black<br>F 92DN4 02149>><br>F 93DN1 00190>> | | | |

| Pos | Part Number | Name | Remarks | Qty | Model |
|---|---|---|---|---|---|
| | JM4 | brown/<br>beige/brown<br>F 92DN4 02149>><br>F 93DN1 00190>> | | | |
| | JM9 | grey-beige/<br>grey-beige-grey<br>F 92DN4 02149>><br>F 93DN1 00190>> | | | |
| 5 | A 911 521 072 06 | backrest side part cover<br>leatherette/<br>backrest surface<br>porsche lettering cloth | | 2 | |
| | LR1 | black/black | 84 | | |
| | LR2 | brown/brown | 84 | | |
| | LR3 | grey-beige/grey-beige | 84 | | |
| | PX2 | black/black | 85 | | |
| | PX4 | brown/brown | 85 | | |
| | QD9 | grey-beige/grey-beige | 85 | | |
| 5 | A 911 521 072 06 | backrest side part cover<br>leatherette/<br>backrest surface in cloth<br>pin stripe velour | | 2 | |
| | GF4 | black/<br>black-red<br>piping<br>red | 81 | | GT |
| 5A | A 911 521 072 06 | backrest side part cover<br>leatherette/<br>head rest<br>porsche lettering cloth | | 2 | |
| | LR6 | black/black | 84 | | |
| | LR7 | brown/brown | 84 | | |
| | LR8 | grey-beige/grey-beige | 84 | | |
| | PX1 | black/black | 85 | | |
| | PX3 | brown/brown | 85 | | |
| | QD8 | grey-beige/grey-beige | 85 | | |

| Pos | Part Number | Name | Remarks | Qty | Model |
|---|---|---|---|---|---|
| 5B | A 911 521 072 70 | backrest side part cover<br>leather | | 2 | |
| | 1AJ | black<br>F >>92DN4 02148<br>F >>93DN1 00189 | | | |
| | 2NF | beige | -82 | | |
| | 3NG | brown<br>F >>92DN4 02148<br>F >>93DN1 00189 | | | |
| | 6FL | grey-beige<br>F >>92DN4 02148<br>F >>93DN1 00189 | | | |
| | KZ2 | black<br>F 92DN4 02149>><br>F 93DN1 00190>> | | | |
| | KZ5 | brown<br>F 92DN4 02149>><br>F 93DN1 00190>> | | | |
| | KZ4 | grey-beige<br>F 92DN4 02149>><br>F 93DN1 00190>> | | | |
| 6 | A 911 521 403 06 | backrest cushion cover<br>centre part<br>berber cloth | | 2 | |
| | 1GB | grey/black | 81- | | |
| | 8NB | beige/brown | 81- | | |
| | 1FB | grey-beige-grey | 83- | | |
| 6 | A 911 521 403 06 | backrest cushion cover<br>centre part<br>pin stripe velour | | 2 | |
| | 2LN | black-red | 81 | | GT |
| 6 | A 911 521 403 06 | backrest cushion cover<br>centre part<br>porsche lettering cloth | | 2 | |
| | 4CR | black | 84 | | |
| | 6TR | brown | 84 | | |
| | 8RR | grey-beige | 84 | | |

| Pos | Part Number | Name | Remarks | Qty | Model |
|---|---|---|---|---|---|
| | 2CZ | black | 85 | | |
| | 7NZ | brown/brown | 85 | | |
| | 5UY | grey-beige | 85 | | |
| 6A | A 911 521 403 50 | backrest cushion cover<br>centre part<br>leather | | 2 | |
| | 1AJ | black<br>F >>92DN4 02148<br>F >>93DN1 00189 | | | |
| | 2NF | beige | -82 | | |
| | 3NG | brown<br>F >>92DN4 02148<br>F >>93DN1 00189 | | | |
| | 6FL | grey-beige<br>F >>92DN4 02148<br>F >>93DN1 00189 | | | |
| | KZ2 | black<br>F 92DN4 02149>><br>F 93DN1 00190>> | | | |
| | KZ5 | brown<br>F 92DN4 02149>><br>F 93DN1 00190>> | | | |
| | KZ4 | grey-beige<br>F 92DN4 02149>><br>F 93DN1 00190>> | | | |
| 7 | E 911 521 575 00 | cover | | 2 | |
| 8 | 911 521 361 00 | cable<br>release<br>backrest | | 2 | |
| 9 | 911 521 369 00 | terminal<br>cable | | 2 | |
| 10 | 911 521 343 00 | guide bush | | 2 | |
| 11 | 311 881 247 | clamp | | 2 | |
| 12 | 311 881 287 A | spring | | 2 | |
| 13 | 911 521 815 00 | rose | | 2 | |
| | 01C | satin black | | | |
| 14 | 911 521 817 00 | control button | | 2 | |
| | 01C | satin black | | | |

- -- E N D -- -

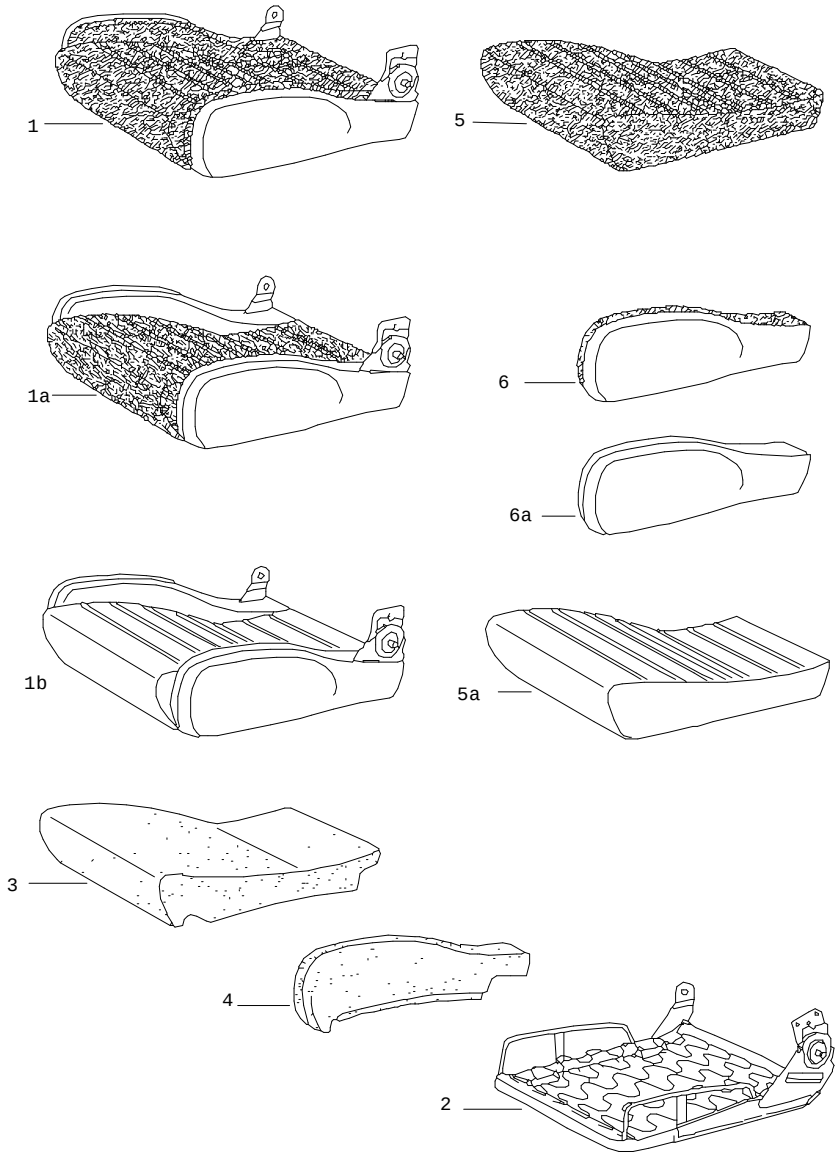


| Pos | Part Number | Name | Remarks | Qty | Model |
|---|---|---|---|---|---|
| | | sports seat<br>cushion<br>and<br>single parts | | | |
| 1 | A 911 521 605 06 | seat cushion<br>complete<br>leatherette/<br>seat surface<br>berber cloth | /L | 1 | |
| | GE9 | black/<br>grey/black<br>F >>92DN4 02148<br>F >>93DN1 00189 | | | 924<br>TURBO |
| | FE3 | brown/<br>beige/brown<br>F >>92DN4 02148<br>F >>93DN1 00189 | | | 924<br>TURBO |
| | FE4 | beige/<br>beige/brown | 81-82 | | |
| | JR8 | grey-beige/<br>grey-beige-grey<br>F >>92DN4 02148<br>F >>93DN1 00189 | | | 924<br>TURBO |
| | JM3 | black/<br>grey/black<br>F 92DN4 02149>><br>F 93DN1 00190>> | | | 924<br>TURBO |
| | JM4 | brown/<br>beige/brown<br>F 92DN4 02149>><br>F 93DN1 00190>> | | | 924<br>TURBO |
| | JM9 | grey-beige/<br>grey-beige-grey<br>F 92DN4 02149>><br>F 93DN1 00190>> | | | 924<br>TURBO |
| (1) | A 911 521 606 06 | seat cushion<br>complete<br>leatherette/<br>seat surface<br>berber cloth | /R | 1 | |
| | GE9 | black/<br>grey/black<br>F >>92DN4 02148<br>F >>93DN1 00189 | | | 924<br>TURBO |

| Pos | Part Number | Name | Remarks | Qty | Model |
|---|---|---|---|---|---|
| | FE3 | brown/<br>beige/brown<br>F >>92DN4 02148<br>F >>93DN1 00189 | | | 924<br>TURBO |
| | FE4 | beige/<br>beige/brown | 81-82 | | |
| | JR8 | grey-beige/<br>grey-beige-grey<br>F >>92DN4 02148<br>F >>93DN1 00189 | | | 924<br>TURBO |
| | JM3 | black/<br>grey/black<br>F 92DN4 02149>><br>F 93DN1 00190>> | | | 924<br>TURBO |
| | JM4 | brown/<br>beige/brown<br>F 92DN4 02149>><br>F 93DN1 00190>> | | | 924<br>TURBO |
| | JM9 | grey-beige/<br>grey-beige-grey<br>F 92DN4 02149>><br>F 93DN1 00190>> | | | 924<br>TURBO |
| 1 | A 911 521 605 06 | seat cushion<br>leatherette/<br>seat surface<br>pin stripe velour | /L | 1 | |
| | GF4 | black/<br>black-red<br>piping<br>red | 81 | | GT |
| (1) | A 911 521 606 06 | seat cushion<br>leatherette/<br>seat surface<br>pin stripe velour | /R | 1 | |
| | GF4 | black/<br>black-red<br>piping<br>red | 81 | | GT |
| 1 | A 911 521 605 06 | seat cushion<br>leatherette/<br>seat surface<br>porsche lettering cloth | /L | 1 | |
| | LR1 | black/black | 84 | | |
| | LR2 | brown/brown | 84 | | |
| | LR3 | grey-beige/grey-beige | 84 | | |
| | PX2 | black/black | 85 | | |
| | PX4 | brown/brown | 85 | | |
| | QD9 | grey-beige/grey-beige | 85 | | |
| (1) | A 911 521 606 06 | seat cushion<br>leatherette/<br>seat surface<br>porsche lettering cloth | /R | 1 | |
| | LR1 | black/black | 84 | | |
| | LR2 | brown/brown | 84 | | |
| | LR3 | grey-beige/grey-beige | 84 | | |
| | PX2 | black/black | 85 | | |
| | PX4 | brown/brown | 85 | | |
| | QD9 | grey-beige/grey-beige | 85 | | |
| 1A | A 911 521 605 06 | seat cushion<br>complete<br>leatherette/<br>centre part<br>porsche lettering cloth | /L | 1 | |
| | LR6 | black/black | 84 | | |
| | LR7 | brown/brown | 84 | | |
| | LR8 | grey-beige/grey-beige | 84 | | |
| | PX1 | black/black | 85 | | |
| | PX3 | brown/brown | 85 | | |
| | QD8 | grey-beige/grey-beige | 85 | | |
| (1A) | A 911 521 606 06 | seat cushion<br>complete<br>leatherette/<br>centre part<br>porsche lettering cloth | /R | 1 | |
| | LR6 | black/black | 84 | | |
| | LR7 | brown/brown | 84 | | |

| Pos | Part Number | Name | Remarks | Qty | Model |
|---|---|---|---|---|---|
| | LR8 | grey-beige/grey-beige | 84 | | |
| | PX1 | black/black | 85 | | |
| | PX3 | brown/brown | 85 | | |
| | QD8 | grey-beige/grey-beige | 85 | | |
| 1B | A 911 521 605 50 | seat cushion<br>complete<br>leather | /L | 1 | |
| | 1AJ | black<br>F >>92DN4 02148<br>F >>93DN1 00189 | | | 924<br>TURBO |
| | 2NF | beige | -82 | | |
| | 3NG | brown<br>F >>92DN4 02148<br>F >>93DN1 00189 | | | 924<br>TURBO |
| | 6FL | grey-beige<br>F >>92DN4 02148<br>F >>93DN1 00189 | | | 924<br>TURBO |
| | KZ2 | black<br>F 92DN4 02149>><br>F 93DN1 00190>> | | | 924<br>TURBO |
| | KZ5 | brown<br>F 92DN4 02149>><br>F 93DN1 00190>> | | | 924<br>TURBO |
| | KZ4 | grey-beige<br>F 92DN4 02149>><br>F 93DN1 00190>> | | | 924<br>TURBO |
| (1B) | A 911 521 606 50 | seat cushion<br>complete<br>leather | /R | 1 | |
| | 1AJ | black<br>F >>92DN4 02148<br>F >>93DN1 00189 | | | 924<br>TURBO |
| | 2NF | beige | -82 | | |
| | 3NG | brown<br>F >>92DN4 02148<br>F >>93DN1 00189 | | | 924<br>TURBO |

| Pos | Part Number | Name | Remarks | Qty | Model |
|---|---|---|---|---|---|
| | 6FL | grey-beige<br>F >>92DN4 02148<br>F >>93DN1 00189 | | | 924<br>TURBO |
| | KZ2 | black<br>F 92DN4 02149>><br>F 93DN1 00190>> | | | 924<br>TURBO |
| | KZ5 | brown<br>F 92DN4 02149>><br>F 93DN1 00190>> | | | 924<br>TURBO |
| | KZ4 | grey-beige<br>F 92DN4 02149>><br>F 93DN1 00190>> | | | 924<br>TURBO |
| 2 | 911 521 621 01 | seat frame | /L | 1 | |
| (2) | E 911 521 622 01 | seat frame | /R | 1 | |
| 3 | E 911 521 697 02 | foam part<br>seat cushion | | 2 | |
| 4 | 911 521 683 02 | foam part<br>cushion<br>left seat | /L | 1 | |
| (4) | 911 521 654 02 | foam part<br>cushion<br>left seat | /R | 1 | |
| (4) | 911 521 653 02 | foam part<br>cushion<br>right seat | /L | 1 | |
| (4) | E 911 521 684 02 | foam part<br>cushion<br>right seat | /R | 1 | |
| 5 | A 911 521 439 06 | cover for cushion<br>berber cloth | | 2 | |
| | 1GB | grey/black | 81- | | |
| | 8NB | beige/brown | 81- | | |
| | 1FB | grey-beige-grey | 83- | | |
| 5 | A 911 521 439 06 | cover for cushion<br>pin stripe velour | | 2 | |
| | 2LN | black-red | 81 | | GT |

| Pos | Part Number | Name | Remarks | Qty | Model |
|---|---|---|---|---|---|
| 5 | A 911 521 439 06 | cover for cushion<br>porsche lettering cloth | | 2 | |
| | 4CR | black | 84 | | |
| | 6TR | brown | 84 | | |
| | 8RR | grey-beige | 84 | | |
| | 2CZ | black | 85 | | |
| | 7NZ | brown | 85 | | |
| | 5UY | grey-beige | 85 | | |
| 5A | A 911 521 439 50 | cover for cushion<br>leather | | 2 | |
| | 1AJ | black<br>F >>92DN4 02148<br>F >>93DN1 00189 | | | 924<br>TURBO |
| | 2NF | beige | -82 | | |
| | 3NG | brown<br>F >>92DN4 02148<br>F >>93DN1 00189 | | | 924<br>TURBO |
| | 6FL | grey-beige<br>F >>92DN4 02148<br>F >>93DN1 00189 | | | 924<br>TURBO |
| | KZ2 | black<br>F 92DN4 02149>><br>F 93DN1 00190>> | | | 924<br>TURBO |
| | KZ5 | brown<br>F 92DN4 02149>><br>F 93DN1 00190>> | | | 924<br>TURBO |
| | KZ4 | grey-beige<br>F 92DN4 02149>><br>F 93DN1 00190>> | | | 924<br>TURBO |
| 6 | A 911 521 631 06 | seat side part cover<br>left seat<br>leatherette/<br>seat surface<br>berber cloth | /L | 1 | |
| | GE9 | black/<br>grey/black<br>F >>92DN4 02148<br>F >>93DN1 00189 | | | 924<br>TURBO |
| | FE3 | brown/<br>beige/brown<br>F >>92DN4 02148<br>F >>93DN1 00189 | | | 924<br>TURBO |
| | FE4 | beige/<br>beige/brown | 81-82 | | |
| | JR8 | grey-beige/<br>grey-beige-grey<br>F >>92DN4 02148<br>F >>93DN1 00189 | | | 924<br>TURBO |
| | JM3 | black/<br>grey/black<br>F 92DN4 02149>><br>F 93DN1 00190>> | | | 924<br>TURBO |
| | JM4 | brown/<br>beige/brown<br>F 92DN4 02149>><br>F 93DN1 00190>> | | | 924<br>TURBO |
| | JM9 | grey-beige/<br>grey-beige-grey<br>F 92DN4 02149>><br>F 93DN1 00190>> | | | 924<br>TURBO |
| (6) | A 911 521 632 06 | seat side part cover<br>left seat<br>leatherette/<br>seat surface<br>berber cloth | /R | 1 | |
| | GE9 | black/<br>grey/black<br>F >>92DN4 02148<br>F >>93DN1 00189 | | | 924<br>TURBO |
| | FE3 | brown/<br>beige/brown<br>F >>92DN4 02148<br>F >>93DN1 00189 | | | 924<br>TURBO |
| | FE4 | beige/<br>beige/brown | 81-82 | | |
| | JR8 | grey-beige/<br>grey-beige-grey<br>F >>92DN4 02148<br>F >>93DN1 00189 | | | 924<br>TURBO |

| Pos | Part Number | Name | Remarks | Qty | Model |
|---|---|---|---|---|---|
| | JM3 | black/<br>grey/black<br>F 92DN4 02149>><br>F 93DN1 00190>> | | | <br><br>924<br>TURBO |
| | JM4 | brown/<br>beige/brown<br>F 92DN4 02149>><br>F 93DN1 00190>> | | | <br><br>924<br>TURBO |
| | JM9 | grey-beige/<br>grey-beige-grey<br>F 92DN4 02149>><br>F 93DN1 00190>> | | | <br><br>924<br>TURBO |
| (6) | A 911 521 633 06 | seat side part cover<br>right seat<br>leatherette/<br>seat surface<br>berber cloth | /L | 1 | |
| | GE9 | black/<br>grey/black<br>F >>92DN4 02148<br>F >>93DN1 00189 | | | <br><br>924<br>TURBO |
| | FE3 | brown/<br>beige/brown<br>F >>92DN4 02148<br>F >>93DN1 00189 | | | <br><br>924<br>TURBO |
| | FE4 | beige/<br>beige/brown | 81-82 | | |
| | JR8 | grey-beige/<br>grey-beige-grey<br>F >>92DN4 02148<br>F >>93DN1 00189 | | | <br><br>924<br>TURBO |
| | JM3 | black/<br>grey/black<br>F 92DN4 02149>><br>F 93DN1 00190>> | | | <br><br>924<br>TURBO |
| | JM4 | brown/<br>beige/brown<br>F 92DN4 02149>><br>F 93DN1 00190>> | | | <br><br>924<br>TURBO |
| | JM9 | grey-beige/<br>grey-beige-grey<br>F 92DN4 02149>><br>F 93DN1 00190>> | | | <br><br>924<br>TURBO |
| (6) | A 911 521 634 06 | seat side part cover<br>right seat<br>leatherette/<br>seat surface<br>berber cloth | /R | 1 | |
| | GE9 | black/<br>grey/black<br>F >>92DN4 02148<br>F >>93DN1 00189 | | | <br><br>924<br>TURBO |
| | FE3 | brown/<br>beige/brown<br>F >>92DN4 02148<br>F >>93DN1 00189 | | | <br><br>924<br>TURBO |
| | FE4 | beige/<br>beige/brown | 81-82 | | |
| | JR8 | grey-beige/<br>grey-beige-grey<br>F >>92DN4 02148<br>F >>93DN1 00189 | | | <br><br>924<br>TURBO |
| | JM3 | black/<br>grey/black<br>F 92DN4 02149>><br>F 93DN1 00190>> | | | <br><br>924<br>TURBO |
| | JM4 | brown/<br>beige/brown<br>F 92DN4 02149>><br>F 93DN1 00190>> | | | <br><br>924<br>TURBO |
| | JM9 | grey-beige/<br>grey-beige-grey<br>F 92DN4 02149>><br>F 93DN1 00190>> | | | <br><br>924<br>TURBO |
| 6 | A 911 521 631 06 | seat side part cover<br>left seat<br>leatherette/<br>seat surface<br>pin stripe velour | /L | 1 | |
| | GF4 | black/<br>black-red | 81 | | GT |
| (6) | A 911 521 632 06 | seat side part cover<br>left seat<br>leatherette/<br>seat surface<br>pin stripe velour | /R | 1 | |

| Pos | Part Number | Name | Remarks | Qty | Model |
|---|---|---|---|---|---|
| | GF4 | black/<br>black-red | 81 | | GT |
| (6) | A 911 521 633 06 | seat side part cover<br>right seat<br>leatherette/<br>seat surface<br>pin stripe velour | /L | 1 | |
| | GF4 | black/<br>black-red | 81 | | GT |
| (6) | A 911 521 634 06 | seat side part cover<br>right seat<br>leatherette/<br>seat surface<br>pin stripe velour | /R | 1 | |
| | GF4 | black/<br>black-red | 81 | | GT |
| 6 | A 911 521 631 06 | seat side part cover<br>left seat<br>leatherette/<br>seat surface<br>porsche lettering cloth | /L | 1 | |
| | LR1 | black/black | 84 | | |
| | LR2 | brown/brown | 84 | | |
| | LR3 | grey-beige/grey-beige | 84 | | |
| | PX2 | black/black | 85 | | |
| | PX4 | brown/brown | 85 | | |
| | QD9 | grey-beige/grey-beige | 85 | | |
| (6) | A 911 521 632 06 | seat side part cover<br>left seat<br>leatherette/<br>seat surface<br>porsche lettering cloth | /R | 1 | |
| | LR1 | black/black | 84 | | |
| | LR2 | brown/brown | 84 | | |
| | LR3 | grey-beige/grey-beige | 84 | | |
| | PX2 | black/black | 85 | | |
| | PX4 | brown/brown | 85 | | |
| | QD9 | grey-beige/grey-beige | 85 | | |
| (6) | A 911 521 633 06 | seat side part cover<br>right seat<br>leatherette/<br>seat surface<br>porsche lettering cloth | /L | 1 | |
| | LR1 | black/black | 84 | | |
| | LR2 | brown/brown | 84 | | |
| | LR3 | grey-beige/grey-beige | 84 | | |
| | PX2 | black/black | 85 | | |
| | PX4 | brown/brown | 85 | | |
| | QD9 | grey-beige/grey-beige | 85 | | |
| (6) | A 911 521 634 06 | seat side part cover<br>right seat<br>leatherette/<br>seat surface<br>porsche lettering cloth | /R | 1 | |
| | LR1 | black/black | 84 | | |
| | LR2 | brown/brown | 84 | | |
| | LR3 | grey-beige/grey-beige | 84 | | |
| | PX2 | black/black | 85 | | |
| | PX4 | brown/brown | 85 | | |
| | QD9 | grey-beige/grey-beige | 85 | | |
| 6A | A 911 521 631 06 | seat side part cover<br>left seat<br>leatherette | /L | 1 | |
| | LR6 | black | 84 | | |
| | LR7 | brown | 84 | | |
| | LR8 | grey-beige | 84 | | |
| | PX1 | black | 85 | | |
| | PX3 | brown | 85 | | |
| | QD8 | grey-beige | 85 | | |

| Pos | Part Number | Name | Remarks | Qty | Model |
|---|---|---|---|---|---|
| (6A) | A 911 521 632 06 | seat side part cover<br>left seat<br>leatherette | /R | 1 | |
| | LR6 | black | 84 | | |
| | LR7 | brown | 84 | | |
| | LR8 | grey-beige | 84 | | |
| | PX1 | black | 85 | | |
| | PX3 | brown | 85 | | |
| | QD8 | grey-beige | 85 | | |
| (6A) | A 911 521 633 06 | seat side part cover<br>right seat<br>leatherette | /L | 1 | |
| | LR6 | black | 84 | | |
| | LR7 | brown | 84 | | |
| | LR8 | grey-beige | 84 | | |
| | PX1 | black | 85 | | |
| | PX3 | brown | 85 | | |
| | QD8 | grey-beige | 85 | | |
| (6A) | A 911 521 634 06 | seat side part cover<br>right seat<br>leatherette | /R | 1 | |
| | LR6 | black | 84 | | |
| | LR7 | brown | 84 | | |
| | LR8 | grey-beige | 84 | | |
| | PX1 | black | 85 | | |
| | PX3 | brown | 85 | | |
| | QD8 | grey-beige | 85 | | |
| 6A | A 911 521 631 50 | seat side part cover<br>left seat<br>leather | /L | 1 | |
| | 1AJ | black<br>F >>92DN4 02148<br>F >>93DN1 00189 | | | 924<br>TURBO |
| | 2NF | beige | -82 | | |
| | 3NG | brown<br>F >>92DN4 02148<br>F >>93DN1 00189 | | | 924<br>TURBO |
| | 6FL | grey-beige<br>F >>92DN4 02148<br>F >>93DN1 00189 | | | 924<br>TURBO |
| | KZ2 | black<br>F 92DN4 02149>><br>F 93DN1 00190>> | | | 924<br>TURBO |
| | KZ5 | brown<br>F 92DN4 02149>><br>F 93DN1 00190>> | | | 924<br>TURBO |
| | KZ4 | grey-beige<br>F 92DN4 02149>><br>F 93DN1 00190>> | | | 924<br>TURBO |
| (6A) | A 911 521 632 50 | seat side part cover<br>left seat<br>leather | /R | 1 | |
| | 1AJ | black<br>F >>92DN4 02148<br>F >>93DN1 00189 | | | 924<br>TURBO |
| | 2NF | beige | -82 | | |
| | 3NG | brown<br>F >>92DN4 02148<br>F >>93DN1 00189 | | | 924<br>TURBO |
| | 6FL | grey-beige<br>F >>92DN4 02148<br>F >>93DN1 00189 | | | 924<br>TURBO |
| | KZ2 | black<br>F 92DN4 02149>><br>F 93DN1 00190>> | | | 924<br>TURBO |
| | KZ5 | brown<br>F 92DN4 02149>><br>F 93DN1 00190>> | | | 924<br>TURBO |

| Pos | Part Number | Name | Remarks | Qty | Model |
|---|---|---|---|---|---|
| | KZ4 | grey-beige<br>F 92DN4 02149>><br>F 93DN1 00190>> | | | 924<br>TURBO |
| (6A) | A 911 521 633 50 | seat side part cover<br>right seat<br>leather | /L | 1 | |
| | 1AJ | black<br>F >>92DN4 02148<br>F >>93DN1 00189 | | | 924<br>TURBO |
| | 2NF | beige | -82 | | |
| | 3NG | brown<br>F >>92DN4 02148<br>F >>93DN1 00189 | | | 924<br>TURBO |
| | 6FL | grey-beige<br>F >>92DN4 02148<br>F >>93DN1 00189 | | | 924<br>TURBO |
| | KZ2 | black<br>F 92DN4 02149>><br>F 93DN1 00190>> | | | 924<br>TURBO |
| | KZ5 | brown<br>F 92DN4 02149>><br>F 93DN1 00190>> | | | 924<br>TURBO |
| | KZ4 | grey-beige<br>F 92DN4 02149>><br>F 93DN1 00190>> | | | 924<br>TURBO |
| (6A) | A 911 521 634 50 | seat side part cover<br>right seat<br>leather | /R | 1 | |
| | 1AJ | black<br>F >>92DN4 02148<br>F >>93DN1 00189 | | | 924<br>TURBO |
| | 2NF | beige | -82 | | |
| | 3NG | brown<br>F >>92DN4 02148<br>F >>93DN1 00189 | | | 924<br>TURBO |
| | 6FL | grey-beige<br>F >>92DN4 02148<br>F >>93DN1 00189 | | | 924<br>TURBO |
| | KZ2 | black<br>F 92DN4 02149>><br>F 93DN1 00190>> | | | 924<br>TURBO |
| | KZ5 | brown<br>F 92DN4 02149>><br>F 93DN1 00190>> | | | 924<br>TURBO |
| | KZ4 | grey-beige<br>F 92DN4 02149>><br>F 93DN1 00190>> | | | 924<br>TURBO |

- -- E N D -- -

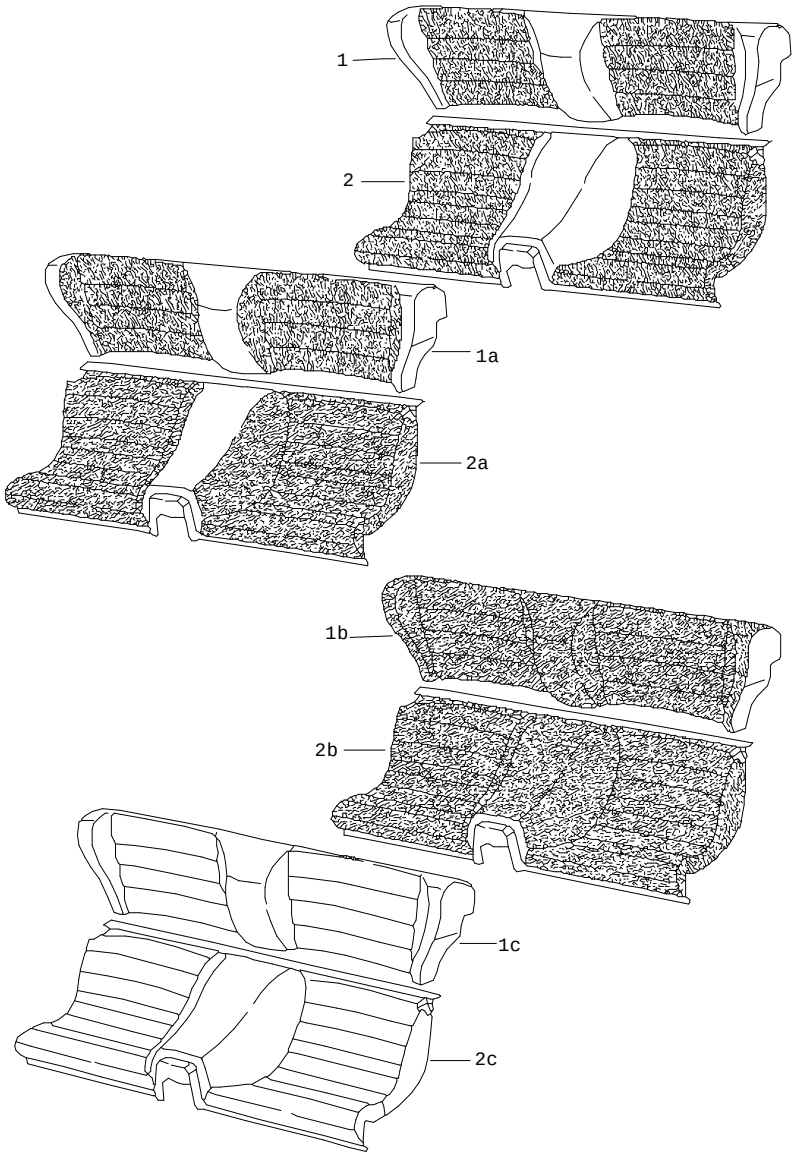


| Pos | Part Number | Name | Remarks | Qty | Model |
|---|---|---|---|---|---|
| | | back seat | | | |
| 1 | A 477 885 037 D | backrest<br>leatherette/<br>centre part in cloth<br>FISCHGRAET<br>carpet | | 1 | |
| | DC3 | beige/<br>brown-beige<br>beige | -80 | | |
| | DC6 | brown/<br>brown-beige<br>brown | -80 | | |
| | DC8 | black/<br>orange<br>black | -80 | | |
| 1 | A 477 885 037 D | backrest<br>leatherette/<br>centre part in cloth<br>pin stripe velour<br>carpet | | 1 | |
| | FD5 | black/<br>black-white<br>black<br>F >>92CN4 06384<br>F >>93CN1 00861 | | | 924<br>TURBO |
| | FD6 | brown/<br>brown-beige<br>brown<br>F >>92CN4 06384<br>F >>93CN1 00861 | | | 924<br>TURBO |
| | FD7 | beige/<br>brown-beige<br>beige<br>F >>92CN4 06384<br>F >>93CN1 00861 | | | 924<br>TURBO |
| | GM4 | black/<br>black-white<br>black<br>piping<br>white<br>special model<br>"LE MANS" | 81 | | |

| Pos | Part Number | Name | Remarks | Qty | Model |
|---|---|---|---|---|---|
| 1 | A 477 885 037 D | backrest<br>leatherette/<br>centre part in cloth<br>tartan cloth<br>carpet | | 1 | |
| | EN3 | black/<br>red-blue<br>black | | | |
| | EP1 | black/<br>green-blue<br>black | | | |
| | EP2 | brown/<br>brown-beige<br>brown | | | |
| | EP3 | beige/<br>brown-beige<br>beige | | | |
| 1 | A 477 885 037 D | backrest<br>leatherette/<br>centre part in cloth<br>checker board velour<br>carpet | | 1 | |
| | FD8 | black/<br>grey/black<br>black<br>F >>92CN4 06384<br>F >>93CN1 00861 | | | 924<br>TURBO |
| | FD9 | brown/<br>beige/brown<br>brown<br>F >>92CN4 07430<br>F >>93CN1 00932 | | | 924<br>TURBO |
| | FE1 | beige/<br>beige/brown<br>beige<br>F >>92CN4 07430<br>F >>93CN1 00932 | | | 924<br>TURBO |
| 1 | A 477 885 037 D | backrest<br>leatherette/<br>centre part in cloth<br>stripe design<br>carpet | | 1 | M 402 |
| | HS9 | black/<br>silver-black<br>light grey | | | |
| 1A | A 477 885 037 D | backrest<br>leatherette/<br>centre part<br>and<br>backrest side part<br>pin stripe velour<br>carpet | | 1 | |
| | GF4 | black/<br>black-red<br>black<br>piping<br>red | 81 | | GT |
| 1B | A 477 885 037 D | backrest<br>leatherette/<br>backrest surface<br>berber cloth<br>carpet | | 1 | |
| | GE9 | black/<br>grey/black<br>black<br>F >>92CN4 06384<br>F >>93CN1 00861 | 81- | | 924<br>TURBO |
| | FE3 | brown/<br>beige/brown<br>brown<br>F >>92CN4 07430<br>F >>93CN1 00932 | 81- | | 924<br>TURBO |
| | FE4 | beige/<br>beige/brown<br>beige<br>F >>92CN4 07430<br>F >>93CN1 00932 | 81- | | 924<br>TURBO |
| 1B | A 477 885 037 D | backrest | | 1 | |
| 1C | A 477 885 037 D | backrest<br>leatherette/<br>carpet | | 1 | |
| | DD2 | beige/<br>beige<br>F >>92CN4 07430<br>F >>93CN1 00932 | | | 924<br>TURBO |

| Pos | Part Number | Name | Remarks | Qty | Model |
|---|---|---|---|---|---|
| | DD4 | brown/<br>brown<br>F >>92CN4 07430<br>F >>93CN1 00932 | | | 924<br>TURBO |
| | DD6 | black/<br>black<br>F >>92CN4 06384<br>F >>93CN1 00861 | | | 924<br>TURBO |
| (1) | A 477 885 037 E | backrest<br>leatherette/<br>centre part in cloth<br>FISCHGRAET<br>carpet | | 1 | (AUS) |
| | DC3 | beige/<br>brown-beige<br>beige | -80 | | |
| | DC6 | brown/<br>brown-beige<br>brown | -80 | | |
| | DC8 | black/<br>orange<br>black | -80 | | |
| (1) | A 477 885 037 E | backrest<br>leatherette/<br>centre part in cloth<br>pin stripe velour<br>carpet | | 1 | (AUS) |
| | FD5 | black/<br>black-white<br>black<br>F >>92CN4 06384<br>F >>93CN1 00861 | | | 924<br>TURBO |
| | FD6 | brown/<br>brown-beige<br>brown<br>F >>92CN4 07430<br>F >>93CN1 00932 | | | 924<br>TURBO |
| | FD7 | beige/<br>brown-beige<br>beige<br>F >>92CN4 07430<br>F >>93CN1 00932 | | | 924<br>TURBO |

| Pos | Part Number | Name | Remarks | Qty | Model |
|---|---|---|---|---|---|
| | GM4 | black/<br>black-white<br>black<br>piping<br>white<br>special model<br>"LE MANS" | 81 | | |
| (1) | A 477 885 037 E | backrest<br>leatherette/<br>centre part in cloth<br>tartan cloth<br>carpet | | 1 | (AUS) |
| | EN3 | black/<br>red-blue<br>black | -80 | | |
| | EP1 | black/<br>green-blue<br>black | -80 | | |
| | EP2 | brown/<br>brown-beige<br>brown | -80 | | |
| | EP3 | beige/<br>brown-beige<br>beige | -80 | | |
| (1) | A 477 885 037 E | backrest<br>leatherette/<br>centre part in cloth<br>checker board velour<br>carpet | | 1 | (AUS) |
| | FD8 | black/<br>grey/black<br>black<br>F >>92CN4 06384<br>F >>93CN1 00861 | | | 924<br>TURBO |
| | FD9 | brown/<br>beige/brown<br>brown<br>F >>92CN4 07430<br>F >>93CN1 00932 | | | 924<br>TURBO |
| | FE1 | beige/<br>beige/brown<br>beige<br>F >>92CN4 07430<br>F >>93CN1 00932 | | | 924<br>TURBO |

| Pos | Part Number | Name | Remarks | Qty | Model |
|---|---|---|---|---|---|
| (1B) | A 477 885 037 E | backrest<br>leatherette/<br>backrest surface<br>berber cloth<br>carpet | | 1 | (AUS) |
| | GE9 | black/<br>grey/black<br>black<br>F >>92CN4 06384<br>F >>93CN1 00861 | 81- | | <br><br><br>924<br>TURBO |
| | FE3 | brown/<br>beige/brown<br>brown<br>F >>92CN4 07430<br>F >>93CN1 00932 | 81- | | <br><br><br>924<br>TURBO |
| | FE4 | beige/<br>beige/brown<br>beige<br>F >>92CN4 07430<br>F >>93CN1 00932 | 81- | | <br><br><br>924<br>TURBO |
| (1C) | A 477 885 037 E | backrest<br>leatherette/<br>carpet | | 1 | (AUS) |
| | DD2 | beige/<br>beige<br>F >>92CN4 07430<br>F >>93CN1 00932 | | | <br><br>924<br>TURBO |
| | DD4 | brown/<br>brown<br>F >>92CN4 07430<br>F >>93CN1 00932 | | | <br><br>924<br>TURBO |
| | DD6 | black/<br>black<br>F >>92CN4 06384<br>F >>93CN1 00861 | | | <br><br>924<br>TURBO |
| 1 | 477 885 045 C | backrest<br>leatherette/<br>centre part in cloth<br>pin stripe velour | | 1 | |
| | KU8 | black/<br>black-red<br>piping<br>black<br>special model | <br><br><br><br>82 | | <br><br><br><br>924 (CH) |
| | FD5 | black/<br>black-white<br>F 92CN4 06385>>92DN4 02148<br>F 93CN1 00862>>93DN1 00189 | | | <br><br>924<br>TURBO |
| | FD6 | brown/<br>brown-beige<br>F 92CN4 07431>>92DN4 02148<br>F 93CN1 00933>>93DN1 00189 | | | <br><br>924<br>TURBO |
| | FD7 | beige/<br>brown-beige<br>F 92CN4 07431>>92CN4 9999<br>F 93CN1 00933>>93CN1 9999 | | | <br><br>924<br>TURBO |
| | JR7 | grey-beige/<br>grey-beige-white<br>F >>92DN4 02148<br>F >>93DN1 00189 | | | |
| | JN1 | black/<br>black-white<br>F 92DN4 02149>><br>F 93DN1 00190>> | | | <br><br>924<br>TURBO |
| | JN2 | brown/<br>brown-beige<br>F 92DN4 02149>><br>F 93DN1 00190>> | | | <br><br>924<br>TURBO |
| | LD4 | grey-beige/<br>grey-beige-white<br>F 92DN4 02149>><br>F 93DN1 00190>> | | | <br><br>924<br>TURBO |
| 1 | 477 885 045 C | backrest<br>leatherette/<br>centre part in cloth<br>checker board velour | | 1 | |
| | FD8 | black/<br>grey/black | -82 | | |
| | FD9 | brown/<br>beige/brown<br>F 92CN4 07431>>92CN4 9999<br>F 93CN1 00933>>93CN1 9999 | | | <br><br>924<br>TURBO |
| | FE1 | beige/<br>beige/brown<br>F 92CN4 07431>>92CN4 9999<br>F 93CN1 00933>>93CN1 9999 | | | <br><br>924<br>TURBO |

| Pos | Part Number | Name | Remarks | Qty | Model |
|---|---|---|---|---|---|
| | JR4 | black/<br>light grey-black<br>F >>92DN4 02148<br>F >>93DN1 00189 | | | |
| | JR5 | brown/<br>brown-grey<br>F >>92DN4 02148<br>F >>93DN1 00189 | | | |
| | JR6 | grey-beige/<br>brown-grey<br>F >>92DN4 02148<br>F >>93DN1 00189 | | | |
| | LD5 | black/<br>light grey-black<br>F 92DN4 02149>><br>F 93DN1 00190>> | | | 924<br>TURBO |
| | LD6 | brown/<br>brown-grey<br>F 92DN4 02149>><br>F 93DN1 00190>> | | | 924<br>TURBO |
| | LD7 | grey-beige/<br>brown-grey<br>F 92DN4 02149>><br>F 93DN1 00190>> | | | 924<br>TURBO |
| 1B | 477 885 045 C | backrest<br>leatherette/<br>backrest surface<br>berber cloth | | 1 | |
| | GE9 | black/<br>grey/black<br>F >>92CN4 06384<br>F >>93CN1 00861 | | | 924<br>TURBO |
| | FE3 | brown/<br>beige/brown<br>F >>92CN4 06384<br>F >>93CN1 00861 | | | 924<br>TURBO |
| | FE4 | beige/<br>beige/brown<br>F 92CN4 07431>>92CN4 9999<br>F 93CN1 00933>>93CN1 9999 | | | 924<br>TURBO |
| | JR8 | grey-beige/<br>grey-beige-grey | 83- | | |

| Pos | Part Number | Name | Remarks | Qty | Model |
|---|---|---|---|---|---|
| 1C | 477 885 045 C | backrest<br>leatherette | | 1 | |
| | DD6 | black<br>F 92CN4 06385>>92DN4 02148<br>F 93CN1 00862>>93DN1 00189 | | | 924<br>TURBO |
| | DD4 | brown<br>F 92CN4 07431>>92DN4 02148<br>F 93CN1 00933>>93DN1 00189 | | | 924<br>TURBO |
| | DD2 | beige<br>F 92CN4 07431>>92CN4 9999<br>F 93CN1 00933>>93CN1 9999 | | | 924<br>TURBO |
| | 4FK | grey-beige<br>F >>92DN4 02148<br>F >>93DN1 00189 | | | |
| | JN3 | black<br>F 92DN4 02149>><br>F 93DN1 00190>> | | | 924<br>TURBO |
| | JN4 | brown<br>F 92DN4 02149>><br>F 93DN1 00190>> | | | 924<br>TURBO |
| | JN5 | grey-beige<br>F 92DN4 02149>><br>F 93DN1 00190>> | | | 924<br>TURBO |
| 1 | 944 522 045 00 | backrest<br>leatherette/<br>centre part in cloth<br>pin stripe velour | 84- | 1 | |
| | JN1 | black/<br>black-white | | | |
| | JN2 | brown/<br>brown-beige | | | |
| | LD4 | grey-beige/<br>grey-beige-white<br><br>centre part in cloth<br>checker board velour | | | |
| 1 | 944 522 045 00 | backrest<br>leatherette/ | 84- | 1 | |
| | LD5 | black/<br>light grey-black | | | |

| Pos | Part Number | Name | Remarks | Qty | Model |
|---|---|---|---|---|---|
| | LD6 | brown/<br>brown-grey | | | |
| | LD7 | grey-beige/<br>brown-grey | | | |
| 1 | 944 522 045 00 | backrest<br>leatherette/<br>centre part<br>porsche lettering cloth | 84- | 1 | |
| | LR6 | black/black | 84 | | |
| | LR7 | brown/brown | 84 | | |
| | LR8 | grey-beige/grey-beige | 84 | | |
| | NC3 | black/<br>anthracite-burgundy<br>special model | 84 | | TURBO (I) |
| | PX1 | black/black | 85 | | |
| | PX3 | brown/brown | 85 | | |
| | QD8 | grey-beige/grey-beige | 85 | | |
| 1B | 944 522 045 00 | backrest<br>leatherette/<br>backrest surface<br>porsche lettering cloth | 84- | 1 | |
| | LR1 | black/black | 84 | | |
| | LR2 | brown/brown | 84 | | |
| | LR3 | grey-beige/grey-beige | 84 | | |
| | PX2 | black/black | 85 | | |
| | PX4 | brown/brown | 85 | | |
| | QD9 | grey-beige/grey-beige | 85 | | |
| 1C | 944 522 045 00 | backrest<br>leatherette | 84- | 1 | |
| | JN3 | black | | | |
| | JN4 | brown | | | |
| | JN5 | grey-beige | | | |

| Pos | Part Number | Name | Remarks | Qty | Model |
|---|---|---|---|---|---|
| 2 | 477 885 871 B | seat cushion<br>leatherette/<br>centre part in cloth<br>FISCHGRAET | | 1 | |
| | DC2 | beige/<br>brown-beige | -80 | | |
| | DC5 | brown/<br>brown-beige | -80 | | |
| | DC8 | black/<br>orange | -80 | | |
| 2 | 477 885 871 B | seat cushion<br>leatherette/<br>centre part in cloth<br>pin stripe velour | | 1 | |
| | FD5 | black/<br>black-white<br>F >>92DN4 02148<br>F >>93DN1 00189 | | | |
| | FD6 | brown/<br>brown-beige<br>F >>92DN4 02148<br>F >>93DN1 00189 | | | |
| | FD7 | beige/<br>brown-beige | -82 | | |
| | GM4 | black/<br>black-white<br>piping<br>white<br>special model<br>"LE MANS" | 81 | | |
| | KU8 | black/<br>black-red<br>piping<br>black<br>special model | 82 | | 924 (CH) |
| | JR7 | grey-beige/<br>grey-beige-white<br>F >>92DN4 02148<br>F >>93DN1 00189 | | | |
| | JN1 | black/<br>black-white<br>F 92DN4 02149>><br>F 93DN1 00190>> | | | 924<br>TURBO |

| Pos | Part Number | Name | Remarks | Qty | Model |
|---|---|---|---|---|---|
| | JN2 | brown/<br>brown-beige<br>F 92DN4 02149>><br>F 93DN1 00190>> | | | <br><br>924<br>TURBO |
| | LD4 | grey-beige/<br>grey-beige-white<br>F 92DN4 02149>><br>F 93DN1 00190>> | | | <br><br>924<br>TURBO |
| 2 | 477 885 871 B | seat cushion<br>leatherette/<br>centre part in cloth<br>tartan cloth | | 1 | |
| | EN3 | black/<br>red-blue | | | |
| | EP1 | black/<br>green-blue | | | |
| | EP2 | brown/<br>brown-beige | | | |
| | EP3 | beige/<br>brown-beige | | | |
| 2 | 477 885 871 B | seat cushion<br>leatherette/<br>centre part in cloth<br>checker board velour | | 1 | |
| | FD8 | black/<br>grey/black | | | |
| | FD9 | brown/<br>beige/brown | | | |
| | FE1 | beige/<br>beige/brown | -82 | | |
| | JR4 | black/<br>light grey-black<br>F >>92DN4 02148<br>F >>93DN1 00189 | | | |
| | JR5 | brown/<br>brown-grey<br>F >>92DN4 02148<br>F >>93DN1 00189 | | | |
| | JR6 | grey-beige/<br>brown-grey<br>F >>92DN4 02148<br>F >>93DN1 00189 | | | |
| | LD5 | black/<br>light grey-black<br>F 92DN4 02149>><br>F 93DN1 00190>> | | | <br><br>924<br>TURBO |
| | LD6 | brown/<br>brown-grey<br>F 92DN4 02149>><br>F 93DN1 00190>> | | | <br><br>924<br>TURBO |
| | LD7 | grey-beige/<br>brown-grey<br>F 92DN4 02149>><br>F 93DN1 00190>> | | | <br><br>924<br>TURBO |
| 2 | 477 885 871 B | seat cushion<br>leatherette/<br>centre part in cloth<br>stripe design | | 1 | |
| | HS9 | black/<br>silver-black<br>special model | 82 | | |
| 2 | 477 885 871 B | seat cushion<br>leatherette/<br>centre part<br>porsche lettering cloth | | 1 | |
| | LR6 | black/black | 84 | | |
| | LR7 | brown/brown | 84 | | |
| | LR8 | grey-beige/grey-beige | 84 | | |
| | NC3 | black/<br>anthracite-burgundy<br>special model | 84 | | TURBO (I) |
| | PX1 | black/black | 85 | | |
| | PX3 | brown/brown | 85 | | |
| | QD8 | grey-beige/grey-beige | 85 | | |

| Pos | Part Number | Name | Remarks | Qty | Model |
|---|---|---|---|---|---|
| 2A | 477 885 871 B | seat cushion<br>leatherette/<br>centre part<br>and<br>cushion<br>pin stripe velour | | 1 | |
| | GF4 | black/<br>black-red | 81 | | GT |
| 2B | 477 885 871 B | seat cushion<br>leatherette/<br>seat surface<br>berber cloth | | 1 | |
| | GE9 | black/<br>grey/black | | | |
| | FE3 | brown/<br>beige/brown | | | |
| | FE4 | beige/<br>beige/brown | -82 | | |
| | JR8 | grey-beige/<br>grey-beige-grey | | | |
| 2B | 477 885 871 B | seat cushion<br>leatherette/<br>seat surface<br>porsche lettering cloth | | 1 | |
| | LR1 | black/black | 84 | | |
| | LR2 | brown/brown | 84 | | |
| | LR3 | grey-beige/grey-beige | 84 | | |
| | PX2 | black/black | 85 | | |
| | PX4 | brown/brown | 85 | | |
| | QD9 | grey-beige/grey-beige | 85 | | |
| 2B | 477 885 871 B | seat cushion | | 1 | |
| 2C | 477 885 871 B | seat cushion<br>leatherette | | 1 | |
| | DD2 | beige | -82 | | |
| | DD4 | brown<br>F >>92DN4 02148<br>F >>93DN1 00189 | | | |
| | DD6 | black<br>F >>92DN4 02148<br>F >>93DN1 00189 | | | |
| | 4FK | grey-beige<br>F >>92DN4 02148<br>F >>93DN1 00189 | | | |
| | JN3 | black<br>F 92DN4 02149>><br>F 93DN1 00190>> | | | 924<br>TURBO |
| | JN4 | brown<br>F 92DN4 02149>><br>F 93DN1 00190>> | | | 924<br>TURBO |
| | JN5 | grey-beige<br>F 92DN4 02149>><br>F 93DN1 00190>> | | | 924<br>TURBO |

- -- E N D -- -

| Model | Year | MG | SG | Illustration | Restrictions | Update | 10:14 | 16.08.2004 | PORSCHE PET PORSCHE |
|---|---|---|---|---|---|---|---|---|---|
| 924 | 85 | 8 | 08 | 808-25 | | 179 | | | |

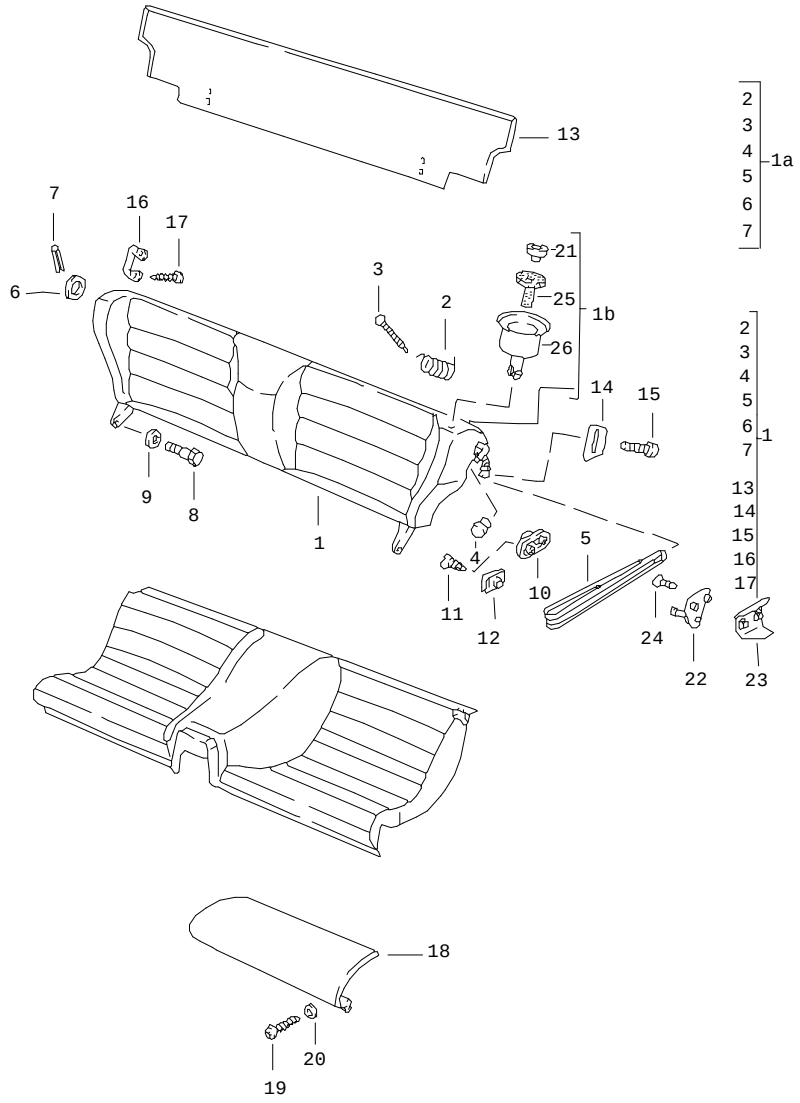


| Pos | Part Number | Name | Remarks | Qty | Model |
|---|---|---|---|---|---|
| | | back seat<br>single parts | | | |
| 1-1B | - | see group<br>8/08/20 | | 1 | |
| 2 | 111 885 657 | spring<br>for<br>locking hook | -83 | 1 | |
| 3 | 113 881 899 | special tack | -83 | 1 | |
| 4 | 477 885 699 B | plug<br>for<br>locking hook | /L -83 | 1 | |
| (4) | 477 885 699 C | plug<br>for<br>locking hook | /R -83 | 1 | |
| 5 | 477 885 667 | loop | /L -83 | 1 | |
| | 05T | black | | | |
| | 21S | brown<br>F >>92DN4 02148<br>F >>93DN1 00189 | | | 924<br>TURBO |
| | 4FK | grey-beige | 83- | | |
| | 4RB | brown<br>F 92DN4 02149>><br>F 93DN1 00190>> | | | 924<br>TURBO |
| 6 | E 477 885 555 | cover | -83 | 1 | |
| 7 | 900 197 010 00 | roll pin<br>3 X 22 | -83 | 1 | |
| 8 | 477 885 767 | hexagon-head bolt | | 2 | |
| 9 | 900 025 007 02 | washer<br>A 8,4 | | 2 | |
| 10 | 111 867 329 A | locking lug | /L -83 | 1 | |
| (10) | E 111 867 330 A | locking lug | /R -83 | 1 | |
| 11 | E N 014 002 1 | counters. head tapp. screw<br>B 6,3 X 22 | -83 | 4 | |
| 12 | 999 591 327 02 | speed nut<br>B 6,3 | | 4 | |

| Pos | Part Number | Name | Remarks | Qty | Model |
|---|---|---|---|---|---|
| 13 | 477 885 831 A | cover<br>carpet | -83 | 1 | |
| | 43S | black<br>F >>92CN4 06384<br>F >>93CN1 00861<br>F >>93BN7 00450 | | | 924<br>TURBO<br>GT |
| | 3BF | black<br>F 92CN4 06385>><br>F 93CN1 00862>> | | | 924<br>TURBO |
| | 83S | beige<br>F >>92CN4 07430<br>F >>93CN1 00932 | | | 924<br>TURBO |
| | 1NF | beige<br>F 92CN4 07431>><br>F 93CN1 00933>> | -82 | | 924<br>TURBO |
| | 87S | brown<br>F >>92CN4 07430<br>F >>93CN1 00932 | | | 924<br>TURBO |
| | 8NF | brown<br>F 92CN4 07431>><br>F 93CN1 00933>> | | | 924<br>TURBO |
| | 8BR | grey | 82 | | |
| | 4BF | grey | 83- | | |
| | 3FF | grey-beige | 83- | | |
| 13 | 944 522 831 00 | carpet<br>for<br>back seat backrest | 84- | 1 | |
| | 3BF | black | | | |
| | 4BF | grey | | | |
| | 8NF | brown | | | |
| | 3FF | grey-beige | | | |
| 14 | 477 885 865 | stop | /L -83 | 1 | |
| (14) | 477 885 866 | stop | /R -83 | 1 | |
| 15 | N 014 155 1 | oval-head screw<br>AM 5 X 22 | -83 | 4 | |
| 16 | 477 885 761 | holder | | 2 | |
| 17 | N 014 096 3 | tapping screw<br>B 4,2 X 22 | | 4 | |
| 18 | 477 885 041 B | back seat extension<br>leatherette | /L | 1 | (J) |
| | 43S | black | | | |
| | 83S | beige | | | |
| | 87S | brown | | | |
| (18) | 477 885 042 B | back seat extension<br>leatherette | /R | 1 | (J) |
| | 43S | black | | | |
| | 83S | beige | | | |
| | 87S | brown | | | |
| 19 | N 043 940 3 | tapping screw<br>4,2 X 25 | | 6 | (J) |
| 20 | 900 151 028 02 | washer<br>4,3 | | 6 | (J) |
| 21 | 944 522 317 00 | push button | 84- | 2 | |
| | 01C | satin black | | | |
| 22 | 944 522 029 00 | locking lug | /L 84- | 1 | |
| (22) | 944 522 030 00 | locking lug | /R 84- | 1 | |
| 23 | 944 522 031 00 | support<br>for<br>locking lug | 84- | 2 | |
| 24 | 999 219 012 07 | countersunk-head screw<br>M 6 X 22<br>self-locking | 84- | 4 | |
| 25 | 944 522 319 00 | guide piece | | 2 | |
| 26 | 944 522 315 00 | rose | | 2 | |
| | 01C | satin black | | | |

- -- E N D -- -

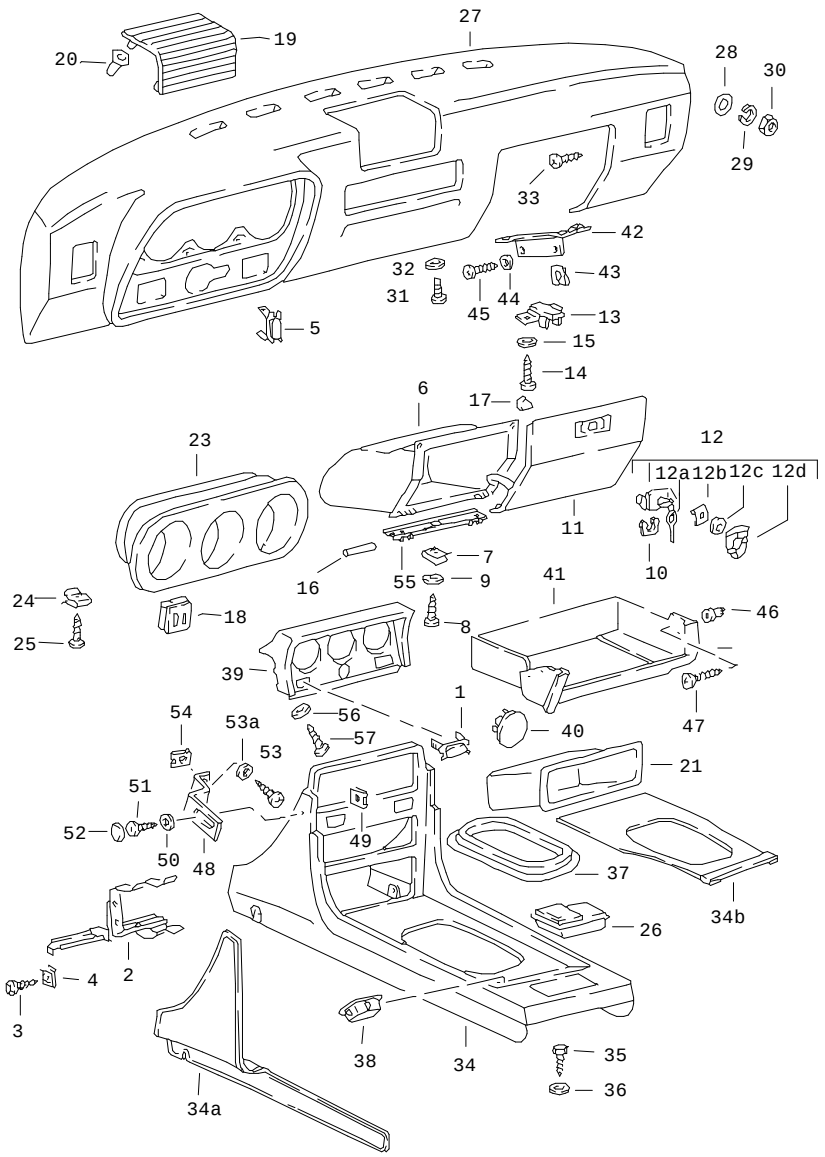


| Pos | Part Number | Name | Remarks | Qty | Model |
|---|---|---|---|---|---|
| | | dashboard<br>centre console | | | |
| 1 | 133 957 087 | cover | | 1 | |
| 2 | 477 857 067 A | support<br>centre console | | 1 | |
| 3 | N 013 957 5 | tapping screw<br>BZ 3,5 X 9,5 | | 2 | |
| 4 | N 015 422 2 | speed nut<br>B 4,2 X 17 | | 2 | |
| 5 | 133 957 087 | cover | | 1 | (I) |
| 6 | 477 857 095 B | glove compartment<br>F >>92DN4 05030<br>F >>93DN1 00304 | | 1 | <br>924<br>TURBO |
| (6) | 477 857 095 C | glove compartment<br>F 92DN4 05031>><br>F 93DN1 00305>> | | 1 | <br>924<br>TURBO |
| 7 | N 015 422 2 | speed nut<br>B 4,2 X 17 | | 2 | |
| 8 | N 013 964 4 | tapping screw<br>B 4,2 X 16 | | 5 | |
| 9 | N 011 692 3 | washer | | 5 | |
| 10 | 133 857 119 | clamp | | 1 | |
| | 01C | black | | | |
| 11 | 477 857 123 | glove box cover | /LL | 1 | |
| | 05T | black | -82 | | |
| | 21S | brown | | | |
| | 1DB | black | 83- | | |
| (11) | 478 857 123 | glove box cover | /RL | 1 | |
| | 05T | black | -82 | | |
| | 21S | brown | | | |
| | 1DB | black | 83- | | |
| 11 | 477 857 123 A | glove box cover | /LL | 1 | |

| Pos | Part Number | Name | Remarks | Qty | Model |
|---|---|---|---|---|---|
| | 4RB | brown | 83- | | |
| (11) | 478 857 123 A | glove box cover | /RL | 1 | |
| | 4RB | brown | 83- | | |
| 12 | 477 857 133 C | lock<br>with keys | | 1 | |
| | 01C | black | | | |
| | 90V | brown | | | |
| 12A | 477 857 135 A | blank key | | 2 | |
| 12A | A 477 857 136 A | key<br>with stipulated lock-no.<br>state lock number<br>F >>92BN4 03619<br>F >>93BN1 00653<br>F >>93BN7 00380 | | 1 | |
| 12A | 477 857 136 A | key<br>with stipulated lock-no.<br>state lock number | | 1 | |
| 12B | N 012 852 1 | clamping washer | 82- | 1 | |
| 12C | N 011 536 1 | washer<br>A 2,2 | 82- | 1 | |
| 12D | 944 559 097 00 | emblem | 82- | 1 | |
| 13 | 477 857 143 | lock piece | | 1 | |
| | 01C | black | | | |
| 14 | E 900 143 070 02 | oval-head sheetmetal screw<br>B 4,2 X 13 | | 2 | |
| 15 | 900 025 002 02 | washer<br>A 4,3 | | 2 | |
| 16 | N 013 209 2 | straight pin<br>4 H 8 X 36 | | 2 | |
| 17 | N 020 022 3 | plug<br>A 8 X 1 | | 1 | |
| 18 | 477 857 137 | cover<br>light switch | /L -82 | 1 | |
| | 01C | black | -82 | | |
| | 89S | cadbury brown | -82 | | |
| 18 | 477 857 137 A | cover<br>light switch | /L | 1 | |
| | 1DB | black | | | |
| | 4RB | brown | 83- | | |
| (18) | 477 857 138 | cover<br>switch<br>rear window heating | /R | 1 | |
| | 01C | black | -82 | | |
| | 89S | cadbury brown | -82 | | |
| (18) | 477 857 138 A | cover<br>switch<br>rear window heating | /R | 1 | |
| | 1DB | black | | | |
| | 4RB | brown | 83- | | |
| 19 | 477 857 183 | loudspeaker grille | | 1 | |
| | 8RK | brown | | | |
| 19 | 477 857 187 | loudspeaker grille | | 1 | |
| | 01C | black | | | |
| | 1DB | black | | | |
| | 89S | brown | | | |
| 20 | 477 857 821 | grommet<br>loudspeaker grille | | 4 | |
| 21 | 481 857 233 A | package box | | 1 | |
| 23 | 477 857 283 A | covering for instruments | | 1 | |
| | 01C | black | | | |
| | 89S | cadbury brown<br>F >>92CN4 02197<br>F >>93CN1 00305<br>F >>93BN7 00450 | 82- | | 924<br>TURBO<br>GT |
| | FP7 | black | | | |

| Pos | Part Number | Name | Remarks | Qty | Model |
|---|---|---|---|---|---|
| | FP8 | brown<br>F 92CN4 02198>><br>F 93CN1 00306>> | | | 924<br>TURBO |
| 24 | 999 591 722 02 | speed nut<br>B 4,8 X 19,8 | | 2 | |
| 25 | 900 143 046 02 | tapping screw<br>B 4,8 X 16 | | 2 | |
| 26 | 944 552 305 00 | ashtray | | 1 | |
| | 1DB | black | | | |
| | 4RB | brown | | | |
| 27 | 477 857 881 A | dashboard | /LL | 1 | |
| | 05T | black | -82 | | |
| | 21S | brown | | | |
| | 1DB | black | 83- | | |
| (27) | 478 857 881 A | dashboard | /RL | 1 | |
| | 05T | black | -82 | | |
| | 21S | brown | -82 | | |
| | 1DB | black | 83- | | |
| 27 | 477 857 881 C | dashboard | /LL | 1 | |
| | 4RB | brown | 83- | | |
| (27) | 478 857 881 C | dashboard | /RL | 1 | |
| | 4RB | brown | 83- | | |
| 28 | N 011 612 3 | washer<br>R 7 | | 2 | |
| 29 | N 012 036 1 | lock ring<br>6 | | 2 | |
| 30 | 900 076 010 02 | hexagon nut<br>M 6 | | 2 | |
| 31 | N 014 140 5 | oval-head screw<br>AM 6 X 15 | | 1 | |
| 32 | N 011 524 7 | washer<br>A 6,4 | | 1 | |
| 33 | 900 143 007 02 | tapping screw<br>B 4,2 X 19 | | 4 | |
| (34) | 477 857 909 | centre console<br>F >>92CN4 02197<br>F >>93CN1 00305 | | 1 | 924<br>TURBO |
| | 01C | black | | | |
| | 89S | cadbury brown | | | |
| 34 | 477 857 931 | centre console<br>F 92CN4 02198>><br>F 93CN1 00306>> | | 1 | 924<br>TURBO |
| | 01C | black | | | |
| | 89S | cadbury brown | | | |
| 34 | 477 857 931 A | centre console | 83- | 1 | |
| | 1DB | black | | | |
| | 4RB | brown | | | |
| 34A | 477 863 741 | lining | /L | 1 | |
| | 43S | black<br>F >>92CN4 06384<br>F >>93CN1 00861<br>F >>93BN7 00450 | | | 924<br>TURBO<br>GT |
| | 3BF | black<br>F 92CN4 06385>><br>F 93CN1 00862>> | | | 924<br>TURBO |
| | 87S | cadbury brown<br>F >>92CN4 07430<br>F >>93CN1 00932 | | | 924<br>TURBO |
| | 8NF | brown<br>F 92CN4 07431>><br>F 93CN1 00933>> | | | 924<br>TURBO |
| | 83S | beige<br>F >>92CN4 07430<br>F >>93CN1 00932 | | | 924<br>TURBO |
| | 1NF | beige<br>F 92CN4 07431>><br>F 93CN1 00933>> | -82 | | 924<br>TURBO |
| | 4BF | grey | | | |

| Pos | Part Number | Name | Remarks | Qty | Model |
|---|---|---|---|---|---|
| | 3FF | grey-beige | 83- | | |
| | 8BR | grey | 82 | | 924 |
| (34A) | 477 863 742 | lining | /R | 1 | |
| | 43S | black | | | |
| | | F >>92CN4 06384 | | | 924 |
| | | F >>93CN1 00861 | | | TURBO |
| | | F >>93BN7 00450 | | | GT |
| | 3BF | black | | | |
| | | F 92CN4 06385>> | | | 924 |
| | | F 93CN1 00862>> | | | TURBO |
| | 87S | cadbury brown | | | |
| | | F >>92CN4 07430 | | | 924 |
| | | F >>93CN1 00932 | | | TURBO |
| | 8NF | brown | | | |
| | | F 92CN4 07431>> | | | 924 |
| | | F 93CN1 00933>> | | | TURBO |
| | 83S | beige | | | |
| | | F >>92CN4 07430 | | | 924 |
| | | F >>93CN1 00932 | | | TURBO |
| | 1NF | beige | -82 | | |
| | | F 92CN4 07431>> | | | 924 |
| | | F 93CN1 00933>> | | | TURBO |
| | 4BF | grey | | | |
| | 3FF | grey-beige | 83- | | |
| | 8BR | grey | 82 | | 924 |
| 34B | 477 863 749 | carpet | | 1 | |
| | 43S | black | | | |
| | | F >>92CN4 06384 | | | 924 |
| | | F >>93CN1 00861 | | | TURBO |
| | | F >>93BN7 00450 | | | GT |
| | 3BF | black | | | |
| | 1DR | black | | | |
| | | F 92CN4 06385>> | | | 924 |
| | | F 93CN1 00862>> | | | TURBO |
| | 87S | cadbury brown | | | |
| | | F >>92CN4 07430 | | | 924 |
| | | F >>93CN1 00932 | | | TURBO |

| Pos | Part Number | Name | Remarks | Qty | Model |
|---|---|---|---|---|---|
| | 8NF | brown | | | |
| | | F 92CN4 07431>> | | | 924 |
| | | F 93CN1 00933>> | | | TURBO |
| | 83S | beige | | | |
| | | F >>92CN4 07430 | | | 924 |
| | | F >>93CN1 00932 | | | TURBO |
| | 1NF | beige | -82 | | |
| | | F 92CN4 07431>> | | | 924 |
| | | F 93CN1 00933>> | | | TURBO |
| | 4BF | grey | | | |
| | 3FF | grey-beige | 83- | | |
| | 8BR | grey | 82 | | |
| 35 | N 013 891 1 | tapping screw<br>M 8 X 15 | | 2 | |
| 36 | N 011 533 2 | washer<br>B 8,4 | | 2 | |
| 37 | 477 857 975 | support frame<br>gearshift lever | | 1 | |
| | 01C | black | | | |
| | 89S | cadbury brown | | | |
| 38 | 911 552 469 00 | cover | | X | |
| 39 | 477 857 977 | instrument insert | | 1 | |
| | 01C | black | | | |
| | 89S | cadbury brown | | | |
| | | F >>92CN4 02197 | | | 924 |
| | | F >>93CN1 00305 | | | TURBO |
| 39 | 477 857 977 B | instrument insert | | 1 | |
| | 01C | black | -82 | | |
| | 89S | cadbury brown | -82 | | |
| | | F 92CN4 02198>> | | | 924 |
| | | F 93CN1 00306>> | | | TURBO |
| | 1DB | black | 83- | | |
| | 4RB | brown | 83- | | |
| 40 | 841 863 267 | cover | | X | |

| Pos | Part Number | Name | Remarks | Qty | Model |
|---|---|---|---|---|---|
| | 041 | black | | | |
| 41 | 477 857 836 | shelf | /LL | 1 | |
| | 01C | black | | | |
| | 89S | brown | | | |
| 42 | 477 857 195 A | support | /LL | 1 | |
| 43 | N 015 422 2 | speed nut<br>B 4,2 X 17 | /LL | 2 | |
| 44 | 900 025 002 02 | washer<br>A 4,3 | /LL | 2 | |
| 45 | N 013 964 4 | tapping screw<br>B 4,2 X 16 | /LL | 2 | |
| 46 | 477 857 173 | clip | /LL | 1 | |
| 47 | N 013 971 3 | tapping screw<br>B 4,8 X 22 | /LL | 1 | |
| | | POS. 48 - 54<br>F 92CN4 02198>><br>F 93CN1 00306>> | | | 924<br>TURBO |
| 48 | 477 857 941 | bracket | | 2 | |
| 49 | N 015 422 2 | speed nut | | 2 | |
| 50 | 900 151 028 02 | washer<br>B 4,3 | | 2 | |
| 51 | 311 867 167 | tapping screw | | 2 | |
| 52 | 311 867 169 | cap | | 2 | |
| | 01C | black | | | |
| | 90V | brown | | | |
| 53 | 900 143 007 02 | tapping screw<br>B 4,2 X 13 | | 2 | |
| 53A | E 900 904 013 02 | washer<br>A 4,55 | | 2 | |
| 54 | 999 591 850 02 | speed nut | | 2 | |
| 55 | 944 552 195 00 | hinge<br>F 92DN4 05031>><br>F 93DN1 00305>> | | 1 | 924<br>TURBO |
| - | E N 013 981 3 | tapping screw<br>B 3,9 X 13<br>F 92DN4 05031>><br>F 93DN1 00305>> | | 1 | 924<br>TURBO |
| 56 | N 011 535 5 | washer<br>A 3,2 | | 2 | |
| 57 | N 013 953 9 | tapping screw<br>B 2,9 X 9,5 | | 2 | |
| | | - -- E N D -- - | | | |

| Model | Year | MG | SG | Illustration | Restrictions | Update | 10:14 | 16.08.2004 | PORSCHE | PET | PORSCHE |
|---|---|---|---|---|---|---|---|---|---|---|---|
| 924 | 85 | 8 | 09 | 809-01 | | 179 | | | | | |

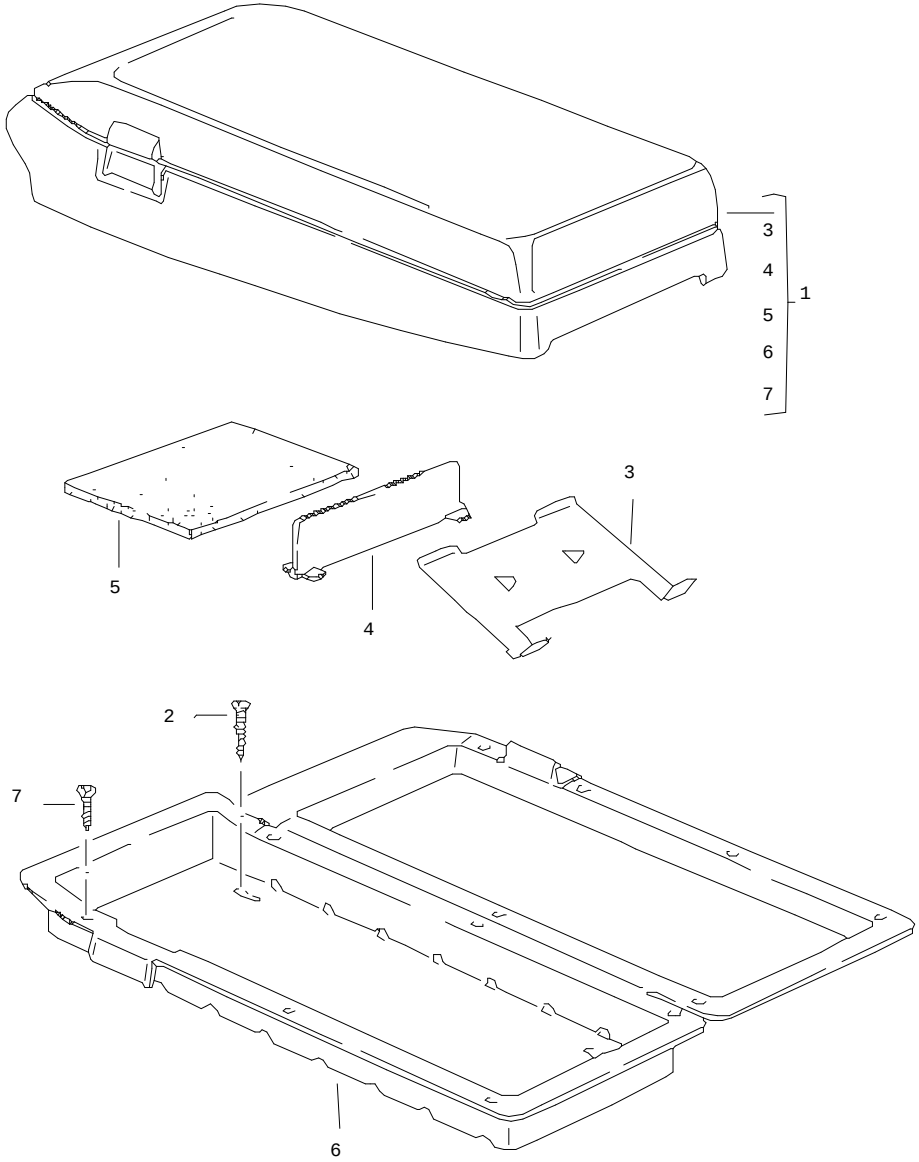


| Pos | Part Number | Name | Remarks | Qty | Model |
|---|---|---|---|---|---|
| | | cassette box | | | |
| 1 | 477 857 059 | cassette box | /LL | 1 | |
| | 05T | black | | | |
| | 4RB | brown | | | |
| (1) | 478 857 059 | cassette box | /RL | 1 | |
| | 05T | black | | | |
| | 4RB | brown | | | |
| 2 | 999 450 001 07 | round head screw<br>B4,2 X 25 | | 4 | |
| 3 | 928 555 731 02 | cassette support | | 6 | |
| | 01C | satin black | | | |
| 4 | 928 555 741 02 | partition panel | | 1 | |
| 5 | 928 555 735 03 | cover | | 1 | |
| 6 | 928 555 729 03 | insert | /LL | 1 | |
| | 01C | satin black | | | |
| (6) | 927 555 729 03 | insert | /RL | 1 | |
| | 01C | satin black | | | |
| 7 | 900 143 065 07 | tapping screw<br>B2,9 X 9,5 | | 14 | |
| | | - -- E N D -- - | | | |

| Model | Year | MG | SG | Illustration | Restrictions | Update | | | | |
|---|---|---|---|---|---|---|---|---|---|---|
| 924 | 85 | 8 | 09 | 809-05 | | 179 | 10:14 | 16.08.2004 | PORSCHE | PET | PORSCHE |

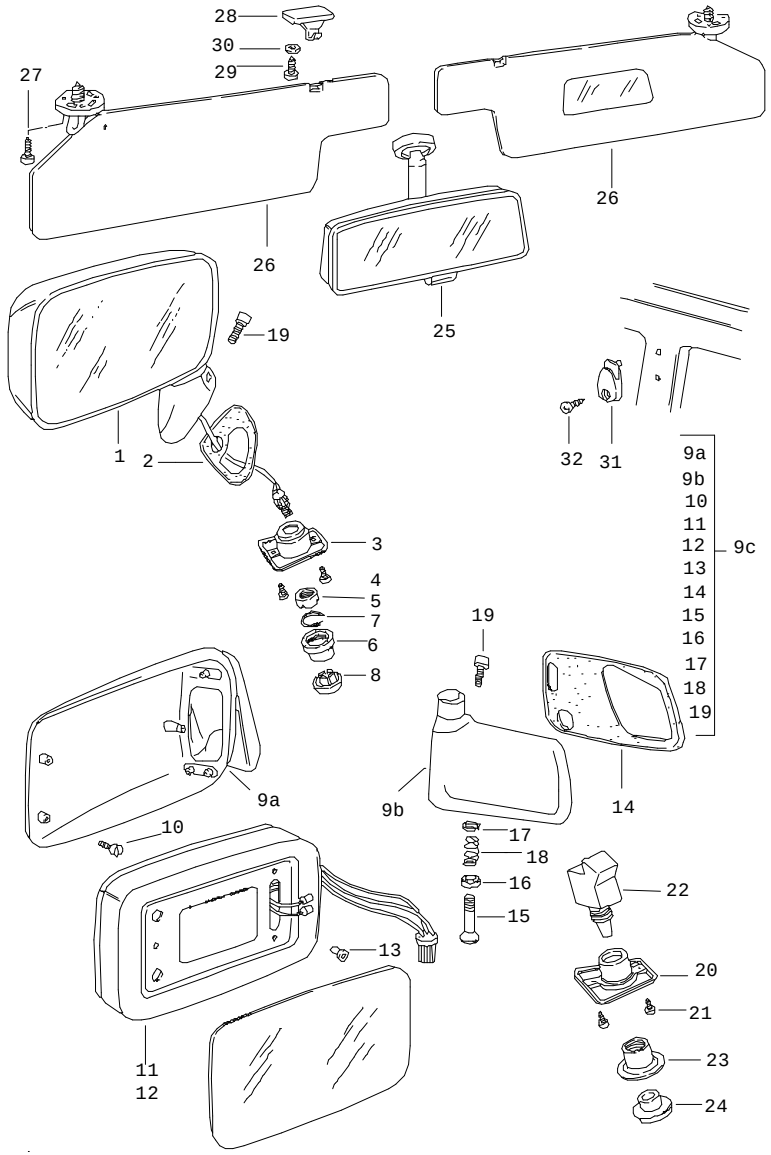


| Pos | Part Number | Name | Remarks | Qty | Model |
|---|---|---|---|---|---|
| | | door mirror<br>interior mirror<br>sun visor | | | |
| 1 | 477 857 521 E | door mirror<br>plan | /LL/L | 1 | |
| (1) | 478 857 522 F | door mirror<br>plan | /RL/R | 1 | |
| (1) | 477 857 522 B | door mirror<br>convex | /LL/R | 1 | |
| (1) | 477 857 522 C | door mirror<br>plan | /LL/R | 1 | |
| - | 477 857 611 B | mirror glass<br>plan | | 1 | |
| - | 477 857 611 C | mirror glass<br>convex | | 1 | (S) |
| 2 | 477 857 579 | desk pad | /L | 1 | |
| (2) | 478 857 579 | desk pad | /R | 1 | |
| 3 | 477 867 523 | mounting piece | | 1 | |
| | 01C | black | | | |
| 4 | N 014 090 5 | tapping screw<br>3,9 X 13 | | 2 | |
| 5 | 477 857 615 | threaded bush | | 1 | |
| | 01C | black | | | |
| 6 | 477 857 619 | bellows | | 1 | |
| 7 | 477 857 641 | retainer | | 1 | |
| 8 | 477 857 617 | knob | | 1 | |
| | 01C | black | | | |
| | | door mirror<br>electrically adjustable<br>and<br>heated | | | |
| 9A | 911 731 043 03 | mirror housing | /L | 1 | |
| (9A) | 911 731 044 03 | mirror housing | /R | 1 | |

| Pos | Part Number | Name | Remarks | Qty | Model |
|---|---|---|---|---|---|
| 9B | 928 731 141 06 | mirror base | /LL/L | 1 | |
| (9B) | 928 731 143 08 | mirror base | /LL/R | 1 | |
| (9B) | 927 731 141 06 | mirror base | /RL/R | 1 | |
| (9B) | 927 731 143 08 | mirror base | /RL/L | 1 | |
| 9C | 477 898 027 | door mirror<br>plan | /LL/L | 1 | |
| (9C) | 477 898 028 | door mirror<br>plan | /LL/R | 1 | |
| (9C) | 477 898 029 | door mirror<br>convex | /LL/L | 1 | |
| (9C) | 477 898 030 | door mirror<br>convex | /LL/R | 1 | (S),(N) |
| (9C) | 478 898 027 | door mirror<br>plan | /RL/L | 1 | |
| (9C) | 478 898 028 | door mirror<br>plan | /RL/R | 1 | |
| (9C) | 478 898 029 | door mirror<br>convex | /RL/L | 1 | |
| 10 | 999 143 003 02 | hexagon-head bolt<br>M 5 X 10 | | 3 | |
| 11 | 911 731 027 06 | frame | /L -84 | 1 | |
| (11) | 911 731 028 06 | frame | /R -84 | 1 | |
| 11 | 944 731 027 01 | frame | 85- | 2 | |
| 12 | 911 731 035 08 | mirror glass<br>plan | | 1 | |
| (12) | A 911 731 035 09 | mirror glass<br>convex | -84 | 1 | |
| 12 | 911 731 035 09 | mirror glass<br>convex | | 1 | |
| 13 | 999 703 128 40 | grommet<br>mirror glass | | 3 | |
| 14 | 944 731 505 00 | desk pad | /LL/L | 1 | |
| (14) | 944 731 508 00 | desk pad | /LL/R | 1 | |
| (14) | 945 731 506 00 | desk pad | /RL/R | 1 | |
| (14) | 945 731 507 00 | desk pad | /RL/L | 1 | |
| 15 | 911 731 257 02 | guide tube | | 1 | |
| 16 | 911 731 345 02 | adjusting washer<br>lower | | 1 | |
| 17 | 911 731 347 00 | adjusting washer<br>upper | | 1 | |
| 18 | 911 731 029 01 | compression spring | | 1 | |
| 19 | 999 067 026 07 | pan-head screw<br>M 5 X 40 X 25 | | 1 | |
| 20 | E 477 867 181 | mounting piece | | 1 | |
| 21 | N 014 090 5 | tapping screw<br>3,9 X 13 | | 2 | |
| 22 | 911 613 115 00 | switch | | 1 | |
| 23 | 928 555 463 02 | threaded bush | | 1 | |
| 24 | 928 613 462 00 | knob | | 1 | |
| | | electric equipment<br>for<br>door mirror | | 1 | |
| - | 477 971 111 | harness<br>door mirror<br>driver's door | | 1 | |
| - | 477 971 115 A | harness<br>door mirror<br>dashboard | /LL | 1 | |
| - | E 478 971 115 A | harness<br>door mirror | /RL | 1 | |
| - | 477 971 910 | bellows<br>see group<br>8/04/00 | | 1 | |
| | | electric equipment<br>for<br>door mirror | | 2 | |
| - | 477 971 115 | harness<br>door mirror<br>dashboard | /LL | 1 | |

| Pos | Part Number | Name | Remarks | Qty | Model |
|---|---|---|---|---|---|
| - | 478 971 115 | harness<br>door mirror<br>dashboard | /RL | 1 | |
| - | 477 971 113 | harness<br>door mirror<br>passenger's door | | 1 | |
| - | 477 955 703 | rocker switch<br>passenger's side | /LL | 1 | |
| - | 478 955 703 | mirror changeover switch<br>passenger's side | /RL | 1 | |
| - | 803 971 979 | plug socket<br>7-pole | | X | |
| - | 477 971 910 | bellows<br>see group<br>8/04/00 | | 2 | |
| - | * 477 898 025 | installation set<br>electric<br>adjustable and heatable<br>plan | /LL/L | 1 | |
| - | 477 898 026 | installation set<br>electric<br>adjustable and heatable<br>plan | /LL/R | 1 | |
| 25 | 477 857 511 | interior mirror | | 1 | |
| 26 | 477 857 551 | sun visor<br>without mirror | /L -84 | 1 | |
| | 05T | black | | | |
| | 21S | brown<br>F >>92DN4 02148<br>F >>93DN1 00189 | | | 924<br>TURBO |
| | 4RB | brown<br>F 92DN4 02149>>><br>F 93DN1 00190>>> | | | 924<br>TURBO |
| (26) | 478 857 551 A | sun visor<br>with mirror | /L -84 | 1 | |
| | 05T | black | | | |
| | 21S | brown<br>F >>92DN4 02148<br>F >>93DN1 00189 | | | 924<br>TURBO |
| | 4RB | brown<br>F 92DN4 02149>>><br>F 93DN1 00190>>> | | | 924<br>TURBO |
| (26) | 477 857 551 D | sun visor<br>with mirror | /L -84 | 1 | (AUS) |
| | 05T | black | | | |
| | 21S | brown<br>F >>92DN4 02148<br>F >>93DN1 00189 | | | 924<br>TURBO |
| | 4RB | brown<br>F 92DN4 02149>>><br>F 93DN1 00190>>> | | | 924<br>TURBO |
| (26) | 477 857 552 C | sun visor<br>with mirror | /R -84 | 1 | |
| | 05T | black | | | |
| | 21S | brown<br>F >>92DN4 02148<br>F >>93DN1 00189 | | | 924<br>TURBO |
| | 4RB | brown<br>F 92DN4 02149>>><br>F 93DN1 00190>>> | | | 924<br>TURBO |
| (26) | 477 857 552 A | sun visor<br>without mirror | /R -84 | 1 | |
| | 05T | black | | | |
| | 21S | brown<br>F >>92DN4 02148<br>F >>93DN1 00189 | | | 924<br>TURBO |
| | 4RB | brown<br>F 92DN4 02149>>><br>F 93DN1 00190>>> | | | 924<br>TURBO |
| (26) | 477 857 552 B | sun visor<br>without mirror | /R -84 | 1 | (AUS) |
| | 05T | black | | | |
| | 21S | brown<br>F >>92DN4 02148<br>F >>93DN1 00189 | | | 924<br>TURBO |

| Pos | Part Number | Name | Remarks | Qty | Model |
|---|---|---|---|---|---|
| | 4RB | brown<br>F 92DN4 02149>><br>F 93DN1 00190>> | | | 924<br>TURBO |
| (26) | 944 731 031 01 | sun visor | /L 85- | 1 | |
| | 05T | black | | | |
| | 4RB | brown | | | |
| (26) | 944 731 032 01 | sun visor | /R 85- | 1 | |
| | 05T | black | | | |
| | 4RB | brown | | | |
| 27 | N 014 096 3 | tapping screw<br>B 4,2 X 22 | | 6 | |
| 28 | 803 857 561 A | support<br>sun visor | -84 | 2 | |
| (28) | 944 731 439 00 | support<br>sun visor | 85- | 2 | |
| 29 | 900 143 047 07 | tapping screw<br>B 4,2 X 19 | | 4 | |
| 30 | 900 151 028 02 | washer<br>B 4,3 | | 4 | |
| 31 | 171 857 635 | coat hook | | 2 | |
| | 01C | black | | | |
| 32 | 171 857 650 | screw<br>4,8 X 16 | | 2 | |
| | | - -- E N D -- - | | | |

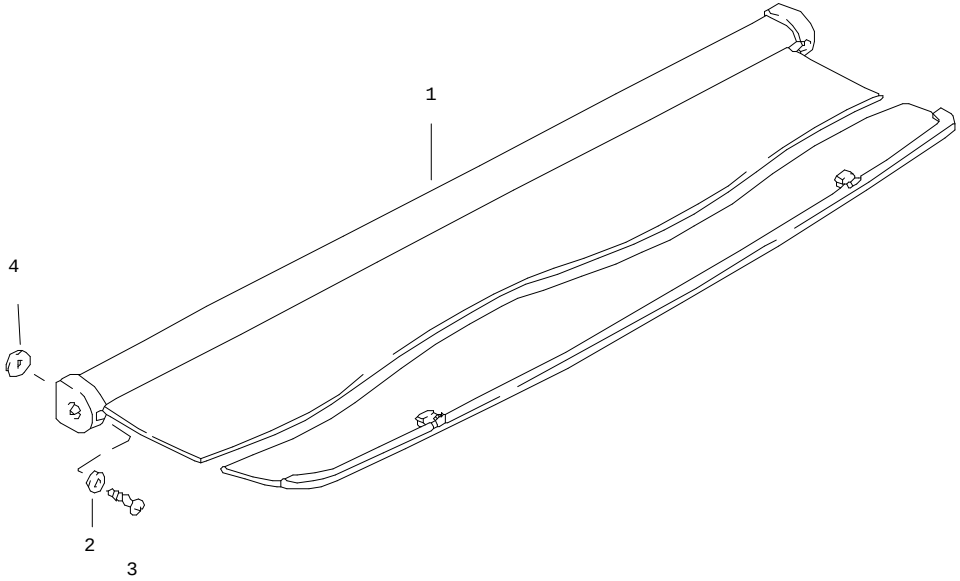


| Pos | Part Number | Name | Remarks | Qty | Model |
|---|---|---|---|---|---|
| | | luggage boot cover | | | |
| 1 | 477 863 511 A | luggage boot cover | | 1 | |
| | 05T | black | | | |
| | 89S | brown | | | |
| - | 477 863 517 A | housing cover<br>luggage boot cover<br>17,5 MM<br>breadth of rim | /L | 1 | |
| | 05T | black | | | |
| | 89S | brown | | | |
| - | 477 863 518 A | housing cover<br>luggage boot cover<br>17,5 MM<br>breadth of rim | /R | 1 | |
| | 05T | black | | | |
| | 89S | brown | | | |
| - | 477 863 517 B | housing cover<br>luggage boot cover<br>16 MM<br>breadth of rim | /L | 1 | |
| | 05T | black | | | |
| - | 477 863 518 B | housing cover<br>luggage boot cover<br>16 MM<br>breadth of rim | /R | 1 | |
| | 05T | black | | | |
| 2 | 900 025 003 02 | washer<br>A 5,3 | | 2 | |
| 3 | N 013 971 3 | tapping screw<br>4,8 X 22 | | 2 | |
| - | 477 863 539 | luggage net | | 1 | |
| 4 | 999 704 139 40 | spacer | 84- | 2 | |
| | | - -- E N D -- - | | | |

| Model | Year | MG | SG | Illustration | Restrictions | Update | | | | |
|---|---|---|---|---|---|---|---|---|---|---|
| 924 | 85 | 8 | 10 | 810-00 | | 179 | 10:14 | 16.08.2004 | PORSCHE | PET | PORSCHE |

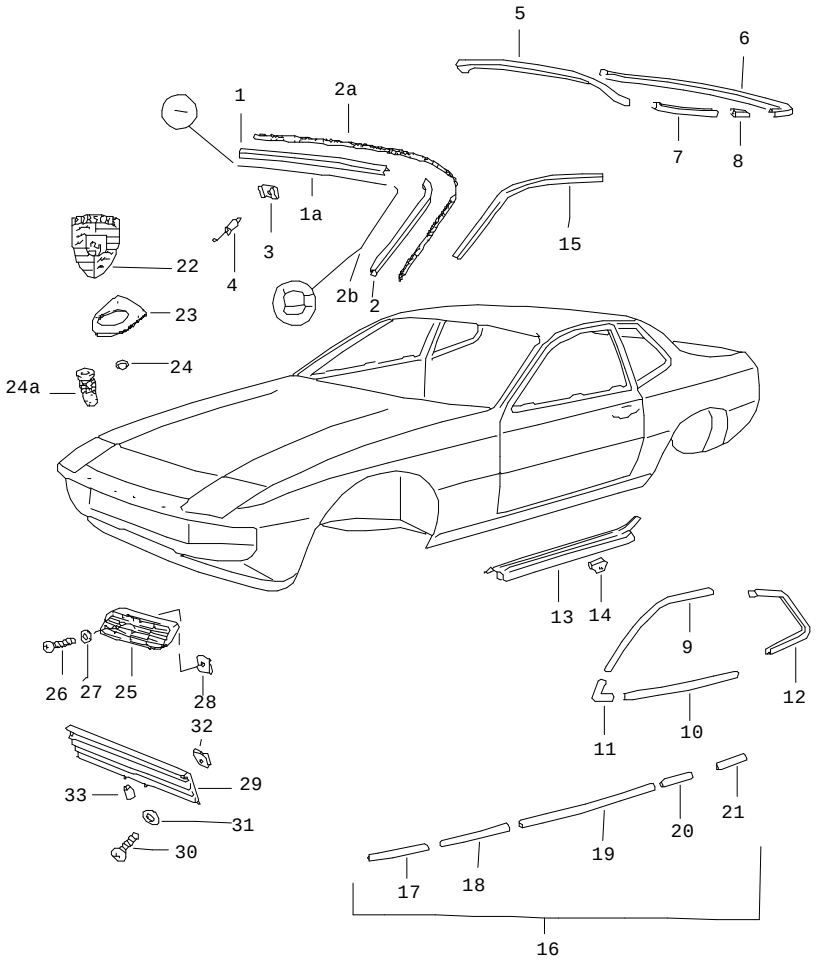


| Pos | Part Number | Name | Remarks | Qty | Model |
|---|---|---|---|---|---|
| | | decorative fittings | | | |
| 1 | 477 853 343 A | moulding<br>upper<br>F >>92CN4 02197<br>F >>93CN1 00305 | | 1 | 924/TURBO<br><br>924<br>TURBO |
| 1 | 944 559 043 00 | moulding<br>upper | | 1 | |
| 1 | 937 559 135 00 | moulding<br>upper | 81 | 1 | GT |
| 1A | 944 559 043 00 | moulding<br>F 92CN4 02198>><br>F 93CN1 00306>> | -82 | 1 | <br>924<br>TURBO |
| 2 | 477 853 019 | moulding | /L | 1 | |
| (2) | 477 853 020 | moulding<br>F >>92CN4 02197<br>F >>93CN1 00305 | /R | 1 | <br>924<br>TURBO |
| 2 | 944 559 045 00 | moulding | /L | 1 | |
| (2) | 944 559 046 00 | moulding<br>F 92CN4 02198>><br>F 93CN1 00306>> | /R | 1 | <br>924<br>TURBO |
| 2B | 944 559 027 00 | gasket | /L | 1 | |
| (2B) | 944 559 028 00 | gasket<br>F 92EN4 00295>> | /R | 1 | |
| 3 | 477 853 659 B | clamp | | 16 | |
| 4 | 431 805 121 A | bolt | | 16 | |
| 5 | 477 853 313 | trim frame<br>upper | /H | 1 | 924 |
| (5) | 477 853 313 A | trim frame<br>upper | /H | 1 | TURBO |
| (5) | 477 853 313 A | trim frame<br>upper | /H | 1 | 924:M 471 |
| 6 | 477 853 311 | trim frame<br>lower | /H | 1 | 924 |
| 7 | 477 853 315 | trim frame | /L | 1 | 924 |
| (7) | 477 853 316 | trim frame<br>rear window | /R | 1 | 924 |

| Pos | Part Number | Name | Remarks | Qty | Model |
|---|---|---|---|---|---|
| 8 | 477 853 367 | sleeve<br>trim frame | | 4 | 924 |
| 9 | 477 853 373 B | moulding | /L | 1 | |
| (9) | 477 853 374 B | moulding<br>door | /R | 1 | |
| 10 | 477 853 371 B | moulding | /L | 1 | |
| (10) | 477 853 372 B | moulding<br>door | /R | 1 | |
| 11 | 477 853 375 A | moulding | | 2 | |
| 12 | 477 853 365 A | trim frame | /L | 1 | |
| (12) | 477 853 366 A | trim frame | /R | 1 | |
| 13 | 477 853 657 A | scuff plate | /L | 1 | |
| (13) | 477 853 658 A | scuff plate | /R | 1 | |
| 14 | 477 853 655 | clamp | | 10 | |
| 15 | 477 853 705 | roof moulding | /L | 1 | |
| (15) | 477 853 706 | roof moulding | /R | 1 | |
| - | 944 559 159 02 | plastic foam strip<br>roof moulding | | 2 | |
| 16 | * 477 853 995 | set of moldings<br>moulding<br>with<br>adhesive tape | | 1 | |
| 17 | * 477 853 981 | moulding<br>285 MM | /V/L | 1 | |
| (17) | * 477 853 982 | moulding<br>285 MM | /V/R | 1 | |
| 18 | * 477 853 983 | moulding<br>395 MM | /V/L | 1 | |
| (18) | * 477 853 984 | moulding<br>395 MM | /V/R | 1 | |
| 19 | * 477 853 985 | moulding<br>1123 MM | /L | 1 | |
| (19) | * 477 853 986 | moulding<br>1123 MM | /R | 1 | |
| 20 | * 477 853 987 | moulding<br>285 MM | /H/L | 1 | |
| (20) | * 477 853 988 | moulding<br>285 MM | /H/R | 1 | |
| 21 | * 477 853 989 | moulding<br>440 MM | /H/L | 1 | |
| (21) | * 477 853 990 | moulding<br>440 MM | /H/R | 1 | |
| 22 | A 901 559 210 20 | lid emblem | | 1 | |
| 22 | 993 559 211 00 | lid emblem | | 1 | |
| 23 | 901 559 215 20 | desk pad | | 1 | |
| 24 | 999 591 423 03 | tapping nut<br>F >>92CN4 06040<br>F >>93CN1 00841 | | 2 | <br>924<br>TURBO |
| 24A | A 999 702 175 50 | grommet | | 2 | |
| 24A | 999 702 175 50 | grommet<br>F 92CN4 06041>><br>F 93CN1 00842>> | | 2 | <br>924<br>TURBO |
| 25 | E 477 853 381 | ventilation grille | | 4 | TURBO |
| 26 | N 013 953 9 | tapping screw | | 4 | TURBO |
| 27 | 900 025 001 02 | washer | | 4 | TURBO |
| 28 | N 015 428 1 | speed nut | | 4 | TURBO |
| (29) | 944 559 135 00 | radiator grille | | 1 | |
| 30 | 900 143 064 07 | tapping screw<br>B 3,5 X 25 | | 2 | |
| 31 | 900 151 028 02 | washer<br>4,3 | | 2 | |
| 32 | N 015 438 1 | speed nut<br>B 3,5 X 16,5 | | 2 | |
| 33 | 477 853 661 | grommet | | 2 | |
| | | - -- E N D -- - | | | |

| Model | Year | MG | SG | Illustration | Restrictions | Update | 10:14 | 16.08.2004 | PORSCHE | PET | PORSCHE |
|---|---|---|---|---|---|---|---|---|---|---|---|
| 924 | 85 | 8 | 10 | 810-05 | | 179 | | | | | |

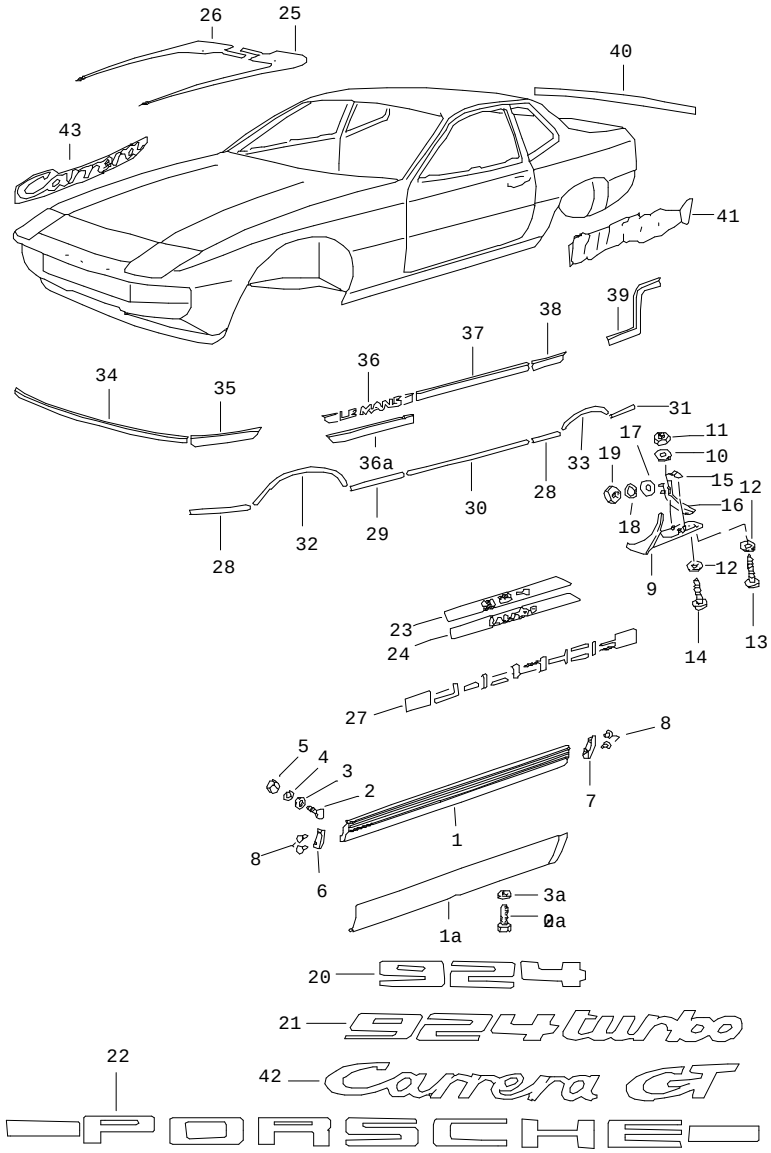


| Pos | Part Number | Name | Remarks | Qty | Model |
|---|---|---|---|---|---|
| | | sill cover<br>insignias<br>wheel opening | | | |
| 1 | 477 853 727 A | sill cover | /L | 1 | 924/TURBO |
| (1) | 477 853 728 A | sill cover | /R | 1 | 924/TURBO |
| 1A | 937 559 727 00 | sill cover | /L | 1 | GT |
| (1A) | 937 559 728 00 | sill cover | /R | 1 | GT |
| 2 | 477 809 683 | screw | | 2 | 924/TURBO |
| 2A | E 999 217 018 07 | hexagon-head bolt<br>M 5 X 12 | | 6 | GT |
| 3 | N 011 525 13 | washer<br>A 8,4 | | 2 | 924/TURBO |
| 3A | 937 559 127 00 | washer | | 6 | GT |
| 4 | N 012 038 1 | lock ring<br>8 | | 2 | 924/TURBO |
| 5 | 900 076 025 02 | hexagon nut<br>M 8 | | 2 | 924/TURBO |
| (6) | 477 853 735 A | cap | /V/L<br>/H/R | 2 | 924/TURBO |
| (7) | 477 853 736 A | cap | /V/R<br>/H/L | 2 | 924/TURBO |
| 8 | N 900 921 01 | blind rivet<br>5 X 8 | | 8 | 924/TURBO |
| 9 | 477 853 383 | wheel cover | /L | 1 | |
| (9) | 477 853 384 | wheel cover | /R | 1 | |
| 10 | N 011 692 3 | washer<br>5,1 | | 8 | |
| (10) | 211 853 611 | sealing washer | | 6 | |
| 11 | N 021 196 1 | lock nut<br>M 5 | | 8 | |
| 12 | 900 025 002 02 | washer | | 4 | |
| 13 | N 013 964 4 | tapping screw<br>B 4,2 X 16 | | 2 | |

| Pos | Part Number | Name | Remarks | Qty | Model |
|---|---|---|---|---|---|
| 14 | 900 143 031 02 | oval-head sheetmetal screw<br>B 4,2 X 9,5 | | 2 | |
| 15 | N 012 068 1 | clamping washer | | 2 | |
| 16 | 477 853 405 | support | | 2 | |
| 17 | 900 025 003 02 | washer<br>A 5,3 | | 4 | |
| 18 | N 012 005 3 | lock ring<br>B 5 | | 4 | |
| 19 | N 011 005 14 | hexagon nut<br>M 5 | | 4 | |
| 20 | E 477 853 625 B | logo<br>adhesive film<br>black | /H | 1 | 924 |
| (20) | E 477 853 625 C | logo<br>adhesive film<br>silver | /H | 1 | 924 |
| 21 | E 477 853 627 B | logo<br>adhesive film<br>black | /H | 1 | TURBO |
| (21) | E 477 853 627 C | logo<br>adhesive film<br>silver | /H | 1 | TURBO |
| 22 | 477 853 635 B | logo<br>adhesive film<br>black | /H | 1 | |
| 22 | 477 853 635 C | logo<br>adhesive film<br>silver | /H | 1 | |
| 23 | E 477 853 721 B | logo<br>adhesive film<br>door sill | /L | 1 | 924 |
| (23) | 477 853 722 B | logo<br>adhesive film<br>door sill | /R | 1 | 924 |
| 24 | E 477 853 721 | logo<br>adhesive film<br>door sill | /L | 1 | TURBO |
| (24) | E 477 853 722 | logo<br>adhesive film<br>door sill | /R | 1 | TURBO |
| 25 | E 477 853 665 | logo<br>-S-<br>adhesive film<br>light<br>cover | /L<br><br><br><br>/V | 1 | 924:M 471 |
| (25) | E 477 853 665 A | logo<br>-S-<br>adhesive film<br>dark<br>cover | /L<br><br><br><br>/V | 1 | 924:M 471 |
| 26 | 477 853 666 | logo<br>-S-<br>adhesive film<br>light<br>cover | /R<br><br><br><br>/V | 1 | 924:M 471 |
| (26) | 477 853 666 A | logo<br>-S-<br>adhesive film<br>dark<br>cover | /R<br><br><br><br>/V | 1 | 924:M 471 |
| 27 | E 911 559 319 06 | logo<br>porsche<br>adhesive film<br>black<br>hatched | | 2 | |
| (27) | 911 559 319 07 | logo<br>porsche<br>adhesive film<br>white<br>hatched | | 2 | |
| | | stripe<br>upper<br>moulding<br>black | | | |
| - | 477 853 641 | lateral straight | | * | |
| 28 | - | 300 MM | | 4 | |
| 29 | - | 420 MM | | 2 | |
| 30 | - | 1150 MM | | 2 | |
| 31 | - | 500 MM | | 2 | |

| Pos | Part Number | Name | Remarks | Qty | Model |
|---|---|---|---|---|---|
| 32 | 477 853 637 | wheel opening | /L | 1 | |
| (32) | E 477 853 638 | wheel opening | /R | 1 | |
| 33 | 477 853 639 | wheel opening | /L | 1 | |
| (33) | 477 853 640 | wheel opening | /R | 1 | |
| | | stripe upper moulding beige | -80 | | |
| - | 477 853 641 AA | lateral straight | | * | |
| 28 | - | 300 MM | | 4 | |
| 29 | - | 420 MM | | 2 | |
| 30 | - | 1150 MM | | 2 | |
| 31 | - | 500 MM | | 2 | |
| 32 | E 477 853 637 AA | wheel opening | /L | 1 | |
| (32) | E 477 853 638 AA | wheel opening | /R | 1 | |
| 33 | E 477 853 639 AA | wheel opening | /L | 1 | |
| (33) | E 477 853 640 AA | wheel opening | /R | 1 | |
| | | stripe upper moulding red | -80 | | |
| - | 477 853 641 BA | lateral straight | | * | |
| 28 | - | 300 MM | | 4 | |
| 29 | - | 420 MM | | 2 | |
| 30 | - | 1150 MM | | 2 | |
| 31 | - | 500 MM | | 2 | |
| 32 | 477 853 637 BA | wheel opening | /L | 1 | |
| (32) | E 477 853 638 BA | wheel opening | /R | 1 | |
| 33 | 477 853 639 BA | wheel opening | /L | 1 | |
| (33) | 477 853 640 BA | wheel opening | /R | 1 | |
| | | stripe upper moulding brown | 81- | | |
| - | E 477 853 641 CA | lateral straight | | * | |
| 28 | - | 300 MM | | 4 | |
| 29 | - | 420 MM | | 2 | |
| 30 | - | 1150 MM | | 2 | |
| 31 | - | 500 MM | | 2 | |
| 32 | E 477 853 637 CA | wheel opening | /L | 1 | |
| (32) | E 477 853 638 CA | wheel opening | /R | 1 | |
| 33 | E 477 853 639 CA | wheel opening | /L | 1 | |
| (33) | 477 853 640 CA | wheel opening | /R | 1 | |
| | | stripe upper moulding grey | 81- | | |
| - | 477 853 641 DA | lateral straight | | * | |
| 28 | - | 300 MM | | 4 | |
| 29 | - | 420 MM | | 2 | |
| 30 | - | 1150 MM | | 2 | |
| 31 | - | 500 MM | | 2 | |
| 32 | E 477 853 637 DA | wheel opening | /L | 1 | |
| (32) | 477 853 638 DA | wheel opening | /R | 1 | |
| 33 | 477 853 639 DA | wheel opening | /L | 1 | |
| (33) | 477 853 640 DA | wheel opening | /R | 1 | |
| | | stripe upper moulding green | 81- | | |
| - | 477 853 641 EA | lateral straight | | * | |
| 28 | - | 300 MM | | 4 | |

| Pos | Part Number | Name | Remarks | Qty | Model |
|---|---|---|---|---|---|
| 29 | - | 420 MM | | 2 | |
| 30 | - | 1150 MM | | 2 | |
| 31 | - | 500 MM | | 2 | |
| 32 | 477 853 637 EA | wheel opening | /L | 1 | |
| (32) | E 477 853 638 EA | wheel opening | /R | 1 | |
| 33 | E 477 853 639 EA | wheel opening | /L | 1 | |
| (33) | 477 853 640 EA | wheel opening | /R | 1 | |
| | | stripe<br>upper<br>moulding<br>GABUNGRAU | 82- | | |
| - | E 477 853 641 FA | lateral straight | | * | |
| 28 | - | 300 MM | | 4 | |
| 29 | - | 420 MM | | 2 | |
| 30 | - | 1150 MM | | 2 | |
| 31 | - | 500 MM | | 2 | |
| 32 | E 477 853 637 FA | wheel opening | /L | 1 | |
| (32) | E 477 853 638 FA | wheel opening | /R | 1 | |
| 33 | E 477 853 639 FA | wheel opening | /L | 1 | |
| (33) | 477 853 640 FA | wheel opening | /R | 1 | |
| | | stripe<br>yellow-black-red | 81<br>82 | | LE MANS<br>(CH) |
| 34 | E 477 853 643 | decorative film | /V | 1 | |
| 35 | 477 853 643 A | decorative film | /L | 1 | |
| (35) | 477 853 643 B | decorative film | /R | 1 | |
| 36 | 477 853 643 C | decorative film | /L | 1 | LE MANS |
| 36A | E 477 853 643 M | decorative film | /L | 1 | (CH) |
| (36) | 477 853 643 D | decorative film | /R | 1 | LE MANS |
| (36A) | 477 853 643 N | stripe | /R | 1 | (CH) |

| Pos | Part Number | Name | Remarks | Qty | Model |
|---|---|---|---|---|---|
| 37 | E 477 853 643 E | decorative film | /L | 1 | |
| (37) | 477 853 643 F | decorative film | /R | 1 | |
| 38 | 477 853 643 G | decorative film | /L | 1 | |
| (38) | 477 853 643 H | decorative film | /R | 1 | |
| 39 | 477 853 643 J | decorative film | /L | 1 | |
| (39) | 477 853 643 K | decorative film | /R | 1 | |
| 40 | 477 853 643 L | decorative film | | 1 | |
| 41 | 477 853 633 | logo<br>adhesive film<br>dolomite grey<br>side section | /L<br><br><br>/H | 1 | TURBO |
| (41) | E 477 853 634 | logo<br>adhesive film<br>dolomite grey<br>side section | /R<br><br><br>/H | 1 | TURBO |
| 42 | E 937 559 217 00 | logo<br>adhesive film<br>black | /H | 1 | GT |
| 42 | E 937 559 217 01 | logo<br>adhesive film<br>red | /H | 1 | GT |
| 43 | E 937 559 212 00 | logo<br>adhesive film<br>black<br>wing | /R<br><br><br>/V | 1 | GT |
| 43 | 937 559 212 01 | logo<br>adhesive film<br>red<br>wing | /R<br><br><br>/V | 1 | GT |

- -- E N D -- -

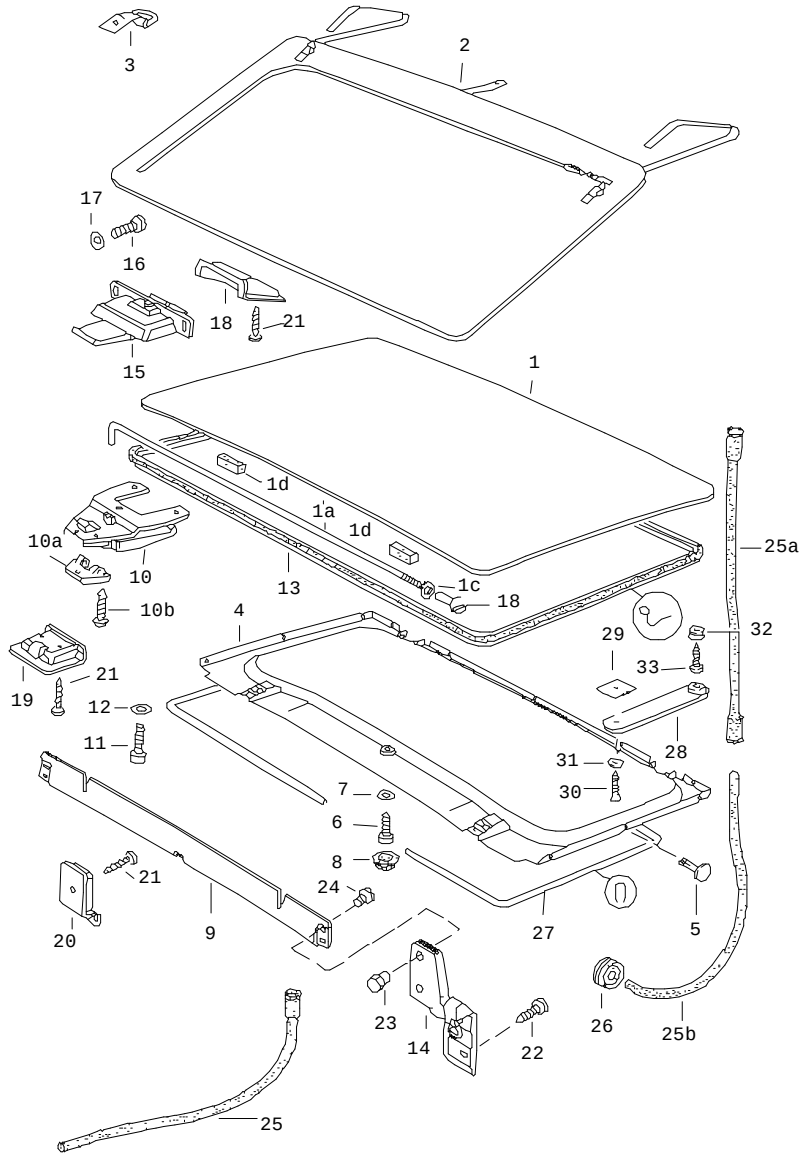


| Pos | Part Number | Name | Remarks | Qty | Model |
|---|---|---|---|---|---|
| | | roof | -83 | | +M 650 |
| 1 | 477 871 021 | roof | | 1 | |
| 1A | 477 871 761 | tensioning device | | 1 | |
| 1B | 477 871 763 A | threaded sleeve | | 1 | |
| 1C | N 011 524 7 | washer<br>B 6 | | 1 | |
| 1D | 477 871 789 | sealing strip | | 2 | |
| 2 | 477 871 027 | pocket | | 1 | |
| | 05T | black | | | |
| | 21S | brown<br>F >>92DN4 02148<br>F >>93DN1 00189 | | | 924<br>TURBO |
| 2 | 477 871 027 | pocket | | 1 | |
| | 4RB | brown<br>F 92DN4 02149>><br>F 93DN1 00190>> | | | 924<br>TURBO |
| 3 | 477 871 029 | support<br>pocket | | 1 | |
| | 041 | black | | | |
| | 90V | dark brown | | | |
| 4 | 477 871 047 B | lining | | 1 | |
| | 05T | black | | | |
| | 21S | brown | -82 | | |
| | 4RB | brown | 83- | | |
| | 1DB | black | | | |
| 5 | 477 871 053 | clip | | 11 | |
| 6 | 311 867 167 | tapping screw<br>4,2 | | 1 | |
| 7 | 900 151 028 02 | washer<br>4,3 | | 1 | |
| 8 | 311 867 169 | cap | | 1 | |

| Pos | Part Number | Name | Remarks | Qty | Model |
|---|---|---|---|---|---|
| | 01C | black | | | |
| | 90V | brown | | | |
| 9 | 944 564 993 00 | air deflector | | 1 | |
| 10 | 477 871 217 | roof catch | /V | 2 | |
| 10A | 477 871 219 | bearing bracket | | 2 | |
| | 01C | black | | | |
| 10B | N 033 174 1 | countersunk-head screw<br>3 X 6 | | 6 | |
| 11 | N 033 018 1 | lens-head screw<br>M 5 X 12 | | 2 | |
| 12 | 999 704 605 07 | cone washer | | 2 | |
| (13) | 944 564 114 01 | gasket | | 1 | |
| 14 | 477 871 635 A | hinge | /L | 1 | |
| (14) | 477 871 636 A | hinge | /R | 1 | |
| 15 | 477 871 649 | roof catch | /H | 2 | |
| 16 | 900 146 003 02 | oval-head screw<br>AM 5 X 11 | | 8 | |
| 17 | N 012 222 4 | spring washer<br>B 5 | | 8 | |
| 18 | 477 871 651 A | locking bracket | | 2 | |
| 19 | 477 871 665 A | centring wedge | /V | 2 | |
| 20 | 477 871 683 A | bearing | | 1 | |
| 21 | N 013 964 4 | tapping screw<br>B 4,2 X 16 | | 9 | |
| 22 | 900 143 031 02 | oval-head sheetmetal screw<br>B 4,2 X 9,5 | | 4 | |
| 23 | 477 871 701 A | cap nut | | 4 | |
| 24 | 477 837 959 | self-lock. fillister screw | | 4 | |
| 25 | 321 877 233 C | water drain hose | /V | 2 | |
| 25A | 944 564 235 00 | water drain hose | /L/H | 1 | |
| 25B | 944 564 237 00 | water drain tube | /L/H | 1 | |
| (25A) | 944 564 064 00 | water drain hose | /R/H | 1 | |
| (25B) | 944 564 238 00 | water drain tube | /R/H | 1 | |
| 26 | 021 119 569 | rubber sleeve | | X | |
| 27 | 944 564 621 00 | protective edging | | 1 | |
| 28 | 477 871 501 | securing strap | | 1 | |
| | 43S | black | | | |
| | 87S | brown<br>F >>92DN4 02148<br>F >>93DN1 00189 | | | 924<br>TURBO |
| | 4RB | brown<br>F 92DN4 02149>><br>F 93DN1 00190>> | | | 924<br>TURBO |
| 29 | 477 871 505 | reinforcement plate | | 1 | |
| 30 | N 014 091 4 | tapping screw<br>B 3,9 X 16 | | 1 | |
| 31 | N 011 590 1 | cone washer | | 1 | |
| 32 | 477 871 509 | ball knob | | 1 | |
| 33 | 900 143 003 00 | tapping screw<br>B 3,5 X 16 | | 1 | |
| 34 | E 477 871 159 | lever | | 2 | |
| 35 | E N 013 327 1 | roll pin<br>3 X 18 | | 2 | |

- -- E N D -- -

| Model | Year | MG | SG | Illustration | Restrictions | Update | | | | |
|---|---|---|---|---|---|---|---|---|---|---|
| 924 | 85 | 8 | 11 | 811-05 | | 179 | 10:15 | 16.08.2004 | PORSCHE | PET | PORSCHE |

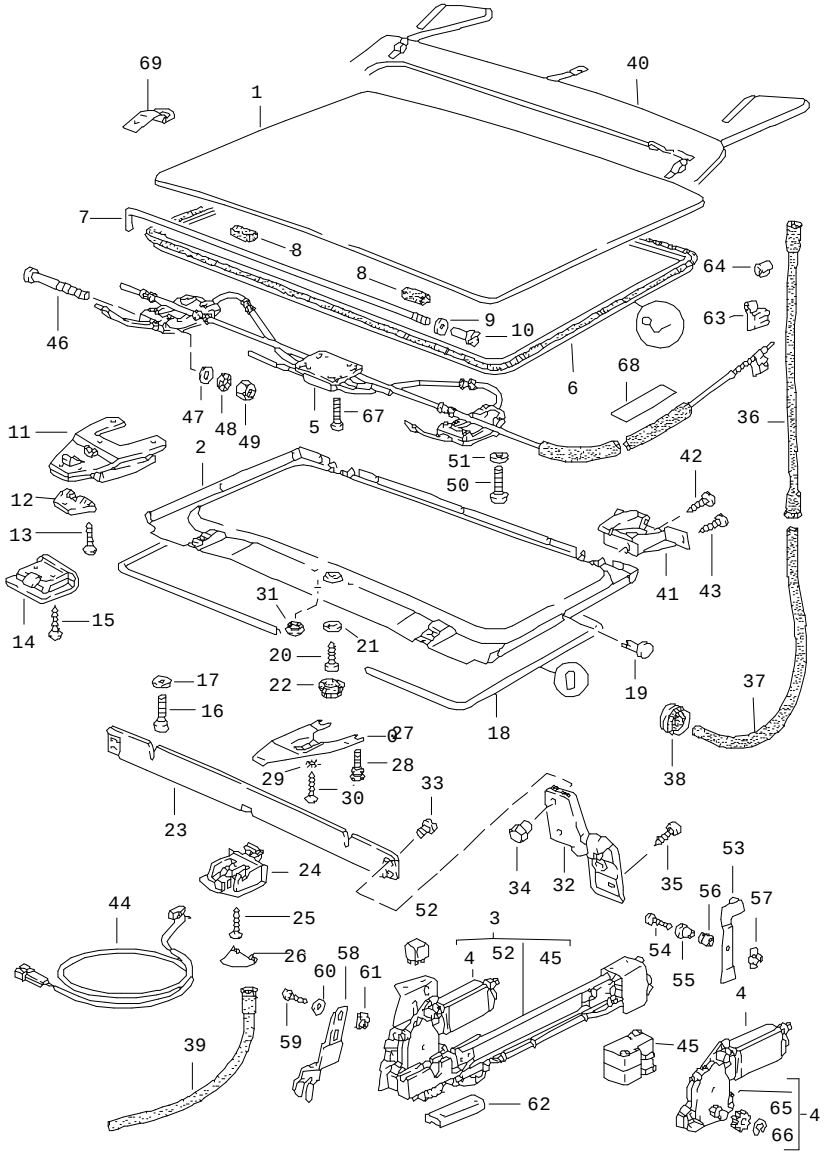


| Pos | Part Number | Name | Remarks | Qty | Model |
|---|---|---|---|---|---|
| | | lifting roof | 84- | | +M 650 |
| 1 | 944 564 021 01 | roof | | 1 | |
| 2 | 944 564 047 00 | lining | | 1 | |
| | 05T | black | | | |
| | 4RB | brown | | | |
| 3 | 944 624 055 00 | electric drive | | 1 | |
| 4 | 944 624 011 00 | electric motor | | 1 | |
| 5 | 944 564 941 00 | assembly kit<br>see tpi<br>group<br>8<br>NR. 43 | | 1 | |
| 6 | 944 564 114 01 | gasket | | 1 | |
| 7 | 477 871 761 | tensioning device | | 2 | |
| 8 | 477 871 789 | sealing strip | | 2 | |
| 9 | N 012 226 5 | spring washer<br>B 6 | | 2 | |
| 10 | 477 871 763 A | threaded sleeve | | 2 | |
| 11 | 477 871 217 | roof catch | /V | 2 | |
| 12 | 477 871 219 | bearing bracket | | 2 | |
| | 01C | black | | | |
| 13 | N 033 174 1 | countersunk-head screw<br>M 3 X 6 | | 6 | |
| 14 | 477 871 665 A | centring wedge | /V | 2 | |
| 15 | N 013 964 4 | tapping screw<br>B 4,2 X 16 | | 4 | |
| 16 | N 033 018 1 | lens-head screw<br>M 5 X 12 | | 2 | |
| 17 | 999 704 605 07 | cone washer | | 2 | |
| 18 | 944 564 621 00 | protective edging | | 1 | |
| 19 | 477 871 053 | clip | | 11 | |

| Pos | Part Number | Name | Remarks | Qty | Model |
|---|---|---|---|---|---|
| 20 | 311 867 167 | tapping screw | | 1 | |
| 21 | 900 151 028 02 | washer | | 1 | |
| 22 | 311 867 169 | cap | | 1 | |
| | 01C | black | | | |
| | 90V | brown | | | |
| 23 | 944 564 093 00 | air deflector | | 1 | |
| 24 | 944 564 683 00 | bearing centre | | 1 | |
| 25 | N 013 964 4 | tapping screw 4,2 X 16 | | 1 | |
| 26 | 944 564 685 00 | flap | | 1 | |
| 27 | 944 564 223 00 | fastening part centre | | 1 | |
| 28 | 944 564 224 00 | adjusting screw | | 2 | |
| 29 | N 012 222 4 | spring washer A 5 | | 1 | |
| 30 | N 014 133 8 | oval-head screw M 5 X 12 | | 1 | |
| 31 | 944 564 233 00 | cap | | 3 | |
| | 01C | black | | | |
| | 90V | brown | | | |
| 32 | 477 871 635 A | hinge | /L | 1 | |
| (32) | 477 871 636 A | hinge | /R | 1 | |
| 33 | 477 837 959 | self-lock. fillister screw | | 4 | |
| 34 | 477 871 701 A | cap nut | | 4 | |
| 35 | 900 143 031 02 | oval-head sheetmetal screw B 4,2 X 9,5 | | 4 | |
| 36 | 944 564 235 00 | water drain hose | /L/H | 1 | |
| (36) | 944 564 064 00 | water drain hose | /R/H | 1 | |
| 37 | 944 564 237 00 | water drain tube | /L/H | 1 | |
| (37) | 944 564 238 00 | water drain tube | /R/H | 1 | |
| 38 | 021 119 569 | rubber sleeve | | X | |
| 39 | 321 877 233 C | water drain hose | /V | 2 | |
| 40 | 477 871 027 | pocket | | 1 | |
| | 05T | black | | | |
| | 4RB | brown | | | |
| 41 | 944 564 161 00 | guide | /L/H | 1 | |
| (41) | 944 564 162 00 | guide | /R/H | 1 | |
| 42 | N 014 133 8 | oval-head screw M 5 X 12 | | 2 | |
| 43 | N 014 264 4 | oval-head screw AM 5 X 10 | | 4 | |
| 44 | 944 613 033 00 | microswitch centre | /V | 1 | |
| 45 | 944 613 127 00 | microswitch | | 2 | |
| 46 | N 100 718 01 | pan-head screw M 5 X 70 | | 2 | |
| 47 | 900 025 003 02 | washer A 5,3 | | 2 | |
| 48 | N 012 104 2 | serrated lock washer 5,3 | | 2 | |
| 49 | N 011 005 14 | hexagon nut M 5 | | 2 | |
| 50 | 999 218 005 02 | pan-head screw M 6 | | 4 | |
| 51 | N 011 524 7 | washer A 6,4 | | 4 | |
| 52 | 431 951 253 D | relay electric drive | | 2 | |
| 53 | 944 564 521 00 | support | | 1 | |
| 54 | E N 013 967 5 | tapping screw BZ 4,2 X 19 | | 1 | |
| 55 | 944 624 415 00 | spacer sleeve | | 1 | |

| Pos | Part Number | Name | Remarks | Qty | Model | Pos | Part Number | Name | Remarks | Qty | Model |
|---|---|---|---|---|---|---|---|---|---|---|---|
| 56 | 944 624 417 00 | rubber sleeve | | 1 | | | | | | | |
| 57 | N 902 577 01 | speed nut<br>B 4,2 | | 1 | | | | | | | |
| 58 | 944 564 433 00 | support | | 1 | | | | | | | |
| 59 | N 013 884 4 | tapping screw<br>BZ 4,8 X 13 | | 2 | | | | | | | |
| 60 | E N 012 201 2 | washer<br>5,5 | | 2 | | | | | | | |
| 61 | 999 591 722 02 | speed nut<br>B 4,8 X 19 | | 2 | | | | | | | |
| 62 | 944 564 517 00 | cover | | 1 | | | | | | | |
| 63 | 944 564 425 01 | driver | | 1 | | | | | | | |
| 64 | E 944 564 427 00 | clamping sleeve | | 1 | | | | | | | |
| 64 | E 944 564 427 00 | clamping sleeve | | 1 | | | | | | | |
| 65 | 944 564 437 00 | pinion | | 1 | | | | | | | |
| 66 | 900 116 003 02 | circlip | | 1 | | | | | | | |
| 67 | N 014 745 2 | pan-head screw<br>M 6 X 14, MICROVERKAPSELT | | 4 | | | | | | | |
| 68 | 944 556 441 00 | felt strip | | 2 | | | | | | | |
| | | - -- E N D -- - | | | | | | | | | |

| Model | Year | MG | SG | Illustration | Restrictions | Update | | | | |
|---|---|---|---|---|---|---|---|---|---|---|
| 924 | 85 | 8 | 12 | 812-00 | | 179 | 10:15 | 16.08.2004 | PORSCHE | PET | PORSCHE |

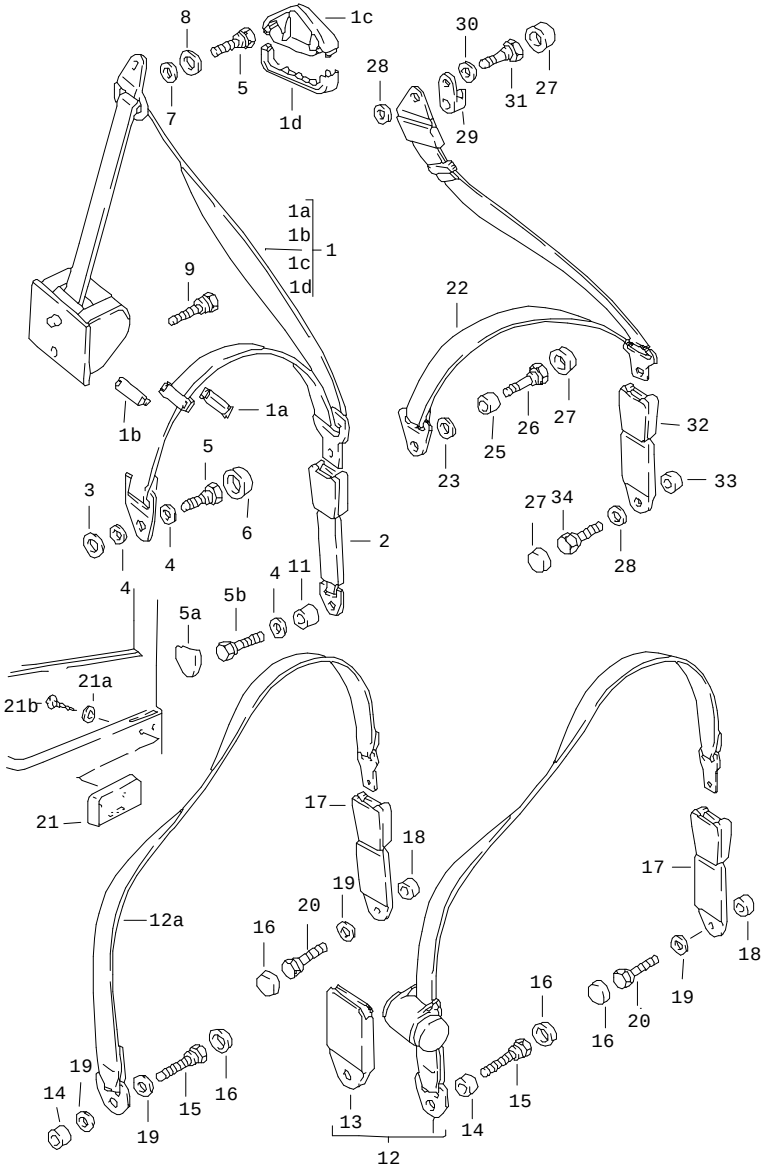


| Pos | Part Number | Name | Remarks | Qty | Model |
|---|---|---|---|---|---|
| | | seat belt | | | |
| 1 | 477 857 705 E | seat belt | /L -84 | 1 | |
| (1) | 477 857 705 G | seat belt | /L -84 | 1 | (AUS) |
| 1 | 944 803 125 00 | seat belt | /L 85- | 1 | |
| (1) | 477 857 706 E | seat belt | /R -84 | 1 | |
| (1) | 477 857 706 G | seat belt | /R -84 | 1 | (AUS) |
| 1 | 944 803 126 00 | seat belt | /R 85- | 1 | |
| 1A | 928 803 151 02 | clip<br>upper part | | 2 | |
| 1B | 928 803 153 02 | clip<br>lower part | | 2 | |
| 1C | 928 803 141 00 | cover | | 2 | |
| 1D | 928 803 143 00 | cover | | 2 | |
| (1C) | 944 803 141 00 | cover | 86 | 1 | |
| | 70B | black | | | |
| 2 | 928 803 183 05 | seat-belt buckle | -84 | 2 | |
| (2) | 928 803 183 11 | seat-belt buckle | 85- | 2 | |
| 3 | 111 857 707 A | spacer | | 2 | |
| 4 | 911 803 533 00 | cup spring | | 2 | |
| 5 | 111 857 793 E | fastening screw | | 4 | |
| 5A | 477 857 889 | cap | | 2 | |
| 5B | 111 857 793 E | fastening screw | | 2 | |
| 6 | 811 857 845 | cap<br>11,5 | | 2 | |
| 7 | 928 803 212 02 | spacer | | 2 | |
| 8 | W 928 803 157 02 | washer | | 2 | |
| 9 | 111 857 799 A | fastening screw | | 2 | |
| 11 | 928 803 259 02 | spacer sleeve | | 2 | |

| Pos | Part Number | Name | Remarks | Qty | Model |
|---|---|---|---|---|---|
| | | lap belt<br>automatic | -81 | | |
| 12 | E 477 857 787 B | belt | | 2 | |
| 13 | 477 857 750 B | cap | | 2 | |
| 14 | 901 803 116 40 | spacer sleeve<br>4 MM | -80 | 2 | 924 |
| (14) | 928 803 259 02 | spacer sleeve<br>12 MM | -80<br>81- | 2 | TURBO<br>924 M 603<br>924 |
| 15 | 111 857 793 E | fastening screw<br>30 MM | -80 | 2 | 924 |
| (15) | 803 019 811 B | screw<br>36,5 MM | -80<br>81- | 2 | TURBO<br>924 M 603<br>924 |
| 16 | 811 857 845 | cap | | 4 | |
| 17 | 477 857 739 A | seat-belt buckle | | 2 | |
| 18 | 477 857 643 | spacer sleeve | | 2 | |
| 19 | 211 857 771 | washer | | 2 | |
| 20 | 477 857 853 | screw | | 2 | |
| | | lap belt<br>manual | 82- | | |
| 12A | 477 857 795 | lap belt | | 2 | |
| 14 | 928 803 259 02 | spacer sleeve | | 2 | |
| 15 | 111 857 793 E | fastening screw | | 4 | |
| 16 | 811 857 845 | cap | | 4 | |
| 17 | 477 857 739 A | seat-belt buckle | | 2 | |
| 18 | 477 857 643 | spacer sleeve | | 2 | |
| 19 | 211 857 771 | washer | | 6 | |
| 20 | 477 857 853 | screw | | 2 | |
| 21 | 477 857 375 A | support for seatbelt | | 2 | |
| | 01C | black | | | |

| Pos | Part Number | Name | Remarks | Qty | Model |
|---|---|---|---|---|---|
| | 89S | brown | | | |
| 21A | 900 151 027 02 | washer<br>B 5,3 X 15 | | 4 | |
| 21B | 900 146 003 02 | oval-head screw<br>M 5 X 11 | | 4 | |
| | | three-point seat belt<br>rear | | | |
| 22 | E 478 857 811 A | seat belt<br>manual | | 2 | (AUS) |
| (1) | 945 803 021 00 | seat belt | /L | 1 | (AUS) (N) |
| 1 | 945 803 021 01 | seat belt<br>automatic | /L | 1 | (AUS)(N)<br>(SF) |
| (1) | 945 803 022 01 | seat belt<br>automatic | /R | 1 | (AUS)(N)<br>(SF) |
| 23 | 477 857 823 | reducing ring | | 2 | |
| 25 | 901 803 114 40 | spacer tube<br>8 MM | | 2 | |
| 26 | 111 857 799 A | fastening screw<br>20 MM | -80 | 2 | |
| (26) | 111 857 799 | screw<br>30 MM | -80<br>81- | 2 | TURBO<br>924 M 603<br>924 |
| 27 | 811 857 845 | cap | | 6 | |
| 28 | 211 857 771 | washer | | 4 | |
| 8 | 928 803 157 02 | washer | 1.84- | 2 | |
| 7 | 945 803 311 00 | spacer ring | | 2 | |
| 31 | 111 857 793 E | fastening screw | | 2 | |
| 32 | 477 857 739 A | seat-belt buckle | | 2 | |
| 33 | 477 857 643 | spacer sleeve | | 2 | |
| 34 | 477 857 853 | screw | | 2 | |
| (9) | 911 803 150 00 | screw | /H 1.84- | 2 | |
| | | - -- E N D -- - | | | |

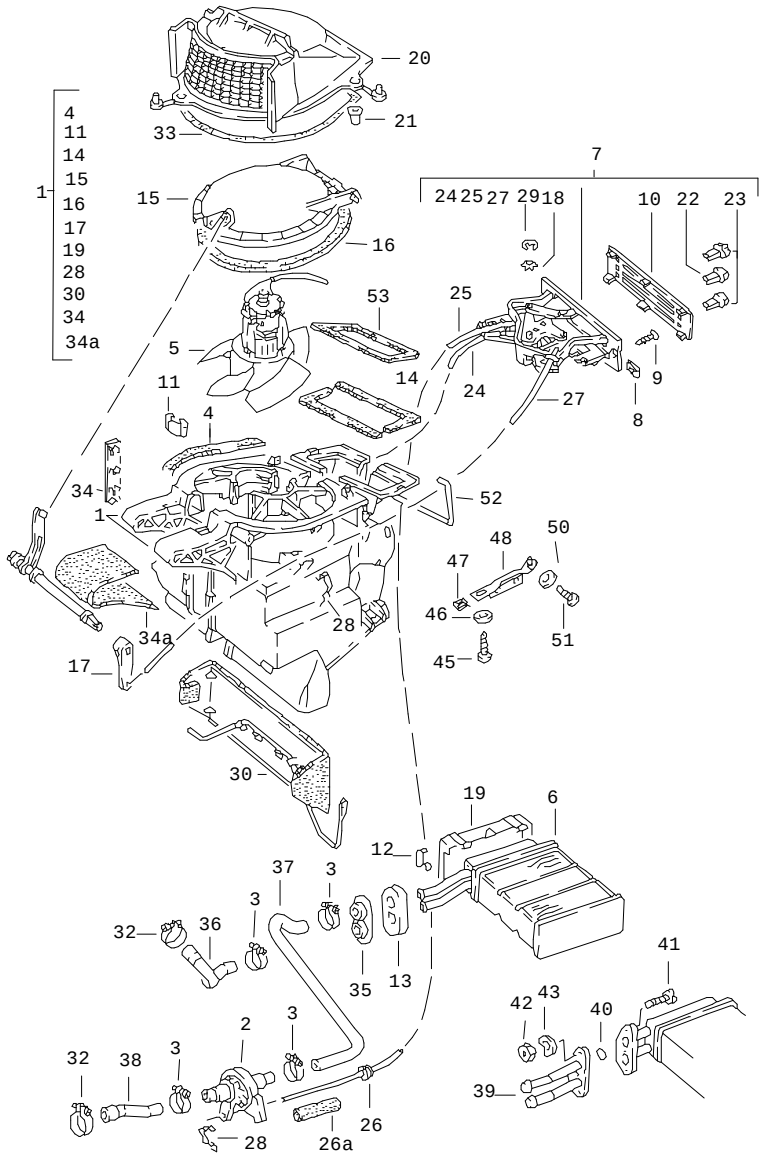


| Pos | Part Number | Name | Remarks | Qty | Model |
|---|---|---|---|---|---|
| | | heater<br>heat exchanger | | | |
| | | F >>92CN4 02197<br>F >>93CN1 00305<br>F >>93BN7 00450 | | | 924<br>TURBO<br>GT |
| 1 | E 477 819 014 | flap control box | | 1 | |
| 2 | 477 819 017 | heater valve | | 1 | |
| 3 | 999 512 346 00 | hose clamp<br>LC 16-25 | | 5 | |
| 4 | 321 819 019 | gasket | | 2 | |
| 5 | 321 819 021 | blower motor | | 1 | |
| 6 | 477 819 030 | heat exchanger | | 1 | |
| 7 | 477 819 021 | control switch | | 1 | |
| - | 999 920 006 07 | clamp | | 2 | |
| - | 477 819 057 | support | | 1 | |
| 8 | 477 819 789 | speed nut<br>16 X 12,2 | | 4 | |
| 9 | E N 014 100 1 | tapping screw<br>B 4,8 X 25 | | 4 | |
| 10 | 477 819 043 B | cover | | 1 | |
| 11 | 321 819 053 | clamp | | 2 | |
| 12 | 321 819 059 | clamp | | 7 | |
| 13 | 477 819 065 | damping piece | | 1 | |
| 14 | 321 819 089 | gasket<br>air duct | | 2 | |
| 15 | 321 819 107 | flap | | 1 | |
| 16 | 321 819 109 | gasket<br>flap | | 1 | |
| 17 | 321 819 123 | lever<br>flap | | 1 | |
| - | 321 819 117 | lever | | 1 | |

| Pos | Part Number | Name | Remarks | Qty | Model |
|---|---|---|---|---|---|
| | 01C | black<br>flap<br>upper | | | |
| 18 | 477 819 139 | cup spring | | 2 | |
| 19 | 477 819 347 | cover<br>heat exchanger | | 1 | |
| 20 | 477 819 245 | cover<br>flap | | 1 | |
| 21 | 477 819 253 | grommet | | 3 | |
| 22 | 477 819 319 | knob<br>centre | | 1 | |
| 23 | 477 819 319 A | knob | | 2 | |
| 24 | 477 819 279 | traction<br>F >>92BN4 02099<br>F >>93BN1 00344<br>F >>93BN7 00106 | | 1 | |
| 24 | 477 819 279 A | traction<br>F 92BN4 02100>><br>F 93BN1 00345>><br>F 93BN7 00107>> | | 1 | |
| 25 | 477 819 341 | traction | | 1 | |
| 26 | 477 819 849 | grommet | | 1 | |
| 26A | 477 819 340 | hose | | 1 | |
| 27 | 477 819 325 | traction<br>for flap | | 1 | |
| 28 | 477 819 343 | spring clamp | | 1 | |
| 29 | 900 116 003 02 | circlip<br>4 | | 2 | |
| 30 | E 321 819 361 | flap | | 1 | |
| 32 | 999 512 272 02 | hose clamp<br>LA 25 X 40 | | 1 | |
| - | E AMV 152 109 03 | sealing cord<br>9 MM $<br>roller<br>4,5 METER<br>740 MM | | X<br><br><br><br>1 | |
| 34 | 321 819 645 | clip | | 1 | |
| 34A | 477 819 345 | sealing strip | | 1 | |
| 35 | 823 819 699 A | drain bush | | 1 | |
| 36 | E 477 819 723 | hose | | 1 | |
| 37 | 477 819 725 | hose | | 1 | |
| - | N 020 269 1 | hose | | * | 924 |
| 38 | - | 85 MM | | 1 | |
| (38) | 931 106 271 01 | water hose | | 1 | TURBO |
| 39 | 477 819 869 | connecting flange<br>for heat exchanger | | 1 | |
| 40 | 021 101 173 | sealing ring<br>heat exchanger | | 2 | |
| 41 | N 010 296 2 | hexagon-head bolt<br>M 5 X 18 | | 3 | |
| 42 | N 011 005 14 | hexagon nut<br>M 5 | | 3 | |
| 43 | N 012 222 4 | spring washer<br>A 5 | | 3 | |
| 45 | N 013 968 7 | tapping screw<br>B 4,8 X 16 | | 1 | |
| 46 | N 012 104 2 | serrated lock washer<br>A 5,3 | | 1 | |
| 47 | 999 591 722 02 | speed nut<br>B 4,8 X 19 | | 1 | |
| 48 | 477 857 195 | bracket | | 1 | |
| (48) | 477 857 197 | bracket | | 1 | |
| 50 | N 011 524 7 | washer<br>A 6,4 | | 1 | |
| 51 | N 014 140 5 | oval-head screw<br>AM 6 X 15 | | 1 | |
| 52 | 477 857 809 | clamp | -81 | 1 | |
| (52) | 477 857 809 | clamp | 82- | 1 | |

| Model | Year | MG | SG | Illustration | Restrictions | Update | | | |
|---|---|---|---|---|---|---|---|---|---|
| 924 | 85 | 8 | 13 | 813-00 | | 179 | 10:15 | 16.08.2004 | PORSCHE PET PORSCHE |

| Pos | Part Number | Name | Remarks | Qty | Model | Pos | Part Number | Name | Remarks | Qty | Model |
|---|---|---|---|---|---|---|---|---|---|---|---|
| 53 | 477 857 887 A | gasket | | 1 | | | | | | | |
| 54 | 478 959 519 | switch | /RL | 1 | M 573 | | | | | | |
| 55 | 477 959 517 | rose | /RL | 1 | M 573 | | | | | | |
| 56 | 477 959 513 | knob | /RL | 1 | M 573 | | | | | | |
| | | - -- E N D -- - | | | | | | | | | |

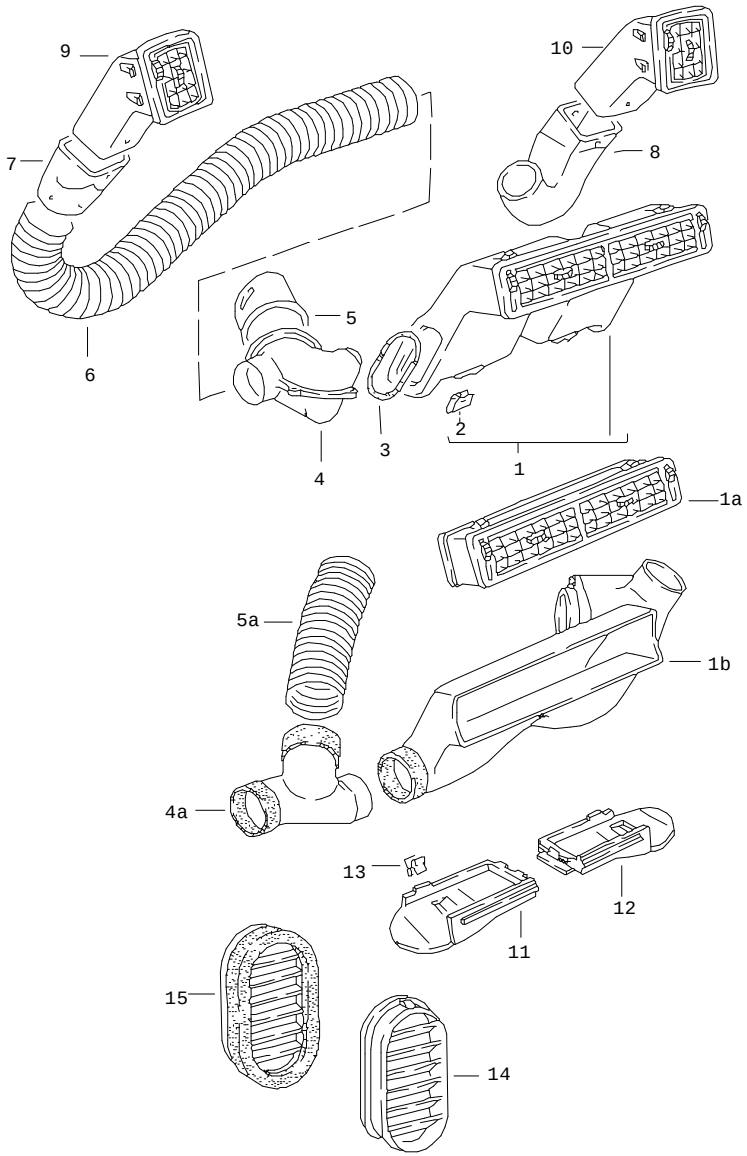


| Pos | Part Number | Name | Remarks | Qty | Model |
|---|---|---|---|---|---|
| | | air vent<br>air hose | | | |
| | | F >>92CN4 02197<br>F >>93CN1 00305<br>F >>93BN7 00450 | | | 924<br>TURBO<br>GT |
| 1 | 477 819 151 | centre nozzle<br>F >>92BN4 09218<br>F >>93BN1 01667 | | 1 | |
| | 01C | black | | | |
| | 89S | cadbury brown | | | |
| 1A | 477 819 173 A | centre nozzle<br>F 92BN4 09219>><br>F 93BN1 01668>> | | 1 | |
| | 01C | black | | | |
| | 89S | brown | | | |
| 1B | 477 820 361 | mixing chamber<br>F 92BN4 09219>><br>F 93BN1 01668>> | /LL | 1 | |
| (1B) | 478 820 361 | mixing chamber<br>F 92BN4 09219>><br>F 93BN1 01668>> | /RL | 1 | |
| 2 | E 477 819 263 | clamp<br>F >>92BN4 09218<br>F >>93BN1 01667 | | 2 | |
| 3 | 477 819 229 A | gasket<br>F >>92BN4 09218<br>F >>93BN1 01667 | | 2 | |
| 4 | 477 819 219 A | air distributor<br>F >>92BN4 09218<br>F >>93BN1 01667 | | 2 | |
| 4A | 477 820 539 | intermediate piece<br>F 92BN4 09219>><br>F 93BN1 01668>> | | 1 | |
| 5 | 477 819 223 | connecting piece<br>F >>92BN4 09218<br>F >>93BN1 01667 | /L | 1 | |
| 5A | 478 820 235 | air hose<br>F 92BN4 09219>><br>F 93BN1 01668>> | | 1 | |

| Pos | Part Number | Name | Remarks | Qty | Model |
|---|---|---|---|---|---|
| (5) | 477 819 224 | connecting piece<br>F >>92BN4 09218<br>F >>93BN1 01667 | /R | 1 | |
| 6 | 477 819 395 | hose<br>800 MM | | 2 | |
| 7 | 477 819 717 | connecting piece | /L | 1 | |
| 8 | 477 820 409 | connecting piece | /R | 1 | |
| 9 | 477 819 291 | side vent | /L | 1 | |
| | 01C | black | | | |
| | 89S | brown | | | |
| 10 | 477 819 292 | side vent | /R | 1 | |
| | 01C | black | | | |
| | 89S | brown | | | |
| 11 | 477 819 705 | air duct | /L | 1 | |
| 12 | E 477 819 706 | air duct | /R | 1 | |
| 13 | 477 819 212 | clip | | 2 | |
| 14 | 477 819 175 | cover<br>bleeding | | 2 | |
| 15 | 477 819 179 | cover<br>bleeding | /L | 1 | |
| (15) | 477 819 180 | cover<br>bleeding | /R | 1 | |
| | | - -- E N D -- - | | | |

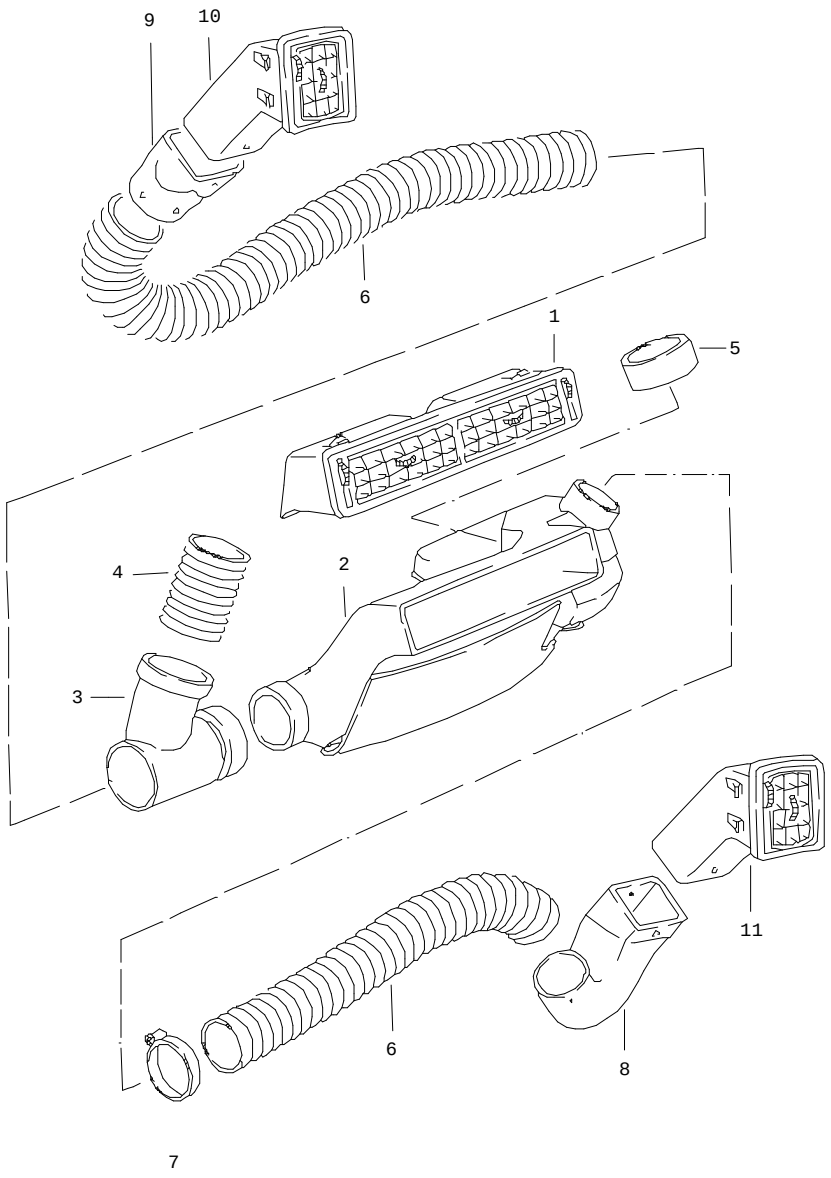


| Pos | Part Number | Name | Remarks | Qty | Model |
|---|---|---|---|---|---|
| | | air vent<br>air hose<br>left-hand drive | | | +M573 |
| | | F >>92CN4 02197<br>F >>93CN1 00305<br>F >>93BN7 00450 | | | 924<br>TURBO<br>GT |
| 1 | 477 819 173 | centre nozzle | | 1 | |
| | 01C | black | | | |
| | 89S | cadbury brown<br>F >>92A04 14338<br>F >>93A01 40995 | | | 924<br>TURBO |
| (1) | 477 819 151 A | centre nozzle | | 1 | |
| | 01C | black | | | |
| | 89S | cadbury brown<br>F 92A04 14339>>92BN4 09218<br>F 93A01 40996>>93BN1 01667 | | | 924<br>TURBO |
| (1) | 477 819 173 A | centre nozzle | | 1 | |
| | 01C | black | | | |
| | 89S | brown<br>F 92BN4 09219>><br>F 93BN1 01668>> | | | 924<br>TURBO |
| 2 | 477 820 413 | mixing chamber | | 1 | |
| 3 | 477 820 539 | intermediate piece | | 1 | |
| 4 | 477 820 221 | air hose<br>65 $ | | 1 | |
| 5 | 477 820 427 | air duct | | 1 | |
| 6 | 477 819 395 | hose<br>50 $ | | 2 | |
| 7 | 999 512 348 02 | hose clamp | | 1 | |
| - | 999 513 003 40 | tie-wrap | | 1 | |
| 8 | 477 820 409 | connecting piece | /R | 1 | |
| 9 | 477 819 717 | connecting piece | /L | 1 | |
| 10 | 477 819 291 | side vent | /L | 1 | |

| Pos | Part Number | Name | Remarks | Qty | Model |
|---|---|---|---|---|---|
| | 01C | black | | | |
| | 89S | brown | | | |
| 11 | 477 819 292 | side vent | /R | 1 | |
| | 01C | black | | | |
| | 89S | brown | | | |
| | | - -- E N D -- - | | | |

| Pos | Part Number | Name | Remarks | Qty | Model |
|---|---|---|---|---|---|

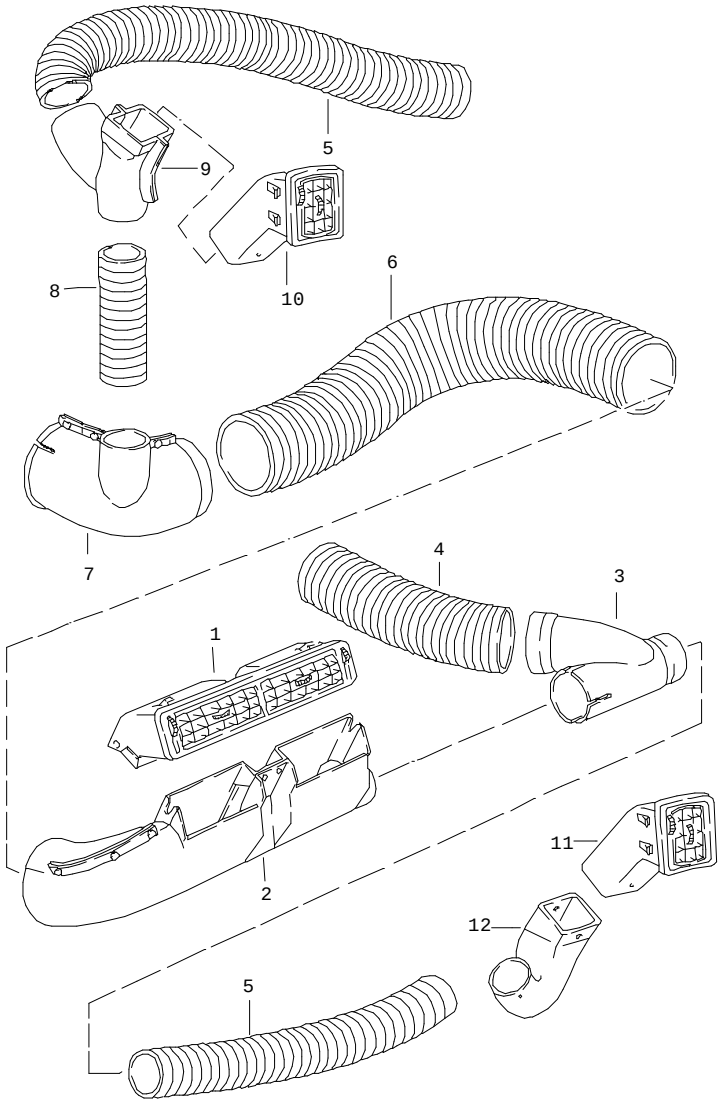


| Pos | Part Number | Name | Remarks | Qty | Model |
|---|---|---|---|---|---|
| | | air vent<br>air hose<br>right-hand drive | | | +M573 |
| | | F >>92CN4 02197<br>F >>93CN1 00305<br>F >>93BN7 00450 | | | 924<br>TURBO |
| 1 | 478 820 219 | centre nozzle<br>F >>92BN4 09218<br>F >>93BN1 01667 | | 1 | 924<br>TURBO |
| | 01C | black | | | |
| | 89S | brown | | | |
| (1) | 477 819 173 A | centre nozzle<br>F 92BN4 09219>><br>F 92BN1 01668>> | | 1 | 924<br>TURBO |
| | 01C | black | | | |
| | 89S | brown | | | |
| 2 | E 478 820 217 | air duct | | 1 | |
| (2) | 478 820 217 A | air duct | | 1 | |
| 3 | 478 820 215 | connecting piece | | 1 | |
| 4 | 478 820 235 | air hose<br>65 $ | | 1 | |
| 5 | 477 819 395 | hose<br>50 $ | | 2 | |
| 6 | 478 820 231 | hose<br>80 $ | | 1 | |
| 7 | 478 820 211 | branch piece | | 1 | |
| 8 | 478 820 233 | air hose<br>45 $ | | 1 | |
| 9 | 478 820 213 | connecting piece | | 1 | |
| 10 | 477 819 291 | side vent | /L | 1 | |
| | 01C | black | | | |
| | 89S | brown | | | |
| 11 | 477 819 292 | side vent | /R | 1 | |

| Model | Year | MG | SG | Illustration | Restrictions | Update | | | |
|---|---|---|---|---|---|---|---|---|---|
| 924 | 85 | 8 | 13 | 813-15 | | 179 | 10:16 | 16.08.2004 | PORSCHE PET PORSCHE |

| Pos | Part Number | Name | Remarks | Qty | Model | Pos | Part Number | Name | Remarks | Qty | Model |
|---|---|---|---|---|---|---|---|---|---|---|---|
| | 01C | black | | | | | | | | | |
| | 89S | brown | | | | | | | | | |
| 12 | 477 820 409 | connecting piece | /R | 1 | | | | | | | |
| | | - -- E N D -- - | | | | | | | | | |

| Model | Year | MG | SG | Illustration | Restrictions | Update | 10:16 | 16.08.2004 | PORSCHE | PET | PORSCHE |
|---|---|---|---|---|---|---|---|---|---|---|---|
| 924 | 85 | 8 | 13 | 813-20 | | 179 | | | | | |

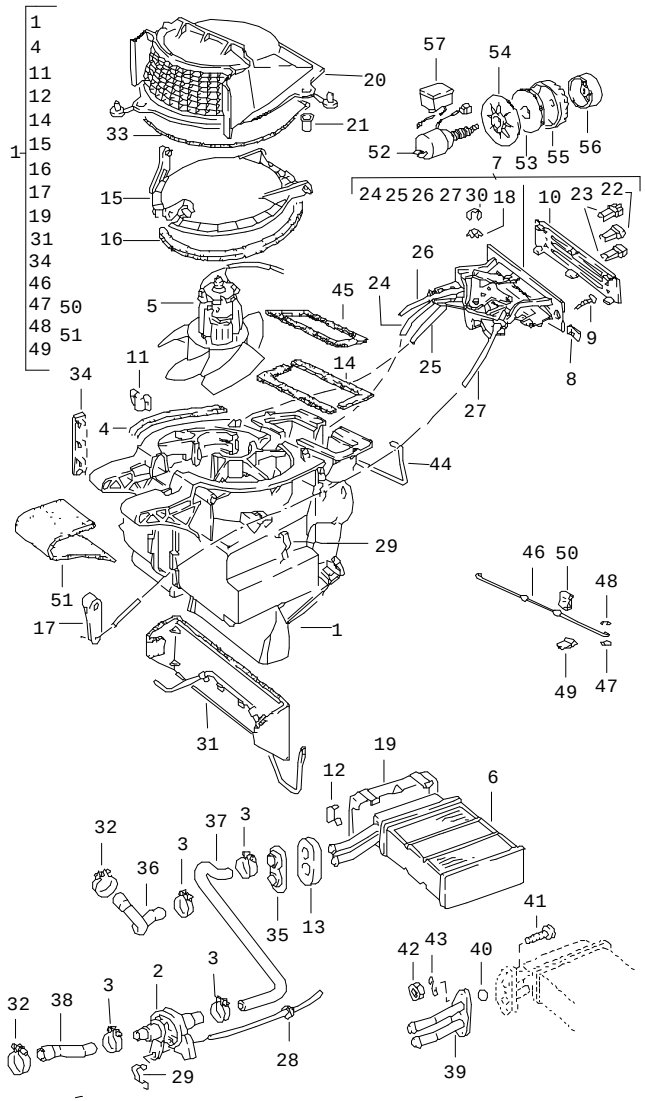


| Pos | Part Number | Name | Remarks | Qty | Model |
|---|---|---|---|---|---|
| | | heating<br>left-hand drive | | | +M 573 |
| | | F >>92CN4 02197<br>F >>93CN1 00305<br>F >>93BN7 00450 | | | 924<br>TURBO<br>GT |
| 1 | 477 820 014 | flap control box | | 1 | |
| 2 | 477 819 017 | heater valve | | 1 | |
| 3 | 999 512 346 00 | hose clamp<br>LC 16-25 | | 4 | |
| 4 | 321 819 019 | gasket | | 2 | |
| 5 | 321 819 021 | blower motor | | 1 | |
| 6 | 477 819 030 | heat exchanger | | 1 | |
| 7 | 477 819 021 A | control switch | | 1 | |
| 8 | 477 819 789 | speed nut<br>16 X 12,2 | | 2 | |
| 9 | E N 014 100 1 | tapping screw<br>B 4,8 X 25 | | 2 | |
| 10 | E 477 819 043 C | cover | | 1 | |
| 11 | 321 819 053 | clamp | | 2 | |
| 12 | 321 819 059 | clamp | | 7 | |
| 13 | 477 819 065 | damping piece | | 1 | |
| 14 | 321 819 089 | gasket<br>air duct | | 2 | |
| 15 | 321 819 107 | flap | | 1 | |
| 16 | 321 819 109 | gasket<br>flap | | 1 | |
| 17 | 321 819 123 | lever<br>flap | | 1 | |
| 18 | 477 819 139 | cup spring | | 2 | |
| 19 | 477 819 347 | cover<br>heat exchanger | | 1 | |
| 20 | 477 819 245 | cover<br>flap | | 1 | |

| Pos | Part Number | Name | Remarks | Qty | Model |
|---|---|---|---|---|---|
| 21 | 477 819 253 | grommet | | 3 | |
| 22 | 477 819 319 | knob<br>centre | | 1 | |
| 23 | 477 819 319 A | knob | | 2 | |
| 24 | 477 819 279 | traction<br>F >>92BN4 02099<br>F >>93BN1 00344<br>F >>93BN7 00106 | | 1 | |
| 24 | 477 819 279 A | traction<br>F 92BN4 02100>><br>F 93BN1 00345>><br>F 93BN7 00107>> | | 1 | |
| 25 | 477 820 275 | traction<br>flap | | 1 | |
| 26 | 477 819 341 | traction<br>valve | | 1 | |
| 27 | 477 819 325 | traction<br>flap<br>F >>92BN4 02574<br>F >>93BN1 00399<br>F >>93BN7 00138 | | 1 | |
| 27 | 477 819 325 | traction<br>flap<br>F 92BN4 02575>><br>F 93BN1 00400>><br>F 93BN7 00139>> | | 1 | |
| 28 | 477 819 849 | grommet | | 1 | |
| 28A | 477 819 340 | hose | | 1 | |
| 29 | 477 819 343 | spring clamp | | 1 | |
| 30 | 900 116 003 02 | circlip<br>4 | | 2 | |
| 31 | E 321 819 361 | flap | | 1 | |
| 32 | 999 512 272 02 | hose clamp<br>LA 25 X 40 | | 2 | |
| - | E AMV 152 109 03 | sealing cord<br>9 MM $<br>roller<br>4,5 METER<br>740 MM | | X<br><br><br><br>1 | |
| 34 | 321 819 645 | clip | | 1 | |
| 35 | 823 819 699 A | drain bush | | 1 | |
| 36 | E 477 819 723 | hose | | 1 | |
| 37 | 477 819 725 | hose | | 1 | |
| - | N 020 269 1 | hose | | * | 924 |
| 38 | - | 85 MM | | 1 | 924 |
| (38) | 931 106 271 01 | water hose | | 1 | TURBO |
| 39 | 477 819 869 | connecting flange<br>for heat exchanger | | 1 | |
| 40 | 021 101 173 | sealing ring<br>heat exchanger | | 2 | |
| 41 | N 010 296 2 | hexagon-head bolt<br>M 5 X 18 | | 3 | |
| 42 | N 011 005 14 | hexagon nut<br>M 5 | | 3 | |
| 43 | N 012 222 4 | spring washer<br>A 5 | | 3 | |
| 44 | 477 857 809 | clamp | -81 | 1 | |
| (44) | 477 857 809 | clamp | 82- | 1 | |
| 45 | 477 857 887 A | gasket | | 1 | |
| 46 | 477 819 281 | connecting rod | | 1 | |
| 47 | N 012 222 4 | spring washer | | 2 | |
| 48 | 900 116 003 02 | circlip | | 2 | |
| 49 | 477 819 343 | spring clamp | | 1 | |
| 50 | 477 819 285 | clip | | 1 | |
| 51 | 477 819 345 | sealing strip | | 1 | |
| 52 | 477 959 530 | air-conditioning switch | | 1 | |
| 53 | 477 959 526 | spacer | | 1 | |
| 54 | 477 959 527 | fastening washer | | 1 | |
| 55 | 477 959 528 | adjusting wheel | | 1 | |

| Model | Year | MG | SG | Illustration | Restrictions | Update | | | |
|---|---|---|---|---|---|---|---|---|---|
| 924 | 85 | 8 | 13 | 813-20 | | 179 | 10:16 | 16.08.2004 | PORSCHE PET PORSCHE |

| Pos | Part Number | Name | Remarks | Qty | Model | Pos | Part Number | Name | Remarks | Qty | Model |
|---|---|---|---|---|---|---|---|---|---|---|---|
| 56 | 477 959 529 | knob | | 1 | | | | | | | |
| 57 | 477 959 531 | booster | | 1 | | | | | | | |
| - | 477 820 523 | water drain hose | | 1 | | | | | | | |
| | | - -- E N D -- - | | | | | | | | | |

| Model | Year | MG | SG | Illustration | Restrictions | Update | 10:17 | 16.08.2004 | PORSCHE | PET | PORSCHE |
|---|---|---|---|---|---|---|---|---|---|---|---|
| 924 | 85 | 8 | 13 | 813-25 | | 179 | | | | | |

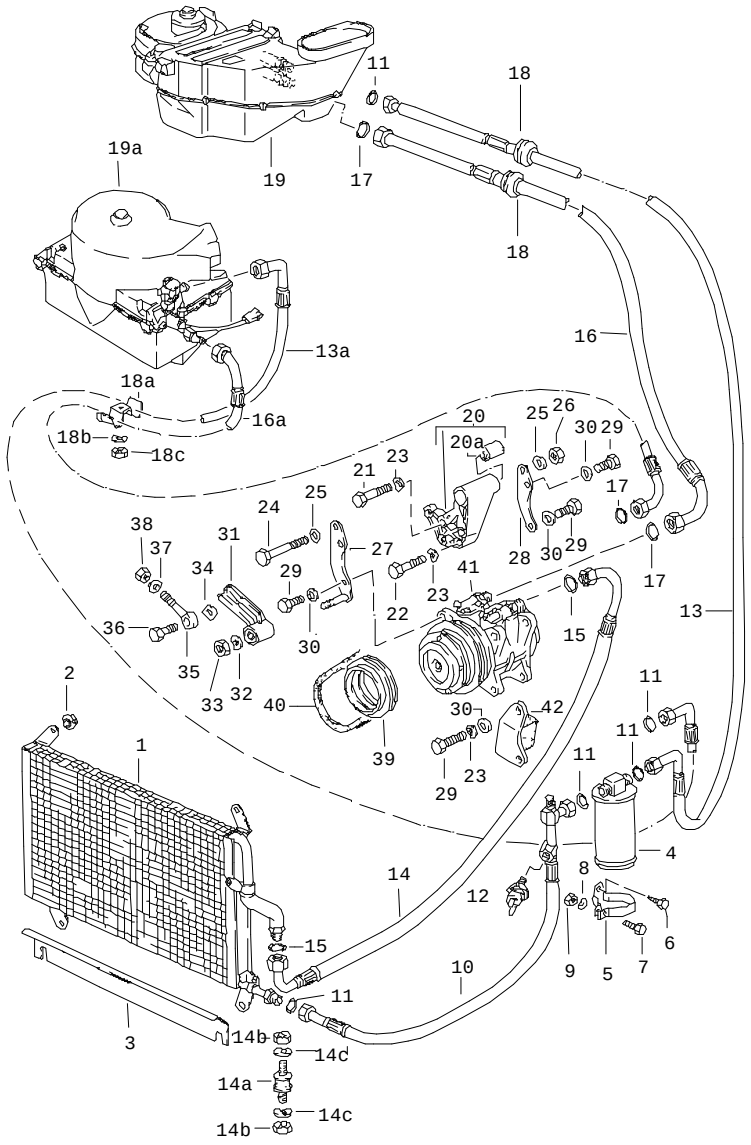


| Pos | Part Number | Name | Remarks | Qty | Model |
|---|---|---|---|---|---|
| | | air conditioner | | | +M 573 |
| 1 | 477 820 751 B | condenser | | 1 | |
| 2 | 477 820 773 | grommet | | 4 | |
| 3 | 477 853 717 A | cooling air duct | | 1 | |
| (4) | 944 573 943 00 | desiccator | | 1 | |
| 5 | 477 820 195 | support<br>fluid tank<br>F >>92CN4 00802<br>F >>93CN1 00087<br>F >>93BN7 00450 | | 1 | <br><br>924<br>TURBO<br>GT |
| (5) | 944 573 081 00 | support<br>fluid tank<br>F 92CN4 00803>><br>F 93CN1 00088>> | | 1 | <br><br>924<br>TURBO |
| 6 | N 013 884 5 | tapping screw<br>B 4,8 X 13 | | 2 | |
| 7 | N 010 264 4 | hexagon-head bolt<br>M 5 X 20 | | 1 | |
| 8 | N 012 005 3 | lock ring<br>5 | | 1 | |
| 9 | N 011 005 14 | hexagon nut<br>M 5<br>F >>92CN4 00802<br>F >>93CN1 00087<br>F >>93BN7 00450 | | 1 | <br><br>924<br>TURBO<br>GT |
| 10 | 477 820 423 | refrigerant line | | 1 | 924 |
| 10 | 477 820 423 | refrigerant line | /RL | 1 | TURBO |
| (10) | 477 820 423 A | refrigerant line | /LL | 1 | TURBO |
| 11 | 477 820 489 | o-ring | | 4 | |
| 12 | 959 613 137 00 | low pressure switch | | 1 | |
| 13 | 477 820 424 | refrigerant line<br>evaporator | /LL | 1 | |
| 13A | 478 820 735 | refrigerant line | /RL | 1 | |
| - | 999 513 003 40 | tie-wrap | | 1 | |
| 14 | 477 820 422 B | refrigerant line | | 1 | |

| Pos | Part Number | Name | Remarks | Qty | Model |
|---|---|---|---|---|---|
| 14A | 810 906 219 A | bonded rubber mounting | | 1 | |
| 14B | 900 076 010 02 | hexagon nut<br>M 6 | | 2 | |
| 14C | N 012 007 2 | lock ring<br>A 6 | | 2 | |
| 15 | 999 707 250 40 | o-ring | | 2 | |
| 16 | 477 820 425 | refrigerant line | /LL | 1 | 924 |
| (16) | 477 820 425 A | refrigerant line | /LL | 1 | TURBO |
| 16A | 478 820 723 A | refrigerant line | /RL | 1 | |
| 17 | 478 820 731 | o-ring | | 2 | |
| 18 | 901 573 143 00 | rubber sleeve | | 2 | |
| 18A | 477 820 757 | clip | /RL | 2 | |
| 18B | N 012 006 4 | lock ring<br>B 6 | /RL | 2 | |
| 18C | 900 076 010 02 | hexagon nut<br>M 6 | /RL | 2 | |
| 19 | E 477 820 002 | air conditioner<br>F >>92CN4 02197<br>F >>93CN1 00305<br>F >>93BN7 00450 | /LL | 1 | <br>924<br>TURBO<br>GT |
| 19 | 477 820 002 A | air conditioner<br>F 92CN4 02198>><br>F 93CN1 00306>><br>see group<br>8/13/30 | /LL | 1 | <br>924<br>TURBO |
| 19A | E 478 820 017 A | evaporator<br>see group<br>8/13/35 | /RL | 1 | |
| 20 | 047 260 877 E | bracket | | 1 | 924 |
| (20) | 931 101 014 00 | bracket | | 1 | TURBO |
| 20A | 047 260 905 C | rubber mounting | | 2 | |
| 21 | E 900 074 065 02 | hexagon-head bolt<br>M 10 X 70 | | 1 | |
| 22 | 900 074 063 02 | hexagon-head bolt<br>M 10 X 55 | | 2 | |
| 23 | N 012 230 6 | spring washer<br>B 10 | | 5 | |
| 24 | N 010 494 4 | hexagon-head bolt<br>M 10 X 125 | | 1 | |
| 25 | 900 025 008 09 | washer<br>A 10,5 | | 2 | |
| 26 | N 011 010 6 | hexagon nut<br>M 10 | | 1 | |
| 27 | 047 260 883 B | support<br>compressor | /V | 1 | |
| 28 | 047 260 859 C | support | /H | 1 | |
| 29 | N 040 125 1 | hexagon-head bolt<br>M 10 X 30 | | 6 | |
| 30 | 900 025 008 09 | washer<br>A 10,5 | | 6 | |
| 31 | 047 260 903 B | clamp | | 1 | |
| 32 | N 012 230 6 | spring washer<br>B 10 | | 1 | |
| 33 | N 011 010 6 | hexagon nut<br>M 10 | | 1 | |
| 34 | 047 260 947 A | washer | | 1 | |
| 35 | E N 900 798 01 | eye screw | | 1 | |
| 36 | 900 075 043 02 | hexagon-head bolt<br>M 10 X 30 | | 1 | |
| 37 | N 011 525 13 | washer | | 1 | |
| 38 | 311 101 463 | hexagon nut<br>M 8 | | 1 | |
| 39 | 046 105 255 F | v-belt pulley | | 1 | 924 |
| (39) | 477 105 255 | v-belt pulley | | 1 | TURBO |
| 40 | 047 260 849 A | v-belt | | 1 | |
| 41 | 047 260 803 | compressor<br>see group<br>8/13/40 | | 1 | |
| 42 | 047 260 823 B | vibration damper | | 1 | |

| Model | Year | MG | SG | Illustration | Restrictions | Update | | | |
|---|---|---|---|---|---|---|---|---|---|
| 924 | 85 | 8 | 13 | 813-25 | | 179 | 10:17 | 16.08.2004 | PORSCHE PET PORSCHE |

| Pos | Part Number | Name | Remarks | Qty | Model | Pos | Part Number | Name | Remarks | Qty | Model |
|---|---|---|---|---|---|---|---|---|---|---|---|
| | | - -- E N D -- - | | | | | | | | | |

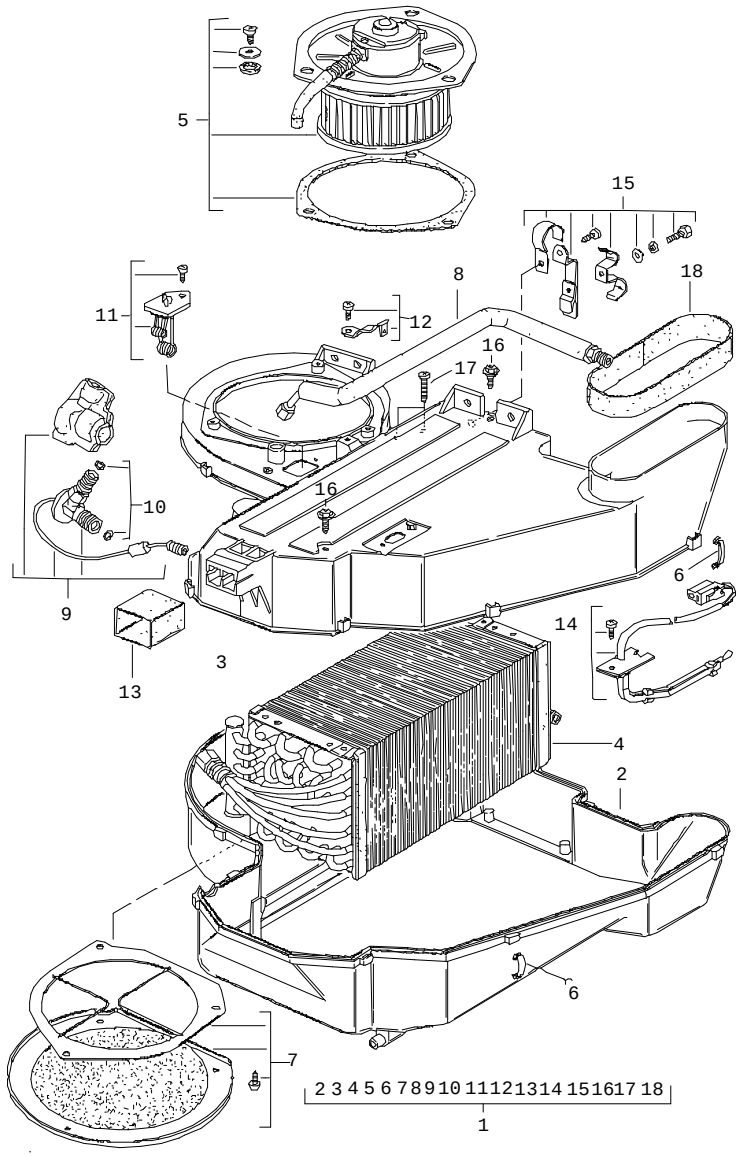


| Pos | Part Number | Name | Remarks | Qty | Model |
|---|---|---|---|---|---|
| | | air conditioner<br>left-hand drive | | | +M 573 |
| | | F >>92CN4 02197<br>F >>93CN1 00305<br>F >>93BN7 00458 | | | 924<br>TURBO<br>GT |
| 1 | E 477 820 002 | air conditioner | | 1 | |
| 2 | 477 820 483 | suction housing | | 1 | |
| 3 | 477 820 913 | housing<br>upper part | | 1 | |
| 4 | 477 820 903 | evaporator | | 1 | |
| 5 | 477 820 905 | blower | | 1 | |
| 6 | 477 820 449 | clamp | | 25 | |
| 7 | 477 820 907 | air cleaner | | 1 | |
| 8 | 477 820 459 | pressure line | | 1 | |
| 9 | 477 820 909 | expansion valve | | 1 | |
| 10 | 477 820 911 | set of o-rings<br>for<br>expansion valve | | 1 | |
| 11 | 477 820 915 | resistor | | 1 | |
| 12 | E 477 820 917 | retaining bow | | 1 | |
| 13 | 477 820 447 A | rubber boot | | 1 | |
| 14 | 477 820 901 | temperature sensor | | 1 | |
| 15 | E 477 820 919 | clamp | | 1 | |
| 16 | E 477 820 437 | tapping screw | | 2 | |
| 17 | E 477 820 435 A | tapping screw | | 2 | |
| 18 | 477 820 507 A | insulator | | 1 | |
| - | 477 820 523 | water drain hose | | 1 | |
| | | - -- E N D -- - | | | |

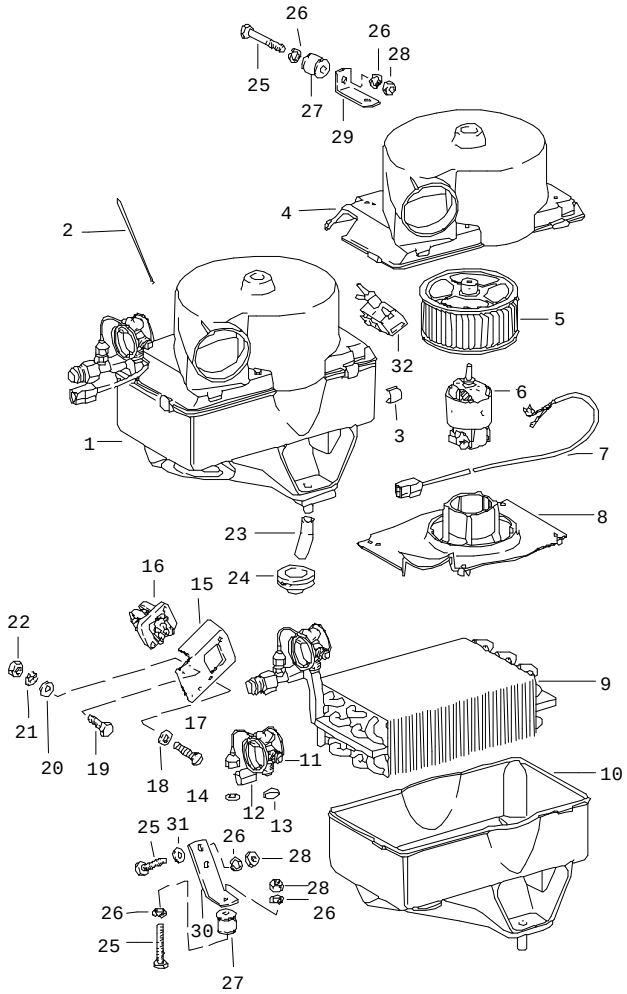


| Pos | Part Number | Name | Remarks | Qty | Model |
|---|---|---|---|---|---|
| | | air conditioner<br>right-hand drive | | | +M 573 |
| 1 | E 478 820 017 A | evaporator<br>with housing | | 1 | |
| 2 | 901 573 903 00 | guide tube<br>temperature switch | | 1 | |
| 3 | 901 573 904 00 | tensioning spring | | 4 | |
| 4 | 911 573 023 00 | housing cover | | 1 | |
| 5 | 901 573 906 00 | fan | | 1 | |
| 6 | 901 624 901 00 | electric motor | | 1 | |
| 7 | E 901 612 084 00 | wiring harness | | 1 | |
| 8 | 911 573 323 00 | engine support | | 1 | |
| 9 | 901 573 907 00 | evaporator | | 1 | |
| 10 | 478 898 117 | housing<br>lower part | | 1 | |
| 11 | 901 573 915 00 | expansion valve | | 1 | |
| 12 | 901 573 914 00 | clip | | 1 | |
| 13 | 901 573 147 00 | gasket<br>3/4" | | 1 | |
| 14 | 901 573 916 00 | gasket<br>7/16" | | 1 | |
| 15 | 478 820 209 | bracket | | 1 | |
| 16 | 911 618 151 00 | thermo bi-metal switch | | 1 | |
| 17 | 900 146 011 02 | oval-head screw<br>AM 4 X 10 | | 2 | |
| 18 | N 012 224 3 | spring washer<br>A 4 | | 2 | |
| 19 | N 010 207 6 | hexagon-head bolt<br>M 5 X 12 | | 2 | |
| 20 | 900 025 003 02 | washer<br>A 5,3 | | 2 | |
| 21 | N 012 130 2 | shake-proof washer<br>A 5,3 | | 2 | |

| Model | Year | MG | SG | Illustration | Restrictions | Update | | | |
|---|---|---|---|---|---|---|---|---|---|
| 924 | 85 | 8 | 13 | 813-35 | | 179 | 10:17 | 16.08.2004 | PORSCHE PET PORSCHE |

| Pos | Part Number | Name | Remarks | Qty | Model |
|---|---|---|---|---|---|
| 22 | N 011 005 14 | hexagon nut<br>M 5 | | 2 | |
| 23 | N 020 363 1 | hose<br>70 MM | | 1 | |
| - | N 020 363 1 | hose<br>15 X 2,5 | | * | |
| 23 | - | 70 MM | | 1 | |
| 24 | 901 573 143 00 | rubber sleeve | | 3 | |
| 25 | N 010 210 13 | hexagon-head bolt<br>M 6 X 10 | | 4 | |
| 26 | N 012 006 4 | lock ring<br>B 6 | | 6 | |
| 27 | 999 703 302 00 | silentbloc | | 2 | |
| 28 | 900 076 010 02 | hexagon nut<br>M 6 | | 4 | |
| 29 | 478 820 201 | angle | /R | 1 | |
| 30 | 478 820 207 | angle<br>lower | | 1 | |
| 31 | N 011 524 7 | washer<br>A 6,4 | | 2 | |
| 32 | 928 573 691 02 | solenoid valve<br>F 92CN4 02198>><br>F 93CN1 00306>> | | 1 | |
| | | - -- E N D -- - | | | |

| Pos | Part Number | Name | Remarks | Qty | Model |
|---|---|---|---|---|---|

| Model | Year | MG | SG | Illustration | Restrictions | Update | 10:17 | 16.08.2004 | PORSCHE | PET | PORSCHE |
|---|---|---|---|---|---|---|---|---|---|---|---|
| 924 | 85 | 8 | 13 | 813-40 | | 179 | | | | | |

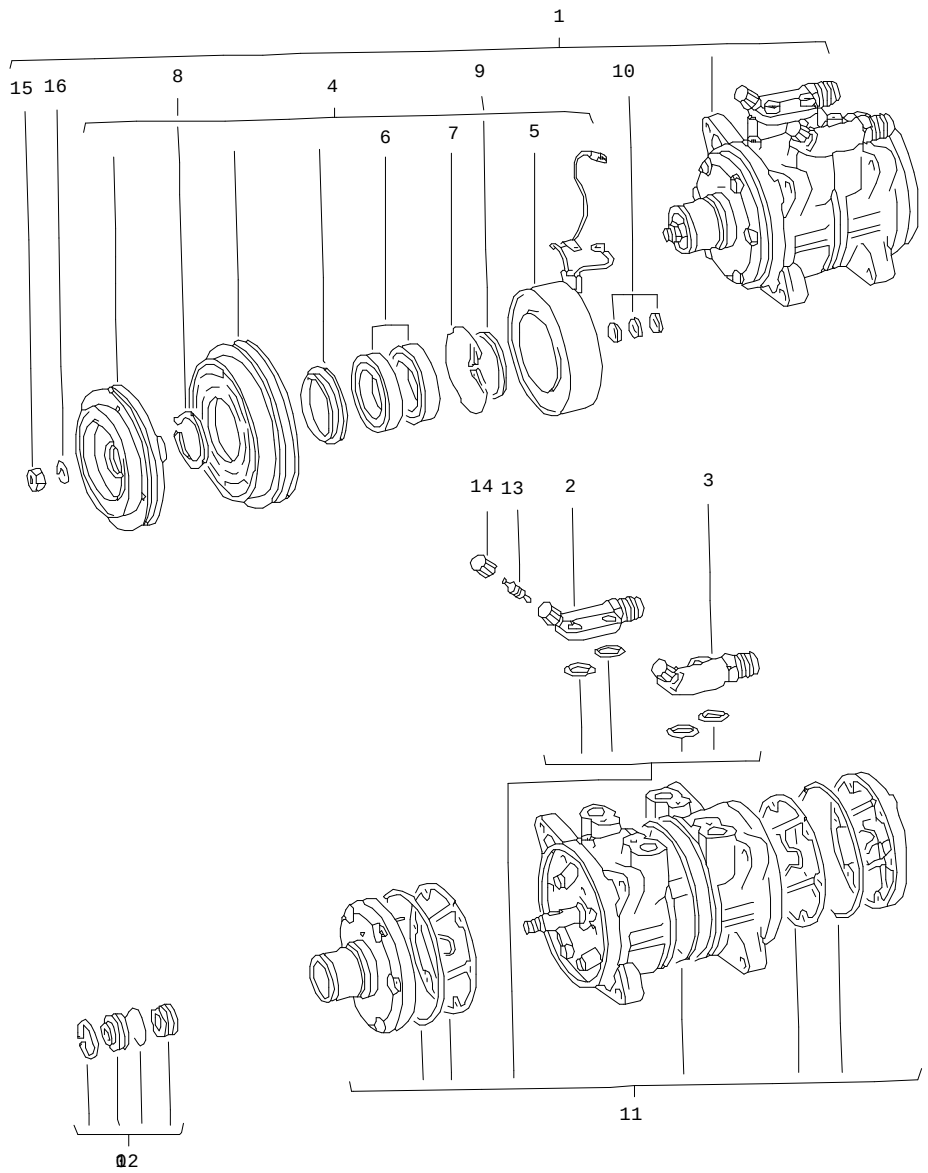


| Pos | Part Number | Name | Remarks | Qty | Model |
|---|---|---|---|---|---|
| | | compressor | | | +M 573 |
| 1 | 047 260 803 | compressor | | 1 | |
| 2 | 477 298 839 | pressure valve | | 1 | |
| 3 | 477 298 837 | suction valve | | 1 | |
| 4 | 477 298 823 | clutch | | 1 | |
| 5 | 477 298 825 | solenoid coil | | 1 | |
| 6 | 477 298 831 | set of bearings | | 1 | |
| 7 | 477 298 827 | retaining spring | | 1 | |
| 8 | 477 298 841 | circlip | | 1 | |
| 9 | 477 298 843 | circlip | | 1 | |
| 10 | 477 298 829 | spacer<br>0,1 MM | | X | |
| (10) | 477 298 829 A | spacer<br>0,2 MM | | X | |
| (10) | 477 298 829 B | spacer<br>0,5 MM | | X | |
| (10) | 477 298 829 C | spacer<br>0,8 MM | | X | |
| (10) | 477 298 829 B | spacer<br>1,0 MM | | X | |
| 11 | E 477 298 833 | set of seals | | 1 | |
| 12 | 477 298 835 | set of seals | | 1 | |
| 13 | 928 573 908 03 | valve insert | | 2 | |
| 14 | 928 573 909 02 | cap | | 2 | |
| 15 | N 011 008 8 | hexagon nut<br>M 8 | | 1 | |
| 16 | 900 027 015 02 | lock ring<br>B 8 | | 1 | |
| | | - -- E N D -- - | | | |

| Model | Year | MG | SG | Illustration | Restrictions | Update | | | | |
|---|---|---|---|---|---|---|---|---|---|---|
| 924 | 85 | 8 | 13 | 813-45 | | 179 | 10:17 | 16.08.2004 | PORSCHE | PET | PORSCHE |

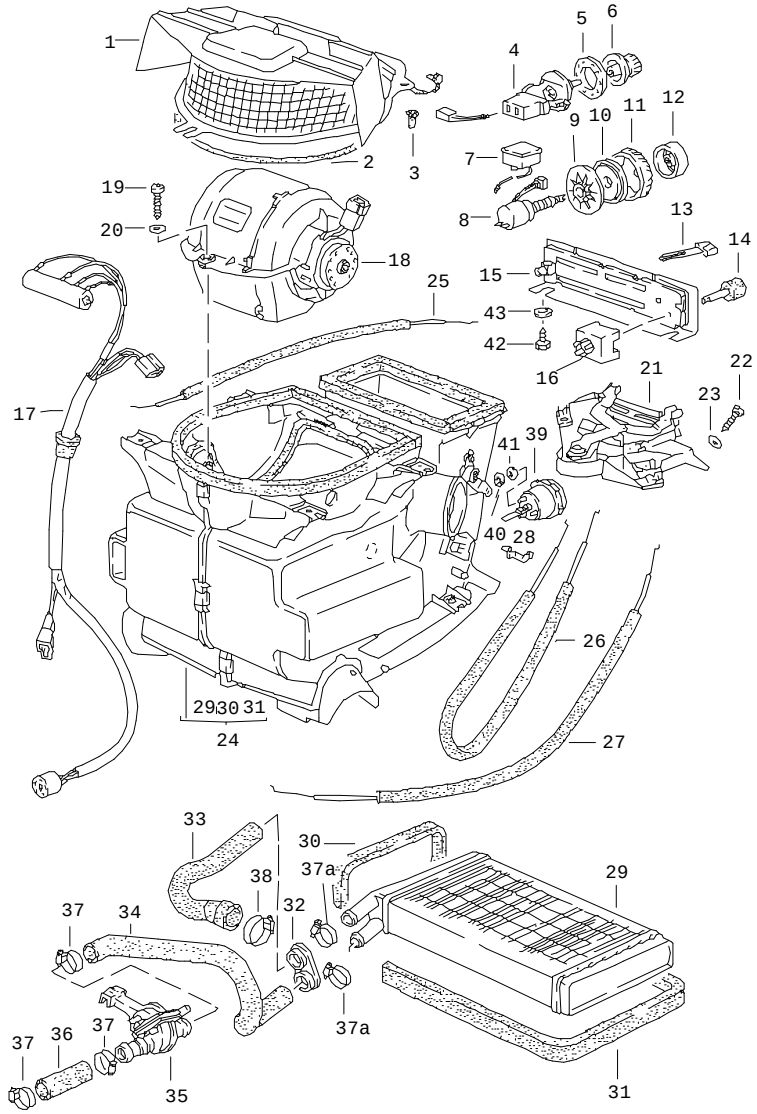


| Pos | Part Number | Name | Remarks | Qty | Model |
|---|---|---|---|---|---|
| | | heater<br>heat exchanger | | | |
| | | F 92CN4 02198>><br>F 93CN1 00306>> | | | 924<br>TURBO |
| 1 | 944 572 145 00 | cover | | 1 | 924 |
| 1 | 944 572 145 00 | cover | /LL | 1 | TURBO |
| (1) | 945 572 145 00 | cover | /RL | 1 | TURBO |
| - | E AMV 152 109 03 | sealing cord<br>9 MM $<br>roller<br>4,5 METER<br>740 MM | | X<br><br><br><br>1 | |
| 3 | 477 819 253 | grommet | | 3 | |
| 4 | 478 959 519 | switch | /RL | 1 | M 573 |
| 5 | 477 959 517 | rose | /RL | 1 | M 573 |
| 6 | 477 959 513 | knob | /RL | 1 | M 573 |
| 7 | 477 959 531 | booster | | 1 | M 573 |
| 8 | 477 959 530 | air-conditioning switch | | 1 | M 573 |
| 9 | 477 959 527 | fastening washer | | 1 | M 573 |
| 10 | 477 959 526 | spacer | | 1 | M 573 |
| 11 | 477 959 528 | adjusting wheel | | 1 | M 573 |
| 12 | 477 959 529 | knob | | 1 | M 573 |
| 13 | 944 572 350 00 | knob | | 3 | |
| 14 | 944 572 349 00 | knob | | 1 | |
| 15 | 477 857 115 | cover | | 1 | |
| 16 | 321 959 511 A | blower switch | | 1 | |
| 17 | 477 971 281 | resistor | | 1 | |
| 18 | 321 820 015 B | blower | | 1 | |
| 19 | 900 143 046 02 | tapping screw<br>B 4,8 X 16 | | 1 | |

| Model | Year | MG | SG | Illustration | Restrictions | Update | 10:17 | 16.08.2004 | PORSCHE PET PORSCHE |
|---|---|---|---|---|---|---|---|---|---|
| 924 | 85 | 8 | 13 | 813-45 | | 179 | | | |

| Pos | Part Number | Name | Remarks | Qty | Model |
|---|---|---|---|---|---|
| 20 | N 011 692 3 | washer<br>B 5,1 | | 1 | |
| 21 | 321 819 045 C | control switch | | 1 | |
| 22 | 900 143 007 02 | tapping screw<br>B 4,2 X 13 | | 2 | |
| 23 | 900 025 002 02 | washer<br>A 4,3 | | 2 | |
| 24 | 944 572 023 00 | flap control box | | 1 | |
| (24) | 944 573 023 00 | flap control box | | 1 | M 573 |
| 25 | 944 572 649 00 | bowden cable | | 1 | |
| 26 | 944 572 648 00 | bowden cable | | 1 | |
| 27 | 944 572 647 00 | bowden cable | | 1 | |
| - | 477 819 343 | spring clamp | | X | |
| 29 | 171 819 031 D | heat exchanger | | 1 | |
| 30 | 321 819 069 B | rubber seal | | 1 | |
| 31 | A 191 819 069 | gasket | | 1 | |
| 31 | 191 819 069 | gasket | | 1 | |
| 32 | 823 819 699 A | drain bush | | 1 | |
| 33 | 477 819 723 A | hose | | 1 | |
| 34 | E 477 819 725 A | hose | | 1 | |
| 35 | E 477 819 081 | valve | | 1 | |
| - | N 020 269 1 | hose<br>16X3,5 | | * | |
| 36 | - | 65 MM | | 1 | |
| 37 | 999 512 346 00 | hose clamp<br>LC 16-25 | | X | |
| 37A | 999 512 346 00 | hose clamp<br>SGT 16-25 | | 2 | |
| 38 | 999 512 272 02 | hose clamp<br>LA 25-40 | | X | |
| 39 | 944 573 053 00 | vacuum unit | | | M 573 |
| 40 | 999 507 243 02 | kronen-fix | | 3 | M 573 |
| 41 | 928 574 465 02 | rubber washer | | 3 | M 573 |
| 42 | 900 187 114 07 | tapping screw<br>B 2,9 X 13 | | 2 | |
| 43 | N 011 662 1 | washer<br>3,2 | | 2 | |

- -- E N D -- -

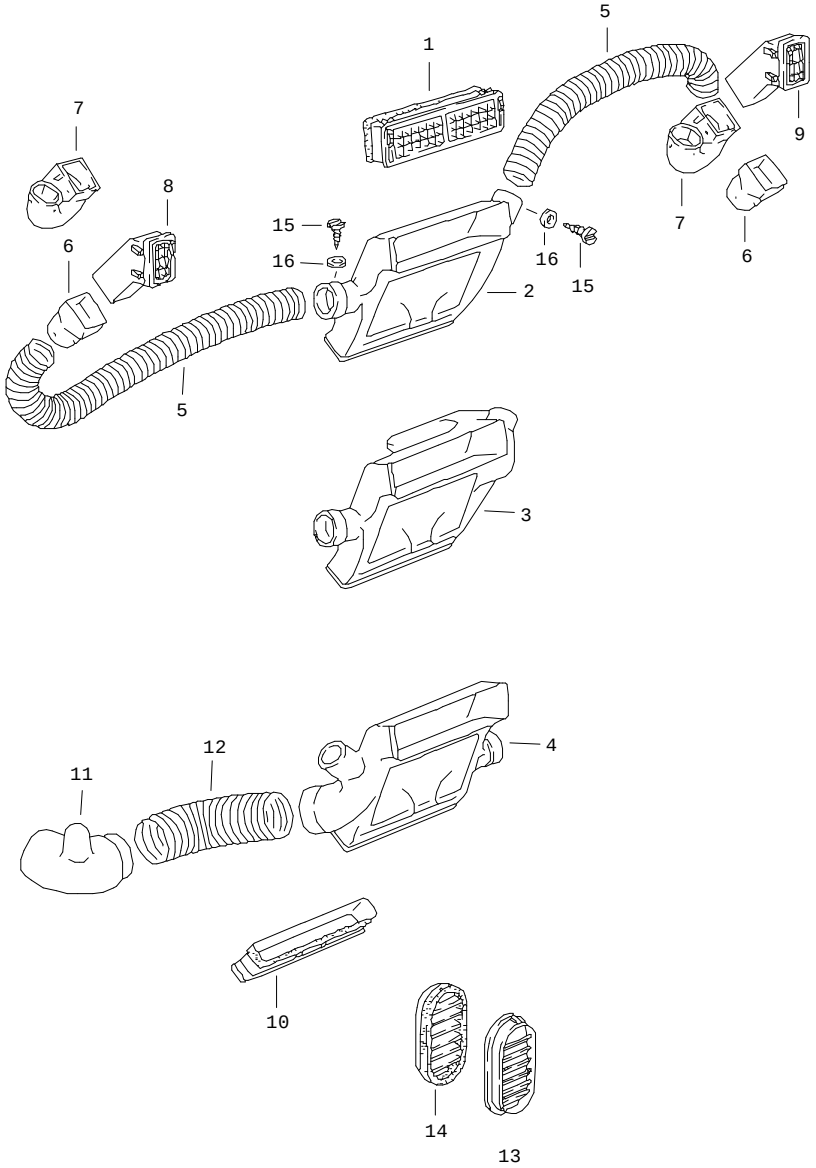


| Pos | Part Number | Name | Remarks | Qty | Model |
|---|---|---|---|---|---|
| | | cover<br>air vent<br>air hose | | | |
| | | F 92CN4 02198>><br>F 93CN1 00306>> | | | 924<br>TURBO |
| 1 | 477 819 173 A | centre nozzle | | 1 | |
| | 01C | black | -82 | | |
| | 89S | brown | -82 | | |
| | 1DB | black | 83- | | |
| | 4RB | brown | 83- | | |
| 2 | 944 572 067 00 | mixing chamber | /LL | 1 | |
| 3 | E 944 573 067 00 | mixing chamber | /LL | 1 | M 573 |
| 4 | 945 572 067 00 | mixing chamber | /RL | 1 | |
| (4) | 945 573 067 00 | mixing chamber | /RL | 1 | M 573 |
| 5 | 477 819 395 | hose | | 2 | |
| 6 | 477 819 717 | connecting piece | /LL/L | 1 | |
| 6 | 477 819 717 | connecting piece | /RL/R | 1 | |
| 7 | 477 820 409 | connecting piece | /LL/R | 1 | |
| 7 | 477 820 409 | connecting piece | /RL/L | 1 | |
| 8 | 477 819 291 | side vent | /L | 1 | |
| | 01C | black | -82 | | |
| | 89S | brown | -82 | | |
| | 1DB | black | 83- | | |
| | 4RB | brown | 83- | | |
| 9 | 477 819 292 | side vent | /R | 1 | |
| | 01C | black | -82 | | |
| | 89S | brown | -82 | | |
| | 1DB | black | 83- | | |
| | 4RB | brown | 83- | | |

| Pos | Part Number | Name | Remarks | Qty | Model |
|---|---|---|---|---|---|
| 10 | E 944 572 065 00 | adapter | | 1 | |
| 11 | 478 820 211 A | intermediate piece | /RL | 1 | M 573 |
| 12 | 478 820 231 | hose | /RL | 1 | M 573 |
| 13 | 477 819 175 | cover<br>for<br>lock pillar | | 2 | |
| 14 | 477 819 179 A | cover<br>for<br>door | /L | 1 | |
| (14) | 477 819 180 | cover<br>for<br>door | /R | 1 | |
| 15 | 900 143 031 02 | oval-head sheetmetal screw<br>B 4,2 X 9,5 | | 4 | |
| 16 | 900 151 028 02 | washer<br>B 4,3 X 12 | | 4 | |
| | | - -- E N D -- - | | | |

| Pos | Part Number | Name | Remarks | Qty | Model |
|---|---|---|---|---|---|

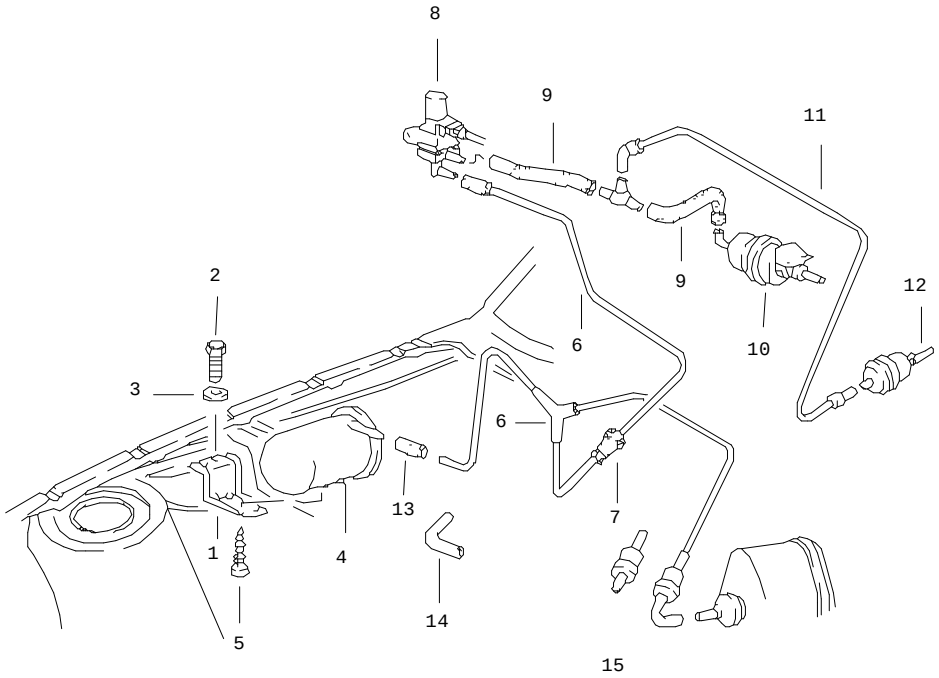


| Pos | Part Number | Name | Remarks | Qty | Model |
|---|---|---|---|---|---|
| | | vacuum line | | | |
| | | F 92CN4 02198>><br>F 93CN1 00306>> | | | 924<br>TURBO |
| 1 | 944 573 465 00 | support | /LL -83 | 1 | 924 |
| (1) | 945 573 465 00 | support | /RL -83 | 1 | |
| (1) | 944 573 465 01 | support | 84- | 1 | |
| 2 | N 010 215 13 | hexagon-head bolt<br>M 6 X 15 | -83 | 2 | |
| 3 | N 011 524 7 | washer<br>A 6,4 | -83 | 2 | |
| - | 900 076 010 02 | hexagon nut<br>M 6 | 84- | 2 | |
| - | N 012 006 4 | lock ring<br>B 6 | 84- | 2 | |
| 4 | 945 573 808 00 | vacuum reservoir | | 1 | |
| 5 | N 090 186 1 | tapping screw<br>B 4,8 X 13 | | 1 | |
| 6 | 944 573 099 00 | vacuum line | /LL | 1 | TURBO |
| 6 | 944 573 099 00 | vacuum line<br>F >>92CN4 06700 | /LL | 1 | 924 |
| 6 | 944 573 099 02 | vacuum line<br>F 92CN4 06701>> | /LL | 1 | 924 |
| (6) | 945 573 099 00 | vacuum line<br>F >>92CN4 06700<br>F >>93CN1 00883 | /RL | 1 | 924<br>TURBO |
| (6) | 945 573 099 01 | vacuum line<br>F 92CN4 06701>><br>F 93CN1 00884>> | /RL -83 | 1 | 924<br>TURBO |
| (6) | 945 573 099 02 | vacuum line | /RL 84- | 1 | |
| 7 | 477 819 849 | grommet | | 1 | |
| 8 | 944 573 165 00 | solenoid valve | /LL | 1 | |
| (8) | 928 573 691 02 | solenoid valve | /RL | 1 | |
| 9 | 477 820 557 | vacuum line | /LL | 1 | |

| Model | Year | MG | SG | Illustration | Restrictions | Update | 10:18 | 16.08.2004 | PORSCHE PET PORSCHE |
|---|---|---|---|---|---|---|---|---|---|
| 924 | 85 | 8 | 13 | 813-55 | | 179 | | | |

| Pos | Part Number | Name | Remarks | Qty | Model | Pos | Part Number | Name | Remarks | Qty | Model |
|---|---|---|---|---|---|---|---|---|---|---|---|
| 10 | 477 820 545 | vacuum unit | /LL | 1 | | | | | | | |
| 11 | 944 573 101 00 | vacuum line | /LL | 1 | | | | | | | |
| 12 | 944 573 053 00 | vacuum unit | | 1 | | | | | | | |
| 13 | 928 574 747 03 | connecting piece | -83 | 1 | | | | | | | |
| 14 | 928 574 717 02 | hose | 84- | 1 | | | | | | | |
| 15 | 928 537 361 02 | valve | | 1 | | | | | | | |
| | | - -- E N D -- - | | | | | | | | | |

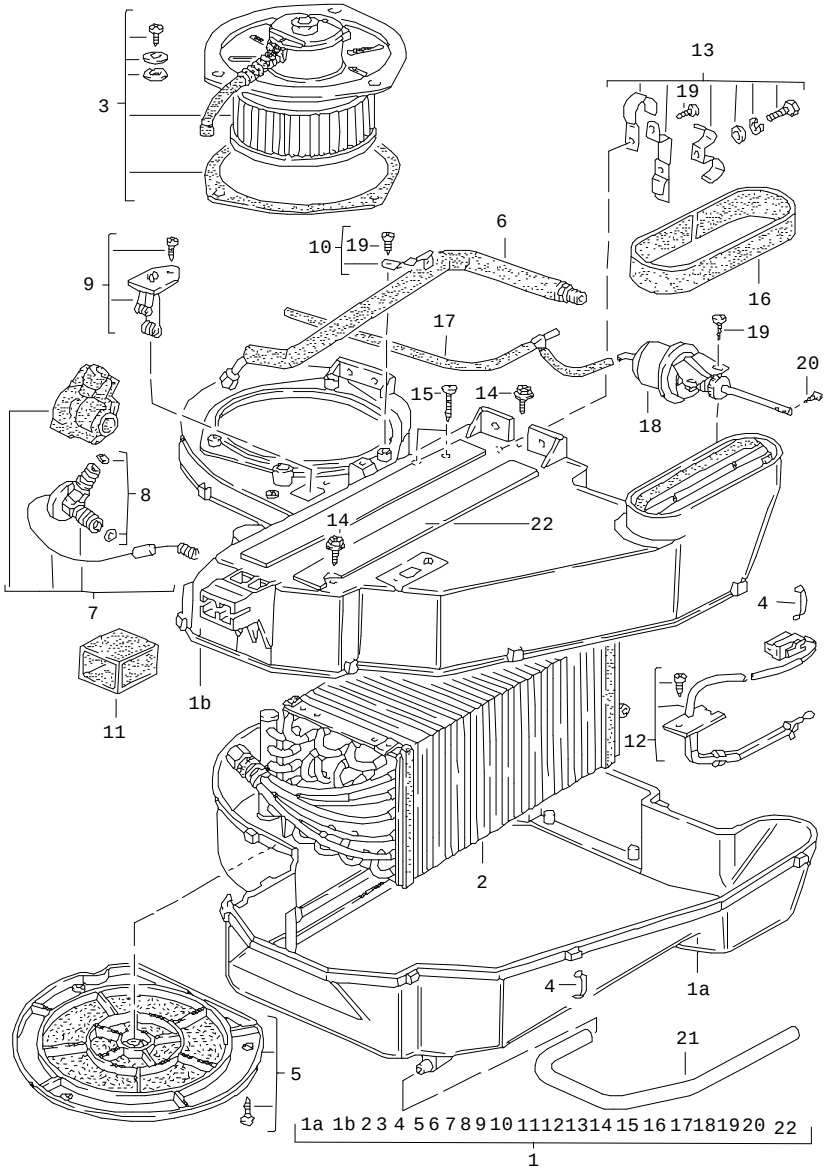


| Pos | Part Number | Name | Remarks | Qty | Model |
|---|---|---|---|---|---|
| | | air conditioner<br>left-hand drive | | | +M573 |
| | | F 92CN4 02198>><br>F 93CN1 00306>> | | | 924<br>TURBO |
| 1 | 477 820 002 A | air conditioner | | 1 | |
| 1A | 477 820 421 A | housing<br>lower part | | 1 | |
| 1B | 477 820 420 A | housing<br>upper part | | 1 | |
| 2 | 477 820 903 | evaporator | | 1 | |
| 3 | 477 820 905 | blower | | 1 | |
| 4 | 477 820 449 | clamp | | 11 | |
| 5 | 477 820 907 | air cleaner | | 1 | |
| 6 | 477 820 459 | pressure line | | 1 | |
| 7 | 477 820 909 | expansion valve | | 1 | |
| 8 | 477 820 911 | set of o-rings | | 1 | |
| 9 | 477 820 915 | resistor | | 1 | |
| 10 | E 477 820 917 | retaining bow | | 1 | |
| 11 | 477 820 447 A | rubber boot | | 1 | |
| 12 | 477 820 901 | temperature sensor | | 1 | |
| 13 | E 477 820 919 | clamp | | 1 | |
| 14 | E 477 820 437 | tapping screw | | 2 | |
| 15 | E 477 820 435 A | tapping screw | | 2 | |
| 16 | 477 820 507 A | insulator | | 1 | |
| 17 | 477 820 557 | vacuum line | | 1 | |
| 18 | 477 820 545 | vacuum unit | | 1 | |
| 19 | E 477 820 435 D | tapping screw | | 2 | |
| 20 | E 477 820 555 | pan-head screw | | 2 | |
| 21 | 477 820 523 | water drain hose | | 1 | |

| Model | Year | MG | SG | Illustration | Restrictions | Update | | | |
|---|---|---|---|---|---|---|---|---|---|
| 924 | 85 | 8 | 13 | 813-60 | | 179 | 10:18 | 16.08.2004 | PORSCHE PET PORSCHE |

| Pos | Part Number | Name | Remarks | Qty | Model | Pos | Part Number | Name | Remarks | Qty | Model |
|---|---|---|---|---|---|---|---|---|---|---|---|
| 22 | 477 820 447 | gasket | | 2 | | | | | | | |
| | | - -- E N D -- - | | | | | | | | | |

| Model | Year | MG | SG | Illustration | Restrictions | Update | | |
|---|---|---|---|---|---|---|---|---|
| 924 | 85 | 8 | 98 | REP | | 179 | 10:54 | 16.08.2004 |

| Pos | Part Number | Name | Remarks | Qty | Model |
|---|---|---|---|---|---|
| | | repair kits | | | |
| >> | > 477 800 377 B | set of locks<br>1 set<br>for<br>door handle<br>steering lock<br>rear lid lock<br>fuel tank cap<br>comprising: | | 1 | |
| | | rear lid lock | | 1 | |
| | | lock cylinder<br>for<br>door handle | | 2 | |
| | | lock cylinder<br>for<br>steering lock | | 1 | |
| | | lock cylinder<br>for<br>fuel tank cap | | 1 | |
| | | key<br>S 91, PROFIL VB | | 2 | |
| | | use also: | | | |
| - | 944 201 061 01 | fuel tank cap | | 1 | |
| >> | > 477 898 011 A | sealing set<br>for<br>windscreen | | 1 | |
| >> | > 477 898 025 | installation set<br>door mirror<br>electrically adjustable<br>heatable<br>plan<br>not for<br>comprising: | /LL/L | 1 | (J) |
| - | 911 731 043 00 | mirror housing | | 1 | |
| - | 928 731 141 06 | mirror base | | 1 | |
| - | 999 143 003 02 | hexagon-head bolt<br>M 5 X 10 | | 3 | |
| - | 911 731 027 02 | frame<br>with<br>transmission | | 1 | |
| - | 911 731 035 08 | mirror glass<br>plan | | 1 | |
| - | 999 703 128 40 | grommet<br>for<br>mirror glass | | 3 | |
| - | 477 831 139 C | reinforcement | | 1 | |
| - | 928 531 235 03 | threaded piece | | 1 | |

| Model | Year | MG | SG | Illustration | Restrictions | Update | | |
|---|---|---|---|---|---|---|---|---|
| 924 | 85 | 8 | 98 | REP | | 179 | 10:54 | 16.08.2004 |

| Pos | Part Number | Name | Remarks | Qty | Model |
|---|---|---|---|---|---|
| - | N 013 295 1 | tensioning sleeve | | 1 | |
| - | 944 731 505 00 | desk pad | | 1 | |
| - | 911 731 257 02 | guide tube | | 1 | |
| - | 911 731 345 02 | adjusting washer<br>lower | | 1 | |
| - | 911 731 347 00 | adjusting washer<br>upper | | 1 | |
| - | 911 731 029 01 | compression spring | | 1 | |
| - | 900 186 042 02 | pan-head screw<br>M 5 X 40 | | 1 | |
| - | E 477 867 181 | mounting piece | | 1 | |
| - | N 014 090 5 | tapping screw<br>3,9 X 13 | | 2 | |
| - | 999 507 071 00 | speed nut | | 2 | |
| - | 911 613 115 00 | switch | | 1 | |
| - | 928 555 463 02 | threaded bush | | 1 | |
| - | 928 613 462 00 | knob | | 1 | |
| - | 477 971 111 | harness<br>door mirror<br>driver's door | | 1 | |
| - | 477 971 115 A | harness<br>door mirror<br>dashboard | | 1 | |
| - | 477 971 910 | bellows | | 1 | |
| - | 803 971 979 | plug socket | | 1 | |
| >> | > 477 898 026 | installation set<br>door mirror<br>electrically adjustable<br>heatable<br>plan<br>comprising: | /LL/R | 1 | |
| - | 911 731 044 00 | mirror housing | | 1 | |
| - | 928 731 143 08 | mirror base | | 1 | |
| - | 999 143 003 02 | hexagon-head bolt<br>M 5 X 10 | | 3 | |
| - | 911 731 028 02 | frame<br>with<br>transmission | | 1 | |

| Model | Year | MG | SG | Illustration | Restrictions | Update | | |
|---|---|---|---|---|---|---|---|---|
| 924 | 85 | 8 | 98 | REP | | 179 | 10:54 | 16.08.2004 |

| Pos | Part Number | Name | Remarks | Qty | Model |
|---|---|---|---|---|---|
| - | 911 731 035 08 | mirror glass<br>plan | | 1 | |
| - | 999 703 128 40 | grommet<br>for<br>mirror glass | | 3 | |
| - | 477 831 140 C | reinforcement | | 1 | |
| - | 928 531 235 03 | threaded piece | | 1 | |
| - | N 013 295 1 | tensioning sleeve | | 1 | |
| - | 944 731 508 00 | desk pad | | 1 | |
| - | 911 731 257 02 | guide tube | | 1 | |
| - | 911 731 345 02 | adjusting washer<br>lower | | 1 | |
| - | 911 731 347 00 | adjusting washer<br>upper | | 1 | |
| - | 911 731 029 01 | compression spring | | 1 | |
| - | 900 186 042 02 | pan-head screw<br>M 5 X 40 | | 1 | |
| - | E 477 867 181 | mounting piece | | 1 | |
| - | N 014 090 5 | tapping screw<br>3,9 X 13 | | 2 | |
| - | 999 507 071 00 | speed nut | | 2 | |
| - | 911 613 115 00 | switch | | 1 | |
| - | 928 555 463 02 | threaded bush | | 1 | |
| - | 928 613 462 00 | knob | | 1 | |
| - | 477 971 113 | harness<br>door mirror<br>passenger's door | | 1 | |
| - | 477 971 115 | harness<br>door mirror<br>dashboard | | 1 | |
| - | 477 971 910 | bellows | | 1 | |
| - | 477 955 703 | rocker switch | | 1 | |
| - | 803 971 979 | plug socket | | 1 | |

| Model | Year | MG | SG | Illustration | Restrictions | Update | | |
|---|---|---|---|---|---|---|---|---|
| 924 | 85 | 8 | 98 | REP | | 179 | 10:54 | 16.08.2004 |

| Pos | Part Number | Name | Remarks | Qty | Model |
|---|---|---|---|---|---|
| >> | > 477 898 033 | air conditioner<br>1 set<br>for subsequent installat.<br>F >>92CN4 02197<br>F >>93CN1 00305<br>F >>93BN7 00450<br>use also: | /LL | 1 | <br><br><br>924<br>TURBO<br>GT |
| - | 047 260 877 E | bracket | | 1 | 924 |
| - | 931 101 014 00 | bracket | | 1 | TURBO,GT |
| - | 477 820 423 | hose | | 1 | 924 |
| - | 477 820 423 A | hose | | 1 | TURBO,GT |
| - | 477 820 425 | hose | | 1 | 924 |
| - | 477 820 425 A | hose | | 1 | TURBO,GT |
| - | 477 863 855 B | insulation<br>firewall<br><br>F >>92BN4 02267<br>F >>93BN1 00360 | | 1 | <br><br><br>924<br>TURBO |
| - | 477 863 855 F | insulation<br>firewall<br><br>F 92BN4 02268>><br>F 93BN1 00361>><br>F 93BN7 00001>> | | 1 | <br><br><br>924<br>TURBO<br>GT |
| - | 477 863 703 L | floor mat | | 1 | 924 |
| | 43S | black | | | |
| | 83S | beige | | | |
| | 87S | brown | | | |
| - | 477 863 703 M | floor mat | | 1 | TURBO,GT |
| | 43S | black | | | |
| | 83S | beige | | | |
| | 87S | brown | | | |
| - | 477 819 151 A | centre nozzle | | 1 | |
| | 01C | black | | | |
| | 89S | brown | | | |
| - | 477 820 412 | knee protection trim | | 1 | |
| | 05T | black | | | |
| | 21S | brown | | | |

| Model | Year | MG | SG | Illustration | Restrictions | Update | | |
|---|---|---|---|---|---|---|---|---|
| 924 | 85 | 8 | 98 | REP | | 179 | 10:54 | 16.08.2004 |

| Pos | Part Number | Name | Remarks | Qty | Model |
|---|---|---|---|---|---|
| - | E 937 501 241 01 | air baffle | | 1 | GT |
| >> | > 477 898 033 A | air conditioner<br>1 set<br>for subsequent installat.<br>F 92CN4 02198>><br>use also: | /LL | 1 | 924 |
| - | 944 573 099 00 | vacuum line<br>F >>92CN4 06700 | | 1 | |
| - | 944 573 099 02 | vacuum line<br>F 92CN4 06701>> | | 1 | |
| - | 477 820 412 | knee protection trim | | 1 | |
| | 05T | black | -82 | | |
| | 21S | brown | -82 | | |
| | 1DB | black | 83- | | |
| | 4RB | brown | 83- | | |
| | | set<br>without<br>electric line<br>when required order also: | | | |
| - | 477 971 071 KC | wiring harness<br>pour engine compartment | | 1 | |
| - | 477 971 196 CB | harness<br>centre console | | 1 | |
| - | 944 615 113 01 | relay | | 2 | |
| - | 141 951 253 B | relay | | 1 | |
| - | 477 971 561 B | harness | | 1 | |
| - | 171 959 141 | relay | | 1 | |
| >> | > 944 501 941 00 | repair kit<br>blind rivet<br>comprising:<br>blind rivet<br>blind rivet<br>blind rivet<br>assembly sleeve | | 1<br><br><br>10<br>5<br>5<br>1 | |
| >> | > 477 853 995 | set of moldings<br>moulding<br>comprising: | | 1 | |
| - | 477 853 981 | moulding<br>285 MM | /V/L | 1 | |
| - | 477 853 982 | moulding<br>285 MM | /V/R | 1 | |

| Model | Year | MG | SG | Illustration | Restrictions | Update | | |
|---|---|---|---|---|---|---|---|---|
| 924 | 85 | 8 | 98 | REP | | 179 | 10:54 | 16.08.2004 |

| Pos | Part Number | Name | Remarks | Qty | Model |
|---|---|---|---|---|---|
| - | 477 853 983 | moulding 395 MM | /V/L | 1 | |
| - | 477 853 984 | moulding 395 MM | /V/R | 1 | |
| - | 477 853 985 | moulding 1123 MM door | /L | 1 | |
| - | 477 853 986 | moulding 1123 MM door | /R | 1 | |
| - | 477 853 987 | moulding 285 MM | /H/L | 1 | |
| - | 477 853 988 | moulding 285 MM | /H/R | 1 | |
| - | 477 853 989 | moulding 440 MM | /H/L | 1 | |
| - | 477 853 990 | moulding 440 MM | /H/R | 1 | |
| | | - -- E N D -- - | | | |

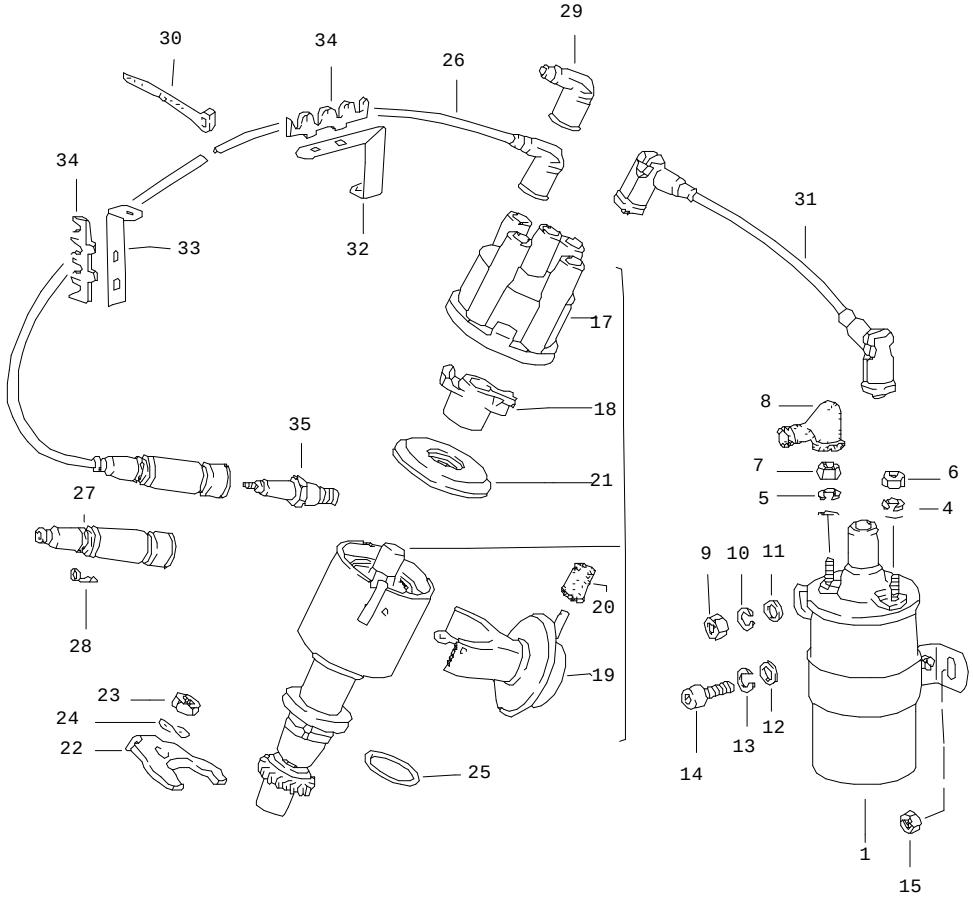


| Pos | Part Number | Name | Remarks | Qty | Model |
|---|---|---|---|---|---|
| | | engine electr. equipment 1 | | | |
| 1 | 046 905 105 | ignition coil | -80 | 1 | |
| 1 | 046 905 105 | ignition coil | 81- | 1 | 924 |
| (1) | 211 905 115 B | ignition coil | 81- | 1 | TURBO,GT |
| 2 | 900 025 003 02 | washer<br>A 5,3 | | 1 | |
| 3 | N 011 524 7 | washer<br>A 6,4 | | 1 | |
| 4 | N 012 005 3 | lock ring<br>B 5 | | 1 | |
| 5 | N 012 006 4 | lock ring<br>B 6 | | 1 | |
| 6 | N 011 005 14 | hexagon nut<br>M 5 | | 1 | |
| 7 | 900 076 010 02 | hexagon nut<br>M 6 | | 1 | |
| 8 | 311 971 901 | protection cap | | 1 | |
| 9 | 900 076 010 02 | hexagon nut<br>M 6 | -80 | 2 | |
| 10 | N 012 006 4 | lock ring<br>B 6 | -80 | 2 | |
| 11 | 900 151 006 09 | washer<br>B 6,4 | -80 | 2 | |
| 12 | N 011 525 13 | washer<br>A 8,4 | 81- | 1 | |
| 13 | 900 027 015 02 | lock ring<br>B 8 | 81- | 2 | |
| 14 | N 010 239 11 | hexagon-head bolt<br>M 8 X 18 | 81- | 1 | |
| 15 | 900 076 025 02 | hexagon nut<br>M 8 | 81- | 1 | |
| (16) | 477 905 206 X | distributor | | 1 | 924 |
| (16) | E 931 602 030 00 | distributor | -80 | 1 | TURBO |
| (16) | 931 602 141 X | distributor | 81- | 1 | TURBO,GT |

| Pos | Part Number | Name | Remarks | Qty | Model |
|---|---|---|---|---|---|
| 17 | 113 905 207 C | distributor cap | | 1 | |
| 18 | 055 905 225 B | rotor | | 1 | 924 |
| (18) | E 931 602 904 00 | rotor | -80 | 1 | TURBO |
| (18) | 931 602 906 00 | rotor | 81- | 1 | TURBO,GT |
| 19 | 477 905 243 | vacuum unit | | 1 | 924 |
| (19) | 931 602 913 00 | vacuum unit | -80 | 1 | TURBO |
| 20 | 930 110 292 00 | plug | | 1 | 924(AUS) |
| 21 | 039 905 241 | dust cover | | 1 | |
| 22 | E 056 905 251 D | support | | 1 | |
| 23 | N 011 008 8 | hexagon nut<br>M 8 | | 1 | |
| 24 | N 012 241 11 | spring washer<br>B 8 X 15 | | 1 | |
| 25 | * 056 905 261 | gasket | | 1 | |
| 26 | 477 905 441 | ignition lead<br>cylinder 1 | | 1 | 924 |
| 26 | 477 905 442 | ignition lead<br>cylinder 2 | | 1 | 924 |
| 26 | 477 905 443 | ignition lead<br>cyl. 3 | | 1 | 924 |
| 26 | 477 905 444 | ignition lead<br>cyl. 4 | | 1 | 924 |
| 26 | 931 609 105 01 | ignition lead<br>cylinder 1 | | 1 | TURBO |
| 26 | 931 609 105 02 | ignition lead<br>cylinder 2 | | 1 | TURBO |
| 26 | 931 609 105 03 | ignition lead<br>cyl. 3 | -80 | 1 | TURBO |
| 26 | 931 609 105 06 | ignition lead<br>cyl. 3 | 81- | 1 | |
| 26 | 931 609 105 04 | ignition lead<br>cyl. 4 | | 1 | TURBO |
| 26 | E 937 609 105 01 | ignition lead<br>cylinder 1 | | 1 | GT |
| 26 | 937 609 105 02 | ignition lead<br>cylinder 2 | | 1 | GT |
| 26 | 937 609 105 03 | ignition lead<br>cyl. 3 | | 1 | GT |
| 26 | 937 609 105 04 | ignition lead<br>cyl. 4 | | 1 | GT |
| (27) | 477 905 447 | spark plug suppressor cap | | 4 | |
| 28 | 036 905 423 | ignition cable socket | | 4 | TURBO,GT |
| (28) | 911 609 310 00 | cable screw | | 4 | 924 |
| 29 | 036 035 281 | suppressor cap | | 4 | |
| 30 | N 020 902 1 | tie-wrap<br>6,5 X 210 | | 2 | |
| 31 | N 038 889 1 | ignition lead<br>ignition coil<br>distributor | | 1 | |
| 32 | 047 905 477 | support<br>ignition lead | | 1 | 924 |
| (32) | 931 609 313 00 | support<br>ignition lead | -80 | 1 | TURBO |
| (32) | 931 609 313 00 | support<br>ignition lead | | 1 | TURBO,GT |
| 33 | 046 905 477 | support<br>ignition lead | | 1 | 924 |
| (33) | 047 133 688 | support<br>ignition lead | | 1 | TURBO,GT |
| 34 | 052 905 471 B | cable holder<br>ignition lead | | 2 | |
| 35 | 999 170 165 90 | spark plug<br>W 5 DC | | 4 | 924 |
| (35) | 999 170 140 90 | spark plug<br>W 4CS | | 4 | GT,TURBO |
| (35) | 999 170 128 90 | spark plug<br>W 3 DPO | | 4 | TURBO |

| Pos | Part Number | Name | Remarks | Qty | Model | Pos | Part Number | Name | Remarks | Qty | Model |
|---|---|---|---|---|---|---|---|---|---|---|---|
| | | - -- E N D -- - | | | | | | | | | |

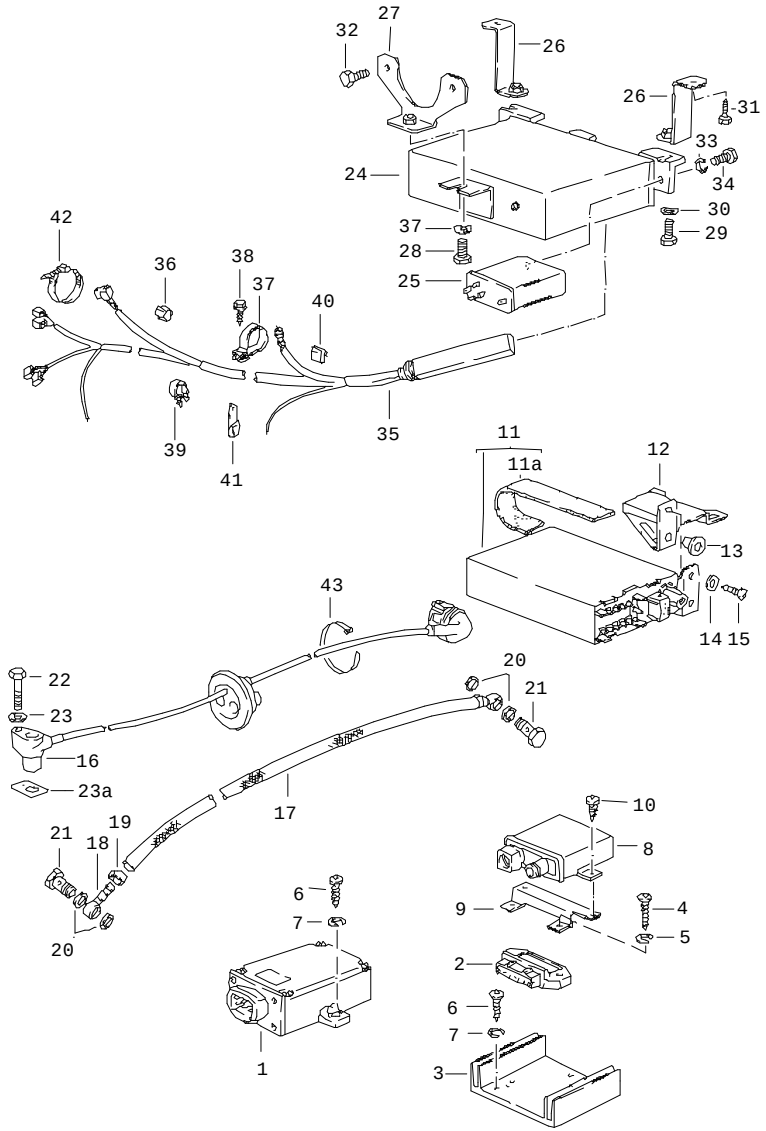


| Pos | Part Number | Name | Remarks | Qty | Model |
|---|---|---|---|---|---|
| | | electr. equipment-engine 2 | | | |
| 1 | 046 905 351 | switch unit | | 1 | 924 |
| (1) | 477 905 351 B | switch unit | -80 | 1 | TURBO |
| 2 | 191 905 351 A | ignition switch unit | 81- | 1 | TURBO,GT |
| 3 | 211 905 357 | heat dissipator | 81- | 1 | TURBO,GT |
| 4 | N 014 125 1 | oval-head screw<br>M 4 X 18 | | 2 | |
| 5 | N 012 224 3 | spring washer<br>B 4 | | 2 | |
| 6 | 900 143 046 02 | tapping screw<br>BZ 4,8 X 16 | | 3 | |
| 7 | N 012 225 2 | spring washer<br>B 5 | | 3 | |
| 11 | 931 602 071 X | ignition control unit | 81- | 1 | TURBO |
| (11) | 931 602 071 01 | ignition control unit | 81- | 1 | TURBO<br>(F),(GB),(B)<br>(GR),(L),(I)<br>(E),(P) |
| (11) | 931 602 075 01 | ignition control unit | 81- | 1 | TURBO<br>(S),(AUS)<br>(HK),(NZ) |
| (11) | 937 602 071 00 | ignition control unit | | 1 | GT |
| 11A | 931 602 171 00 | plastic foam strip | 81- | 1 | TURBO,GT |
| 12 | E 477 857 069 A | support | 81- | 1 | TURBO,GT |
| 13 | 999 507 040 40 | expander nut | | 2 | |
| 14 | N 012 222 4 | spring washer<br>A 5 | | 2 | |
| 15 | N 013 964 4 | tapping screw<br>B 4,2 X 16 | | 2 | |
| 16 | E 931 606 021 00 | pulse sender | 81- | 1 | TURBO,GT |
| - | 999 181 715 40 | vacuum hose<br>4 X 10 | | * | |
| 17 | - | 700 MM | 81- | 1 | TURBO,GT |

| Pos | Part Number | Name | Remarks | Qty | Model | Pos | Part Number | Name | Remarks | Qty | Model |
|---|---|---|---|---|---|---|---|---|---|---|---|
| 18 | 999 230 113 02 | nipple | 81- | 2 | TURBO,GT | | | | | | |
| 19 | N 900 060 01 | hose clamp<br>10,5 | 81- | 2 | TURBO,GT | | | | | | |
| 20 | N 013 830 7 | sealing ring<br>A 8 X 12 | 81- | 4 | TURBO,GT | | | | | | |
| 21 | N 021 055 2 | banjo bolt | 81- | 2 | TURBO,GT | | | | | | |
| 22 | 900 075 017 02 | hexagon-head bolt<br>M 6 X 25 | | 1 | | | | | | | |
| 23 | N 011 524 7 | washer<br>A 6,4 | | 1 | | | | | | | |
| 23A | 931 606 213 00 | shim | | X | TURBO,GT | | | | | | |
| 43 | N 020 904 4 | tie-wrap | | 1 | | | | | | | |
| | | - -- E N D -- - | | | | | | | | | |

| Model | Year | MG | SG | Illustration | Restrictions | Update | | | | |
|---|---|---|---|---|---|---|---|---|---|---|
| 924 | 85 | 9 | 02 | 902-00 | | 179 | 10:19 | 16.08.2004 | PORSCHE | PET | PORSCHE |

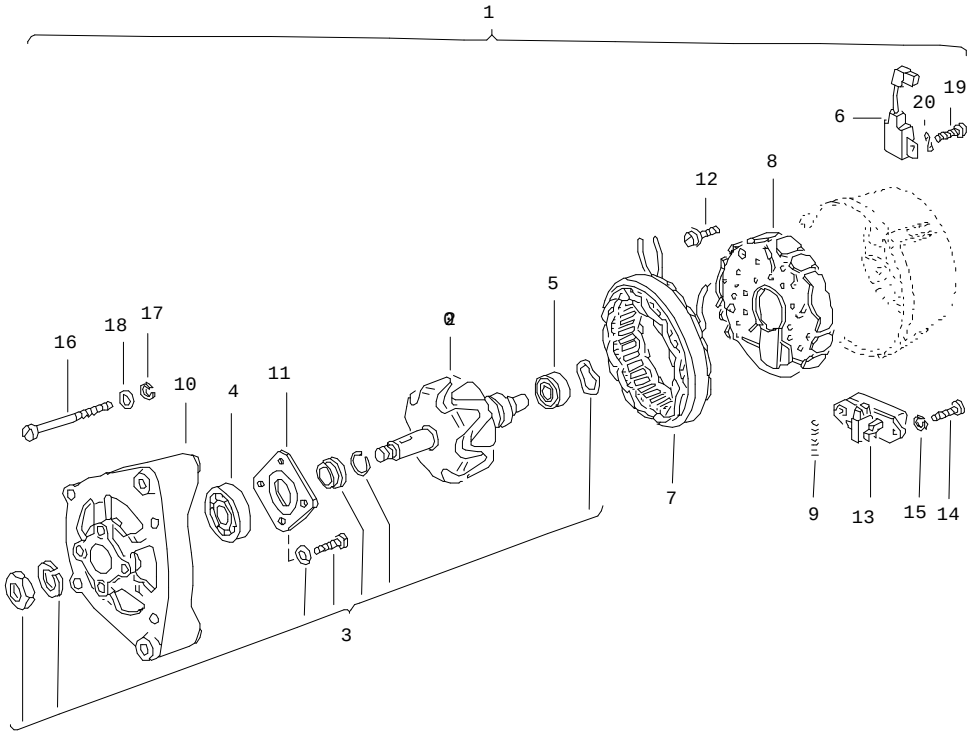


| Pos | Part Number | Name | Remarks | Qty | Model |
|---|---|---|---|---|---|
| | | generator | | | |
| (1) | > 068 903 017 D | generator<br>75 A | | 1 | |
| 2 | E 063 903 213 | claw-pole rotor | | 1 | |
| 3 | 028 903 320 B | parts kit | | 1 | |
| 4 | E 021 903 221 B | deep-groove ball bearing | | 1 | |
| 5 | E 021 903 221 C | deep-groove ball bearing | | 1 | |
| 6 | 063 903 291 | condenser | | 1 | |
| 8 | 063 903 359 | diode plate | | 1 | |
| 9 | 059 903 519 | compression spring | | 2 | |
| 10 | 063 903 537 | end plate | | 1 | |
| 11 | E 021 903 543 A | retainer plate | | 1 | |
| 12 | E 063 903 555 | screw<br>with<br>spring washer | | 3 | |
| 13 | 070 903 803 A | regulator switch | -81 | 1 | |
| (13) | 928 603 142 00 | regulator | 82- | 1 | |
| 14 | N 014 125 1 | oval-head screw<br>AM 4 X 18 | | 2 | |
| 15 | N 012 004 2 | lock ring<br>B 4 | | 2 | |
| 16 | N 010 842 1 | pan-head screw<br>M 5 X 58 | | 4 | |
| 17 | N 012 005 3 | lock ring<br>B 5 | | 4 | |
| 18 | 900 025 003 02 | washer<br>A 5,3 | | 4 | |
| 19 | N 010 710 8 | pan-head screw<br>AM 6 X 10 | | 1 | |
| 20 | N 012 226 5 | spring washer<br>A 6 | | 1 | |

| Pos | Part Number | Name | Remarks | Qty | Model | Pos | Part Number | Name | Remarks | Qty | Model |
|---|---|---|---|---|---|---|---|---|---|---|---|
| - | E 063 903 791 | parts kit<br>B +<br>terminal clamp<br><br>- -- E N D -- - | | 1 | | | | | | | |

| Model | Year | MG | SG | Illustration | Restrictions | Update | | | | |
|---|---|---|---|---|---|---|---|---|---|---|
| 924 | 85 | 9 | 02 | 902-05 | | 179 | 10:19 | 16.08.2004 | PORSCHE | PET | PORSCHE |

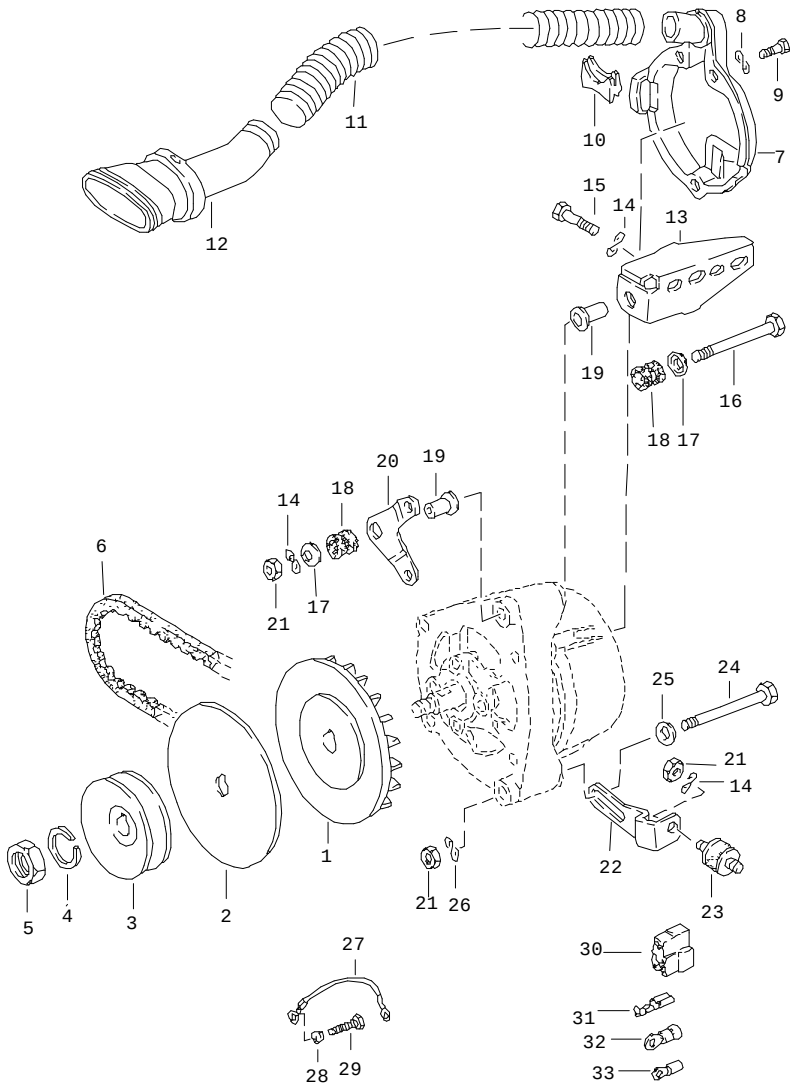


| Pos | Part Number | Name | Remarks | Qty | Model |
|---|---|---|---|---|---|
| | | mounting parts<br>generator | | | 924 |
| 1 | 063 903 171 | fan | | 1 | |
| 2 | 047 903 129 | damping washer | | 1 | |
| 3 | 046 903 119 | v-belt pulley<br>$ 66 | -80 | 1 | |
| 3 | 035 903 119 C | pulley<br>$ 61 | 81- | 1 | |
| 4 | N 012 016 1 | lock ring<br>A 14 | | 1 | |
| 5 | 900 078 005 01 | hexagon nut<br>M 14 X 1,5 | | 1 | |
| (6) | E 047 903 137 A | v-belt<br>for<br>pulley<br>66 $ | -80 | 1 | |
| 6 | 999 192 200 50 | v-belt<br>for<br>pulley<br>61 $ | 81- | 1 | |
| 7 | 046 903 187 A | protection cap | | 1 | |
| 8 | N 012 226 5 | spring washer<br>B 6 | | 3 | |
| 9 | 999 072 005 09 | hexagon-head bolt<br>M 6 X 12 | | 3 | |
| 10 | 046 903 201 A | intermediate piece | | 1 | |
| 11 | 477 819 395 | hose | | 1 | |
| - | N 024 090 1 | hose clamp | | 1 | |
| 12 | 047 903 199 | connection piece | | 1 | |
| 13 | 046 903 143 A | support | /LL | 1 | |
| (13) | 047 903 143 | support | /RL | 1 | |
| 14 | N 012 241 11 | spring washer<br>B 8 | | 4 | |
| 15 | N 010 239 11 | hexagon-head bolt<br>M 8 X 18 | | 4 | |

| Pos | Part Number | Name | Remarks | Qty | Model |
|---|---|---|---|---|---|
| 16 | N 010 391 4 | hexagon-head bolt<br>BM 8 X 95 | /LL | 1 | |
| (16) | N 044 731 1 | pan-head screw<br>M 8 X 105 | /RL | 1 | |
| 17 | 059 903 265 A | concave washer | | 2 | |
| 18 | 059 903 263 A | bush | /LL | 2 | |
| (18) | 047 131 117 A | rubber mounting | /RL | 2 | |
| (18) | 047 903 149 A | rubber mounting | /RL | 1 | |
| 19 | 059 903 127 A | sleeve | /LL | 1 | |
| (19) | 047 131 123 | sleeve | /RL | 1 | |
| 20 | 046 903 145 A | support | /LL | 1 | |
| (20) | E 047 903 141 | support | /RL | 1 | |
| 21 | N 011 008 8 | hexagon nut<br>M 8 | | 3 | |
| 22 | 046 903 255 A | clamp | /LL | 1 | |
| (22) | 046 903 255 B | clamp | /RL | 1 | |
| 23 | 047 903 149 | rubber mounting | | 1 | |
| 24 | N 010 370 5 | hexagon-head bolt<br>M 8 X 70 | | 1 | |
| 25 | 823 711 815 | washer<br>A 8 | | 1 | |
| 26 | N 012 229 3 | spring washer<br>A 8 | | 1 | |
| 27 | 059 971 233 C | ground strap | | 1 | |
| 28 | N 012 226 5 | spring washer<br>B 6 | | 1 | |
| 29 | N 010 210 13 | hexagon-head bolt<br>M 6 X 10 | | 1 | |
| 30 | 821 971 970 | terminal sleeve housing | | 1 | |
| 31 | 111 971 959 | flat receptacle<br>6,3 X 3 | | X | |
| 32 | 111 971 947 B | cable shoe<br>A 5 X 6 | | X | |
| 33 | 111 971 949 B | cable shoe<br>A 5 X 2,5 | | X | |
| | | - -- E N D -- - | | | |

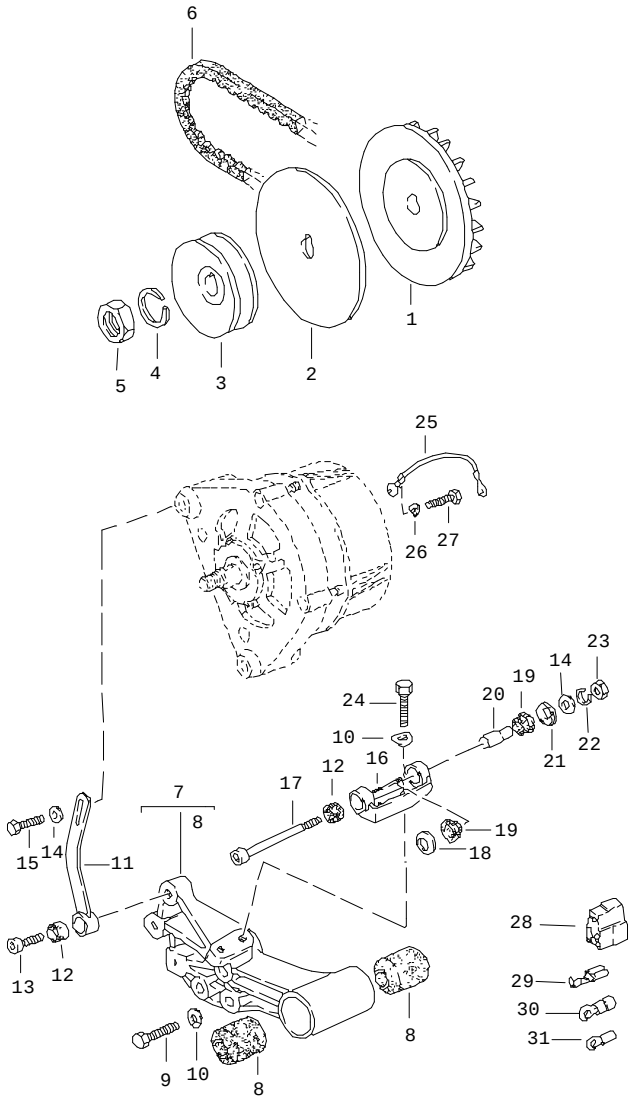


| Pos | Part Number | Name | Remarks | Qty | Model |
|---|---|---|---|---|---|
| | | mounting parts<br>generator | | | TURBO,GT |
| 1 | 063 903 171 | fan | | 1 | |
| 2 | 047 903 129 | damping washer | | 1 | |
| 3 | 035 903 119 C | pulley<br>$ 61 | | 1 | |
| 4 | N 012 016 1 | lock ring<br>A 14 | | 1 | |
| 5 | 900 078 005 01 | hexagon nut<br>M 14 X 1,5 | | 1 | |
| (6) | 999 192 154 50 | v-belt | -80 | 1 | |
| 6 | 999 192 177 50 | v-belt | 81- | 1 | |
| 7 | 931 101 014 00 | bracket | | 1 | |
| 8 | 047 260 905 C | rubber mounting | | 2 | |
| 9 | E 900 074 065 02 | hexagon-head bolt<br>M 10 X 70 | | 1 | |
| (9) | 900 074 063 02 | hexagon-head bolt<br>M 10 X 55 | | 2 | |
| 10 | 900 028 032 02 | spring washer<br>B 10 | | 5 | |
| 11 | 931 603 115 00 | clamp | | 1 | |
| 12 | 931 603 117 00 | rubber mounting | | 2 | |
| 13 | 900 119 004 02 | pan-head screw<br>M 8 X 30 | | 1 | |
| 14 | 928 111 181 00 | washer | | 2 | |
| 15 | 900 075 083 02 | hexagon-head bolt<br>M 8 X 25 | | 1 | |
| 16 | 931 603 113 00 | holder | | 1 | |
| 17 | N 044 774 1 | pan-head screw<br>M 8 X 140 | | 1 | |
| 18 | 931 603 129 00 | concave washer | | 1 | |
| 19 | 931 603 119 01 | rubber mounting | | 2 | |

| Pos | Part Number | Name | Remarks | Qty | Model | Pos | Part Number | Name | Remarks | Qty | Model |
|---|---|---|---|---|---|---|---|---|---|---|---|
| 20 | 931 603 125 00 | sleeve | | 1 | | | | | | | |
| 21 | 931 603 129 01 | concave washer | | 1 | | | | | | | |
| 22 | 900 142 002 01 | lock ring | | 1 | | | | | | | |
| 23 | 900 076 025 02 | hexagon nut<br>M 8 | | 1 | | | | | | | |
| 24 | 900 075 111 08 | hexagon-head bolt<br>M 10 X 30 | | 2 | | | | | | | |
| 25 | 059 971 233 C | ground strap | | 1 | | | | | | | |
| 26 | N 012 226 5 | spring washer<br>B 6 | | 1 | | | | | | | |
| 27 | N 010 210 13 | hexagon-head bolt<br>M 6 X 10 | | 1 | | | | | | | |
| 28 | 821 971 970 | terminal sleeve housing | | 1 | | | | | | | |
| 29 | 111 971 959 | flat receptacle<br>6,3 X 3 | | X | | | | | | | |
| 30 | 111 971 947 B | cable shoe<br>A 5 X 6 | | X | | | | | | | |
| 31 | 111 971 949 B | cable shoe<br>A 5 X 2,5 | | X | | | | | | | |
| | | - -- E N D -- - | | | | | | | | | |

| Model | Year | MG | SG | Illustration | Restrictions | Update | | | | |
|---|---|---|---|---|---|---|---|---|---|---|
| 924 | 85 | 9 | 02 | 902-10 | | 179 | 10:19 | 16.08.2004 | PORSCHE | PET | PORSCHE |

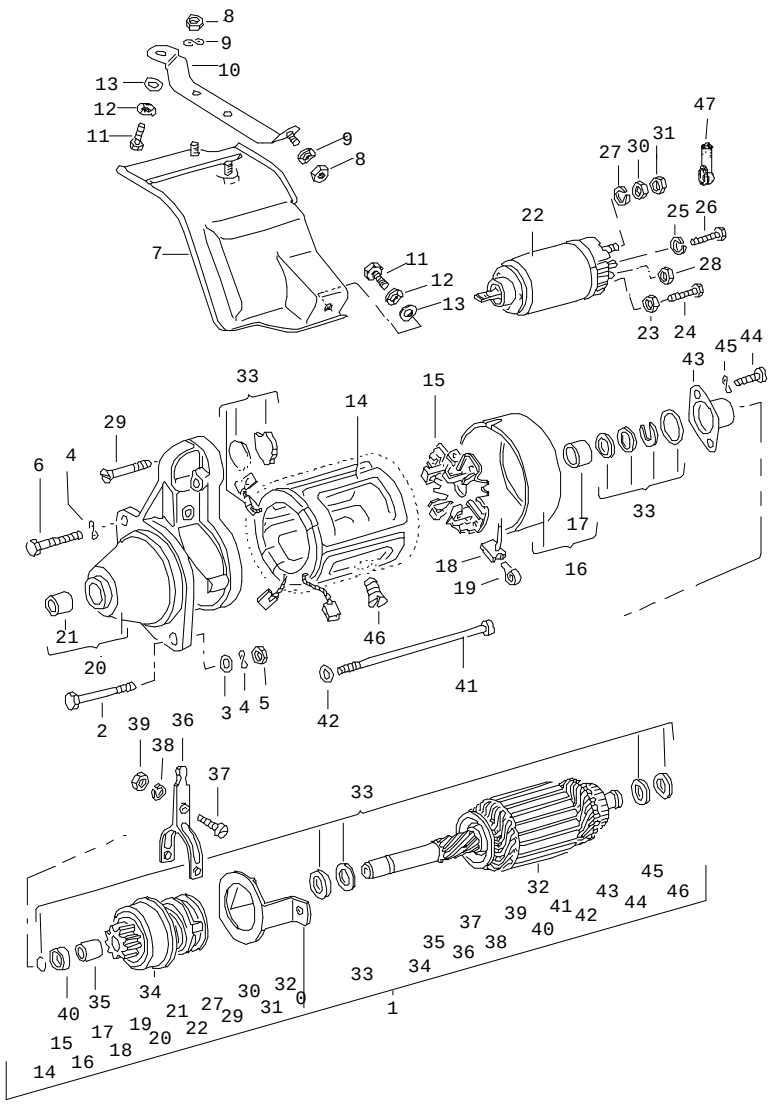

| Pos | Part Number | Name | Remarks | Qty | Model |
|---|---|---|---|---|---|
| | | starter | | | |
| 1 | > 059 911 023 F | starter<br>0,6 KW | | 1 | 924 |
| 1 | > 035 911 023 N | starter<br>1,1 KW | | 1 | 924,AUT. |
| (1) | > 951 604 101 00 | starter<br>1,1 KW | | 1 | TURBO,GT |
| 2 | N 010 488 1 | hexagon-head bolt<br>M 12 X 85 | | 1 | 924 |
| 2 | 059 911 249 B | screw | | 1 | 924 |
| (2) | N 010 491 1 | hexagon-head bolt<br>M 12 X 50 | | 1 | TURBO,GT |
| 3 | N 011 531 7 | washer<br>A 13 | | 1 | |
| 4 | N 012 232 5 | spring washer<br>B 12 | | 2 | |
| 5 | N 011 030 4 | hexagon nut<br>M 12 | | 1 | |
| 6 | N 010 476 3 | screw<br>M 12 X 75 | | 1 | 924 |
| (6) | N 040 253 1 | hexagon-head bolt<br>M 12 X 35 | | 1 | TURBO,GT |
| 7 | 047 911 045 | cover | | 1 | 924 |
| 8 | 900 076 010 02 | hexagon nut<br>M 6 | | 3 | 924 |
| 9 | N 012 226 5 | spring washer<br>B 6 | | 3 | 924 |
| 10 | 047 911 061 | support | | 1 | 924 |
| 11 | 900 075 078 02 | hexagon-head bolt<br>M 8 X 15 | | 2 | 924 |
| 12 | N 012 241 11 | spring washer<br>B 8 | | 2 | 924 |
| 13 | N 011 525 13 | washer<br>A 8,4 | | 2 | 924 |
| 14 | E 059 911 115 B | field coil | | 1 | 924 |

| Pos | Part Number | Name | Remarks | Qty | Model |
|---|---|---|---|---|---|
| 15 | E 311 911 209 A | retainer plate | | 1 | 924 |
| 16 | E 056 911 211 | commutator bracket | | 1 | 924 |
| 17 | E 111 911 213 A | bearing sleeve | | 1 | 924 |
| 18 | E 311 911 215 A | set | | 1 | 924 |
| 19 | E 059 911 219 A | compression spring | | 1 | 924 |
| 20 | E 059 911 255 B | bearing | | 1 | 924 |
| 21 | 014 301 155 | bearing sleeve | | 1 | 924 |
| 22 | 059 911 287 B | solenoid switch | | 1 | 924 |
| 23 | N 011 005 14 | hexagon nut<br>M 5 | | 1 | TURBO,GT |
| 24 | N 010 201 2 | hexagon-head bolt<br>M 4 X 8 | | 1 | 924 |
| 25 | N 012 005 3 | lock ring<br>B 5 | | 1 | 924 |
| (25) | N 012 004 2 | lock ring<br>B 4 | | 1 | TURBO,GT |
| 26 | N 010 225 4 | hexagon-head bolt<br>M 5 X 8 | | 1 | 924 |
| 27 | 900 027 015 02 | lock ring<br>B 8 | | 3 | 924 |
| 28 | N 011 008 8 | hexagon nut<br>M 8 | | 1 | 924 |
| 29 | E 052 911 299 | screw | | 3 | 924 |
| 30 | N 011 118 14 | hexagon nut<br>BM 8 | | 1 | 924 |
| 31 | N 011 008 8 | hexagon nut<br>M 8 | | 1 | 924 |
| 32 | E 059 911 311 B | armature | | 1 | 924 |
| 33 | E 028 911 320 | parts kit | | 1 | 924 |
| 34 | E 059 911 335 | pinion drive | | 1 | 924 |
| 35 | E 059 911 339 | shift bush | | 1 | 924 |
| 36 | E 311 911 365 | gearshift lever | | 1 | 924 |
| 37 | E 311 911 383 | screw | | 1 | 924 |
| 38 | N 012 006 4 | lock ring<br>B 6 | | 1 | 924 |
| 39 | N 011 116 5 | hexagon nut<br>BM 6 | | 1 | 924 |
| 40 | E 028 911 479 | stop ring | | 1 | 924 |
| 41 | E 059 911 491 A | screw | | 1 | 924 |
| 42 | E 059 911 493 A | washer | | 2 | 924 |
| 43 | E 113 911 495 | cap | | 1 | 924 |
| 44 | 900 014 067 02 | pan-head screw<br>M 4 X 8 | | 2 | 924 |
| 45 | E N 012 224 1 | spring washer<br>B 4 | | 2 | 924 |
| 46 | E N 010 999 1 | countersunk-head screw<br>M 10 X 13,5 | | 4 | 924 |
| 47 | 999 659 006 50 | protection cap | | 1 | TURBO,GT |

- -- E N D -- -

| Model | Year | MG | SG | Illustration | Restrictions | Update | | | | |
|---|---|---|---|---|---|---|---|---|---|---|
| 924 | 85 | 9 | 02 | 902-15 | | 179 | 10:20 | 16.08.2004 | PORSCHE | PET | PORSCHE |

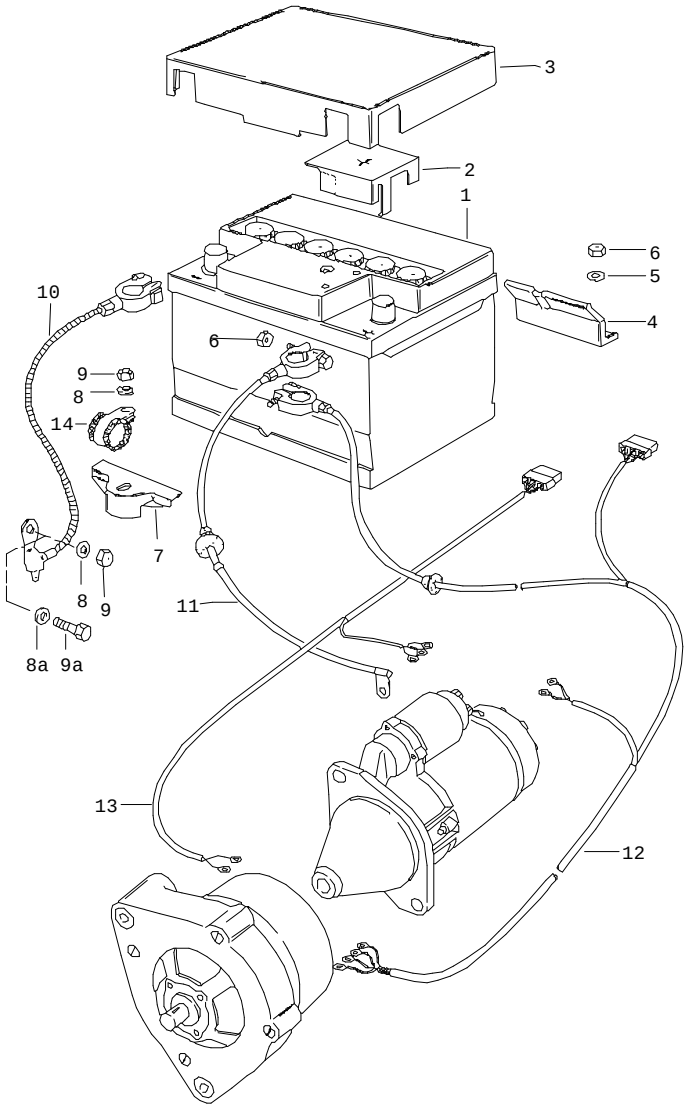


| Pos | Part Number | Name | Remarks | Qty | Model |
|---|---|---|---|---|---|
| | | battery harnesses | | | |
| 1 | 999 611 053 20 | battery 50 AH | /LL | 1 | |
| (1) | 477 915 105 | battery 45 AH | /RL | 1 | |
| (1) | 477 915 107 A | battery 63 AH | /LL | 1 | |
| 2 | 477 915 429 | pole covering | /RL | 1 | |
| 3 | 281 915 411 F | battery cover | | 1 | |
| (3) | 477 915 411 A | battery cover for battery 63 AH | | 1 | |
| 4 | 477 915 315 | clip | | 1 | |
| 5 | 900 151 029 02 | washer B 6,4 | | 2 | |
| 6 | 900 076 010 02 | hexagon nut M 6 | | 3 | |
| 7 | 914 611 233 10 | tension terminal | | 1 | |
| 8 | 311 827 181 | washer | -81 | 2 | |
| 8A | N 012 008 5 | washer | 82- | 1 | |
| 9 | N 011 008 8 | hexagon nut M 8 | -81 | 2 | |
| 9A | N 010 239 11 | hexagon-head bolt M 8 X 18 | 82- | 1 | |
| 10 | 477 971 221 | ground strap | | 1 | 924 |
| 11 | 477 971 225 B | line battery starter | /LL -81 | 1 | 924 |
| (11) | 477 971 224 A | line battery starter | /LL 82- | 1 | 924 |
| (11) | 478 971 224 | battery-starter cable battery starter | /RL | 1 | 924 |

| Pos | Part Number | Name | Remarks | Qty | Model | Pos | Part Number | Name | Remarks | Qty | Model |
|---|---|---|---|---|---|---|---|---|---|---|---|
| 12 | E 477 971 223 | harness<br>battery<br>starter<br>generator | /LL -80 | 1 | TURBO | | | | | | |
| (12) | 477 971 223 A | line<br>battery<br>starter<br>generator | /LL 81 | 1 | TURBO,GT | | | | | | |
| (12) | E 477 971 223 B | line<br>battery<br>starter<br>generator | /LL 82- | 1 | TURBO, | | | | | | |
| (12) | 478 971 223 | line<br>battery<br>starter<br>generator | /RL -80 | 1 | TURBO | | | | | | |
| (12) | 478 971 223 A | line<br>battery<br>starter<br>generator | /RL 81- | 1 | TURBO,GT | | | | | | |
| (13) | E 047 971 224 A | battery-starter cable<br>battery<br>starter | /LL | 1 | 924 | | | | | | |
| (13) | 478 971 226 | harness<br>battery<br>starter | /RL | 1 | 924 | | | | | | |
| 14 | E 999 511 137 02 | clip | 82- | 1 | | | | | | | |
| | | - -- E N D -- - | | | | | | | | | |

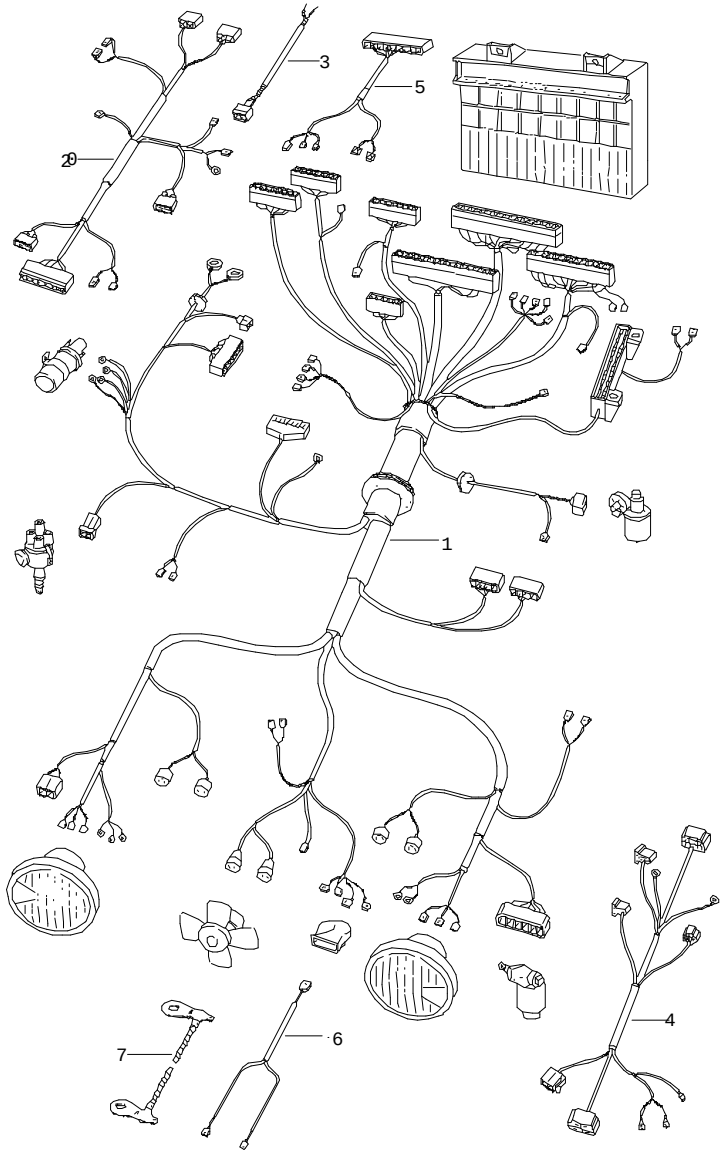


| Pos | Part Number | Name | Remarks | Qty | Model |
|---|---|---|---|---|---|
| | | harnesses<br>engine compartment | | | |
| (1) | 477 971 071 DC | wiring harness<br>engine compartment | /LL 80 | 1 | 924 |
| 1 | E 477 971 071 KA | wiring harness<br>engine compartment | /LL 80 | 1 | 924,M 573 |
| 1 | 477 971 071 GA | wiring harness<br>engine compartment | /LL 80 | 1 | TURBO |
| 1 | 477 971 071 NA | wiring harness<br>engine compartment | /LL 80 | 1 | TURBO,M 573 |
| 1 | E 478 971 071 AB | wiring harness<br>engine compartment | /RL 80 | 1 | 924 |
| 1 | 478 971 071 CA | wiring harness<br>engine compartment | /RL 80 | 1 | 924,M 573 |
| 1 | E 478 971 071 BA | wiring harness<br>engine compartment | /RL 80 | 1 | TURBO |
| 1 | E 478 971 071 DA | wiring harness<br>engine compartment | /RL 80 | 1 | TURBO,M 573 |
| | | F 92BN4 00001>>92CN4 02197<br>F 93BN1 00001>>93CN1 00305 | 81<br>81 | | 924<br>TURBO |
| 1 | 477 971 071 DD | wiring harness<br>engine compartment | /LL | 1 | 924 |
| 1 | 477 971 071 KB | wiring harness<br>engine compartment | /LL | 1 | 924,M 573 |
| 1 | 477 971 071 GB | wiring harness<br>engine compartment | /LL | 1 | TURBO,GT |
| 1 | 477 971 071 NB | wiring harness<br>engine compartment | /LL | 1 | TURBO,GT,<br>M 573 |
| 1 | 478 971 071 AC | wiring harness<br>engine compartment | /RL | 1 | 924 |
| 1 | 478 971 071 CB | wiring harness<br>engine compartment | /RL | 1 | 924,M 573 |
| 1 | 478 971 071 BB | wiring harness<br>engine compartment | /RL | 1 | TURBO,GT |
| 1 | 478 971 071 DB | wiring harness<br>engine compartment | /RL | 1 | TURBO,GT,<br>M 573 |

| Pos | Part Number | Name | Remarks | Qty | Model |
|---|---|---|---|---|---|
| | | F 92CN4 02198>><br>F 93CN1 00306>> | 81-<br>81- | | 924<br>TURBO |
| 1 | 477 971 071 DE | wiring harness<br>engine compartment | /LL -83 | 1 | 924 |
| 1 | 477 971 071 DF | wiring harness<br>engine compartment | /LL 84 | 1 | 924 |
| 1 | 477 971 071 DG | wiring harness<br>engine compartment | /LL 85 | 1 | |
| 1 | 477 971 071 KC | wiring harness<br>engine compartment | /LL -83 | 1 | 924,M 573 |
| 1 | 477 971 071 KE | wiring harness<br>engine compartment | /LL 84 | 1 | 924,M 573 |
| 1 | 477 971 071 KF | wiring harness<br>engine compartment | /LL 85 | 1 | M 573 |
| 1 | 477 971 071 GC | wiring harness<br>engine compartment | /LL | 1 | TURBO |
| 1 | 477 971 071 NC | wiring harness<br>engine compartment | /LL | 1 | TURBO,M 573 |
| 1 | 478 971 071 AD | wiring harness<br>engine compartment | /RL -83 | 1 | 924 |
| 1 | 478 971 071 AE | wiring harness<br>engine compartment | /RL 84 | 1 | 924 |
| 1 | 478 971 071 AF | wiring harness<br>engine compartment | /RL 85 | 1 | |
| 1 | 478 971 071 CC | wiring harness<br>engine compartment | /RL -83 | 1 | 924,M 573 |
| 1 | 478 971 071 CD | wiring harness<br>engine compartment | /RL 84 | 1 | 924,M 573 |
| 1 | 478 971 071 CE | wiring harness<br>engine compartment | /RL 85 | 1 | M 573 |
| 1 | 478 971 071 BC | wiring harness<br>engine compartment | /RL | 1 | TURBO |
| 1 | 478 971 071 DC | wiring harness<br>engine compartment | /RL | 1 | TURBO,M 573 |
| 1 | 477 971 071 LD | wiring harness<br>engine compartment | /LL 84- | 1 | M 215 |

| Pos | Part Number | Name | Remarks | Qty | Model |
|---|---|---|---|---|---|
| (2) | E 477 971 761 BA | wiring harness<br>engine | -80 | 1 | 924 |
| (2) | E 477 971 761 BC | wiring harness<br>engine | 81- | 1 | 924 |
| 2 | 477 971 761 F | wiring harness<br>engine | -80 | 1 | TURBO |
| (2) | 477 971 761 G | wiring harness<br>engine | 81- | 1 | TURBO,GT |
| 3 | 477 971 469 A | harness<br>tsz switch unit | /LL | 1 | |
| (3) | 477 971 469 C | wiring harness<br>tsz switch unit | /RL | 1 | |
| 4 | E 477 971 563 | wiring harness<br>air conditioner<br>F >>92CN4 02197<br>F >>93CN1 00305 | /LL | 1 | M 573<br><br>924<br>TURBO |
| 4 | 477 971 563 A | wiring harness<br>air conditioner<br>F 92CN4 02198>><br>F 93CN1 00306>> | | 1 | M 573<br><br>924<br>TURBO |
| (4) | 478 971 561 A | wiring harness<br>air conditioner | /RL | 1 | M 573 |
| - | E 477 971 973 | wiring harness<br><br>headlight washer system | | 1 | |
| 5 | 477 971 205 | wiring harness | | 1 | |
| 6 | 477 971 322 A | double line | | 1 | |
| (7) | 477 971 235 | ground strap<br>engine<br>body | | 1 | |
| (7) | 477 971 351 | ground strap<br>charge air cooler<br>body | | 1 | GT |

- -- E N D -- -

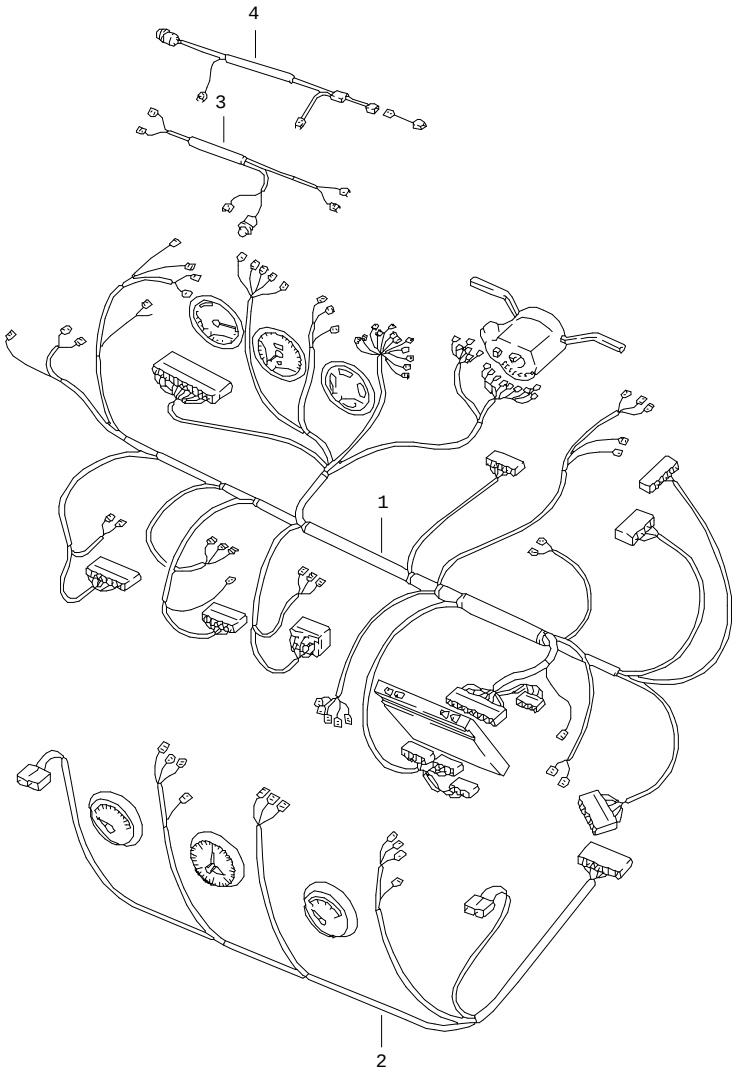


| Pos | Part Number | Name | Remarks | Qty | Model |
|---|---|---|---|---|---|
| | | harnesses<br>dashboard<br>centre console<br>lifting roof | | | |
| 1 | 477 971 050 DC | wiring harness<br>dashboard | /LL 80 | 1 | |
| 1 | 478 971 050 BB | wiring harness<br>dashboard | /RL 80 | 1 | |
| 1 | 477 971 050 FC | wiring harness<br>dashboard | /LL 80 | 1 | 924,AUT |
| 1 | E 478 971 050 CB | wiring harness<br>dashboard | /RL 80 | 1 | 924,AUT |
| | | F 92BN4 00001>>92CN4 02197<br>F 93BN1 00001>>93CN1 00305 | | | 924<br>TURBO |
| 1 | 477 971 050 DD | wiring harness<br>dashboard | /LL | 1 | |
| 1 | 478 971 050 BC | wiring harness<br>dashboard | /RL | 1 | |
| 1 | 477 971 050 FD | wiring harness<br>dashboard | /LL | 1 | 924,AUT. |
| 1 | 478 971 050 CC | wiring harness<br>dashboard | /RL | 1 | 924,AUT. |
| | | F 92CN4 02198>><br>F 93CN1 00306>> | | | 924<br>TURBO |
| 1 | 477 971 050 DF | wiring harness<br>dashboard | /LL -83 | 1 | |
| 1 | 477 971 050 DG | wiring harness<br>dashboard | /LL 84- | 1 | |
| 1 | E 478 971 050 BE | wiring harness<br>dashboard | /RL -83 | 1 | |
| 1 | 478 971 050 BF | wiring harness<br>dashboard | /RL 84- | 1 | |
| 1 | 477 971 050 FF | wiring harness<br>dashboard | /LL | 1 | 924,AUT. |
| 1 | 478 971 050 CE | wiring harness<br>dashboard | /RL -83 | 1 | 924,AUT. |

| Pos | Part Number | Name | Remarks | Qty | Model |
|---|---|---|---|---|---|
| 1 | 478 971 050 CF | wiring harness<br>dashboard | /RL 84- | 1 | M 249 |
| 1 | 477 971 050 EG | wiring harness<br>dashboard | /LL 84- | 1 | M 215 |
| | | F 92BN4 50001>>92CN4 02197 | | | 924(J) |
| | | wiring harness<br>centre console | | | |
| 2 | 477 971 196 D | harness<br>centre console | 80 | 1 | |
| 2 | E 477 971 196 C | wiring harness | 80 | 1 | M 573 |
| | | F 92BN4 00001>>92CN4 02197<br>F 93BN1 00001>>92CN1 00305 | | | 924<br>TURBO |
| 2 | E 477 971 196 DA | wiring harness<br>centre console | | 1 | |
| 2 | E 477 971 196 CA | wiring harness<br>centre console | | 1 | M 573 |
| | | F 92CN4 02198>><br>F 93CN1 00306>> | | | 924<br>TURBO |
| 2 | 477 971 196 DB | wiring harness<br>centre console | | 1 | |
| 2 | 477 971 196 CB | harness<br>centre console | | 1 | M 573 |
| 4 | 478 971 109 B | wiring harness<br>additional headlamp | /RL | 1 | |
| - | 944 612 121 00 | wiring harness<br>lifting roof | 84- | 1 | M 650 |
| | | - -- E N D -- - | | | |

| Pos | Part Number | Name | Remarks | Qty | Model |
|---|---|---|---|---|---|

| Model | Year | MG | SG | Illustration | Restrictions | Update | | | | |
|---|---|---|---|---|---|---|---|---|---|---|
| 924 | 85 | 9 | 02 | 902-30 | | 179 | 10:20 | 16.08.2004 | PORSCHE | PET | PORSCHE |

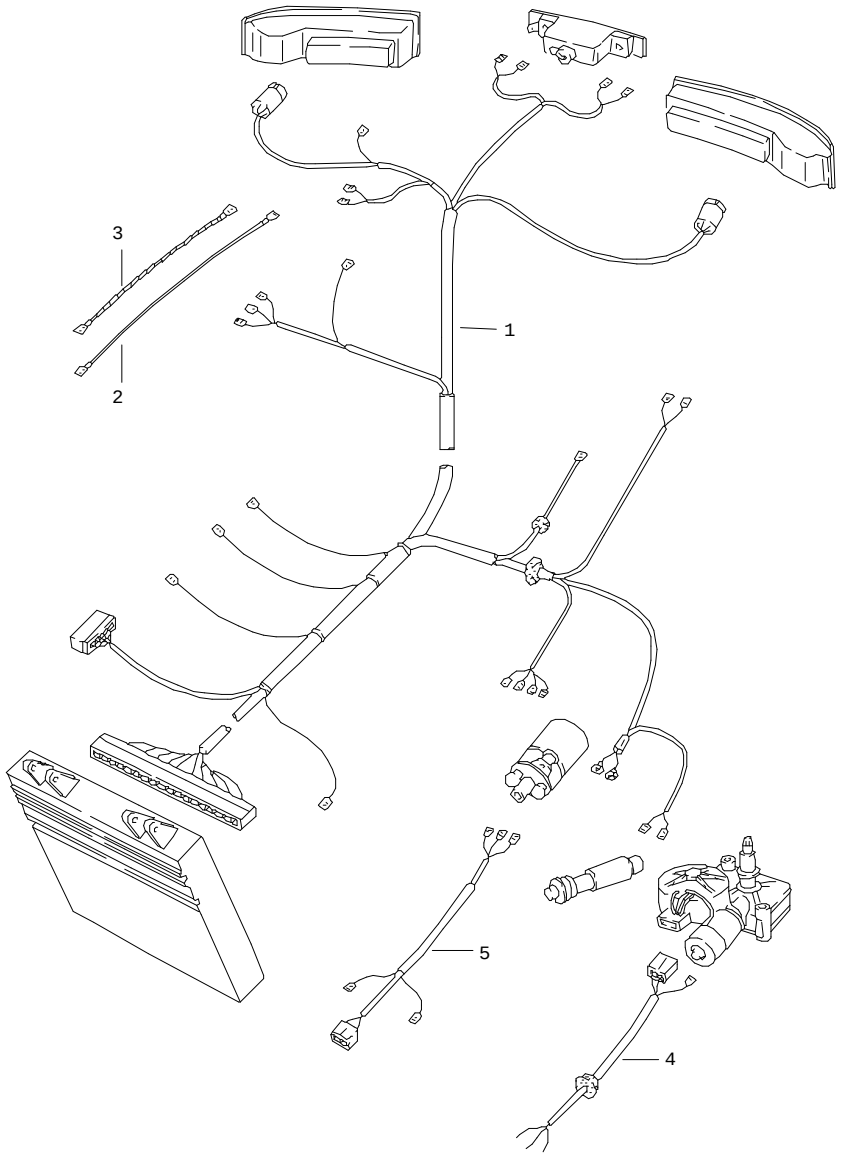


| Pos | Part Number | Name | Remarks | Qty | Model |
|---|---|---|---|---|---|
| | | harnesses<br>rear end | | | |
| 1 | 477 971 011 DB | wiring harness<br>rear end<br>when required order also:<br>171.971.519 A | -83 | 1 | |
| (1) | 477 971 011 DE | wiring harness<br>rear end | 84- | 1 | 924 |
| (1) | 477 971 011 CB | wiring harness<br>rear end<br>when required order also:<br>171.971.519 A | -83 | 1 | 924,AUT. |
| (1) | 477 971 011 CE | wiring harness<br>rear end | 84- | 1 | 924,AUT. |
| 2 | 477 971 257 B | line<br>gas-filled strut<br>rear window | | 2 | |
| 3 | 477 971 263 B | ground strap<br>gas-filled strut | | 2 | |
| 4 | 477 971 345 | harness<br>rear window wiper | -82 | 1 | |
| (4) | 477 971 345 A | harness<br>rear window wiper | 83- | 1 | |
| 5 | 477 971 346 | wiring harness<br>rear window wiper | | 1 | |
| | | - -- E N D -- - | | | |

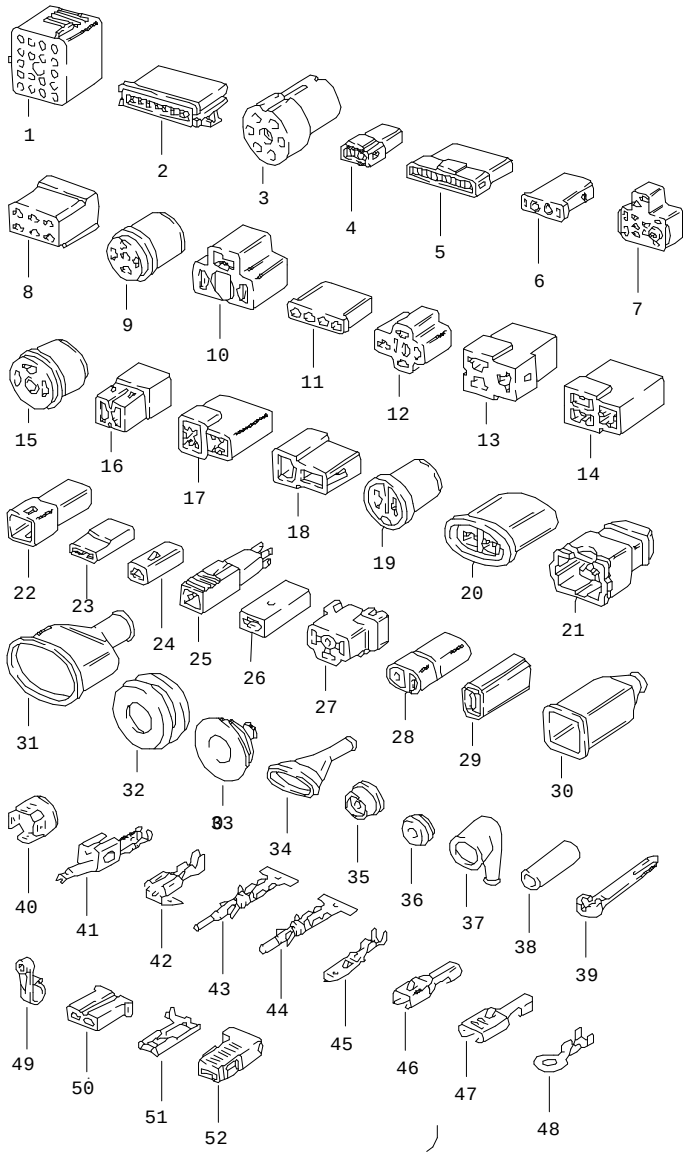

| Pos | Part Number | Name | Remarks | Qty | Model |
|---|---|---|---|---|---|
| | | connector housing | | | |
| 1 | 171 971 971 | connector housing<br>yellow<br>20-pole | | 1 | |
| (1) | 171 971 971 A | connector housing<br>black<br>22-pole | | 1 | |
| (1) | 171 971 971 B | connector housing<br>blue<br>22-pole | | 1 | |
| (1) | 171 971 971 C | connector housing<br>clear<br>19-pole | | 1 | |
| (1) | 171 971 971 D | connector housing<br>red<br>20-pole | | 1 | |
| (1) | 171 971 971 E | connector housing<br>white<br>19-pole | | 1 | |
| 2 | 113 971 998 B | connector housing<br>8-pole | | X | |
| 3 | 803 971 979 | plug socket<br>7-pole | | 1 | |
| (4) | 171 971 998 | connector housing<br>single pole | | X | |
| 4 | 171 971 998 A | connector housing<br>2-pole | | X | |
| (4) | 171 971 998 C | connector housing<br>4-pole | | 1 | |
| 5 | 171 971 998 E | connector housing<br>6-pole | | X | |
| (6) | 171 971 999 | terminal sleeve housing<br>single pole | | X | |
| 6 | 171 971 999 A | terminal sleeve housing<br>2-pole | | X | |
| (6) | 171 971 999 B | terminal sleeve housing<br>3-pole | | X | |

| Pos | Part Number | Name | Remarks | Qty | Model |
|---|---|---|---|---|---|
| (6) | 171 971 999 E | connector housing<br>6-pole | | X | |
| 7 | 477 971 999 | terminal sleeve housing<br>light switch | | 1 | |
| 8 | 803 971 831 | terminal sleeve housing<br>6-pole | | 1 | |
| (8) | 803 971 971 | terminal sleeve housing<br>8-pole | | X | |
| 10 | 914 612 327 10 | terminal sleeve housing<br>3-pole | | X | |
| 12 | 803 971 835 A | terminal sleeve housing<br>3-pole | | 1 | |
| 13 | 821 971 970 | terminal sleeve housing<br>3-pole | | 1 | |
| 14 | 821 971 975 | terminal sleeve housing<br>3-pole | | 1 | |
| 15 | 113 945 525 | terminal sleeve housing<br>3-pole | | 6 | |
| 16 | 815 971 989 | connector housing<br>2-pole | | X | |
| 17 | 815 971 988 A | terminal sleeve housing<br>2-pole | | X | |
| 18 | 815 971 989 A | connector housing<br>2-pole | | X | |
| 19 | 810 971 993 | terminal sleeve housing<br>2-pole | | X | |
| 20 | 810 971 989 | connector housing<br>2-pole | | X | |
| 21 | 022 906 231 A | connector housing<br>2-pole | | X | |
| 22 | 823 971 976 | connector housing<br>single pole | | X | |
| 23 | 825 971 990 | terminal sleeve housing<br>single pole | | X | |
| (23) | 431 971 995 | terminal sleeve housing<br>single pole | | X | |
| 24 | 823 971 990 | terminal sleeve housing<br>single pole | | X | |
| 26 | 111 971 977 | plug with guide | | X | |
| 28 | 914 612 417 10 | fuse holder | | 1 | |
| 29 | 111 971 921 | protection cap<br>for<br>flat connector | | X | |
| (29) | 111 971 921 B | connector housing<br>for<br>flat connector | | X | |
| 30 | 803 957 855 B | protective grommet<br>for<br>connector housing | | 1 | |
| 31 | 431 971 866 | protective grommet<br>for<br>terminal sleeve housing | | 1 | |
| 32 | 477 971 871 B | rubber sleeve<br>harness<br>engine compartment | | X | |
| 33 | 477 971 911 | protective grommet<br>harness<br>starter battery | | 1 | |
| 34 | 022 906 102 | protection cap | | 1 | |
| 35 | 411 941 189 | grommet | | X | |
| 36 | 477 971 909 | rubber sleeve | | X | |
| (36) | 111 941 189 | drain bush | | X | |
| 37 | E 113 927 249 | protection cap | | X | |
| 38 | 059 971 891 | sleeve | | X | |
| 39 | 477 971 850 A | tie-wrap<br>starter cable | | X | |
| (39) | N 020 902 1 | tie-wrap<br>120 X 6,5 | | X | |
| (39) | 999 513 001 40 | tie-wrap<br>140 X 3,6 | | X | |
| (39) | 999 513 049 40 | tie-wrap | 82- | X | |

| Pos | Part Number | Name | Remarks | Qty | Model |
|---|---|---|---|---|---|
| (39) | 999 513 010 40 | tie-wrap | | X | |
| 40 | 171 971 519 A | ground connector | | 1 | |
| 41 | 999 652 275 10 | contact | | X | |
| 42 | N 017 242 1 | flat receptacle with clips 6,3 X 1 | | X | |
| 43 | N 017 589 4 | round connector with clips 1,6 X 1 | | X | |
| (43) | N 017 586 2 | round connector with clips 2,1 X 1 | | X | |
| 44 | N 017 593 4 | cylindrical connector with clips 1,6 X 1 | | X | |
| (44) | N 017 592 2 | cylindrical connector 1,6 X 2,5 | | X | |
| 45 | 111 971 985 | flat plug with clips 6,3 X 1 | | X | |
| (45) | N 017 457 2 | flat plug with clips 2,8 X 1 | | X | |
| (45) | 111 971 986 | flat plug with clips 6,3 X 2,5 | | X | |
| 46 | 111 971 958 | flat receptacle with clips 2,8 X 0,8 | | X | |
| (46) | 111 971 958 | flat receptacle with clips 2,8 X 1 | | X | |
| (46) | 111 971 958 | flat receptacle with clips 2,8 X 1 | | X | |
| (46) | N 017 243 1 | flat receptacle with clips 2,8 X 1,5 | | X | |
| 47 | 111 971 959 | flat receptacle with clips 6,3 X 0,8 | | X | |
| (47) | 111 971 959 | flat receptacle with clips 6,3 X 1 | | X | |
| (47) | 999 652 106 02 | flat receptacle 6,3 X 1,5 | | X | |
| (47) | N 017 491 8 | flat receptacle with clips 6,3 X 2,5 | | X | |
| (47) | N 017 491 8 | flat receptacle with clips 6,3 X 2,5 | | X | |
| 48 | N 017 518 2 | cable shoe 8 X 2,5 | | X | |
| (48) | N 017 516 2 | cable shoe 6 X 1 | | X | |
| (48) | N 017 515 4 | cable shoe 5 X 1 | | X | |
| (48) | N 017 505 4 | cable shoe 5 X 0,5 | | X | |
| 49 | 477 971 853 | cable clip | 82- | X | |
| 50 | 171 906 231 | connector housing 2-pole | | X | |
| 51 | N 017 498 2 | flat receptacle 6,3 X 2,5 | | X | |
| 52 | 211 971 921 | protection cap | | X | |

| Pos | Part Number | Name | Remarks | Qty | Model | Pos | Part Number | Name | Remarks | Qty | Model |
|---|---|---|---|---|---|---|---|---|---|---|---|
| | | - -- E N D -- - | | | | | | | | | |

| Model | Year | MG | SG | Illustration | Restrictions | Update | | | | |
|---|---|---|---|---|---|---|---|---|---|---|
| 924 | 85 | 9 | 03 | 903-00 | | 179 | 10:20 | 16.08.2004 | PORSCHE | PET | PORSCHE |

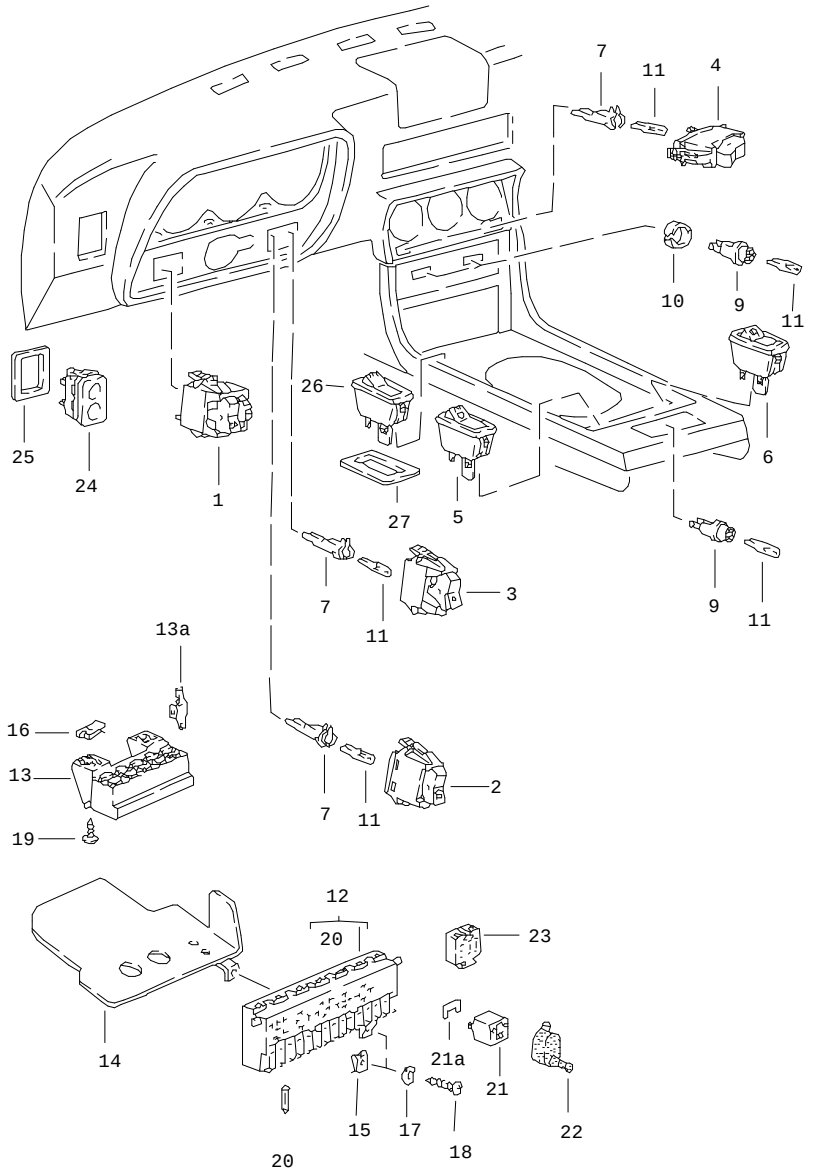


| Pos | Part Number | Name | Remarks | Qty | Model |
|---|---|---|---|---|---|
| | | switch<br>relay plate<br>relay | | | |
| 1 | 477 941 531 B | light switch | -80 | 1 | |
| (1) | 477 941 531 F | light switch | 81- | 1 | |
| 2 | 133 959 621 | switch<br>rear window heating | -80 | 1 | |
| (2) | 477 959 623 | switch<br>rear window heating | 81- | 1 | |
| 3 | 477 953 235 A | emergency light switch | | 1 | |
| 4 | 251 941 535 | switch<br>fog headlamp<br>rear fog light | | 1 | |
| 4 | 477 941 535 | switch<br>fog headlamp | -80 | 1 | |
| (4) | A 944 613 110 00 | switch for rear fog light | 81 | 1 | |
| (4) | 944 613 110 00 | switch for rear fog light<br>use also: | -81 | 1 | |
| - | 944 612 617 00 | terminal sleeve housing | | 1 | |
| 5 | 477 941 563 A | switch<br>additional headlamp | | 1 | |
| (5) | 911 613 113 00 | changeover switch | | X | |
| 6 | 477 955 701 | rocker switch<br>rear window wiper | | 1 | |
| (6) | 477 955 702 | switch<br>headlight washer system | | 1 | |
| (6) | 477 955 703 | mirror changeover switch | | 1 | |
| 7 | E 141 957 397 A | bulb holder | -80 | 2 | |
| 9 | 914 631 179 10 | bulb holder | | 3 | |
| 10 | 477 919 333 | knob holder | | 2 | |
| 11 | 900 631 129 90 | bulb<br>12 V, 1,2 W | | X | |
| 12 | 477 941 813 | relay plate | | 1 | |

| Pos | Part Number | Name | Remarks | Qty | Model |
|---|---|---|---|---|---|
| 13 | 477 937 511 | fuse holder<br>9-pole | | 1 | |
| 13A | 999 652 275 10 | contact | | X | |
| 14 | E 477 941 802 | cover | /LL | 1 | |
| (14) | 478 941 802 | cover | /RL | 1 | |
| 15 | N 015 438 1 | speed nut<br>B 3,5 X 16,5 | | 1 | |
| 16 | E N 045 421 1 | tapping screw<br>B 4,2 | | 2 | |
| 17 | N 011 663 1 | washer<br>B 3,7 | | 1 | |
| 18 | 900 143 072 02 | oval-head sheetmetal screw<br>B 3,5 X 19 | | 1 | |
| 19 | N 013 964 4 | tapping screw<br>B 4,2 X 16 | | 2 | |
| 20 | N 017 121 1 | safety fuse<br>8 A | | X | |
| (20) | N 017 121 4 | safety fuse<br>16 A | | X | |
| (20) | N 017 121 5 | safety fuse<br>25 A | | 1 | |
| 21 | E 411 941 583 B | relay<br>low/high beam | -80 | 1 | |
| 21A | 171 937 545 | bridge | 81- | 1 | |
| (21) | 111 953 227 D | flasher relay | | 1 | |
| (21) | 141 951 253 B | relay<br>rear window heating | | 1 | M 215 |
| (21) | 928 618 102 03 | relay<br>warning time relay | | 1 | M 215 |
| (21) | 141 951 253 B | relay<br>additional headlamp<br>electric fan<br>rear window heating | | 3 | |
| (21) | 141 951 253 B | relay<br>horn<br>F >>92CN4 07364<br>F >>93CN1 00926 | | 1 | 924<br>TURBO |
| (21) | 443 963 141 | relay<br>horn<br>F 92CN4 07365>><br>F 93CN1 00927>> | | 1 | 924<br>TURBO |
| (21) | 477 959 143 | relay<br>air conditioner | | 1 | |
| (21) | 477 955 531 A | interval relay | | 1 | |
| (21) | 433 906 059 | relay<br>fuel pump | | 1 | |
| (21) | 111 943 383 C | relay<br>engine<br>pop-up headlight | | 1 | |
| 22 | 477 971 923 | protection cap<br>relay<br>engine<br>pop-up headlight | | 1 | |
| (21) | 944 615 103 00 | switch unit<br>radio<br>lifting roof | <br>84- | 1<br>1 | <br>M 650 |
| 23 | 135 937 501 A | terminal sleeve housing | | X | |
| 24 | 944 613 129 00 | switch<br>rear lid unlocking device | 84- | 1 | |
| 25 | 477 867 185 A | mounting piece<br>switch | 84- | 1 | |
| 26 | 951 613 123 00 | switch<br>lifting roof | 84- | 1 | |
| 27 | 944 613 124 00 | rose<br>switch | 84- | 1 | |

- -- E N D -- -

| Model | Year | MG | SG | Illustration | Restrictions | Update | 10:20 | 16.08.2004 | PORSCHE | PET | PORSCHE |
|---|---|---|---|---|---|---|---|---|---|---|---|
| 924 | 85 | 9 | 03 | 903-05 | | 179 | | | | | |

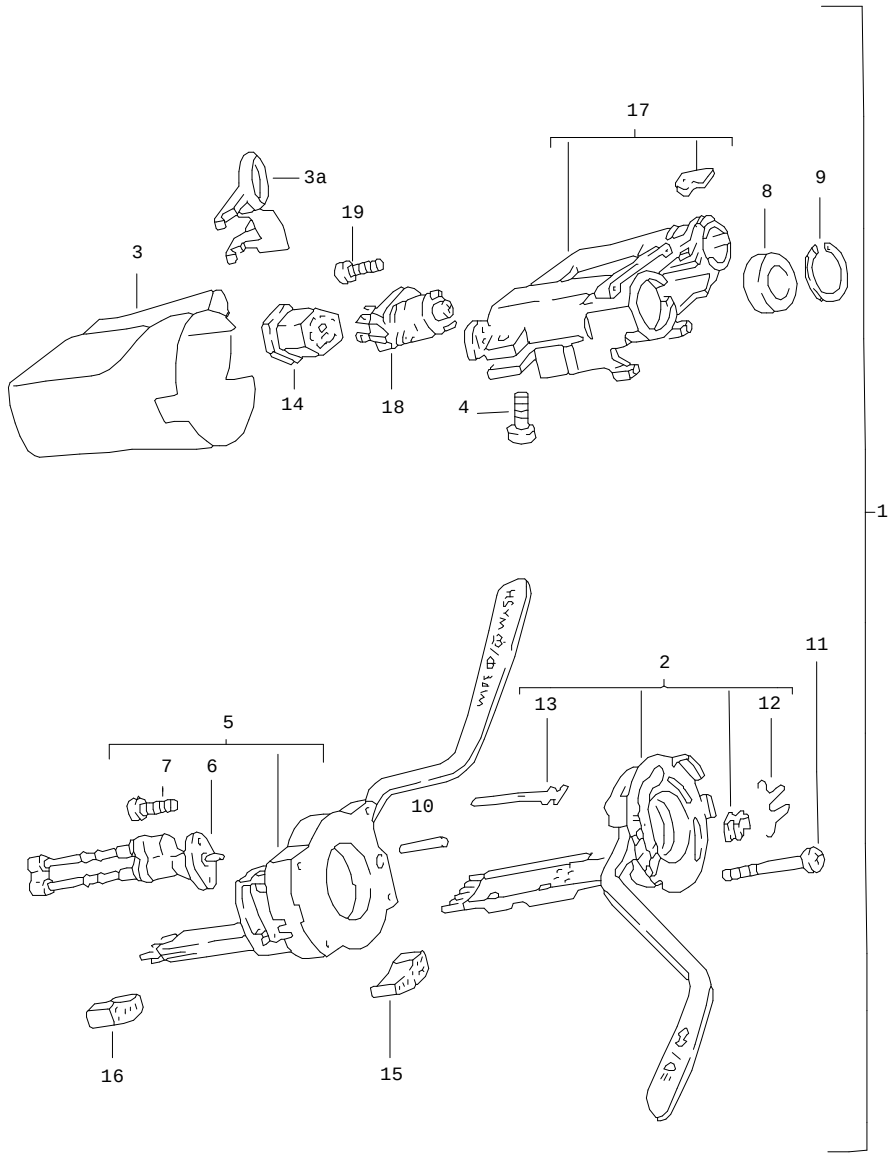


| Pos | Part Number | Name | Remarks | Qty | Model |
|---|---|---|---|---|---|
| | | steering column switch<br>steering lock | -80 | | |
| (1) | E 477 953 503 B | steering column switch<br>with<br>steering lock | | 1 | |
| 2 | 111 953 513 F | direction indicator switch | | 1 | |
| 3 | 113 953 515 | lining | | 1 | |
| 3A | 477 953 517 | cover | | 1 | |
| 4 | N 014 707 4 | pan-head screw<br>M 8 X 15 | | 1 | |
| 5 | 111 953 519 G | switch<br>windscreen wiper system<br>windscreen washer system | | 1 | |
| 8 | 911 347 771 02 | ball bearing | | 1 | |
| 9 | 111 953 563 A | circlip<br>ball bearing | | 1 | |
| 10 | 111 953 572 A | spacer sleeve | | 4 | |
| 11 | 111 953 573 A | pan-head screw | | 4 | |
| 12 | 111 953 575 | spring<br>direction indicator switch | | 1 | |
| 13 | 111 971 983 | flat plug<br>2,8 X 0,8 | | X | |
| 14 | 111 953 631 | terminal sleeve housing<br>ignition starter switch | | 1 | |
| 15 | 111 953 633 | terminal sleeve housing<br>direction indicator switch | | 1 | |
| 16 | 111 953 635 A | terminal sleeve housing<br>windscreen wiper system | | 1 | |
| 17 | 113 905 851 A | steering lock<br>without<br>ignition starter switch | | 1 | |
| 18 | 111 905 865 L | ignition starter switch | | 1 | |
| 19 | E N 010 802 2 | oval-head screw<br>AM 3 X 6 | | 1 | |
| | | - -- E N D -- - | | | |

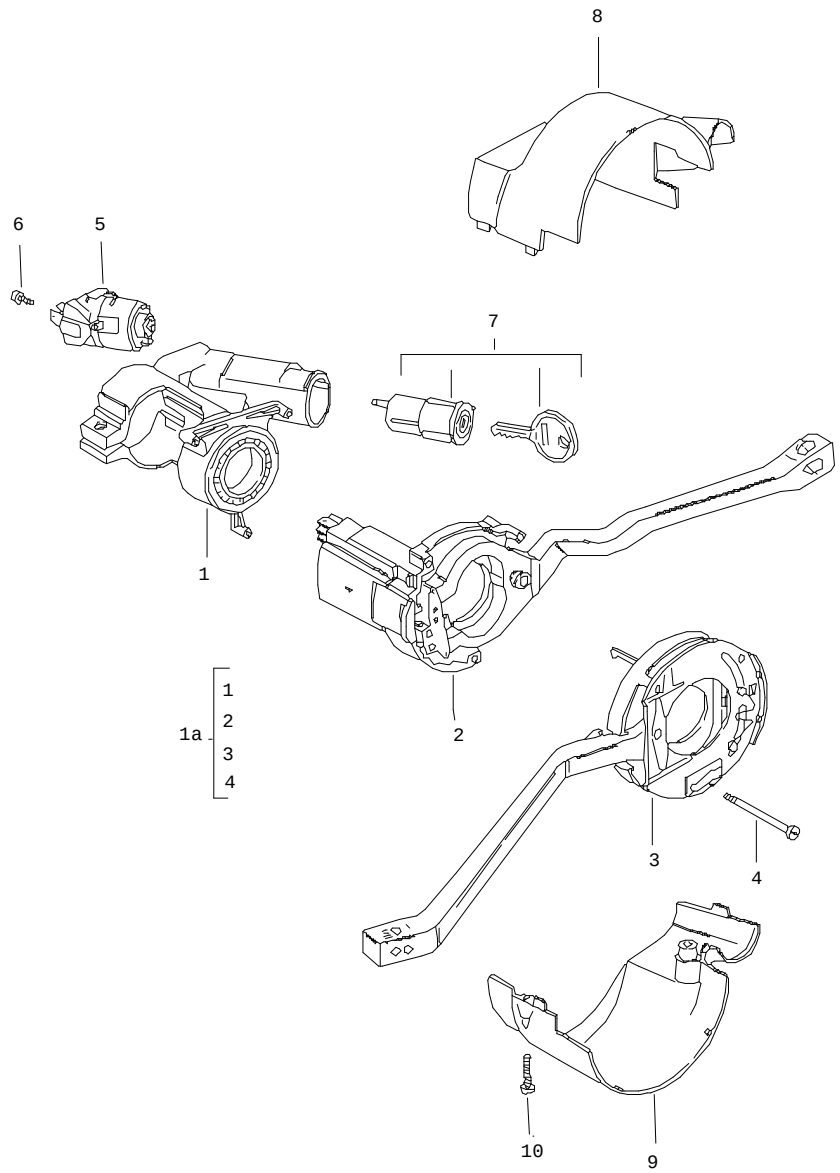


| Pos | Part Number | Name | Remarks | Qty | Model |
|---|---|---|---|---|---|
| | | steering column switch<br>steering lock | 81- | | |
| 1A | 477 953 505 | steering column switch<br>with<br>steering lock | | 1 | |
| | 89S | cadbury brown | | | |
| 1 | 321 905 851 D | steering lock housing | | 1 | |
| 2 | 477 953 902 | wiper switch | | 1 | |
| | 01C | black | | | |
| | 89S | brown | | | |
| 3 | 477 953 901 | direction indicator switch | | 1 | |
| | 01C | black | | | |
| | 89S | brown | | | |
| 4 | 321 953 573 | screw | | 3 | |
| 5 | 111 905 865 L | ignition starter switch | | 1 | |
| 6 | 900 146 104 02 | screw | | 1 | |
| 7 | 477 905 855 C | lock cylinder<br>w/o stipulated lock number | | 1 | |
| (7) | 477 905 855 D | lock cylinder<br>with stipulated lock-no.<br>key<br>see group<br>8/04/05 | | 1 | |
| 8 | 477 953 515 B | lining<br>upper part | | 1 | |
| | 1DB | black | | | |
| | 4RB | cadbury brown | | | |
| 9 | 477 953 516 B | lining<br>lower part | | 1 | |
| | 1DB | black | | | |
| | 4RB | cadbury brown | | | |
| 10 | N 043 959 1 | tapping screw<br>B 2,9 X 22 | | 2 | |

| Pos | Part Number | Name | Remarks | Qty | Model | Pos | Part Number | Name | Remarks | Qty | Model |
|---|---|---|---|---|---|---|---|---|---|---|---|
| (10) | N 013 953 10 | tapping screw<br>2,9 X 9,5 | | 1 | | | | | | | |
| | | - -- E N D -- - | | | | | | | | | |

| Model | Year | MG | SG | Illustration | Restrictions | Update | 10:21 | 16.08.2004 | PORSCHE | PET | PORSCHE |
|---|---|---|---|---|---|---|---|---|---|---|---|
| 924 | 85 | 9 | 03 | 903-10 | | 179 | | | | | |

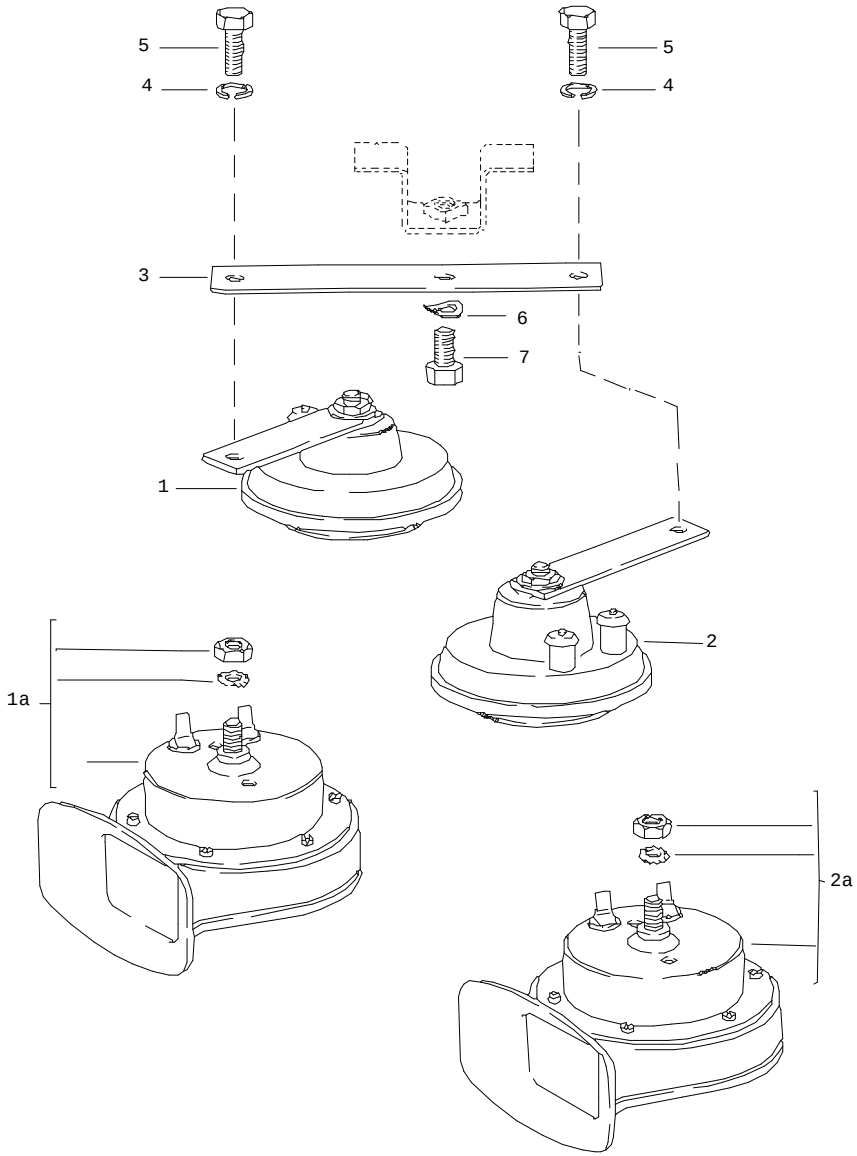


| Pos | Part Number | Name | Remarks | Qty | Model |
|---|---|---|---|---|---|
| | | horn | | | |
| 1 | 191 951 113 A | horn<br>low-pitched | -80 | 1 | 924 |
| 1A | 928 635 222 00 | fanfare<br>low-pitched | -80 | 1 | TURBO |
| (1A) | 928 635 222 00 | fanfare<br>low-pitched | 81- | 1 | |
| 2 | 944 637 103 01 | horn<br>high-pitched | -80 | 1 | 924 |
| 2A | 928 635 221 00 | fanfare<br>high-pitched | -80 | 1 | TURBO |
| (2A) | 928 635 221 00 | fanfare<br>high-pitched | 81- | 1 | |
| 3 | 171 951 199 B | support | -80 | 1 | 924 |
| (3) | 810 951 229 | spring clip | -80 | 1 | TURBO |
| (3) | 810 951 229 | spring clip | 81- | 1 | |
| 4 | 900 027 015 02 | lock ring<br>B 8 | -80 | 2 | 924 |
| 5 | N 010 239 11 | hexagon-head bolt<br>M 8 X 18 | -80 | 2 | 924 |
| 6 | N 012 228 3 | spring washer<br>B 8 | | 1 | |
| 7 | 900 075 078 02 | hexagon-head bolt<br>M 8 X 15 | | 1 | |
| | | - -- E N D -- - | | | |

| Model | Year | MG | SG | Illustration | Restrictions | Update | | | | |
|---|---|---|---|---|---|---|---|---|---|---|
| 924 | 85 | 9 | 04 | 904-00 | | 179 | 10:21 | 16.08.2004 | PORSCHE | PET | PORSCHE |

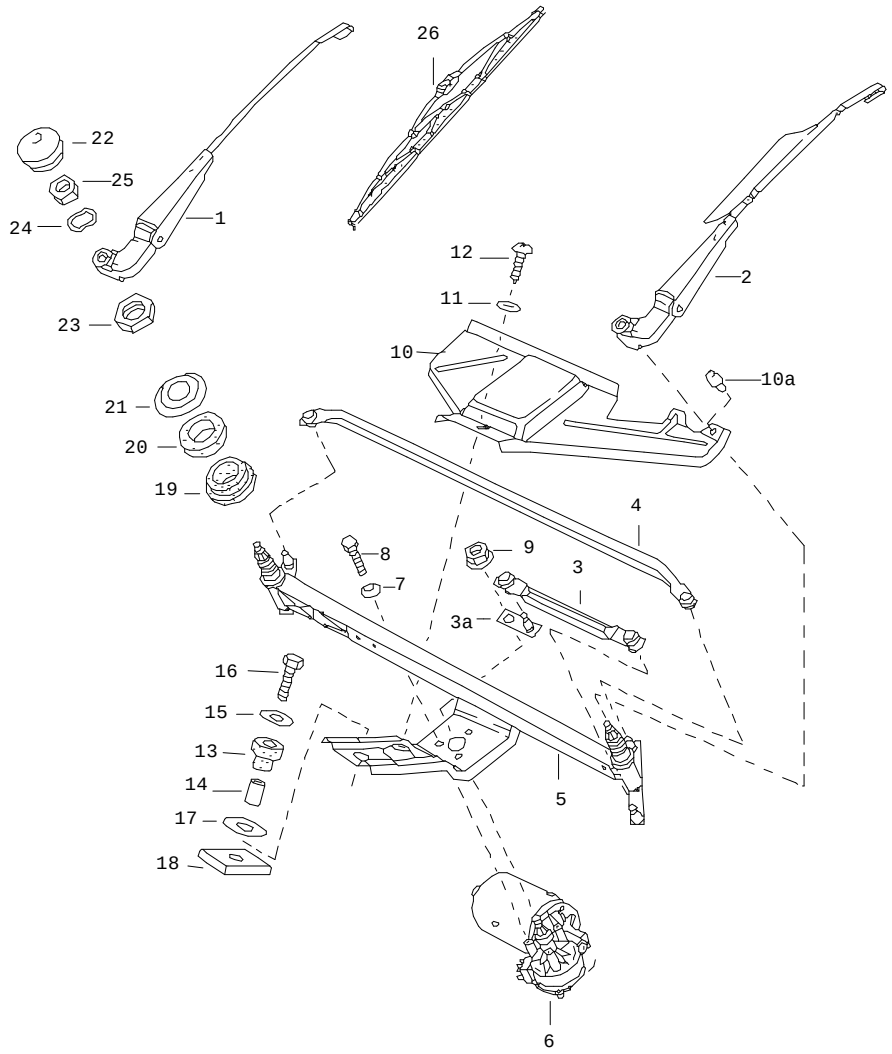


| Pos | Part Number | Name | Remarks | Qty | Model |
|---|---|---|---|---|---|
| | | windscreen wiper system | | | |
| 1 | 477 955 028 | wiper arm<br>passenger's side | /LL | 1 | |
| (1) | 477 955 028 | wiper arm<br>driver's side | /RL -80 | 1 | |
| (1) | 478 955 027 A | wiper arm<br>driver's side | /RL 81- | 1 | |
| (2) | 477 955 027 | wiper arm<br>with spoiler<br>driver's side | /LL | 1 | |
| 3 | 477 955 035 B | connecting rod<br>short | | 1 | |
| 3A | 477 955 039 A | crank | | 1 | |
| 4 | 477 955 036 B | connecting rod<br>long | | 1 | |
| 5 | 477 955 041 B | frame | | 1 | 924/TURBO |
| (5) | E 937 628 030 01 | frame | | 1 | GT |
| 6 | 477 955 113 B | windscreen wiper motor | | 1 | |
| 7 | N 012 105 3 | serrated lock washer<br>A 6,4 | | 3 | |
| 8 | 999 072 005 09 | hexagon-head bolt<br>M 6 X 12 | | 3 | |
| 9 | 999 084 045 02 | lock nut<br>M 6 | | 1 | |
| 10 | 477 955 123 | cover | /LL | 1 | |
| (10) | 478 955 123 | cover | /RL | 1 | |
| 10A | E 803 827 589 A | buffer | | 1 | |
| 11 | 900 151 028 02 | washer<br>B 4,3 | | 1 | |
| 12 | N 013 957 5 | tapping screw<br>BZ 3,5 X 9,5 | | 1 | |
| 13 | 477 955 127 | rubber bush | | 1 | |
| 14 | 477 955 128 | spacer sleeve | | 1 | |

| Pos | Part Number | Name | Remarks | Qty | Model |
|---|---|---|---|---|---|
| 15 | 900 151 029 02 | washer<br>B 6,4 | | 1 | |
| 16 | N 010 217 4 | hexagon-head bolt<br>M 6 X 20 | | 1 | |
| 17 | 281 711 135 | washer<br>12,2 X 28 X 2 | | 1 | |
| 18 | 477 955 129 | desk pad | | 1 | |
| 19 | 901 628 924 00 | rubber bush | | 2 | |
| 20 | 901 628 923 01 | rubber bush | | 2 | |
| 21 | 911 628 963 00 | washer | | 2 | |
| 22 | 477 955 205 | cap | | 2 | |
| 23 | 481 955 243 A | hexagon nut<br>M 16 X 1 | | 2 | |
| 24 | 803 955 437 | washer | | 2 | |
| 25 | N 011 008 8 | hexagon nut<br>M 8 | | 2 | |
| 26 | 477 955 425 B | windscreen wiper blade | 80 | 2 | |
| (26) | 478 955 425 | wiper blade | 81- | 2 | |
| | | - -- E N D -- - | | | |

| Pos | Part Number | Name | Remarks | Qty | Model |
|---|---|---|---|---|---|

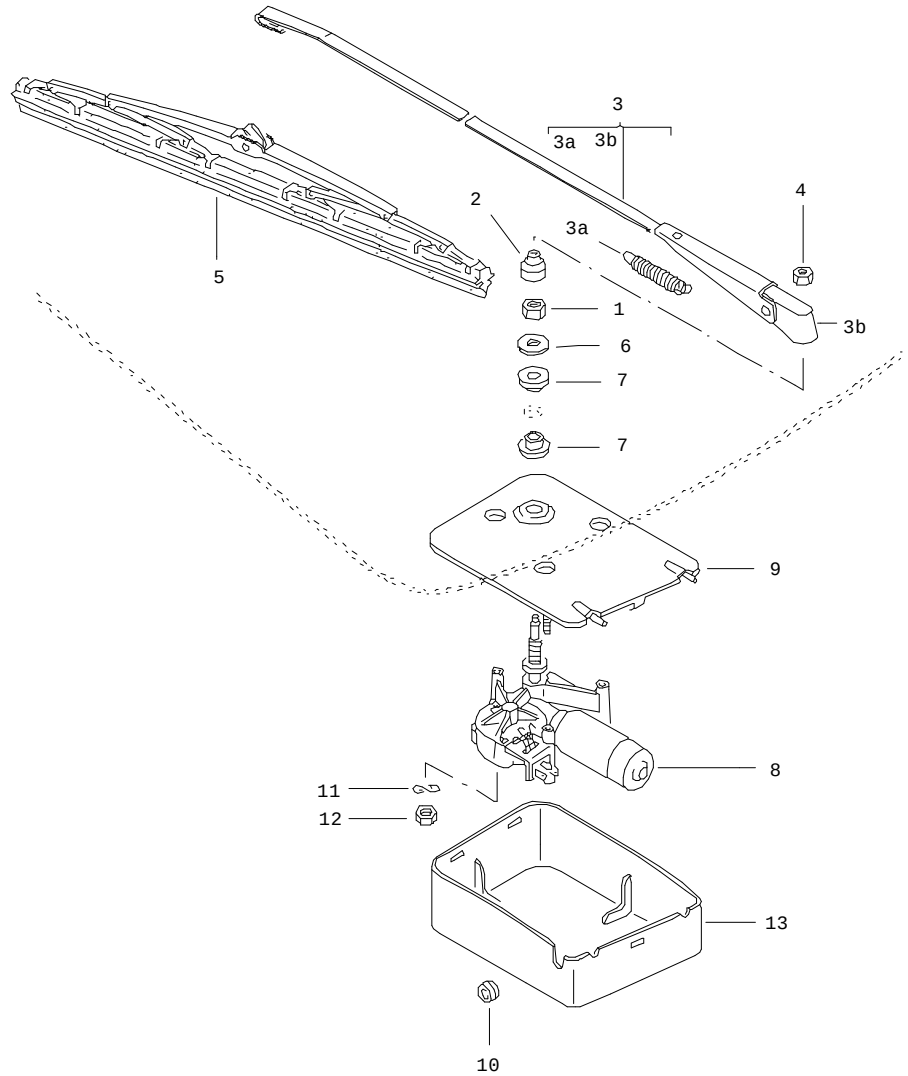


| Pos | Part Number | Name | Remarks | Qty | Model |
|---|---|---|---|---|---|
| | | rear window wiper | | | M 425 |
| 1 | 311 955 243 A | hexagon nut<br>M 12 X 1 | | 1 | |
| 2 | 211 955 275 A | cap | | 1 | |
| (3) | 477 955 409 A | wiper arm | | 1 | |
| 3A E | 477 955 411 | spring | | 1 | |
| 3B | 477 955 415 | cap | | 1 | |
| 4 | 999 084 045 02 | lock nut | | 1 | |
| (5) | 928 628 218 01 | wiper blade | | 1 | |
| (6) | 477 955 435 A | washer | | 1 | |
| 7 | 477 955 439 | grommet | | 2 | |
| 8 | 477 955 713 A | wiper motor<br>together with<br>rear lid<br>MOD.88-<br>use also: | | 1 | |
| - | 944 628 071 02 | plate | | 1 | |
| | 03C | black | | | |
| - | 445 955 753 | bush | | 1 | |
| - | 533 955 758 | grommet | | 1 | |
| - | 944 628 103 00 | bush | | 1 | |
| - | N 014 133 8 | oval-head screw<br>M 5 X 12 | | 2 | |
| - | N 011 524 7 | washer<br>A 6,4 | | 4 | |
| - | 999 209 017 02 | spacer sleeve | | 2 | |
| - | 999 702 180 40 | rubber sleeve | | 2 | |
| 9 | 477 955 715 B | plate | | 1 | |
| 10 | 111 941 189 | drain bush | | 1 | |
| 11 | N 012 226 5 | spring washer<br>B 6 | | 3 | |

| Pos | Part Number | Name | Remarks | Qty | Model | Pos | Part Number | Name | Remarks | Qty | Model |
|---|---|---|---|---|---|---|---|---|---|---|---|
| 12 | 900 076 010 02 | hexagon nut<br>M 6 | | 3 | | | | | | | |
| 13 | 477 955 737 | cap | | 1 | | | | | | | |
| - | 311 949 149 B | grommet<br>for<br>wiring harness | | 1 | | | | | | | |
| - | 171 971 999 A | terminal sleeve housing | | 1 | | | | | | | |
| | | - -- E N D -- - | | | | | | | | | |

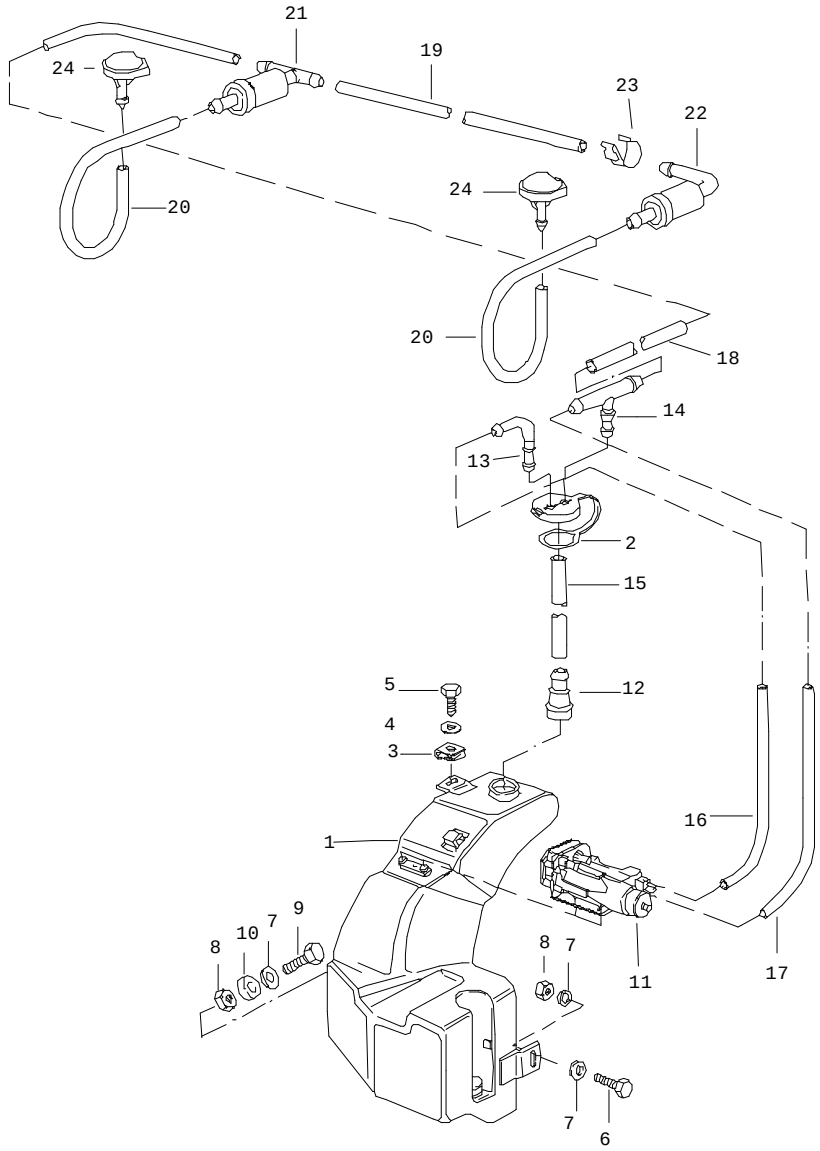


| Pos | Part Number | Name | Remarks | Qty | Model |
|---|---|---|---|---|---|
| | | windscreen washer system | | | |
| 1 | 477 955 451 D | water reservoir | | 1 | |
| 2 | 477 955 455 | cover | | 1 | |
| 3 | 477 955 461 | speed nut<br>6,3 X 22 | | 1 | |
| 4 | 900 151 029 02 | washer<br>6,4 | | 1 | |
| 5 | N 013 891 1 | tapping screw<br>B 6,3 X 19 | | 1 | |
| 6 | N 010 218 6 | hexagon-head bolt<br>M 6 X 25 | | 1 | |
| 7 | N 011 612 3 | washer<br>R 7 | | 4 | |
| 8 | 900 076 010 02 | hexagon nut<br>M 6 | | 2 | |
| 9 | N 010 220 3 | hexagon-head bolt<br>M 6 X 30 | | 1 | |
| 10 | 052 109 135 | spacer sleeve | | 1 | |
| 11 | 823 955 651 | pump | | 1 | |
| 12 | 911 628 749 00 | t-piece | | 1 | |
| 13 | 477 955 456 | connection piece | | 1 | |
| 14 | 477 955 459 | t-socket | | 1 | |
| - | N 020 301 1 | hose<br>4 X 1 | | * | |
| 15 | - | 500 MM | | 2 | |
| 16 | - | 260 MM | | 1 | |
| 17 | - | 280 MM | | 1 | |
| 18 | - | 1640 MM | -84 | 1 | |
| 19 | - | 390 MM | -84 | 1 | |
| 20 | - | 160 MM | -84 | 2 | |
| - | 999 181 722 40 | hose<br>4,6 X 1,8 | | X | |

| Pos | Part Number | Name | Remarks | Qty | Model |
|---|---|---|---|---|---|
| (18) | - | 1680 MM | 85- | 1 | |
| | | 500 MM | 85- | 1 | |
| | | 250 MM | /R 85- | 1 | |
| | | 330 MM | /L 85- | 1 | |
| - | N 100 020 01 | clamp | 85- | 8 | |
| 21 | 914 628 433 00 | valve | | 1 | |
| 22 | 477 955 481 | valve | | 1 | |
| 23 | 477 971 939 | cable terminal | -84 | 4 | |
| (23) | 477 955 981 | cable terminal | 85- | 1 | |
| (23) | 944 628 181 00 | retaining clip | | 6 | |
| 24 | 914 628 203 11 | nozzle | -84 | 2 | |
| (24) | 944 628 911 00 | nozzle<br>heatable | -84 | 2 | |
| (24) | 944 628 077 00 | nozzle | /R 85- | 1 | |
| | 01C | black<br>heatable | | | |
| (24) | 928 628 077 00 | nozzle | /L 85- | 1 | |
| | 70B | black<br>heatable | | | |
| | | - -- E N D -- - | | | |

| Pos | Part Number | Name | Remarks | Qty | Model |
|---|---|---|---|---|---|

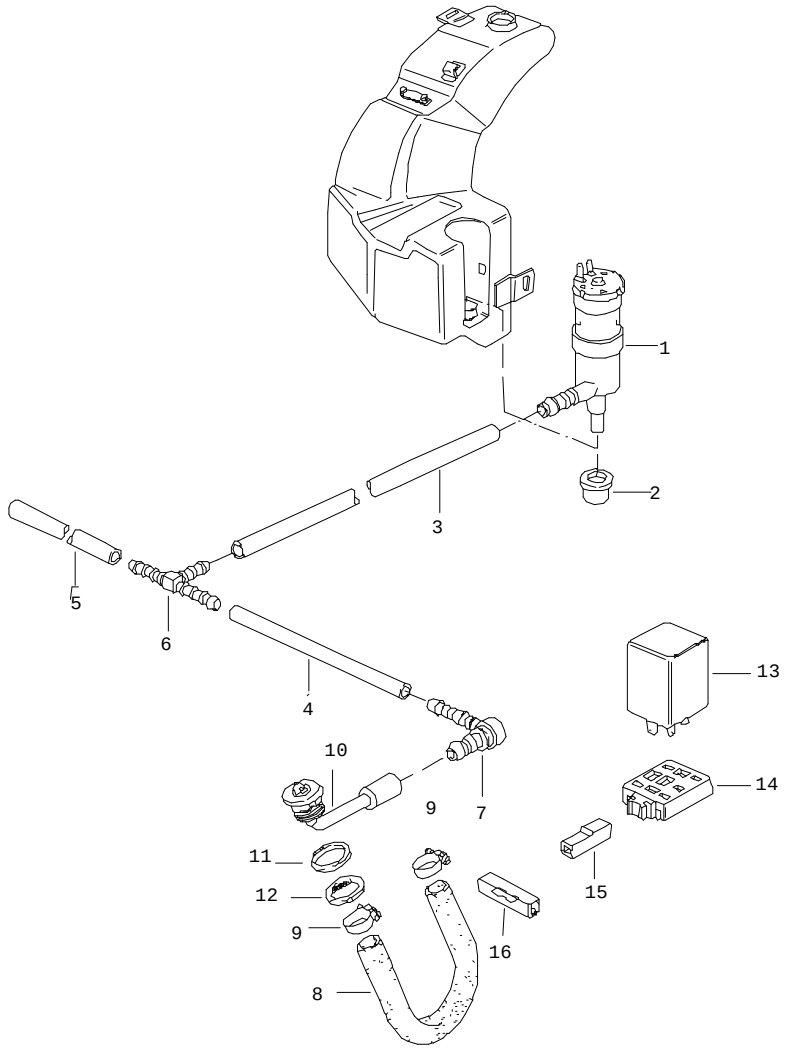


| Pos | Part Number | Name | Remarks | Qty | Model |
|---|---|---|---|---|---|
| | | headlight washer system | | | M 288 |
| 1 | 191 955 681 | pump | | 1 | |
| 2 | 431 955 465 A | gasket | | 1 | |
| - | N 020 126 1 | pipe<br>12,5 X 1,25 | | * | |
| 3 | - | 410 MM | | 1 | |
| 4 | - | 890 MM | | 1 | 924/TURBO |
| (4) | - | 800 MM | | 1 | GT |
| 5 | - | 100 MM | | 1 | 924/TURBO |
| (5) | - | 60 MM | | 1 | GT |
| 6 | 113 955 975 B | t-piece | | 1 | |
| 7 | 477 955 183 | pressure control valve | | 2 | |
| 8 | 928 528 161 02 | hose | | 1 | GT |
| 9 | N 023 570 2 | hose clamp | | 2 | GT |
| 10 | 477 955 177 | jet carrier | | 2 | 924/TURBO |
| (10) | E 937 628 071 00 | jet carrier | | 2 | GT |
| 11 | 937 628 185 00 | spacer sleeve | | 2 | GT |
| 12 | N 019 121 1 | nut<br>MPG 11 | | 2 | |
| 13 | 928 618 111 00 | relay | | 1 | |
| 14 | 135 937 501 A | terminal sleeve housing | | 1 | |
| 15 | 825 971 990 | terminal sleeve housing | | 1 | |
| 16 | 111 937 077 E | line distributor | | 1 | |
| | | - -- E N D -- - | | | |

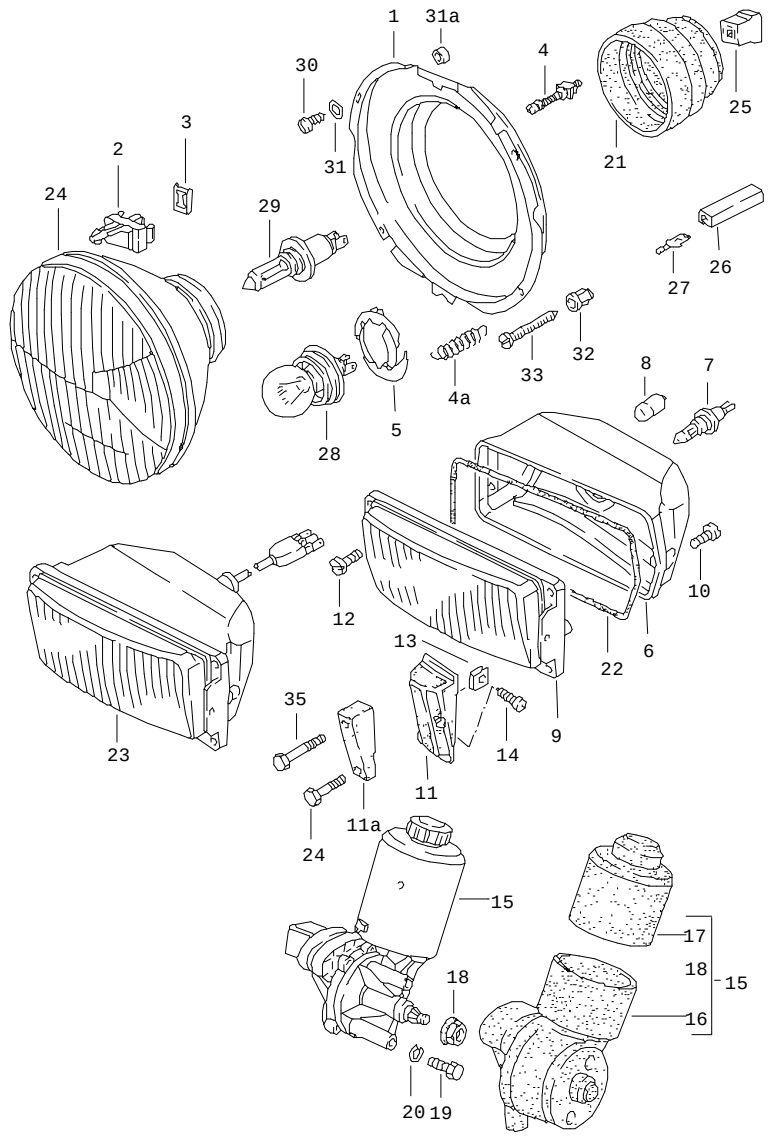


| Pos | Part Number | Name | Remarks | Qty | Model |
|---|---|---|---|---|---|
| | | pop-up headlight<br>electric motor<br>for<br>pop-up headlight<br>additional headlamp | | | |
| 1 | 477 941 046 | retaining frame | | 2 | |
| 2 | 321 941 133 | articulated piece | | 2 | |
| 3 | 321 941 135 | tab washer<br>for<br>articulated piece | | 2 | |
| 4 | 113 941 141 | adjusting screw | | 4 | |
| 4A | 321 941 157 | tension spring | | 2 | |
| 6 | 477 941 311 | reflector | /L | 1 | |
| (6) | 477 941 311 A | reflector | /R | 1 | |
| 7 | 900 631 126 90 | halogen bulb<br>H 3 | | 2 | |
| 8 | 900 631 103 90 | bulb<br>12V 4W | | 2 | |
| 9 | 944 631 407 00 | additional headlamp<br>with<br>retaining frame | /L | 1 | |
| (9) | 944 631 409 00 | additional headlamp<br>yellow<br>with<br>retaining frame | /L | 1 | (F) |
| (9) | 944 631 408 00 | additional headlamp<br>with<br>retaining frame | /R | 1 | |
| (9) | E 944 631 410 00 | additional headlamp<br>yellow<br>with<br>retaining frame | /R | 1 | (F) |
| 10 | N 014 122 8 | oval-head screw<br>M 4 X 8 | | 6 | |
| 11 | 477 807 153 | buffer | /L | 1 | |
| (11) | 477 807 154 | buffer | /R | 1 | |
| 11A | 477 807 401 | buffer | /L | 1 | M 058 |

| Pos | Part Number | Name | Remarks | Qty | Model |
|---|---|---|---|---|---|
| (11A) | 477 807 402 | buffer | /R | 1 | M 058 |
| 12 | 900 146 011 02 | oval-head screw<br>AM 4 X 10 | | 6 | |
| 13 | 477 807 191 | speed nut | | 2 | |
| 14 | 900 143 047 07 | tapping screw<br>B 4,2 X 19 | | 2 | |
| 15 | 477 941 379 B | electric motor<br>for<br>pop-up headlight | | 1 | 924 |
| (15) | 477 941 379 C | electric motor<br>for<br>pop-up headlight | | 1 | TURBO/GT |
| 16 | 477 941 386 | protection cap<br>lower | | 1 | 924 |
| (16) | 477 941 388 | protection cap<br>lower | | 1 | TURBO/GT |
| 17 | 477 941 387 | protection cap<br>upper | | 1 | |
| - | 477 941 383 | diode<br>for<br>electric motor<br>pop-up headlight | | X | |
| 18 | 999 084 045 02 | lock nut<br>M 6 | | 1 | |
| (18) | 999 084 049 02 | lock nut<br>M 8 | | | |
| 19 | 999 072 005 09 | hexagon-head bolt<br>M 6 X 12 | | 3 | |
| 20 | N 012 006 4 | lock ring<br>B 6 | | 3 | |
| 21 | 477 941 659 A | cap<br>for<br>headlamp unit | | 2 | |
| 22 | 477 941 715 | gasket | | 2 | 924 |
| 23 | 477 941 751 D | high-beam headlight<br>white | /L | 1 | |
| (23) | 944 631 409 00 | additional headlamp<br>yellow | /L | 1 | (F) |
| (23) | 477 941 752 D | high-beam headlight<br>white | /R | 1 | |
| (23) | 944 631 410 00 | additional headlamp<br>yellow | /R | 1 | (F) |
| 24 | 477 941 771 B | headlamp | | 2 | |
| (24) | 477 941 773 | headlamp | /RL | 2 | |
| 25 | 111 941 341 | terminal sleeve housing<br>3-pole | | 2 | |
| 26 | 111 971 977 | plug with guide | | 6 | |
| 27 | 111 971 986 | flat plug<br>6,3 X 0,8<br>with<br>clips | | 6 | |
| 29 | 999 631 202 90 | halogen bulb<br>H 4 | | 2 | |
| (29) | 999 631 202 91 | halogen bulb<br>H 4 | | 2 | (F) |
| 30 | N 013 964 4 | tapping screw<br>B 4,2 X 16 | | 8 | |
| (30) | 900 143 041 00 | tapping screw<br>B 3,9 X 19 | | 8 | |
| 31 | 900 025 003 02 | washer<br>A 5,3 | | 8 | |
| 31A | 477 941 543 | spacer sleeve | | X | |
| 32 | 477 857 173 | clip | | 2 | |
| 33 | N 043 979 2 | tapping screw<br>BZ 4,2 X 45 | | 2 | |
| 34 | E N 030 116 1 | oval-head screw<br>M 4 X 25 | | 2 | M 058 |
| 35 | E N 030 117 2 | oval-head screw<br>M 4 X 40 | | 2 | M 058 |
| | | fog headlamp<br>see group<br>9/98/00 | | | |

| Pos | Part Number | Name | Remarks | Qty | Model | Pos | Part Number | Name | Remarks | Qty | Model |
|---|---|---|---|---|---|---|---|---|---|---|---|
| | | - -- E N D -- - | | | | | | | | | |

| Model | Year | MG | SG | Illustration | Restrictions | Update | | | | |
|---|---|---|---|---|---|---|---|---|---|---|
| 924 | 85 | 9 | 05 | 905-10 | | 179 | 10:22 | 16.08.2004 | PORSCHE | PET | PORSCHE |

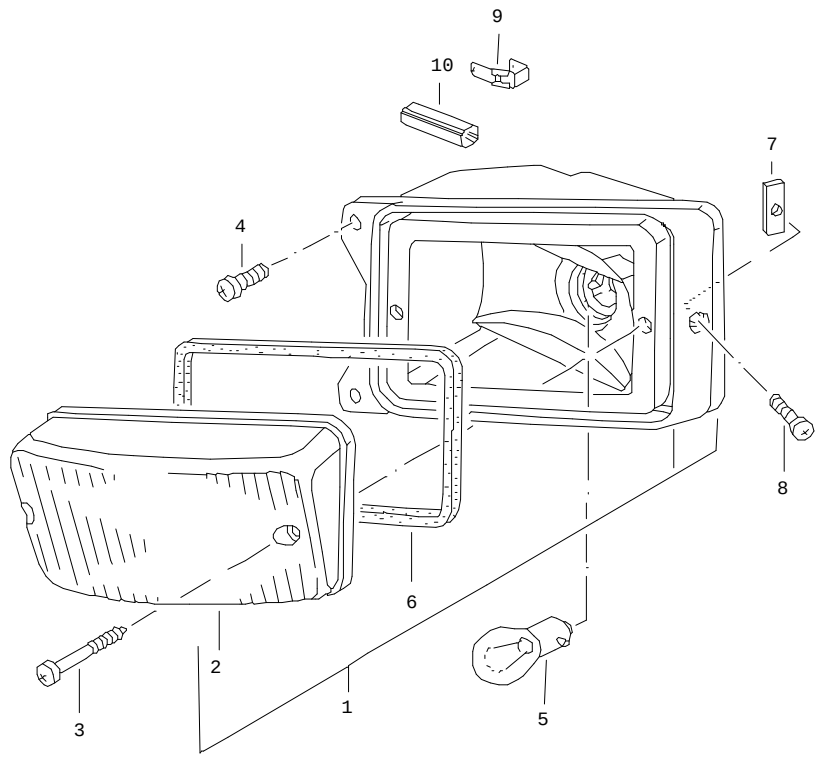


| Pos | Part Number | Name | Remarks | Qty | Model |
|---|---|---|---|---|---|
| | | direction indicator light | | | |
| 1 | 477 953 043 | direction indicator light | /L | 1 | |
| (1) | 477 953 044 | direction indicator light | /R | 1 | |
| 2 | 477 953 161 | lens | /L | 1 | |
| (2) | 477 953 162 | lens | /R | 1 | |
| 3 | 331 945 185 | oval-head screw | | 4 | |
| 4 | 900 146 011 02 | oval-head screw | | 4 | |
| 5 | 900 631 127 90 | bulb<br>RL 12V, 21 W | | 2 | |
| 6 | 477 953 165 | gasket | | 2 | |
| 7 | 477 953 661 | threaded plate | | 2 | |
| 8 | N 014 119 1 | oval-head screw<br>BM 4 X 20 Z | | 2 | |
| 9 | 111 971 511 | line distributor | | 1 | |
| 10 | 111 971 921 | protection cap<br>for<br>flat connector | | 4 | |
| | | - -- E N D -- - | | | |

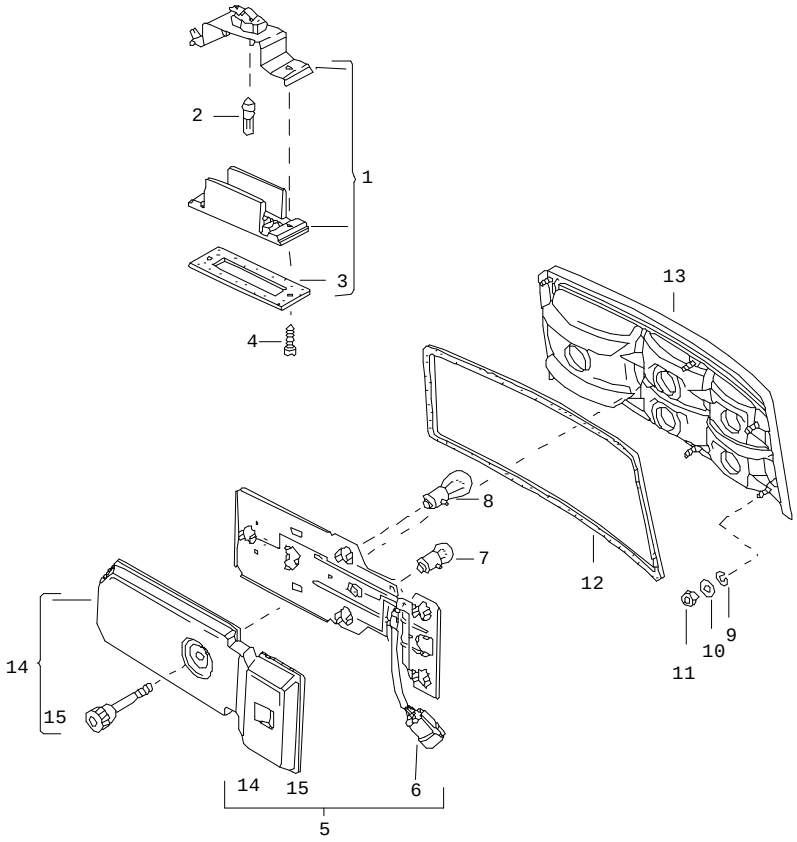


| Pos | Part Number | Name | Remarks | Qty | Model |
|---|---|---|---|---|---|
| | | license plate light<br>rear light | | | |
| 1 | 477 943 021 A | license plate light | | 2 | |
| 2 | 900 631 103 90 | bulb<br>HL 12 V, 4 W | | 2 | |
| 3 | 477 943 131 | gasket | | 2 | |
| 4 | N 013 961 2 | tapping screw<br>B 3,9 X 13 | | 2 | |
| 5 | 477 945 113 | bulb holder<br>rear light | /L | 1 | |
| (5) | 477 945 114 | bulb holder<br>rear light | /R | 1 | |
| 6 | 803 971 980 | connector<br>7-pole | | 2 | |
| 7 | 900 631 104 90 | bulb<br>C 12, 5W | | 2 | |
| 8 | 900 631 127 90 | bulb<br>RL 12V, 21W | | 7 | |
| 9 | N 012 005 3 | lock ring<br>B 5 | | 12 | |
| 10 | N 012 225 1 | spring washer<br>B 5 | | 12 | |
| 11 | N 011 005 14 | hexagon nut<br>M 5 | | 12 | |
| - | 000 043 172 00 | sealing cord<br>$ 9 MM<br>roller<br>10 M | | * | |
| 12 | - | 1070 MM | | 2 | |
| 13 | 477 945 205 | housing | /L | 1 | |
| (13) | 477 945 206 | housing | /R | 1 | |
| (13) | 477 945 215 | housing<br>with rear foglamp | /L | 1 | |
| (13) | 477 945 216 | housing<br>with rear foglamp | /R | 1 | |

| Pos | Part Number | Name | Remarks | Qty | Model | Pos | Part Number | Name | Remarks | Qty | Model |
|---|---|---|---|---|---|---|---|---|---|---|---|
| 14 | 477 945 285 | cap | | 2 | | | | | | | |
| 15 | 477 945 285 | cap | | 2 | | | | | | | |
| | | - -- E N D -- - | | | | | | | | | |

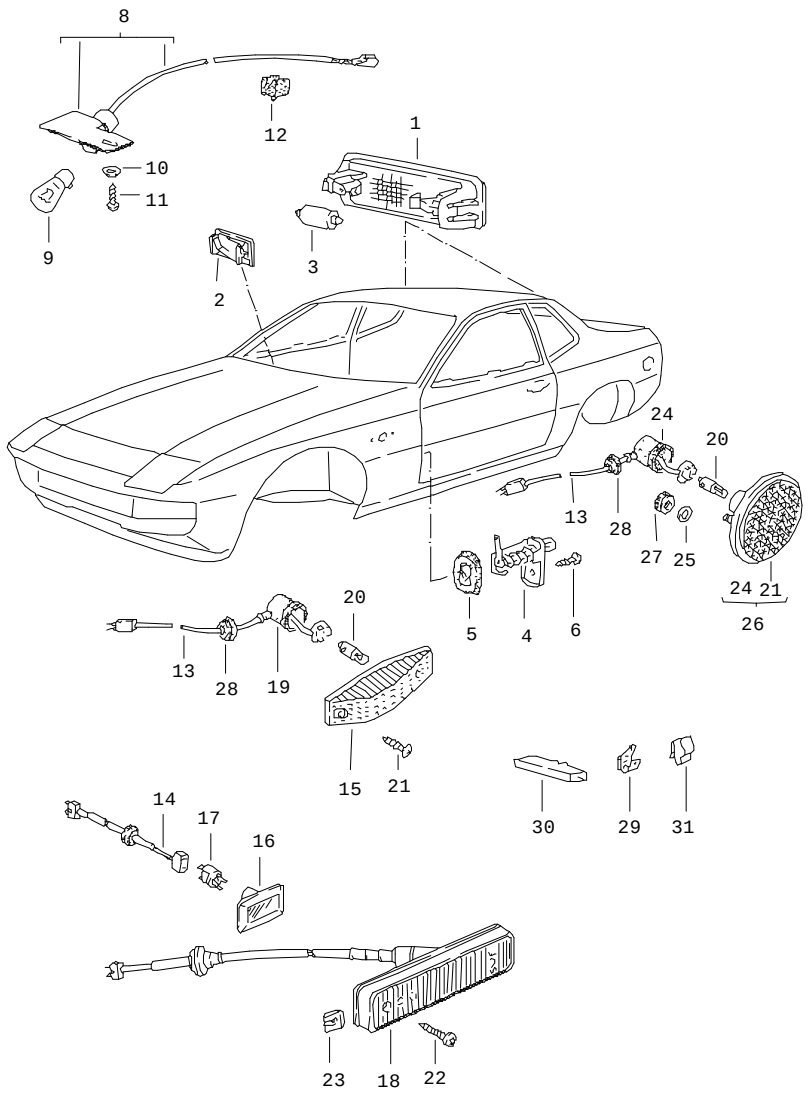


| Pos | Part Number | Name | Remarks | Qty | Model |
|---|---|---|---|---|---|
| | | interior light<br>side turn signal | | | |
| 1 | 823 947 105 B | interior light<br>luggage boot lamp | | 2 | |
| 2 | 171 947 311 | glove compartment light | | 1 | |
| 3 | 900 631 106 90 | linolite lamp<br>K 12V, 10W | | 2 | |
| (3) | 999 631 018 90 | bulb<br>M 12V, 3W | | 1 | |
| 4 | 968 613 601 00 | contact switch | | 2 | |
| 5 | 944 613 114 00 | gasket | | 2 | |
| 6 | N 013 957 5 | tapping screw<br>BZ 3,5 X 9,5 | | 2 | |
| 8 | 477 947 601 A | engine compartment lamp | | 1 | |
| 9 | 900 631 115 90 | bulb<br>G 12V, 10W | | 1 | |
| 10 | 900 151 028 02 | washer<br>4,3 | | 1 | |
| 11 | 900 143 031 02 | oval-head sheetmetal screw<br>B 4,2 X 9,5 | | 1 | |
| 12 | 477 947 633 | clip | | 3 | |
| 13 | 477 949 111 | bulb holder | -80 | 2 | M 046 |
| 14 | 161 949 111 | bulb holder | 81- | 2 | 924/TURBO |
| 15 | E 321 949 117 | side turn signal<br>yellow | -80 | 2 | M 046 |
| 16 | 4A0 949 101 | side turn signal<br>yellow | 81- | 2 | 924/TURBO |
| 17 | 477 971 193 | harness<br>for<br>side turn signal | 81- | 2 | 924,TURBO |
| 18 | 937 631 410 00 | side turn signal<br>yellow | | 2 | GT |
| 19 | 321 945 139 | gasket<br>for<br>side turn signal | -80 | 2 | M 046 |

| Pos | Part Number | Name | Remarks | Qty | Model |
|---|---|---|---|---|---|
| 20 | 900 631 103 90 | bulb<br>HL 12V, 4W | | 6 | |
| (20) | 999 631 032 90 | bulb<br>W 10/5 12V 5W | 81- | 2 | 924,TURBO |
| 21 | N 013 964 4 | tapping screw<br>B 4,2 X 16 | -80 | 4 | M 046 |
| 22 | 900 143 178 07 | oval-head sheetmetal screw<br>B 3,9 X 22 | | 2 | GT |
| 23 | E N 045 425 1 | speed nut<br>B 3,9 | | 2 | GT |
| 28 | E 311 971 913 | grommet | | 6 | |
| 29 | 111 971 511 | line distributor | | 2 | |
| 30 | 111 971 977 | plug with guide<br>single pole | | 2 | |
| | | - -- E N D -- - | | | |

| Pos | Part Number | Name | Remarks | Qty | Model |
|---|---|---|---|---|---|

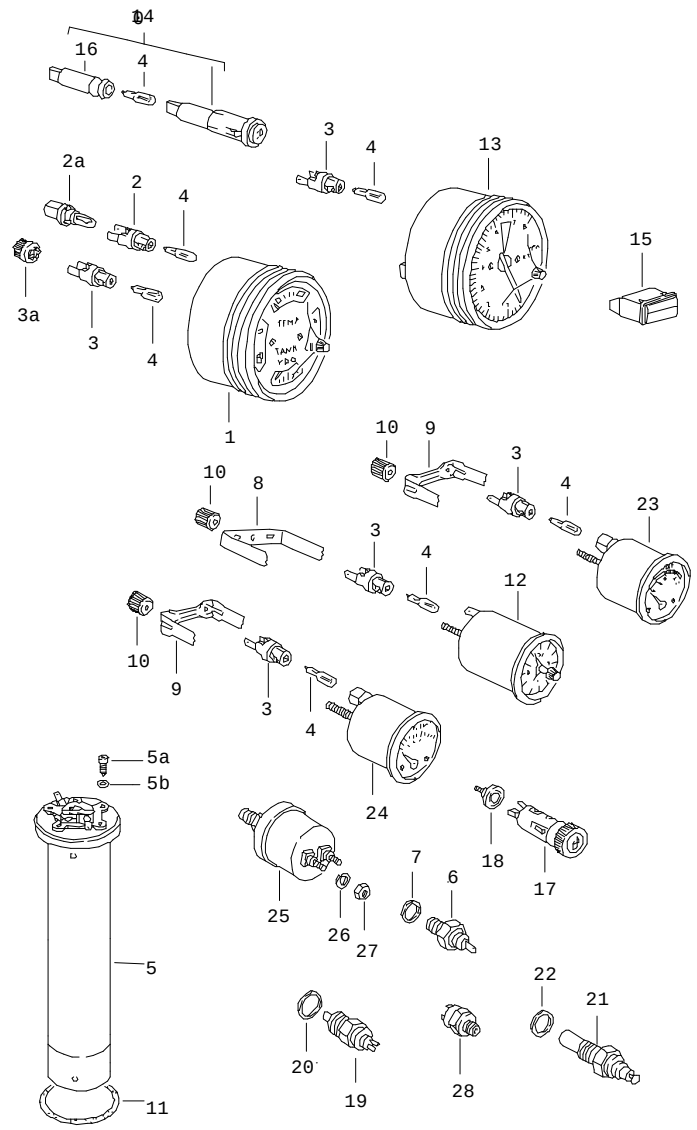


| Pos | Part Number | Name | Remarks | Qty | Model |
|---|---|---|---|---|---|
| | | instruments | | | |
| 1 | 477 919 033 B | instrument cluster | | 1 | 924 |
| (1) | 477 919 033 C | instrument cluster | -80 | 1 | TURBO |
| (1) | 477 919 033 D | instrument cluster | 81- | 1 | TURBO/GT |
| 2 | 914 631 179 10 | bulb holder<br>2-pole | | 5 | |
| 2A | 999 631 301 90 | bulb | | 7 | |
| 3 | 999 632 017 02 | bulb holder<br>single pole | | 6 | |
| 3A | 928 641 927 00 | bulb holder<br>generator | | 1 | |
| (3) | 477 919 213 | bulb holder<br>clock | | 1 | |
| 4 | 900 631 132 90 | bulb<br>W 12 V 1,2 W | | X | |
| 4A | 900 631 019 90 | bulb<br>12 V-3 W | | 1 | |
| 5 | 477 919 051 B | tank gauge | | 1 | |
| 5 | 477 919 051 B | tank gauge | -80 | 1 | TURBO |
| (5) | 937 641 031 00 | tank gauge | 81- | 1 | TURBO,GT |
| 5A | N 044 734 1 | pan-head screw<br>M 5 X 16 | | 5 | |
| 5B | N 013 802 1 | sealing ring<br>A 5 X 9 | | 5 | |
| 6 | 021 919 081 B | oil pressure switch | | 1 | |
| 7 | N 013 808 3 | sealing ring | | 1 | |
| 8 | E 477 919 115 | holder<br>for clock | | 1 | |
| 9 | 321 919 115 C | holder<br>42 MM<br>for oil pressure gauge<br>voltmeter | | 2 | |
| 10 | 411 957 117 | knurled nut<br>M 4 | | 5 | |

| Pos | Part Number | Name | Remarks | Qty | Model |
|---|---|---|---|---|---|
| 11 | 477 919 133 | sealing ring | | 1 | |
| 12 | 477 919 211 | clock | | 1 | 924 |
| 12 | 477 919 211 | clock | 81- | 1 | TURBO,GT |
| (12) | 477 919 211 A | clock | -80 | 1 | TURBO |
| 13 | 477 919 205 G | tachometer | -80 | 1 | 924 |
| (13) | 477 919 205 D | tachometer | -80 | 1 | TURBO |
| 13 | 477 919 205 G | tachometer | | 1 | 924 |
| (13) | 477 919 205 H | tachometer | 81 | 1 | TURBO,GT |
| (13) | 477 919 205 H | tachometer | 82- | 1 | TURBO |
| 14 | 477 919 209 | indicator light<br>high beam | -80 | 1 | (GB) |
| (14) | 477 919 210 A | indicator light | 81- | 1 | (GB) |
| (15) | 113 919 232 D | indicator light | -80 | 1 | |
| (15) | 171 919 235 | combination warning light | 81- | 1 | |
| (15) | E 911 632 013 05 | indicator light | /RL -80 | 1 | |
| (15) | 171 919 235 Q | combination warning light | /RL 81 | 1 | |
| (15) | 171 919 235 Q | combination warning light | /RL 82- | 1 | |
| (15) | 477 919 235 | combination warning light | | 1 | M 215 |
| 16 | 111 919 243 | bulb holder | | 1 | |
| 17 | 477 919 305 | cigarette lighter | -84 | 1 | |
| (17) | 477 919 307 | cigarette lighter | 85- | 1 | |
| - | N 012 469 1 | snap ring<br>for<br>cigarette lighter | | 1 | |
| 18 | 411 919 317 | glower | | 1 | |
| 19 | 084 941 521 | switch<br>back-up light | | 1 | |
| 20 | 900 123 106 30 | sealing ring<br>A 18 X 24 | | 1 | |
| 21 | 047 919 501 A | temperature sensor<br>coolant | | 1 | |
| 22 | N 013 806 2 | sealing ring | | 1 | |
| 23 | 477 919 531 | voltmeter | -80 | 1 | 924 |
| (23) | 477 919 531 B | voltmeter | -80 | 1 | TURBO |
| (23) | 477 919 531 D | voltmeter | 81- | 1 | |
| (24) | 477 919 551 E | oil pressure indicator | | 1 | 924 |
| (24) | E 477 919 551 C | oil pressure indicator | -80 | 1 | TURBO |
| 25 | 047 919 561 | oil pressure sender | | 1 | |
| 26 | N 012 224 3 | spring washer<br>A 4 | | 2 | |
| 27 | N 011 004 6 | hexagon nut<br>M 4 | | 1 | |
| 28 | 113 945 515 G | stop light switch<br>3-pole<br>A 13 | -80 | 2 | |
| (28) | 477 945 515 | stop light switch | | 1 | |
| - | 481 945 529 | nut<br>M 12 X 1 | | 1 | |
| - | N 011 531 7 | washer<br>A 13 | | 1 | |

- -- E N D -- -

| Model | Year | MG | SG | Illustration | Restrictions | Update | | | | |
|---|---|---|---|---|---|---|---|---|---|---|
| 924 | 85 | 9 | 06 | 906-05 | | 179 | 10:22 | 16.08.2004 | PORSCHE | PET | PORSCHE |

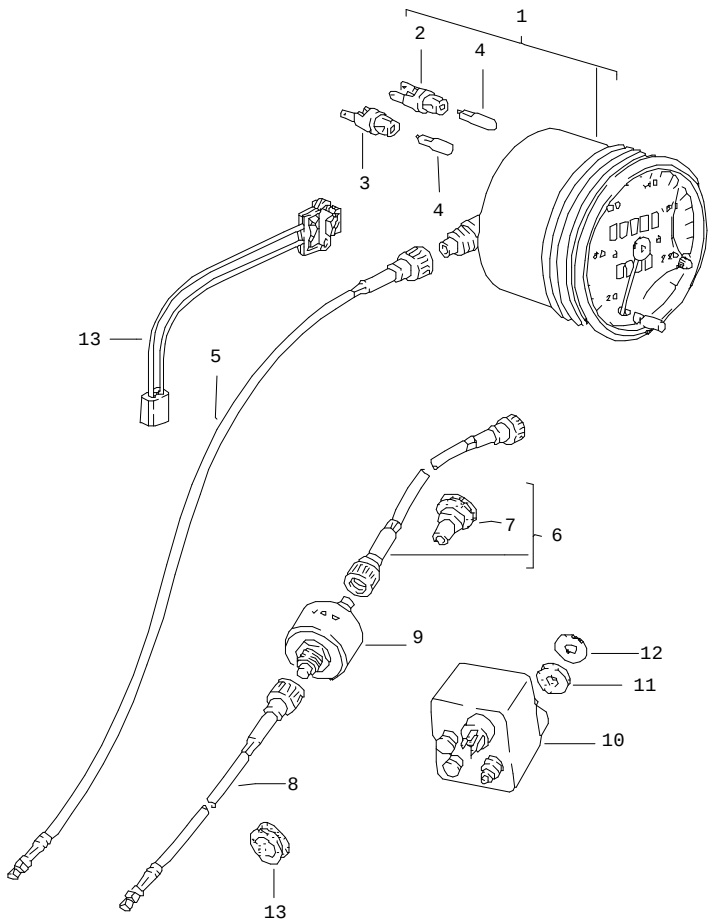


| Pos | Part Number | Name | Remarks | Qty | Model |
|---|---|---|---|---|---|
| | | speedometer | | | |
| 1 | 944 641 021 00 | speedometer<br>240 KM/H | | 1 | 924 |
| (1) | 477 957 031 C | speedometer<br>260 KM/H | -80 | 1 | TURBO |
| 1 | 944 641 029 00 | speedometer<br>260 KM/H | 81- | 1 | TURBO,GT |
| 1 | 944 641 025 00 | speedometer<br>170 MPH/260 KM/H | /RL | 1 | 924 |
| (1) | 477 957 031 G | speedometer<br>170 MPH/260 KM/H | /RL -80 | 1 | TURBO |
| 1 | 944 641 035 00 | speedometer<br>170 MPH/260 KM/H | /RL 81- | 1 | TURBO |
| 2 | 914 631 179 10 | bulb holder<br>2-pole | | 1 | |
| 3 | 999 632 017 02 | bulb holder<br>single pole | | 2 | |
| 4 | 900 631 132 90 | bulb<br>W 12 V, 1,2 W | | 3 | |
| 5 | 142 957 801 C | drive shaft | /LL | 1 | |
| (5) | 211 957 801 E | drive shaft | /RL | 1 | |
| (6) | 477 957 819 | drive shaft | | 1 | (SA) |
| 7 | 477 957 861 | rubber sleeve | /LL | 1 | |
| (7) | 477 823 591 | grommet | /RL | 1 | |
| (8) | 111 957 801 J | drive shaft | | 1 | (SA) |
| 9 | 944 641 237 00 | switch<br>speed warning device | | 1 | (SA) |
| - | 900 116 003 02 | circlip | | 1 | |
| - | 321 951 307 | buzzer | | 1 | (SA) |
| 13 | 113 957 855 | rubber sleeve | | 1 | |
| 13 | 944 641 251 00 | hall sender | | 1 | |
| | | - -- E N D -- - | | | |

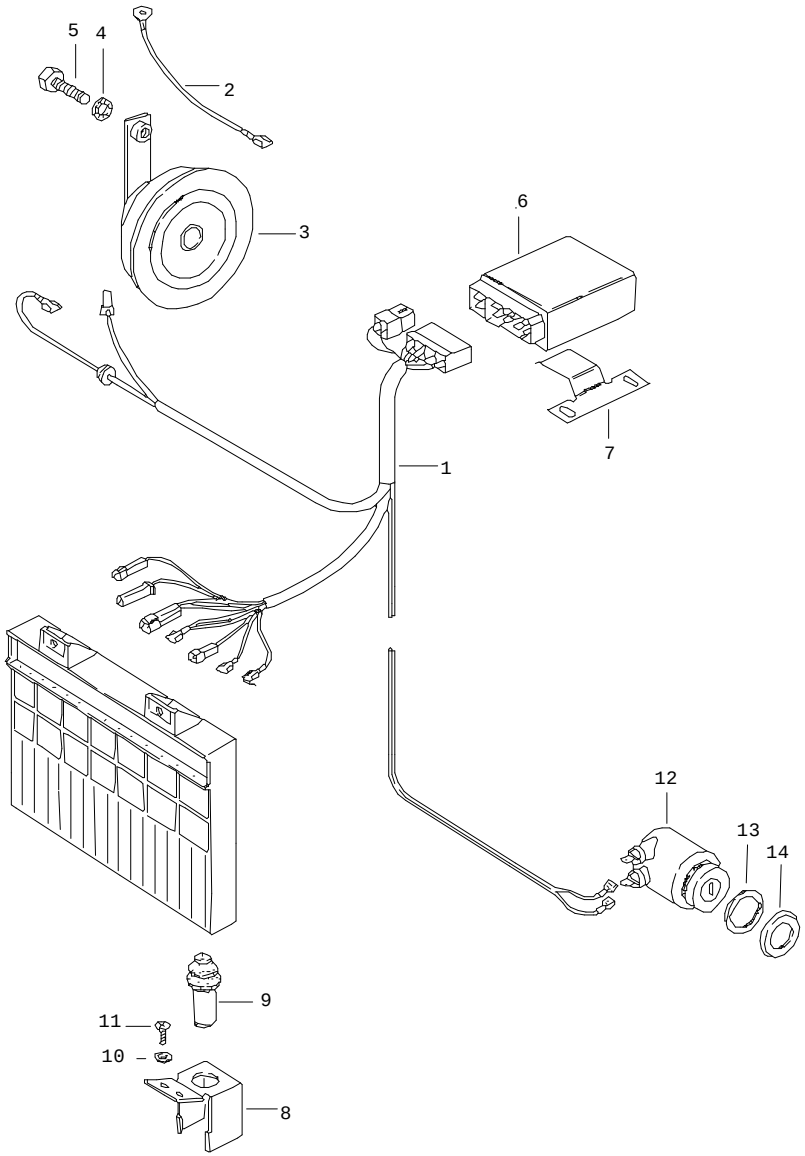


| Pos | Part Number | Name | Remarks | Qty | Model |
|---|---|---|---|---|---|
| | | alarm system | | | M 533 |
| 1 | 477 971 163 | wiring harness | | 1 | |
| 2 | E 477 971 325 | single line | | 1 | |
| 3 | 944 637 103 01 | horn | | 1 | |
| 4 | 999 523 102 02 | lock washer<br>J 8,4 | | 1 | |
| 5 | 900 075 087 02 | hexagon-head bolt<br>M 8 X 15 | | 1 | |
| 6 | 911 637 104 00 | control unit | | 1 | |
| 6 | 911 637 104 01 | control unit | | 1 | (CH) |
| 7 | 477 857 069 | support | | 1 | |
| 8 | 477 805 713 | support | | 1 | |
| 9 | 928 613 173 00 | contact switch | | 1 | |
| - | 477 971 837 | connector housing<br>for<br>contact switch | | 1 | |
| 10 | N 011 521 3 | washer<br>A 3,7 | | 2 | |
| 11 | N 013 957 5 | tapping screw<br>3,5 X 9,5 | | 2 | |
| 12 | 911 637 101 00 | alarm switch<br>with<br>key | | 1 | |
| 13 | 477 951 255 | washer | | 1 | |
| 14 | 477 951 251 | rose | | 1 | |
| | | - -- E N D -- - | | | |

| Model | Year | MG | SG | Illustration | Restrictions | Update | | | | |
|---|---|---|---|---|---|---|---|---|---|---|
| 924 | 85 | 9 | 10 | 910-00 | | 179 | 10:23 | 16.08.2004 | PORSCHE | PET | PORSCHE |

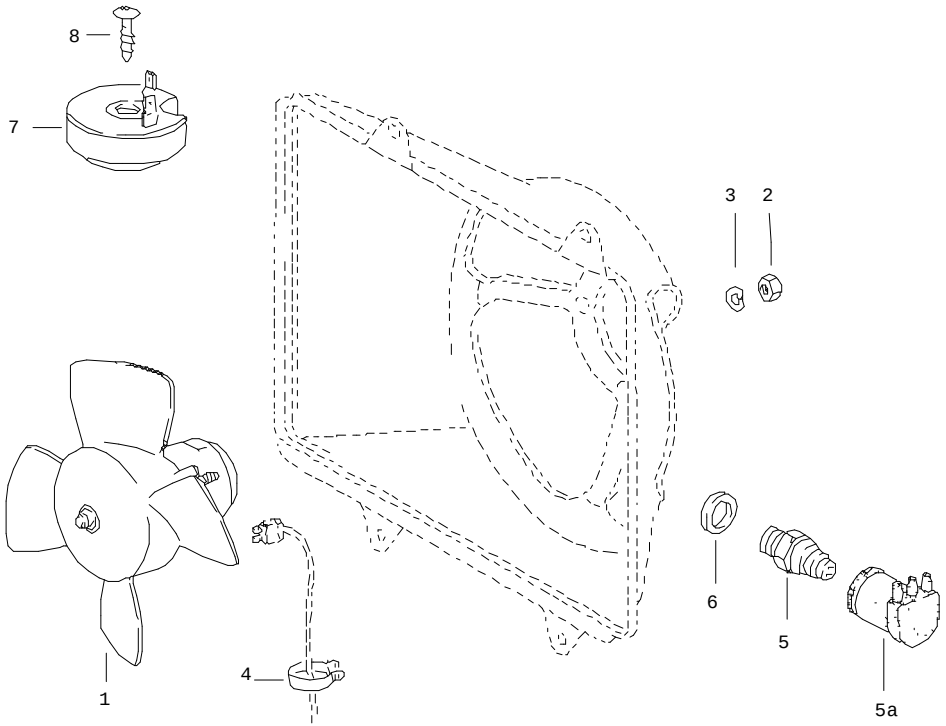


| Pos | Part Number | Name | Remarks | Qty | Model |
|---|---|---|---|---|---|
| | | electric fan | | | |
| 1 | 477 959 455 C | electric fan | | 1 | |
| (1) | 823 959 455 F | electric fan | | 1 | M 573 |
| 2 | 900 076 010 02 | hexagon nut<br>M 6 | | 3 | |
| 3 | N 011 524 7 | washer<br>A 6,4 | | 3 | |
| 4 | 999 651 168 40 | cable holder | | 1 | |
| 5 | 823 959 481 F | switch | | 1 | |
| 5A | 477 971 934 | protection cap | | 1 | |
| 6 | 900 123 118 30 | sealing ring<br>A 22 X 27 | | 1 | |
| 7 | 477 905 053 | series resistor | | 1 | |
| (7) | 477 905 052 | series resistor | | 1 | M 573 |
| 8 | N 013 964 4 | tapping screw<br>B 4,2 X 16 | | 1 | |
| | | - -- E N D -- - | | | |

| Model | Year | MG | SG | Illustration | Restrictions | Update | | |
|---|---|---|---|---|---|---|---|---|
| 924 | 85 | 9 | 98 | REP | | 179 | 10:58 | 16.08.2004 |

| Pos | Part Number | Name | Remarks | Qty | Model |
|---|---|---|---|---|---|
| | | installation set<br>repair kits | | | |
| >> | > 477 955 997 B | installation set<br>headlight washer system<br>comprising: | | 1 | |
| - | 191 955 681 | pump | | 1 | |
| - | 431 955 465 A | gasket | | 1 | |
| - | N 020 126 1 | pipe<br>12,5 X 1,25<br>410 MM<br>890 MM<br>100 MM | | X<br><br>1<br>1<br>1 | |
| - | 113 955 975 B | t-piece | | 1 | |
| - | 477 955 183 | pressure control valve | | 2 | |
| - | 477 955 177 | jet carrier | | 2 | |
| - | N 019 121 1 | nut<br>MPG 11 | | 2 | |
| - | 928 618 111 00 | relay | | 1 | |
| - | 135 937 501 A | terminal sleeve housing | | 1 | |
| - | 825 971 990 | terminal sleeve housing | | 1 | |
| - | 111 937 077 E | line distributor | | 1 | |
| - | 477 971 827 B | cable connection | | 1 | |
| - | 477 971 205 | wiring harness | | 1 | |
| - | 477 971 322 A | double line | | 1 | |
| - | 477 955 702 | switch | | 1 | |
| >> | > 477 955 995 | installation set<br>rear window wiper<br>comprising: | | 1 | TURBO,GT |
| - | 477 955 713 A | wiper motor | | 1 | |
| - | 477 955 715 B | plate | | 1 | |
| - | N 012 226 5 | spring washer<br>B 6 | | 3 | |
| - | 900 076 010 02 | hexagon nut<br>M 6 | | 3 | |
| - | 477 955 737 | cap | | 1 | |
| - | 477 955 439 | grommet | | 2 | |
| - | 477 955 437 | washer | | 1 | |

| Model | Year | MG | SG | Illustration | Restrictions | Update | | |
|---|---|---|---|---|---|---|---|---|
| 924 | 85 | 9 | 98 | REP | | 179 | 10:58 | 16.08.2004 |

| Pos | Part Number | Name | Remarks | Qty | Model |
|---|---|---|---|---|---|
| - | 311 955 243 A | hexagon nut<br>M 12 X 1 | | 1 | |
| - | 211 955 275 A | cap | | 1 | |
| - | 477 955 409 A | wiper arm | | 1 | |
| - | 999 084 045 02 | lock nut | | 1 | |
| - | 928 628 218 01 | wiper blade | | 1 | |
| - | 477 971 345 | harness<br>engine<br>rear window wiper | | 1 | |
| - | 477 971 346 | wiring harness<br>rocker switch<br>rear window wiper | | 1 | |
| - | 477 955 701 | rocker switch | | 1 | |
| - | 111 941 189 | drain bush | | 1 | |
| - | 999 652 106 02 | flat receptacle<br>6,3 X 1 | | 3 | |
| - | N 018 007 4 | insulating hose<br>100 MM | | 1 | |
| >> | > 477 941 903 A | installation set<br>fog headlamp<br>white<br>comprising: | | 1 | |
| - | 477 941 703 B | fog headlamp | | 2 | |
| - | 900 631 126 90 | halogen bulb<br>YC 12 V - 55 W | | 2 | |
| - | N 011 010 6 | hexagon nut<br>M 10 | | 2 | |
| - | 900 027 016 02 | lock ring<br>B 10 | | 2 | |
| - | 900 025 008 02 | washer<br>A 10,5 | | 2 | |
| - | E 131 867 549 | clamp | | 2 | |
| - | 477 941 535 | switch | | 1 | |
| - | E 141 957 397 A | bulb holder | | 1 | |
| - | 900 631 132 90 | bulb<br>W 12 V - 1,2 W | | 1 | |
| - | 477 963 137 | relay | | 1 | |
| - | 477 971 490 A | harness | | 1 | |

| Model | Year | MG | SG | Illustration | Restrictions | Update | | |
|---|---|---|---|---|---|---|---|---|
| 924 | 85 | 9 | 98 | REP | | 179 | 10:58 | 16.08.2004 |

| Pos | Part Number | Name | Remarks | Qty | Model |
|---|---|---|---|---|---|
| - | 477 971 491 A | harness | | 1 | |
| - | 477 971 827 B | cable connection | | 1 | |
| >> | > 477 941 904 A | installation set<br>fog headlamp<br>yellow<br>comprising: | | 1 | (F) |
| - | 477 941 703 A | fog headlamp | | 2 | (F) |
| - | 900 631 126 90 | halogen bulb<br>YC 12 V - 55 W | | 2 | |
| - | N 011 010 6 | hexagon nut<br>M 10 | | 2 | |
| - | 900 027 016 02 | lock ring<br>B 10 | | 2 | |
| - | 900 025 008 02 | washer<br>A 10,5 | | 2 | |
| - | E 131 867 549 | clamp | | 2 | |
| - | 477 941 535 | switch | | 1 | |
| - | E 141 957 397 A | bulb holder | | 1 | |
| - | 900 631 132 90 | bulb<br>W 12 V - 1,2 W | | 1 | |
| - | 477 963 137 | relay | | 1 | |
| - | 477 971 490 A | harness | | 1 | |
| - | 477 971 491 A | harness | | 1 | |
| - | 477 971 827 B | cable connection | | 1 | |
| - | 911 631 964 00 | light-diffusing lens<br>FARBLOS | | 2 | |
| - | 911 631 963 00 | light-diffusing lens<br>yellow | | 2 | (F) |
| - | 911 631 956 00 | gasket<br>for<br>light-diffusing lens | | 2 | |
| - | E 911 631 959 28 | ring for fog headlamp | | 2 | |
| | | - -- E N D -- - | | | |

| | |
|---|---|
| M000 | ! SUMMARY OF OPTIONAL EXTRAS "M"! |
| M020 | SPEEDOMETER WITH TWO SCALES MPH-KM/H |
| M026 | WITH ACTIVATED CHARCOAL CANISTER |
| M036 | IMPACT ABSORBERS |
| M036 | FRONT AND REAR |
| M046 | SIDE TURN SIGNALS |
| M058 | IMPACT ABSORBERS FRONT AND REAR |
| M062 | VERSION FOR SWEDEN |
| M124 | VERSION FOR FRANCE |
| M157 | ENGINE 85 KW (115 DIN-HP) WITH EXHAUST GAS |
| M157 | RECIRCULATION, CATALYTIC CONVERTER AND ACTIVATED |
| M157 | CARBON CONTAINER - VALID FROM FEBRUARY 77 - |
| M186 | SEAT BELT FOR BACK SEATS |
| M190 | INCREASED SIDE DOOR STRENGTH |
| M193 | VERSION FOR JAPAN |
| M215 | VERSION FOR SAUDI ARABIA |
| M220 | LOCKING DIFFERENTIAL 40 % |
| M249 | AUTOMATIC TRANSMISSION |
| M288 | HEADLAMP WASHER |
| M308 | PNEUMATIC SPRING FOR ENGINE HOOD |
| M402 | 924 - ANNIVERSARY CAR '82 |
| M402 | 50 YEARS PORSCHE-CONSTRUCTIONS |
| M402 | LACQUER: ZINNMETALLIC |
| M402 | INTERIOR EQUIPMENT: BLACK |
| M404 | STABILIZER, FRONT AND REAR |
| M409 | SPORT SEATS |
| M425 | REAR WINDOW WIPER |
| M426 | SPECIAL MODEL "LE MANS" '81 |
| M449 | SPECIAL MODEL FOR SWITZERLAND |
| M449 | LACQUER: ALPINE-WHITE |
| M449 | INTERIOR EQUIPMENT: BLACK |
| M471 | EQUIPMENT GROUP 1, SPORTING |
| M471 | 924: |
| M471 | TURBO-CHASSIS (VENTILATED BRAKE DISC, STABILIZERS, |
| M471 | SHOCK ABSORBERS (KONI), CAST SPOKED WHEELS - |
| M471 | 5 HOLES 5 1/2 J X 15) THREE-SPOKE-STEERING WHEEL |
| M471 | (LEATHER), REAR SPOILER |
| M471 | TURBO: |
| M471 | USA, CANADA, JAPAN -80 |
| M471 | VENTILATED BRAKE DISC, STABILIZERS, |
| M471 | SHOCK ABSORBERS (KONI), FORGED WHEELS - 5 HOLES |
| M471 | 6 J X 16 |
| M472 | TURBO: USA, CANADA, JAPAN -80 |
| M472 | WITH CHASSIS OF STANDARD MODEL |
| M479 | VERSION FOR AUSTRALIA |
| M483 | DEFERRING ENGINE PARTS FOR RIGHT HAND DRIVE |
| M492 | FOR LEFT-HAND TRAFFIC |
| M533 | ANTI-THEFT DEVICE |
| M553 | VERSION FOR USA, CANADA |
| M560 | DETACHABLE ROOF |
| M573 | AIR CONDITIONER |

| | |
|---|---|
| M592 | BRAKE FLUID LEVEL INDICATOR |
| M651 | ELECTRIC WINDOW OPENER |

TR203

THIS PARTS CATALOGUE CONTAINS ALL ORDER INFORMATION OF
TYPE 924 FROM MODEL YEAR 1980 TO MODEL YEAR 1985

IT IS AVAILABLE IN TWO EDITIONS IN THE FOLLOWING LANGUAGES:

EDITION
USA, CANADA - *

EDITION
ALL OTHER COUNTRIES - GERMAN

* - ENGLISH

- FRENCH

- ITALIAN

- SPANISH

UPDATING IS BEING PERFORMED BY CHANGING OF UPDATE.

THE EDITION CAN BE RECOGNIZED BY THE CURRENT NO.
YEAR IN THE BOTTOM LINE OF SUBJECT UPDATE.

THE PREVIOUS UPDATE SHOULD NO LONGER BE USED.

ALL ILLUSTRATIONS ARE SUBJECT TO CHANGE WITHOUT OBLIGATION.

"WE RESERVE THE RIGHT TO SUPPLY A SUBSEQUENTLY
PRODUCED COMPONENT, ON WHICH ADDITIONAL WORK
IS NECESSARY, INSTEAD OF THE COMPONENT LISTED IN
THE CATALOGUE"

| Model | Year | MG | SG | Illustration | VIN No. | Update | | |
|---|---|---|---|---|---|---|---|---|
| 924 | 85 | 9 | 10 | 910 | | 179 | 10:23 | 16.08.2004 |

TR006

EXPLANATION OF THE ABRIDGED VERSION OF THE VEHICLE IDENT. NUMBERS (VIN)
USED IN THE CATALOGUE

```
 DIGIT:                1 2 3  4 5 6  7 8  9  10  11  12  13 14 15 16 17

 EXAMPLE:              W P O  Z Z Z  9 2  Z   F   N   4   0  0  1  2  5
                                     ===      =   =   =   =============
                                      !       !   !   !         !
VEHICLE TYPE 1ST+2ND DIGIT----------------+   !   !   !         !
                                              !   !   !         !
MODEL YEAR----------------------------------------+   !         !
                                                  !   !         !
MANUFACTURING LOCATION--------------------------------+   !         !
                                                          !         !
VEHICLE TYPE 3RD DIGIT------------------------------------+         !
                                                                   !
SERIAL NUMBER-------------------------------------------------------+
```

| Model | Year | MG | SG | Illustration | VIN No. | Update | 10:23 | 16.08.2004 |
|---|---|---|---|---|---|---|---|---|
| 924 | 85 | 9 | 10 | 910 | | 179 | | |

FR205

| VEHICLE TYPE | MY | VIN | ENGINE TYPE | |
|---|---|---|---|---|
| 924 | 80 A | 92A04 10001>19999 | 047.8/9 | 92 KW |
| 924 TURBO | 80 A | 93A01 40001>49999 | M31.01 | 125 KW |
| 924 (USA)(CDN)(J) | 80 A | 92A04 30001>39999 | 047.E/F | 85 KW |
| 924 TURBO (USA)(CDN)(J) | 80 A | 93A01 50001>59999 | M31.02 | 110 KW |
| 924 | 81 B | 92BN4 00001>09999 | 047.8/9 | 92 KW |
| 924 TURBO | 81 B | 93BN1 00001>09999 | M31.03 | 130 KW |
| 924 CARRERA GT | 81 B | 93BN7 00001>09999 | M31.50 | 154 KW |
| 924 (USA)(CDN)(J) | 81 B | 92BN4 50001>59999 | 047.E/F | 85 KW |
| 924 TURBO (USA)(CDN)(J) | 81 B | 93BN1 50001>59999 | M31.04 | 115 KW |
| 924 | 82 C | 92CN4 00001>09999 | 047.8/9 | 92 KW |
| 924 TURBO | 82 C | 93CN1 00001>09999 | M31.03 | 130 KW |
| 924 (USA)(CDN) | 82 C | 92CN4 50001>59999 | 047.E/F | 85 KW |
| 924 TURBO (USA)(CDN) | 82 C | 93CN1 50001>59999 | M31.04 | 115 KW |
| 924 (J) | 82 C | 92CN4 00001>09999 | 047.E/F | 85 KW |
| 924 TURBO (J) | 82 C | 93CN1 00001>09999 | M31.04 | 115 KW |
| 924 | 83 D | 92DN4 00001>09999 | 047.8/9 | 92 KW |
| 924 TURBO (I) | 83 D | 93DN1 00001>09999 | M31.03 | 130 KW |
| 924 | 84 E | 92EN4 00001>09999 | 047.8/9 | 92 KW |
| 924 TURBO | 84 E | 93EN1 00001>09999 | M31.03 | 130 KW |
| 924 | 85 F | 92FN4 00001>09999 | 047.8/9 | 92 KW |

T

```
EXPLANATION OF THE MOTOR-NUMBERS USED IN THE CATALOGUE
======================================================


DIGIT:                                          1 2   3 4 5 6 7 8

EXAMPLE:                                        X J   0 0 2 1 3 6
                                                ===   ===========
                                                 !         !
ENGINE TYPE-------------------------------------+         !
                                                          !
SERIAL NUMBER-----------------------------------------------+


TURBO
=====

DIGIT:                                          1 2 3 4   5 6 7 8

EXAMPLE:                                        3 1 0 4   0 4 3 5
                                                =======   =======
                                                   !         !
ENGINE TYPE-----------------------------------------+         !
                                                             !
SERIAL NUMBER---------------------------------------------------+
```

| Model | Year | MG | SG | Illustration | VIN No. | Update | 10:23 | 16.08.2004 |
|---|---|---|---|---|---|---|---|---|
| 924 | 85 | 9 | 10 | 910 | | 179 | | |

MR205

| VEHICLE TYPE | ENGINE TYPE | MY | ENGINE-NUMBER | TECHNICAL DATA |
|---|---|---|---|---|
| 924 | 047.8 | 80 A | XK..... | 4ZYL/2,0L/ 92KW |
| 924 | 047.8 | 80 A | XJ..... | 4ZYL/2,0L/ 92KW |
| 924 M249 | 047.9 | 80 A | XK..... | 4ZYL/2,0L/ 92KW |
| 924 M249 | 047.9 | 80 A | XJ..... | 4ZYL/2,0L/ 92KW |
| 924 TURBO | M31.01 | 80 A | 00001>09999 | 4ZYL/2,0L/125KW |
| 924 (USA)(CDN)(J) | 047E | 80 A | VC..... | 4ZYL/2,0L/ 85KW |
| 924 M249 (USA)(CDN)(J) | 047F | 80 A | VC..... | 4ZYL/2,0L/ 85KW |
| 924 TURBO (USA)(CDN)(J) | M31.02 | 80 A | 00001>09999 | 4ZYL/2,0L/110KW |
| 924 | 047.8 | 81 B | XK..... | 4ZYL/2,0L/ 92KW |
| 924 | 047.8 | 81 B | XJ..... | 4ZYL/2,0L/ 92KW |
| 924 M249 | 047.9 | 81 B | XK..... | 4ZYL/2,0L/ 92KW |
| 924 M249 | 047.9 | 81 B | XJ..... | 4ZYL/2,0L/ 92KW |
| 924 TURBO | M31.03 | 81 B | 00001>09999 | 4ZYL/2,0L/130KW |
| 924 CARRERA GT | M31.50 | 81 B | 00001>09999 | 4ZYL/2,0L/154KW |
| 924 (USA)(CDN)(J) | 047.E | 81 B | VC..... | 4ZYL/2,0L/ 85KW |
| 924 M249 (USA)(CDN)(J) | 047.F | 81 B | VC..... | 4ZYL/2,0L/ 85KW |
| 924 TURBO (USA)(CDN)(J) | M31.04 | 81 B | 00001>09999 | 4ZYL/2,0L/115KW |
| 924 | 047.8 | 82 C | XK..... | 4ZYL/2,0L/ 92KW |
| 924 | 047.8 | 82 C | XJ..... | 4ZYL/2,0L/ 92KW |
| 924 M249 | 047.9 | 82 C | XK..... | 4ZYL/2,0L/ 92KW |
| 924 M249 | 047.9 | 82 C | XJ..... | 4ZYL/2,0L/ 92KW |
| 924 TURBO | M31.03 | 82 C | 00001>09999 | 4ZYL/2,0L/130KW |
| 924 (USA)(CDN)(J) | 047.E | 82 C | VC..... | 4ZYL/2,0L/ 85KW |
| 924 (USA)(CDN)(J) | 047.F | 82 C | VC..... | 4ZYL/2,0L/ 85KW |
| 924 TURBO (USA)(CDN)(J) | M31.04 | 82 C | 00001>09999 | 4ZYL/2,0L/115KW |
| 924 | 047.8 | 83 D | XK..... | 4ZYL/2,0L/ 92KW |
| 924 | 047.8 | 83 D | XJ..... | 4ZYL/2,0L/ 92KW |
| 924 M249 | 047.9 | 83 D | XJ..... | 4ZYL/2,0L/ 92KW |
| 924 TURBO (I) | M31.03 | 83 D | 00001>09999 | 4ZYL/2,0L/130KW |
| 924 | 047.8 | 84 E | XK..... | 4ZYL/2,0L/ 92KW |
| 924 | 047.8 | 84 E | XJ..... | 4ZYL/2,0L/ 92KW |
| 924 M249 | 047.9 | 84 E | XJ..... | 4ZYL/2,0L/ 92KW |
| 924 TURBO (I) | M31.03 | 84 E | 00001>09999 | 4ZYL/2,0L/130KW |
| 924 | 047.8 | 85 F | XK..... | 4ZYL/2,0L/ 92KW |
| 924 | 047.8 | 85 F | XJ..... | 4ZYL/2,0L/ 92KW |
| 924 M249 | 047.9 | 85 F | XJ..... | 4ZYL/2,0L/ 92KW |

TR205

```
      EXPLANATION OF THE TRANSMISSION-NUMBERS USED IN THE CATALOGUE
      ==============================================================


      DIGIT:                                    1 2   3 4   5 6   7

      EXAMPLE:                                  M D   1 9   0 2   5
                                                ===   ===   ===   =
                                                 !     !     !    !
                                                 !     !     !    !
      IDENTIFICATION LETTER----------------------+     !     !    !
                                                       !     !    !
      MANUFACTURING DAY--------------------------------+     !    !
                                                             !    !
      MANUFACTURING MONTH------------------------------------+    !
                                                                  !
      MANUFACTURING YEAR-------------------------------------------+


      G31.01/02/03
      ============

      DIGIT:                                     1 2 3 4   5 6 7 8 9  (10 11)

      EXAMPLE:                                   3 1 0 3   0 1 2 9 1  ( 1 2 )
                                                 =======   =========  =======
                                                    !         !          !
      TRANSMISSION VERSION--------------------------+         !          !
                                                              !          !
      SERIAL NUMBER-----------------------------------------------+      !
                                                                         !
      LIMITED SLIP DIFFERENTIAL------------------------------------------+
```

| Model | Year | MG | SG | Illustration | VIN No. | Update | | |
|---|---|---|---|---|---|---|---|---|
| 924 | 85 | 9 | 10 | 910 | | 179 | 10:23 | 16.08.2004 |

GR203

| VEHICLE TYPE | TRANSM. TYPE | MY | TRANSMISSION NO. | TECHNICAL DATA |
|---|---|---|---|---|
| 924 | 016.8 | 80 A | VQ..... | 5-SPEED |
| 924 M249 | 087.3 | 80 A | RK..... | 3-SPEED |
| 924 TURBO | G31.01 | 80 A | 00001>99999 | 5-SPEED |
| 924 (USA)(CDN) | 016.9 | 80 A | UV..... | 5-SPEED |
| 924 M249 (USA)(CDN) | 087.6 | 80 A | RL..... | 3-SPEED |
| 924 TURBO (USA)(CDN) | G31.02 | 80 A | 00001>99999 | 5-SPEED |
| 924 (J) | 016.9 | 80 A | VR..... | 5-SPEED |
| 924 M249 (J) | 087.6 | 80 A | RL..... | 3-SPEED |
| 924 TURBO (J) | G31.02 | 80 A | 00001>99999 | 5-SPEED |
| 924 | 016.8 | 81 B | MD..... | 5-SPEED |
| 924 | 087.3 | 81 B | RK..... | 3-SPEED |
| 924 TURBO | G31.01 | 81 B | 00001>99999 | 5-SPEED |
| 924 CARRERA GT | G31.03 | 81 B | 00001>99999 | 5-SPEED |
| 924 (USA)(CDN) | 016.9 | 81 B | MF..... | 5-SPEED |
| 924 M249 (USA)(CDN) | 087.6 | 81 B | RL..... | 5-SPEED |
| 924 TURBO (USA)(CDN) | 016.G | 81 B | MB..... | 5-SPEED |
| 924 (J) | 016.9 | 81 B | ME..... | 5-SPEED |
| 924 M249 (J) | 087.6 | 81 B | RL..... | 5-SPEED |
| 924 TURBO (J) | 016.G | 81 B | MX..... | 5-SPEED |
| 924 | 016.8 | 82 C | MD..... | 5-SPEED |
| 924 M220 | 016.8 | 82 C | 4Q..... | 5-SPEED |
| 924 M249 | 087.3 | 82 C | RK..... | 3-SPEED |
| 924 TURBO | G31.01 | 82 C | 00001>99999 | 5-SPEED |
| 924 TURBO M220 | G31.01 | 82 C | 00001>99999(12) | 5-SPEED |
| 924 (USA)(CDN) | 016.9 | 82 C | MF..... | 5-SPEED |
| 924 M220 (USA)(CDN) | 016.9 | 82 C | 5Q..... | 5-SPEED |
| 924 M249 (USA)(CDN) | 087.6 | 82 C | RL..... | 3-SPEED |
| 924 TURBO (USA)(CDN) | 016.G | 82 C | MB..... | 5-SPEED |
| 924 TURBO M220 (USA)(CDN) | 016.G | 82 C | 6Q..... | 5-SPEED |
| 924 (J) | 016.9 | 82 C | ME..... | 5-SPEED |
| 924 M220 (J) | 016.9 | 82 C | 5Q..... | 5-SPEED |
| 924 M249 (J) | 087.6 | 82 C | RL..... | 3-SPEED |
| 924 TURBO (J) | 016.G | 82 C | MX..... | 5-SPEED |
| 924 TURBO M220 (J) | 016.G | 82 C | 6Q..... | 5-SPEED |
| 924 | 016.9 | 83 D | MD..... | 5-SPEED |
| 924 M220 | 016.8 | 83 D | 4Q..... | 5-SPEED |
| 924 M249 | 087.3 | 83 D | RCC..... | 3-SPEED |
| 924 TURBO (I) | G31.01 | 83 D | 00001>99999 | 5-SPEED |
| 924 TURBO M220 (I) | G31.01 | 83 D | 00001>99999(12) | 5-SPEED |
| 924 | 016.8 | 84 E | MD..... | 5-SPEED |
| 924 M220 | 016.8 | 84 E | 4Q..... | 5-SPEED |
| 924 M249 | 087.3 | 84 E | RCC..... | 3-SPEED |
| 924 TURBO (I) | G31.01 | 84 E | 00001>99999 | 5-SPEED |
| 924 TURBO M220 (I) | G31.01 | 84 E | 00001>99999(12) | 5-SPEED |
| 924 | 016.8 | 85 F | MD..... | 5-SPEED |
| 924 M220 | 016.8 | 85 F | 4Q..... | 5-SPEED |
| 924 M249 | 087.3 | 85 F | RCC..... | 3-SPEED |

TR201

## LEGENDS AND NOTICES

### IN COLUMN -S- STATUS

| | |
|---|---|
| N | NEW ADDITION |
| P | PART ALREADY IN PROGRAMME, BUT NEW AT THIS APPLICATION |
| W | DELETED AT THIS APPLICATION, BUT CONTINUED TO BE CARRIED |
| A | STOCK TO BE USED UP |
| U | DELETED WITHOUT REPLACEMENT |
| * | PART ALSO OR ONLY AVAILABLE IN REPAIR KIT |
| > | ALSO AVAILABLE IN EXCHANGE |

### IN COLUMN - ILL. -

| | |
|---|---|
| 1 | IDENTIFICATION NO. IN ILLUSTRATION |
| (1) | PART ONLY SIMILAR AS ILLUSTRATED |
| - | PART IS NOT ILLUSTRATED |

FIG.-NUMBERS FOR WHICH THERE IS SHOWN NO TEXT ARE NOT VALID FOR THIS EDITION OF CATALOGUE

### IN COLUMN -PART NUMBER/CODE-

| | |
|---|---|
| 000 000 000 00 | PART NUMBER EQUALS ORDERING NO., IF A CODE IS SHOWN, IT WILL HAVE TO BE PART OF ORDERING NUMBER |
| AC3 | COLOUR CODE |

### IN COLUMN -TEXT

INSTALLATION WIRH ENGINE OR CHASSIS NUMBER-RANGE

| | EXAMPLE: |
|---|---|
| M XJ 001291 >> | FROM ENGINE NO. |
| F >> 92 FN40 01291 | UP TO VIN |

TR201

```
                    IN COLUMN  - A -
                    ----------------

                    IDENTIFICATION LETTER FOR PERIOD OF INSTALLATION
                    THAT IS REPEATED SEVERAL TIMES IN THE CATALOG GROUP.

                    EXPLANATION PLEASE FIND IN TEXT COLUMN OF THE CATALOG GROUP


                    IN COLUMN   - QU -   = NO. OF PIECES
                    ------------------------------------

          1         NUMBER PER APPLICATION

          X         NUMBER AS NEEDED

          *         AVAILABLE ONLY IN RUNNING LENGTHS   1 = 1 METRE


                    IN COLUMN   - MODEL/SYMBOL -
                    ----------------------------

        M650        OPTIONAL EQUIPMENT  -  SEE M-NO. LIST

         -85        LIMITATION OF MODEL YEAR FOR INSTANCE: VALID UP TO
                    END OF MODEL YEAR 1985

        /LL         LHD

        /RL         RHD
                    ---------+
        /V          FRONT    I
                             I
        /H          REAR     I
                             I---> APPLIES TO
        /L          LEFT     I     DIRECTION OF TRAVEL
                             I
        /R          RIGHT    I
                    ---------+

       AUT.         AUTOMATIC

        WW          THE PART CAN BE USED INSTEAD OF THE
                    PRECEDING ONE
```

TR206

## EQUIPMENT BY COUNTRY REGULATIONS

| | |
|---|---|
| (A) | AUSTRIA |
| (AUS) | AUSTRALIA |
| (B) | BELGIUM |
| (CDN) | CANADA |
| (CH) | SWITZERLAND |
| (D) | FEDERAL REPUBLIC OF GERMANY |
| (DK) | DENMARK |
| (E) | SPAIN |
| (F) | FRANCE |
| (GB) | GREAT BRITAIN |
| (GR) | GREECE |
| (HK) | HONGKONG |
| (I) | ITALY |
| (J) | JAPAN |
| (L) | LUXEMBURG |
| (N) | NORWAY |
| (NL) | NETHERLANDS |
| (NS) | NEW ZEALAND |
| (P) | PORTUGAL |
| (RC) | TAIWAN |
| (S) | SWEDEN |
| (SA) | SAUDI ARABIA |
| (SF) | FINLAND |
| (USA) | UNITED STATES OF AMERICA |